REVISIONS			
LTR	**DESCRIPTION**	**DATE**	**APPROVED**
A	Revise drawing, update sources.	29 Sep 2000	Monica Poelking
B	Supplier/address/CAGE change and reformat document	23 May 2002	Thomas M. Hess
C	Update document to current format and editorial changes throughout.	25 July 2013	Thomas M. Hess
D	Update document to current format and editorial changes throughout.	25 July 2020	Muhammad Akbar

CURRENT DESIGN ACTIVITY CAGE CODE 037Z3
DEFENSE LOGISTICS AGENCY
DLA LAND AND MARITIME,
COLUMBUS, OHIO 43218–3990

REV																		
PAGE																		
REV STATUS OF PAGES	**REV**		D	D	D	D	D	D	D	D	D	D	D	D	D	D	D
	PAGE		1	2	3	4	5	6	7	8	9	10	11	12	13	14	15

PMIC N/A	**PREPARED BY** Roger Kissel	**DESIGN ACTIVITY** **DEFENSE ELECTRONICS SUPPLY CENTER, DAYTON, OH 45444−5000**
Original date of drawing 7 August 1990	**CHECKED BY** Alan Barone **APPROVED BY** David E. Moore	**TITLE** **SEMICONDUCTOR DEVICE, POWER SWITCHING, REGULATOR ASSEMBLY**
	SIZE **A** / **CAGE CODE** **14933**	**DWG. NO.** **90025**
	REV **D**	PAGE **1** OF **15**

1. SCOPE

1.1 Scope. This drawing describes the requirements for power switching regulator semiconductor assembly.

1.2 Part or Identifying Number (PIN). The complete PIN shall be as follows:

90025	−XX	TXV
Drawing number	Device type (see 1.2.1)	Quality level (see 1.2.2)

1.2.1 Device type. The device types shall identify the polarity and voltage of the devices as follows:

Device type	Description
01	15 A, 60 V, positive
02	15 A, 80 V, positive
03	15 A, 100 V, positive
04	15 A, 60 V, negative
05	15 A, 80 V, negative
06	15 A, 100 V, negative

1.2.2 Quality level. The TX and TXV suffix relates to the JANTX and JANTXV quality level requirements of MIL-PRF-19500.

1.2.3 Package outline. The device package outline is a diamond base flange mount (similar to TO-66) in accordance with figure 1 for all device types.

1.3 Maximum ratings. Unless otherwise specified, T_C = +25°C.

Type	V 4-1 (input voltage)	V 1-2 (output voltage)	V 3-4 (Drive input reverse voltage)	I 1 (1) (continuous output current)	I 3 (drive current)	$R_{\theta JC}$	$R_{\theta CA}$	T_J	T_{STG}
	V	V	V	A	A	°C/W	°C/W	°C	°C
01	60	60	5	15	-0.4	4	60	-55 to +125	-65 to +150
02	80	80	5	15	-0.4	4	60	-55 to +125	-65 to +150
03	100	100	5	15	-0.4	4	60	-55 to +125	-65 to +150
04	-60	-60	-5	-15	0.4	4	60	-55 to +125	-65 to +150
05	-80	-80	-5	-15	0.4	4	60	-55 to +125	-65 to +150
06	-100	-100	-5	-15	0.4	4	60	-55 to +125	-65 to +150

(1) Applies to T_C = +25°C, derate 1 percent for each °C above T_C of +25°C.

1.4 Primary electrical characteristics. See table II, group A inspection, for the primary electrical characteristics.

2. APPLICABLE DOCUMENTS

2.1 General. The documents listed in this section are specified in sections 3 and 4 of this specification. This section does not include documents cited in other sections of this specification or recommended for additional information or as examples. While every effort has been made to ensure the completeness of this list, document users are cautioned that they must meet all specified requirements of documents cited in sections 3 and 4 of this specification, whether or not they are listed.

2.2 Government documents.

2.2.1 Specifications, standards, and handbooks. The following specifications, standards, and handbooks form a part of this document to the extent specified herein. Unless otherwise specified, the issues of these documents are those cited in the solicitation or contract (see 6.2).

SPECIFICATIONS

DEPARTMENT OF DEFENSE SPECIFICATIONS

MIL-PRF-19500 – Semiconductor Devices, General Specification for.

STANDARDS

DEPARTMENT OF DEFENSE STANDARDS

MIL-STD-750 – Test Methods for Semiconductor Devices.

(Copies of these documents are available online at https://quicksearch.dla.mil.)

2.3 Order of precedence. Unless otherwise noted herein or in the contract, in the event of a conflict between the text of this document and the references cited herein, the text of this document takes precedence. Nothing in this document, however, supersedes applicable laws and regulations unless a specific exemption has been obtained.

3. REQUIREMENTS

3.1 General. All semiconductor devices described herein shall meet all requirements of MIL-PRF-19500 as specified herein except qualification is not required for these devices.

3.1.1 Manufacturer eligibility. To be eligible to supply devices to this drawing, the manufacturer shall have an approved facility in accordance with MIL-PRF-19500 for at least one line. In addition, all devices specified herein shall meet all requirements of MIL-PRF-19500 except qualification requirements.

3.1.2 Submission of certificate of compliance. A certificate of compliance shall be required from a manufacturer in order to be listed as an approved source of supply in 6.4. The certificate of compliance submitted to DLA Land and Maritime VAC, prior to listing as an approved source of supply in 6.4, shall state that the manufacturer's product meets the requirements of MIL-PRF-19500 and the requirements herein.

3.2 Certificate of conformance. A certificate of conformance shall be provided with each lot of devices delivered in accordance with this drawing.

3.3 Abbreviations, symbols, and definitions. Abbreviations, symbols, and definitions used herein shall be as specified in MIL-PRF-19500 and as follows:

V 4-1 – The voltage measured between terminal 4 and terminal 1 of the device.
V 1-2 – The voltage measured between terminal 1 and terminal 2 of the device.
V 3-4 – The voltage measured between terminal 3 and terminal 4 of the device.
I 1 – The amount of current flow out of terminal 1.
I 3 – The amount of current flow into terminal 3.
V 4-1(on) – The voltage measured from terminal 4 to terminal 1 while the power switch is in the on-state.
V 2-1(on) – The voltage measured from terminal 2 to terminal 1 while the diode is in the on-state.
I 4-1 – The leakage current measured flowing from terminal 4 to terminal 1 while the power switch is in the off-state.
I 1-2 – The leakage current measured flowing from terminal 1 to terminal 2 while the diode is in the off-state.

3.4 Interface and physical dimensions. The interface and physical dimensions shall be as specified in MIL-PRF-19500, and on figure 1 herein.

3.4.1 Lead material and finish. Unless otherwise specified, lead finish shall be solderable as defined in MIL-PRF-19500.

3.4.2 Internal construction. Multiple chip construction shall be permitted.

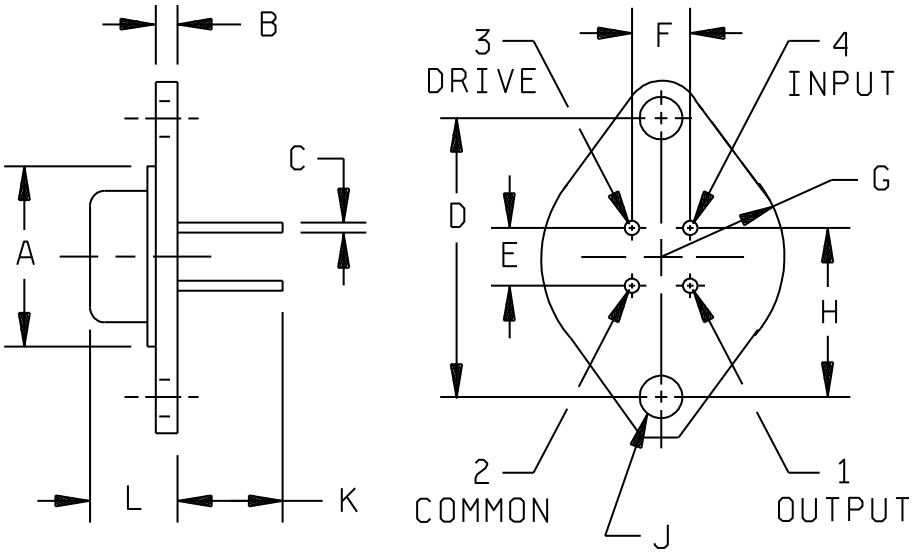

Dimensions (see notes)									
LTR	Inches		Millimeters		LTR	Inches		Millimeters	
	Min	Max	Min	Max		Min	Max	Min	Max
A	---	.620	---	15.75	G	---	.350	---	8.89
B	.050	.075	1.27	1.90	H	.570	.590	14.48	14.99
C	.028	.034	0.71	0.86	J	.142	.152	3.61	3.86
D	.958	.962	24.33	24.43	K	.360	---	9.14	---
E	.190	.210	4.83	5.33	L	.250	.340	6.35	8.64
F	.190	.210	4.83	5.33					

NOTES:
1. Dimensions are in inches. Metric equivalents are given for general information only.
2. Case is electrically isolated.
3. Leads may be soldered to within .062 inch (1.57 mm) of base provided temperature-time exposure is < +260°C for 10 seconds.
4. Case outline is TO-213AA (similar to TO-66).

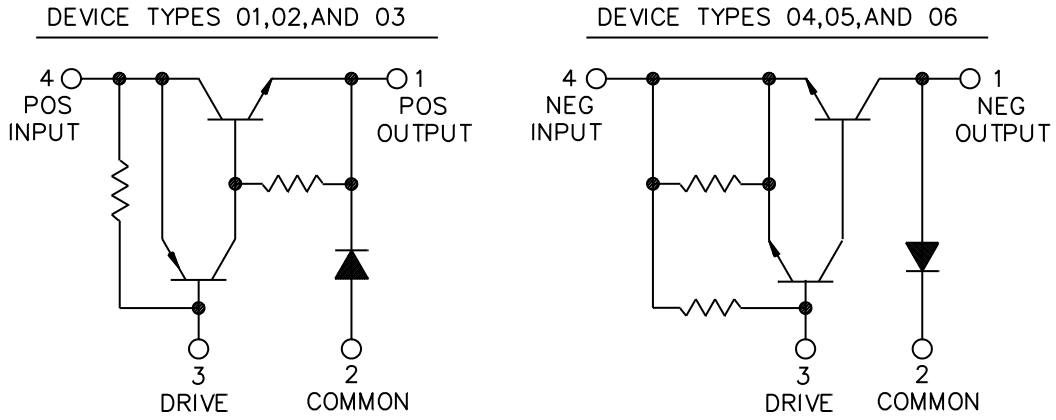

FIGURE 1. Dimensions, configurations, and schematics.

3.5 Marking. Marking shall be in accordance with MIL-PRF-19500. The full PIN (see 1.2) shall consist of this drawing number, the dash number and the quality level indicator.

3.6 Recycled, recovered, or environmentally preferable materials. Recycled, recovered, or environmentally preferable materials should be used to the maximum extent possible provided that the material meets or exceeds the operational and maintenance requirements, and promotes economically advantageous life cycle costs.

3.7 Workmanship. The semiconductor shall be uniform in quality and free from any defects that will affect life, serviceability or appearance.

4. VERIFICATION

4.1 Sampling and inspection. Unless otherwise specified, sampling and inspection procedures shall be performed in accordance with MIL-PRF-19500, and as specified herein.

4.2 Screening. All devices shall be screened in accordance with MIL-PRF-19500 (table E-IV requirements) and as specified herein. Devices that exceed the limits of table I, herein, shall not be acceptable.

Screen	Measurement
	TX and TXV levels
1	Method 2072 of MIL-STD-750, (TXV types only)
2	Method 1032 of MIL-STD-750
3	Method 1051 of MIL-STD-750, condition F, t_{low} = -55°C, $t_{extreme}$ ≥ 15 minutes, no dwell at +25°C, 10 cycles
4	Method 2006 of MIL-STD-750, 10,000 G, Y1 orientation, 1 minute hold time does not apply
5	Method 2052 of MIL-STD-750, condition A, not required for junction coated devices
7	Method 1071 of MIL-STD-750
10	Method 1039 of MIL-STD-750, condition A, t = 48 hours, T_A = +125°C (see figure 2 for circuit and conditions)
11	See table I for the appropriate dash number (omit deltas)
12	Method 1039 of MIL-STD-750, condition B, T_A = +25°C, (see figure 3 for the circuit and conditions for the applicable dash number)
13	See table I for the appropriate dash number and group A, subgroup 2 of table II herein

4.3 Conformance inspection. Conformance inspection shall be in accordance with MIL-PRF-19500 and as specified herein.

4.3.1 Group A inspection. Group A inspection shall consist of the inspections and tests specified in table II. End-point electrical measurements shall be in accordance with table I herein.

4.3.2 Group B inspection. Group B inspection shall be conducted in accordance with the conditions specified for subgroup testing in table E-VIB of MIL-PRF-19500, and table III herein. End-point electrical measurements shall be in accordance with table I herein.

4.3.3 Group C inspection. Group C inspection shall be conducted in accordance with the conditions for subgroup testing in table E-VII of MIL-PRF-19500, and table IV herein. End-point electrical measurements shall be in accordance with the applicable steps of table I herein.

4.3.4 Group E inspection. Group E inspection shall be conducted in accordance with the conditions for subgroup testing in table V herein. End-point electrical measurements shall be in accordance with table I herein.

4.4 Methods of inspection. Methods of inspection shall be as specified in MIL-PRF-19500 and as specified herein.

TABLE I. Screening and groups B and C end-point electrical measurements.

Inspection and dash number	Conditions 1/	Limits		Delta limits 2/	Units
		Minimum	Maximum		
V 4-1 (on)	Method I 4 = 7 A, I3 = -.03 A I 4 = -7 A, I3 = .03 A		 1.5 -1.5	 ±0.3 ±0.3	 V V
ΔV 2-1 (on) -01, -02, -03 -04, -05, -06	 I 2 = 7 A I 2 = -7 A		 1.25 -1.25	 ±0.3 ±0.3	 V V
I 4-1 All types	V 4-1 = rated input voltage (see 1.3)		10	±1 or 100% whichever is greater	μA
I 1-2 All types	V 1-2 = rated output voltage (see 1.3)		10	±2 or 100% whichever is greater	μA

1/ All tests at T_C = +25°C unless noted.
2/ Not required for groups B and C.

TABLE II. Group A inspection.

Inspection and dash number 1/	MIL-STD-750		Limits		Units
	Method	Conditions	Min	Max	
Subgroup 1 Visual and mechanical examination	 2071				
Subgroup 2		T_C = +25°C			
V 4-1 (on) -01, -02, -03 -04, -05, -06	3071	Pulsed I4 = 7 A, I3 = -03 A I4 = -7 A, I3 = .03 A		 1.5 -1.5	 V V
-01, -02, -03 -04, -05, -06		I4 = 15 A, I3 = -03A I4 = -15 A, I3 = .03 A		3.5 -3.5	V V
V 2-1 (on) -01, -02, -03 -04, -05, -06	4011	Condition B, pulsed I2 = 7 A I2 = -7 A		 1.25 -1.25	 V V
-01, -02, -03 -04, -05, -06		I2 = 15 A I2 = -15 A		1.75 -1.75	V V

See footnote at end of table.

TABLE II. Group A inspection − Continued.

Inspection and dash number 1/	MIL-STD-750		Limits		Units
	Method	Conditions	Min	Max	
Subgroup 2 − continued					
I 4-1 All types	3041	Pulsed V 4-1 = rated input voltage (see 1.3)		10	µA
I 1-2 All types	4016	Condition A or B, pulsed V 1-2 = rated output voltage (see 1.3)		10	µA
Subgroup 3					
High temperature operation:		T_C = +100°C			
I 4-1 All types	3041	Pulsed V 4-1 = rated input voltage (see 1.3)		1.0	mA
I 1-2 All types	4016	Condition A or B, pulsed V 1-2 = rated output voltage (see 1.3)		1.0	mA
Low temperature operation:		T_C = -55°C			
V 4-1 (on) -01, -02, -03 -04, -05, -06	4011	Condition B, pulsed I 4 = 7 A, I3 = -03 A I 4 = -7 A, I3 = .03 A		 2.0 -2.0	 V V
Subgroup 4 (switching tests)		T_C = +25°C			
Current delay time (tdi) -01, -02, -03 -04, -05, -06	3251	See figure 4		 60 60	 ns ns
Current rise time (tri) -01, -02, -03 -04, -05, -06	3251	See figure 4		 150 175	 ns ns
Voltage rise time (trv) -01, -02, -03 -04, -05, -06	3251	See figure 4		 60 60	 ns ns
Voltage storage time (tsv) -01, -02, -03 -04, -05, -06	3251	See figure 4		 1300 1300	 ns ns
Voltage fall time (tfv) -01, -02, -03 -04, -05, -06	3251	See figure 4		 175 300	 ns ns
Current fall time (tfi) -01, -02, -03 -04, -05, -06	3251	See figure 4		 300 300	 ns ns

See footnote at end of table.

TABLE II. Group A inspection − Continued.

Inspection and dash number 1/	MIL-STD-750		Limits		Units
	Method	Conditions	Min	Max	
Subgroup 5		T_C = +25°C			
Reverse bias clamped inductive test All types	3053	t = 1 second, see figure 5			
End-point electrical measurements		See table I (omit deltas)			

1/ For sampling plan, see MIL-PRF-19500.

TABLE III. Group B inspection.

Inspection 1/	MIL-STD-750	
	Method	Conditions
Subgroup 1		
Solderability	2026	
Resistance to solvents	1022	
Subgroup 2		
Temperature cycling (air to air)	1051	No dwell time is required at +25°C, test condition C, except T = -55°C to +150°C, (45 cycles including screening), $t_{extreme}$ > 10 minutes.
Hermetic seal	1071	Fine and gross leak.
End-point electrical measurements		See table I (omit deltas)
Subgroup 3		
Steady-state operational life	1027	340 hours minimum, circuit and conditions as specified on figure 3, T_A = +25°C
End-point electrical measurements		See table I (omit deltas)
Subgroup 4		
De-cap internal visual (design verification)	2075	Visual criteria in accordance with qualified design.
Bond strength	2037	The sample shall be a minimum of 3 devices and shall include all wire sizes.
Subgroup 5		
Thermal resistance	4081	$R_{\theta JC}$ of the diode (4°C/W max)
Subgroup 6		
High-temperature (non-operating) life	1032	340 hours minimum, T_A = +150°C
End-point electrical measurements		See table I (omit deltas)

1/ For sampling plan, see MIL-PRF-19500.

TABLE IV. Group C inspection.

Inspection 1/	MIL-STD-750	
	Method	Conditions
Subgroup 1		
Physical dimensions	2066	Dimensions as specified on figure 1
Subgroup 2		
Thermal shock (liquid to liquid)	1056	Test condition B
Terminal strength	2036	Test condition A, weight = 3 pounds (1.36 Kg), time = 15 s
Hermetic seal	1071	Fine and gross leak
Moisture resistance	1021	Omit initial conditioning
End-point electrical measurements		See table I (omit deltas)
Subgroup 3		
Shock	2016	Non-operating, 1500 G's, 0.5 ms, 5 blows in each orientation (X1, Y1, Z1)
Vibration variable frequency	2056	
Constant acceleration	2006	1 minute in each orientation, X1, Y1 at 10,000 G minimum
End-point electrical measurements		See table I (omit deltas)
Subgroup 4		
Salt atmosphere (corrosion)	1041	
Subgroup 5		
Not applicable		
Subgroup 6		
Steady-state operational life	1026	1000 hours, circuit and conditions as specified on figure 3, T_A = +25°C
End-point electrical measurements		See table I (omit deltas)

1/ For sampling plan, see MIL-PRF-19500.

TABLE V. Group E inspection for initial design verification.

Inspection	MIL-STD-750		Sample plan
	Method	Conditions	
Subgroup 1			22 devices c = 0
Temperature cycling (air to air)	1051	No dwell time is required at +25°C, test condition C, except T = -55°C to +150°C, (1000 cycles including screening), $t_{extreme}$ > 10 minutes	
Hermetic seal	1071	Fine and gross leak	
End-points electrical measurements		See table I (omit deltas)	
Subgroup 2			22 devices c = 0
Steady-state dc blocking life	1027	1,000 hours, circuit and conditions as specified on figure 2, T_A = +125°C	
End-points electrical measurements		See table I (omit deltas)	
Subgroup 3			3 devices c = 0
Destructive physical analysis		Visual criteria in accordance with design	
Subgroups 4, 5, and 6			
Not applicable			

DEVICE TYPES 01,02, AND 03

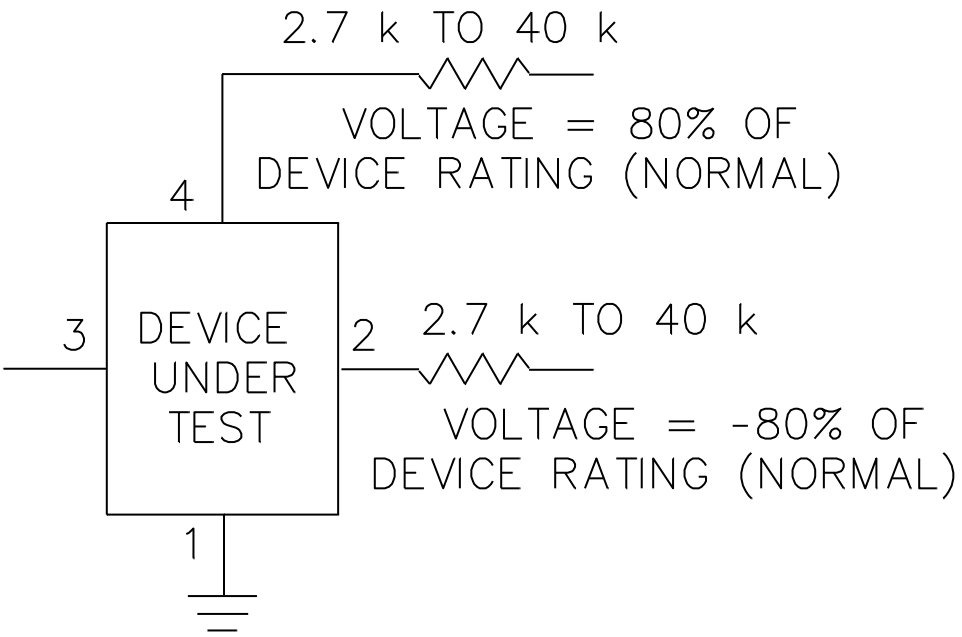

NOTE: Test circuits and conditions for -04, -05, and -06 are identical but of opposite polarity.

FIGURE 2. High temperature reverse bias circuit.

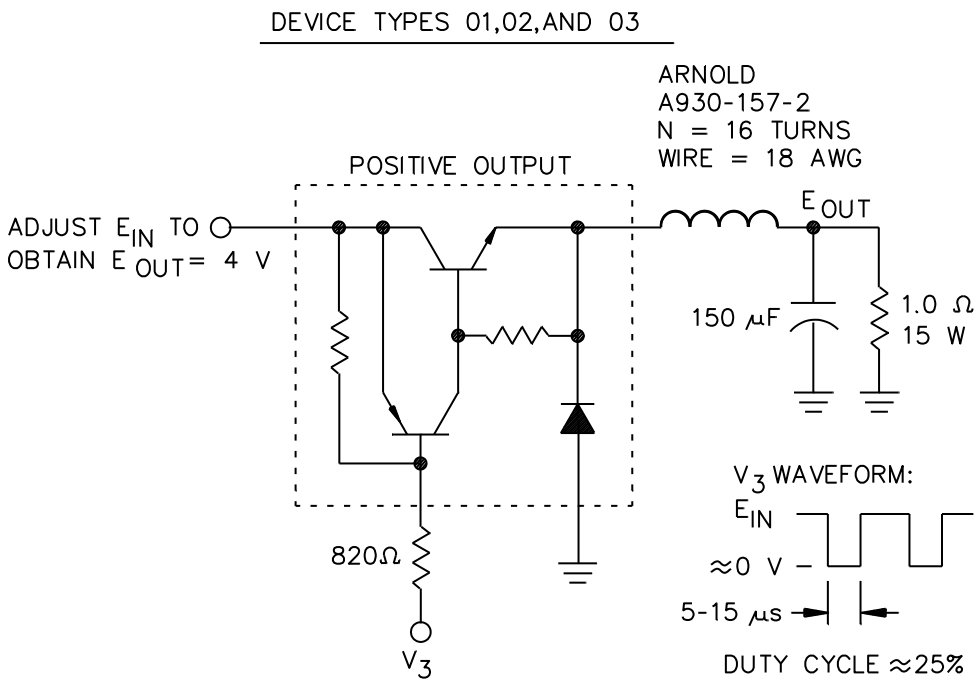

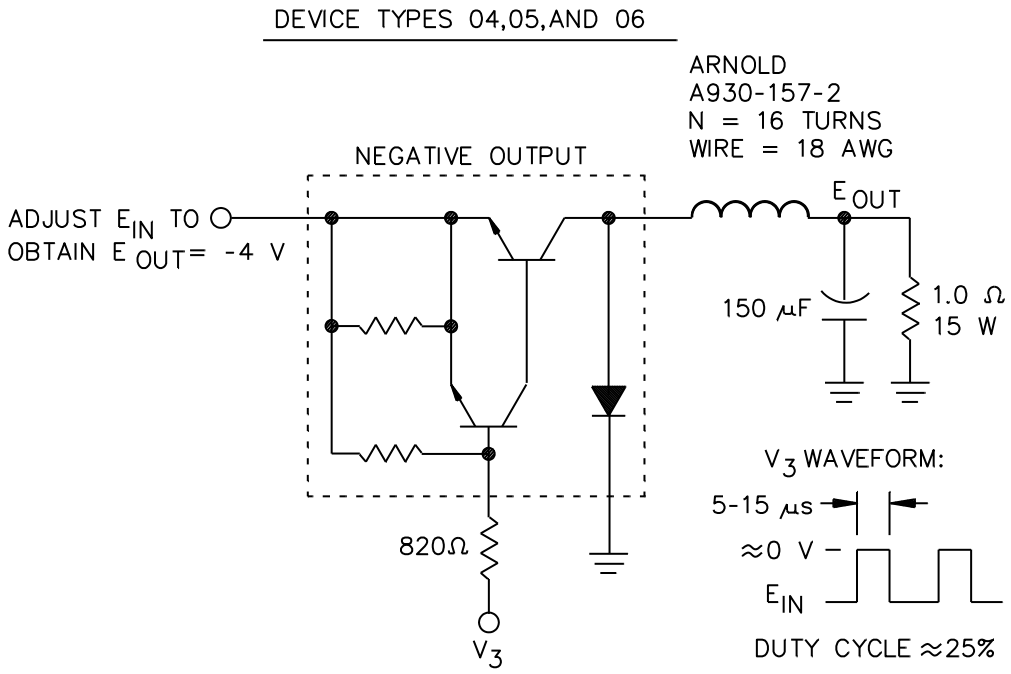

NOTE: No heat sink allowed. T_A must be controlled to prevent thermal runaway.

FIGURE 3. Burn-in circuit.

DEVICE TYPES 01,02,AND 03

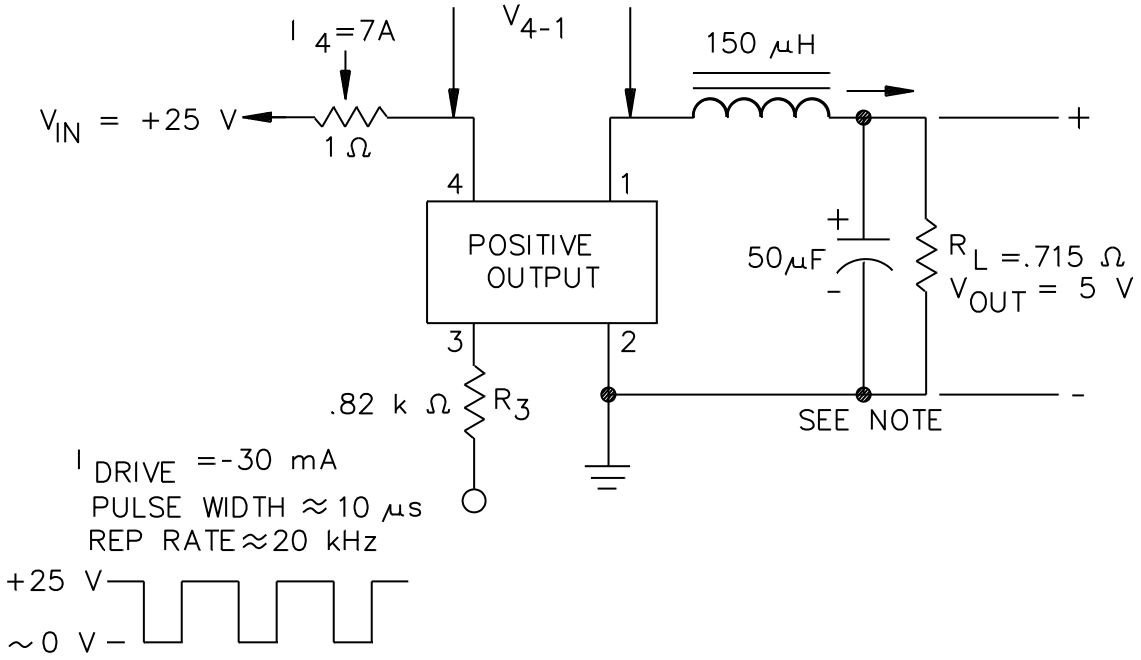

NOTE: Test circuit and conditions for -04, -05, and -06 are identical but of opposite polarity V_{IN} = -25 V, V_{OUT} = -5 V.

FIGURE 4. Switching speed circuit.

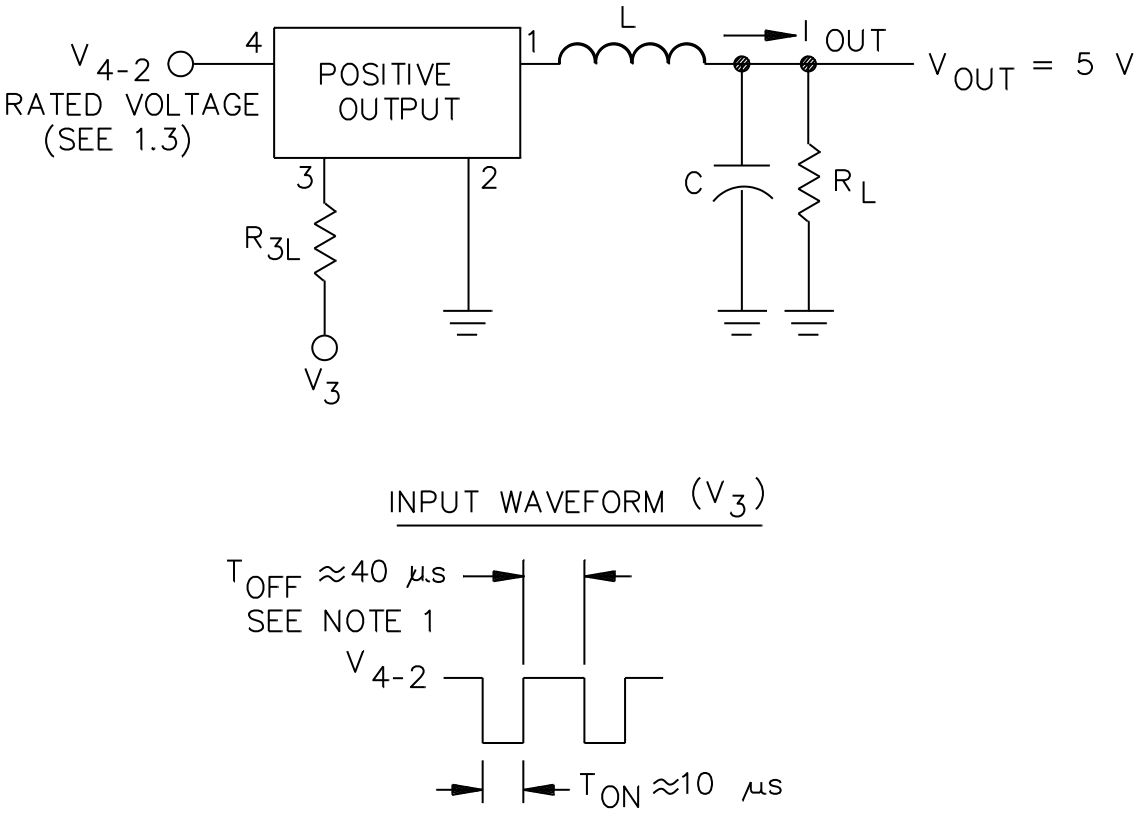

NOTES:
1. Adjust T_{ON} to obtain specified I_{OUT}.
2. Negative output test circuits and waveforms are identical but have opposite polarity.

Component values					
Dash numbers	R_{3L} Ω	L µH	C µF	R_L Ω	I_{OUT} A
-01, -04	2000	150	100	1.0	5
-02, -05	2700	150	100	1.0	5
-03, -06	3300	150	100	1.0	5

FIGURE 5. Reverse bias clamped inductive test circuit and conditions.

5. PACKAGING

5.1 Packaging. For acquisition purposes, the packaging requirements shall be as specified in the contract or order (see 6.2). When packaging of materiel is to be performed by DoD or in-house contractor personnel, these personnel need to contact the responsible packaging activity to ascertain packaging requirements. Packaging requirements are maintained by the Inventory Control Point's packaging activities within the Military Service or Defense Agency, or within the military service's system commands. Packaging data retrieval is available from the managing Military Department's or Defense Agency's automated packaging files, CD–ROM products, or by contacting the responsible packaging activity.

6. NOTES

(This section contains information of a general or explanatory nature which may be helpful, but is not mandatory.)

6.1 Intended use. Power switching regulator assemblies conforming to this drawing are intended for use when military specifications do not exist and qualified military devices that will perform the required function are not available for the OEM application. This drawing is intended exclusively to prevent the proliferation of unnecessary duplicate specifications, drawings, and stock catalog listings. When a military specification exists and the product covered by this drawing has been qualified for listing on QML-19500, this drawing will be inactivated and will not be used for new design. The QML-19500 product shall be the preferred item for all applications.

6.2 Acquisition requirements. The acquisition requirements should specify the following:

a. Complete PIN (see 1.2).

b. Requirements for delivery of one copy of the conformance inspection data or certificate of compliance that parts have passed conformance inspection with each shipment of parts by the manufacturer.

c. Requirements for packaging and packing.

6.3 Users of record. Coordination of this document for future revisions are coordinated only with the approved sources of supply and the users of record of this document. Requests to be added as a recorded user of this drawing may be achieved by electronic mail at Semiconductor@dla.mil or by facsimile (614) 693−1642 or DSN 850-6939 or in writing to: DLA Land and Maritime, ATTN: VAC, Post Office Box 3990, Columbus, OH 43218−3990.

6.4 Approved sources of supply. An approved source of supply is listed herein. Additional sources will be added as they become available. The vendor listed herein has agreed with this drawing and have submitted a certificate of compliance (see 3.1.2 herein) to DLA Land and Maritime, ATTN: VAC, P.O. Box 3990, Columbus, OH 43218−3990 or emailed to Semiconductor@dla.mil.

DESC drawing PIN (1)	Vendor similar designation or type number	Vendor CAGE	Vendor name and address
90025-01TX, TXV 90025-02TX, TXV 90025-03TX, TXV 90025-04TX, TXV 90025-05TX, TXV 90025-06TX, TXV	PIC625 PIC626 PIC627 PIC635 PIC636 PIC637	43611 43611 43611 43611 43611 43611	Microsemi – Lawrence 6 Lake Street Lawrence, MA 01841−3011 Phone number: (978) 620−2600 Facsimile: (978) 689−0803 URL: https://www.microsemi.com

(1) Parts must be purchased to this DESC PIN to assure that all performance requirements and tests are met.