INCH-POUND

W-C-596/84B
7 December 2001
SUPERSEDING
W-C-596/84A
10 May 1990

FEDERAL SPECIFICATION SHEET

CONNECTOR, RECEPTACLE, ELECTRICAL, MALE INLET, SPECIAL PURPOSE, LOCKING, GROUNDING, 2 POLE, 3 WIRE, 20 AMPERES, 250 VOLTS, 50/60 HERTZ

The General Services Administration has authorized the use of this federal specification sheet by all federal agencies.

The complete requirements for procuring the connectors described herein shall consist of this document and the latest issue of W-C-596/GEN.

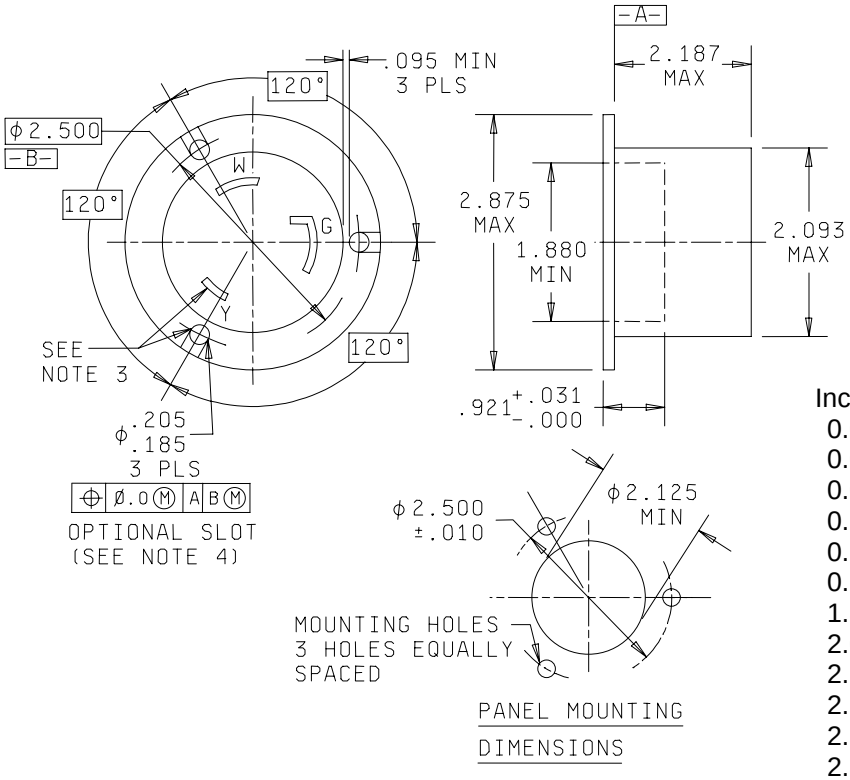

Inches	mm
0.010	0.25
0.031	0.79
0.095	2.41
0.187	3.96
0.205	5.21
0.921	23.39
1.880	47.75
2.093	53.16
2.125	53.98
2.187	55.55
2.500	63.50
2.875	73.03

NOTES:
1. Dimensions are in inches.
2. Metric equivalents are given for general information only.
3. Angular relation of mounting holes to contact location may be other than as shown.
4. See optional three slot mounting configuration of W-C-596/GEN.
5. Undimensioned pictorials are for reference purposes only.

FIGURE 1. Configuration and dimensions.

DISTRIBUTION STATEMENT A. Approved for public release; distribution is unlimited.

REQUIREMENTS:

Design and configuration: See figure 1.

Dimensions: Shall conform to NEMA WD 6, configuration L6-20P.

Ratings:
Voltage: 250 volts.
Current: 20 amperes.
Frequency: 50/60 hertz.

Mating connector: W-C-596/83.

Part or Identifying Number (PIN): WC596/84- (dash number from table I).

Supersession and cross reference: See table II.

TABLE I. Dash number.

Dash no.	Supersedes style	Description
1		Main inlet

TABLE II. Supersession and cross reference.

Active Government PIN	Superseded numbers		
	CAGE 2/ 74545	CAGE 04009	CAGE 81091
WC596/84-1	2325	6215	L620-FI

1/ Caution. Do not use this number for item acquisition. Items acquired to this number may not satisfy the performance requirements of this drawing.
2/ CAGE is the Commercial and Government Entity code which is assigned and maintained by Defense Logistics Information Service (DLIS) in Battle Creek, MI.

MILITARY INTERESTS:

Custodians:
Army - CR
Navy - YD
Air Force - 11
DLA - CC

Review Activities:
Army - AR, AV, CR4, MI
Navy - AS, EC, MC, SH
Air Force - 19, 99

CIVIL AGENCY COORDINATING ACTIVITIES:

DCGOVT - DCG
DOT - ACO
GSA - 7FXE
HHS - FEC
USDA - AFS

Preparing Activity:
DLA - CC

(Project 5935-4305-82)