INCH-POUND

MIL-STD-220C
14 May 2009
SUPERSEDING
MIL-STD-220B
24 January 2000

DEPARTMENT OF DEFENSE

TEST METHOD STANDARD

METHOD OF INSERTION LOSS MEASUREMENT

AMSC N/A

FSC EMCS

FOREWORD

1. This standard is approved for use by all Departments and Agencies of the Department of Defense.

2. This standard specifies a method of measuring the filtering capabilities of passive, low-pass, electromagnetic interference (EMI)/radio-frequency interference (RFI) filters as a function of frequency and considering the influence of temperature and direct current bias. This measurement is known as insertion loss (IL).

3. Filters measured by this method are typically feed-through types, having the live conductor(s) passing through the filter providing both input and output terminals protruding from and insulated from the case which acts as the ground terminal. These filters typically contain capacitors only or capacitors and inductors, and may also contain resistors or diodes. The filters measured to this standard are normally designed for bulkhead mounting, where the input and output terminals are completely isolated from each other by the bulkhead.

4. The test methods in this standard are intended to provide data for quality control during quantity production of filters. The test methods specified with 50 ohm input and output terminations are satisfactory for this purpose; but do not represent conditions that exist in actual circuits or installations. In general, there is little correlation between the MIL-STD-220 quality control tests and the performance of a filter in a particular application. This is because power line filters are normally used under conditions where the power source and load impedances are independent of each other and can vary widely as a function of frequency. In addition, the power source impedance varies from line to line in general practice.

5. Beneficial comments (recommendations, additions, deletions) and any pertinent data which may be of use in improving this document should be addressed to: Defense Supply Center Columbus, Attn: DSCC-VAT, Post Office Box 3990, Columbus, OH 43218-3990, or emailed to capacitorfilter@dscc.dla.mil. Since contact information can change, you may want to verify the currency of this address information using the ASSIST online database at http://assist.daps.dla.mil.

CONTENTS

PARAGRAPH		PAGE
	FOREWORD	ii
1.	SCOPE	1
1.1	Scope	1
2.	APPLICABLE DOCUMENTS	1
2.1	General	1
2.2	Government documents	1
2.2.1	Specifications, standards, and handbooks	1
2.3	Order of precedence	1
3.	DEFINITIONS	2
3.1	Insertion loss	2
4.	GENERAL REQUIREMENTS	3
4.1	Test setup	3
4.1.1	Shielding test	3
4.2	Test equipment	3
4.2.1	Output signal	3
4.2.1.1	Measuring a filter	3
4.2.1.2	Error correction for accurate passband measurements	3
4.2.1.3	Sources and types of errors	5
4.2.2	Coaxial lines, connectors, and switches	5
4.2.3	Isolation attenuators	5
4.2.4	RF-dc insertion loss measuring equipment assembly	5
4.2.5	Standard attenuator	5
5.	METHOD OF TEST	8
5.1	Test conditions	8
5.2	Test procedure	8
5.2.1	Preliminary operation	8
5.2.2	Method of measurement	8
6.	NOTES	9
6.1	Intended use	9
6.2	Subject term (key word) listing	9
6.3	Changes from previous issue	9
	APPENDIX A - Analysis of Filter Measurements	10
A.1	Discussion	10
A.1.1	Elements	10
A.1.2	Details	10
A.2	Test condition	11

CONTENTS - Continued

FIGURE		PAGE
1.	Basic test circuit ……	4
2.	Measuring Filter Insertion Loss ……..	6
3.	Insertion loss good ground and good connection to test fixture ……	7
A-1.	Insertion loss good filter and shell ground ……..…….	11
A-2	Insertion loss poor filter ground to shell ……	12
A-3	Insertion loss poor filter and fixture ground ……..	13

1. SCOPE

1.1 Scope. This standard covers a method of measuring, in a 50 ohm system, the insertion loss of feed-through suppression capacitors, and of single and multiple circuit radio frequency (RF) filters at frequencies up to 10 gigahertz (GHz).

2. APPLICABLE DOCUMENTS

2.1 General. The documents listed in this section are specified in sections 3, 4, and 5 of this standard. This section does not include documents cited in other sections of this standard or recommended for additional information or as examples. While every effort has been made to ensure the completeness of this list, document users are cautioned that they must meet all specified requirements documents cited in sections 3, 4, and 5 of this standard, whether or not they are listed.

2.2 Government documents.

2.2.1 Specifications, standards, and handbooks. The following specifications, standards, and handbooks form a part of this document to the extent specified herein. Unless otherwise specified, the issues of these documents are those listed in the solicitation or contract.

DEPARTMENT OF DEFENSE SPECIFICATIONS

MIL-DTL-17 - Cables, Radio Frequency, Flexible and Semi-rigid, General Specification For.
MIL-PRF-39012 - Connectors, Coaxial, Radio Frequency, General Specification For.

(Copes of these documents are available online at http://assist.daps.dla.mil/quicksearch/ or from the Standardization Document Order Desk, 700 Robbins Avenue, Building 4D, Philadelphia, PA 19111-5094.)

2.3 Order of precedence. Unless otherwise noted herein or in the contract, in the event of a conflict between the text of this document and the references cited herein, the text of this document takes precedence. Nothing in this document, however, supersedes applicable laws and regulations unless a specific exemption has been obtained.

3. DEFINITIONS

3.1 Insertion loss. At a given frequency, the insertion loss of a feed through suppression capacitor or a filter connected into a given transmission system is defined as the ratio of voltages appearing across the line immediately beyond the point of insertion, before and after insertion. As measured herein, insertion loss is represented as the ratio of input voltage required to obtain constant output voltage, with and without the component, in the specified 50 ohm system. This ratio is expressed in decibels (dB) as follows:

$$\text{Insertion loss} = 20 \log \frac{E_1}{E_2}$$

Where:

E_1 = The output voltage of the network/spectrum analyzer with the component in the circuit.
E_2 = The output voltage of the network/spectrum analyzer with the component not in the circuit.

When testing is conducted with a network/spectrum analyzer, the equipment usually maintains a constant output voltage and can be set to record the output to input voltage ratio in decibels.

NOTE: The network/spectrum analyzer will provide a direct reading of loss. There is no need to do any conversion of voltage readings.

4. GENERAL REQUIREMENTS

4.1 Test setup (no load). The test circuit shall be arranged as shown on figure 1 using a network or spectrum analyzer. The test setup shall be capable of indicating a repeatable insertion loss within ±1.0 dB over the required frequency range. All test equipment shall be well shielded, and shall be filtered to the extent that leakage, either conducted or radiated, shall not affect the output level and sensitivity, respectively, needed to make the required maximum insertion loss measurement, see section 5 (method of test) for details.

4.1.1 Test setup (with load): To measure the insertion loss of a filter under conditions of load, current, or voltage, the DUT shall be isolated from the network analyzer with the use of dc blocking capacitors. A pair of appropriate LC networks will be connected to the DUT to inject the dc current or dc voltage into the filter. Normalization of the instrument, with the dc load applied will be completed through the frequency range of interest prior to making any measurements.

Caution: The direct current (dc) source used in making insertion loss measurements with full load applied shall be a floating dc source and shall not be connected to ground.

4.1.2 Shielding test. Set up the equipment for the filter out condition of insertion loss measurement (see 5.2.2). The test setup shall then be connected for the filter in condition by substituting for the component, a solid brass or copper plate at least .25 inch thick (6.35 mm) with plane faces at least 2.38 inches (60.45 mm) wide in all directions. This plate shall be placed across the coupler and center conductor of the measuring equipment assembly so that the signal source and load are completely short circuited by the faces of the plate. The insertion loss shall be at least 80 dB greater than the insertion loss to be measured.

4.2 Test equipment.

4.2.1 Output signal. Any instrument selected for measurement shall be capable of maintaining an output signal that is within ±1 percent of nominal over a 2 minute period.

4.2.1.1 Measuring a filter. Complete characterization of filters is typically achieved with sweep-frequency measurements. The most commonly measured filter characteristics are insertion loss and bandwidth. Another common measured parameter is out-of-band rejection. This is a measure of how well a filter passes signals within its bandwidth while simultaneously rejecting signals well outside that same bandwidth.

4.2.1.2 Error correction for accurate passband measurements. Variation from a constant amplitude response within the filters bandwidth results in signal distortion. Error correction is often essential for accurate measurements of filter pass bands. When a filters pass band is measured with a network analyzer without calibration, the response may vary considerably, depending on the network analyzer and test cables used.

When the same filter is evaluated after doing a response calibration (normalization), the test systems transmission-tracking frequency-response error is removed from the measured response, resulting in a much narrower amplitude-distortion window.

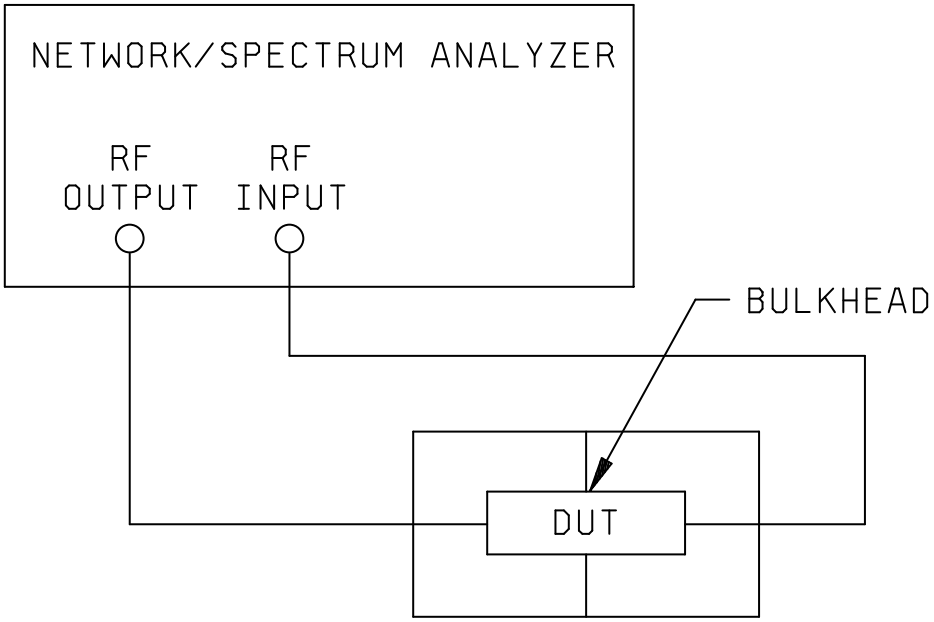

FIGURE 1. Basic test circuit.

NOTE: All cables are 50 ohm double shielded. The cables are suitable for the application and terminated in SMA (subminiature version A connector) style connectors.

4.1.2.3 Sources and types of errors.

a. Systemic errors Systemic errors are caused by imperfections in the test equipment and test setup. If these errors do not vary over time, they can be characterized through calibration and mathematically removed during the measurement process.

b. Random errors. Random errors vary as a function of time. Since they are not predictable, they cannot be removed by calibration.

c. Drift errors Drift errors occur when a test systems performance changes after a calibration has been performed. They are primarily caused by temperature variation and can be removed by additional calibration. By constructing a test environment with stable ambient temperature, drift errors can usually be minimized.

These situations are listed for reference only, it is expected that the test agency will select appropriate equipment that is capable of performing the test and has the stability to have a reading repeatability of ± 1dB made on the same filter at the same time, temperature and frequency conditions as the first reading.

4.2.2 Coaxial lines, connectors, and switches. All coaxial lines shall be RG-214/U, or equivalent double shielded cable, and shall conform to MIL-DTL-17. It is essential that cable with the characteristic impedance of type RG-214/U be used to connect the isolation attenuators together for the filter 'out' condition and to connect the component to the isolation attenuators for the filter 'in' condition. The length of cable connecting the isolation attenuators for the filter 'out' condition shall be within ±6 inches (±152.4 mm) of the combined length of the two cables connecting the component to the isolation attenuators for the filter 'in' condition. Type N, SMA or equivalent RF 50 ohm coaxial connectors conforming to MIL-PRF-39012 shall be used where applicable. When coaxial switches are used, they shall have a 50 ohm characteristic impedance, and a maximum voltage standing wave ratio (VSWR) of 1.1 to 1 at the frequency of measurement.

4.2.3 Isolation attenuators. Isolation attenuators are not necessary when testing is conducted using a network/system analyzer that has a 50 ohm input and output ports.

4.2.4 Insertion loss measurement. When the component under test has no provisions for coaxial connections, the insertion loss measurements shall be recorded after the component's input and output terminals are surrounded by RF shielding that has a common electrical connection with the shielding of the test equipment or test equipment cables. Use adequate clamping means on the isolation fixture when using a network/spectrum analyzer (see figure 2 and figure 3).

4.2.5 Standard attenuator. A standard attenuator for testing with network/spectrum analyzer shall be provided with the following characteristics:

a. Attenuation of 50 ± 0.5 dB over the frequency range of 150 kHz to 1,000 MHz, inclusive.

b. Maximum VSWR of 1.2 to 1 over the frequency range of 150 kHz to 1,000 MHz, inclusive.

c. Input and output impedance of 50 ohms.

The standard attenuator shall be inserted into the system in place of a component, to test for proper operation as specified (see 4.1).

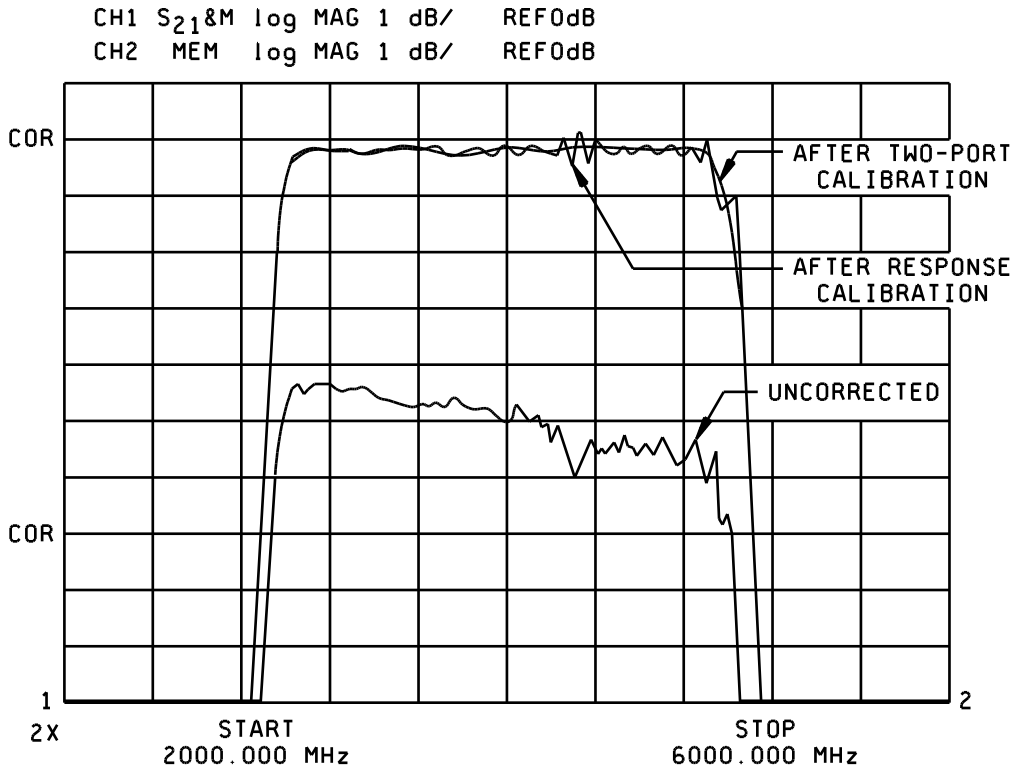

FIGURE 2. Measuring filter insertion loss.

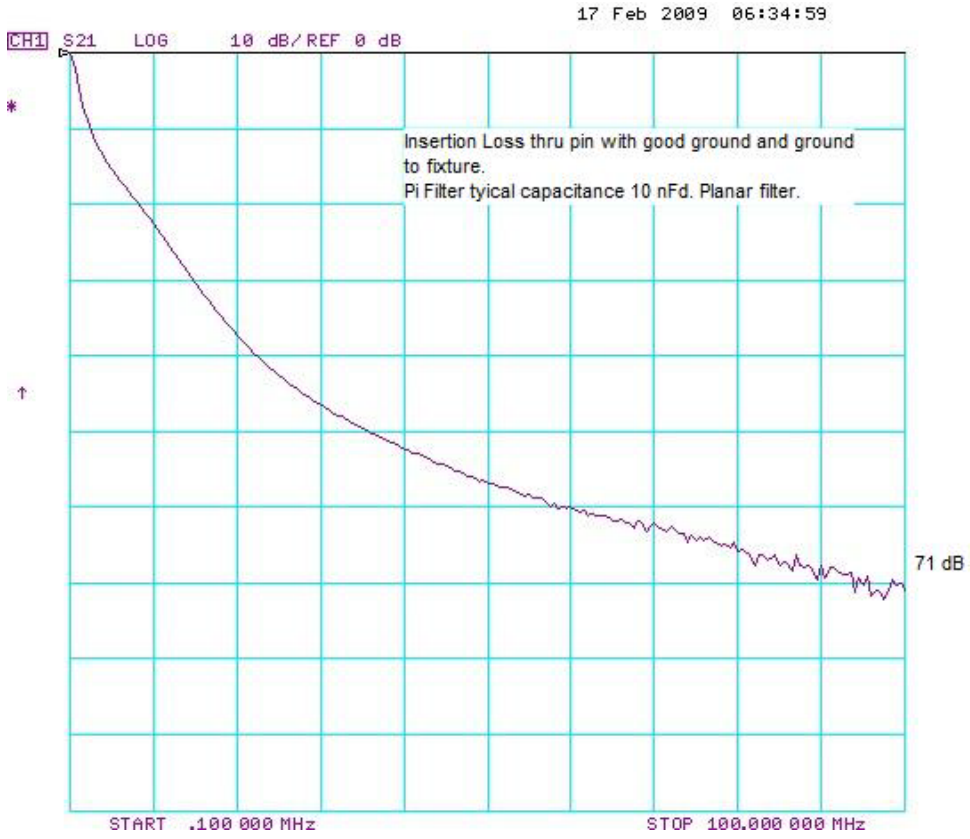

FIGURE 3. Insertion loss with good ground and good connection to test fixture.

5. METHOD OF TEST

5.1 Test conditions. Unless otherwise specified in the individual component specification, all measurements shall be made at room ambient temperature, atmospheric pressure, and relative humidity.

5.2 Test procedure.

5.2.1 Preliminary operation. To insure stability, each network/spectrum analyzer shall be operated for a period of at least 30 minutes immediately before measurement.

5.2.2 Method of measurement. The insertion loss of the component under the specified conditions and at the frequency of measurement may then be expressed in dB when testing is conducted with a network/spectrum analyzer; insertion loss is read directly from the instrument display.

5.2.2.1 Measurement procedure:

a. The fixture shall be capable of measuring insertion loss to 1 GHz.

b. The fixture will be closed using the bulkhead without the connector installed so that there is an opening between the input and output side of the enclosure.

c. The input and output probes will be connected together through the opening and the network analyzer “zeroed” through the frequency range of interest.

d. The connector will be installed to the bulkhead and the fixture will be enclosed, and

e. By movement of the input and output probes to each contact, the insertion loss shall be measured to verify a minimum or recorded for a data report.

The fixture with the connector installed shall be proof tested to insure the filter grounding is correct so that the actual filter performance is displayed. In the preparation of a test setup prior to measuring insertion loss, the measurement of the pin through, pin to adjacent pin, and pin to shell insertion loss can be used to verify the cables, shielded enclosure, and internal grounds of the DUT, see appendix for details.

6. NOTES

6.1 Intended use. This standard is intended to provide methods for insertion loss measurements of feed-through suppression capacitors and single and multiple-circuit, radio frequency power line filters. These insertion loss measurements are conducted in a 50 ohm system for the purpose of quality control during quantity production.

6.2 Subject term (keyword) listing.

Capacitors, feed-through
Filters, EMI
Filters, RFI

6.3 Changes from previous issue. Asterisks are not used in this revision to identify changes with respect to the previous issue, due to the extensiveness of the changes.

APPENDIX A

ANALYSIS OF FILTER MEASUREMENTS

A.1 Discussion: In the measurement of the insertion loss of a filter, there are several things that can go wrong. The purpose of this appendix is to identify the errors that can cause a reading to be incorrect. Solutions will also be suggested to assist the technician in determining if the reading is correct or other extenuating circumstances have affected the result. Readings can be either continuous wave (CW), which is a reading at a specific frequency which is the normal condition of measurement for a production acceptance test, or read from a swept frequency chart. This analysis will be directed to the measurement of insertion loss of a pin in a filter connector. They will apply to other devices as well.

A.1.1 Elements: A filter pin connector consists of as a minimum the following components:

a. A shell of a metal, aluminum, steel or brass, or a composite material, that has been appropriately plated with a conductive finish,

b. A filter element which can be a planar array which is a disk with an appropriate capacitor grade ceramic material. The ceramic planar is constructed in layers as a multilayer printed circuit board (PCB), with active and ground electrodes placed on alternate layers creating a capacitor at each location that corresponds to the contact pattern of the connector arrangement. There also can be a tubular capacitor creating one element of the filter.

c. In addition to the capacitor, there can be ferrite beads placed on each pin to provide the inductive element of the filter.

d. There will be three elements in a planar Pi filter. There will be two capacitor arrays, one on top of the other with a ferrite bead on each pin in between the two capacitors.

e. The outer periphery of the array will have a metalized surface that is connected to all of the ground electrodes inside the array. Similarly, there is metallization inside each hole and on the surface of the array allowing connection to the internal active layers and to the pin of the connector that passes through the array. The surface electrodes are sufficiently isolated from each other to prevent interconnection and shorting to each other.

f. The ground electrode will be connected to the connector internal shell surface using a circumferential spring.

g. The connector is then finished per the standard design configuration of each manufacturer.

A.1.2 Details: The measurement of insertion loss is performed by using a signal that is at a frequency measured in Hz (cycles/sec). This frequency is usually in the range of 1 MHz to 1,000 MHz. Due to the high frequency, the currents created will travel on the surface of the conductors. Hence the quality and thickness of the surface plating will affect the measurement.

APPENDIX A

The test equipment will typically have 50Ω terminations and the response of the filter is a measure of how closely the filter matches the 50Ω of the test equipment. Frequencies at which the filter impedance is close to 50Ω there is little or no attenuation and full transfer of energy from source through the DUT occurs. With a Pi-filter, as frequencies increase, the ratio of the impedance of the filter to the test equipment increases and thus shows increasing attenuation. This is not just resistance but capacitance and inductance as well. These elements combine to give the distinct response typical of a filter insertion loss measurement. Each behaves differently in the presence of an RF signal. The resistance does not change very much with frequency. However, the impedances associated with the capacitance and inductance does change with frequency.

The capacitance has a property called capacitance reactance which becomes smaller as the frequency increases. This is an inverse relationship. So as a signal is passed down a conductor that has a capacitor connected between the conductor and the ground reference, the capacitor reactance with increasing frequency will become smaller and smaller with a fixed capacitance value so that the RF signal is reduced, attenuated, so that the resultant signal reaching the load is diminished.

The inductance has a property called inductive reactance that increases as the frequency is raised. This is a direct relationship to the frequency for a specific inductance. In this case an inductance in series with the RF signal will impede the signal causing losses or delays. An example of this is that a foot of 24 gauge wire with its internal self inductance will cause a signal delay of 1 nanosecond. All conductors and conductive surfaces have a self inductance.

As noted above, another area of concern is the condition of the plating on the shell of the connector, the plating on the ground spring and its connection to the connector shell, the plating of the array and its interface with the spring, and the internal ground plane in the array (number of layers and thickness of the electrode).

A.2 Test condition: In order to measure the insertion loss of a filter connector, it is necessary to attach it to a bulkhead that is part of a shielded enclosure. The bulkhead needs to be attached to shielded enclosures at each end. The shielded enclosures and bulkhead need to be noble metal plated (silver is a very good choice) and assure that there is good conductivity between the bulkhead and each chamber. The input leads need to have their shields terminated as close and with as low an inductive clamp to each chamber's ground and as close to the bulkhead as possible. Before the connector is attached, the network/spectrum analyzer needs to be normalized. This is accomplished as noted above by attaching the bulkhead and connecting the input and output leads together. Select the normalize function of the instrument being used through the frequency range of interest.

Once normalized, the connector shell needs to be attached to the appropriate bulkhead chosen for the shell size of the connector being tested. This bulkhead needs to be designed for the shell size to be tested with assurances that there is the maximum surface available for the connector flange. With all things properly attached and all elements of the connector design being in accordance with the guide lines listed above, the performance should look like the trace on figure 3 and the traces shown in figure A-I.

APPENDIX A

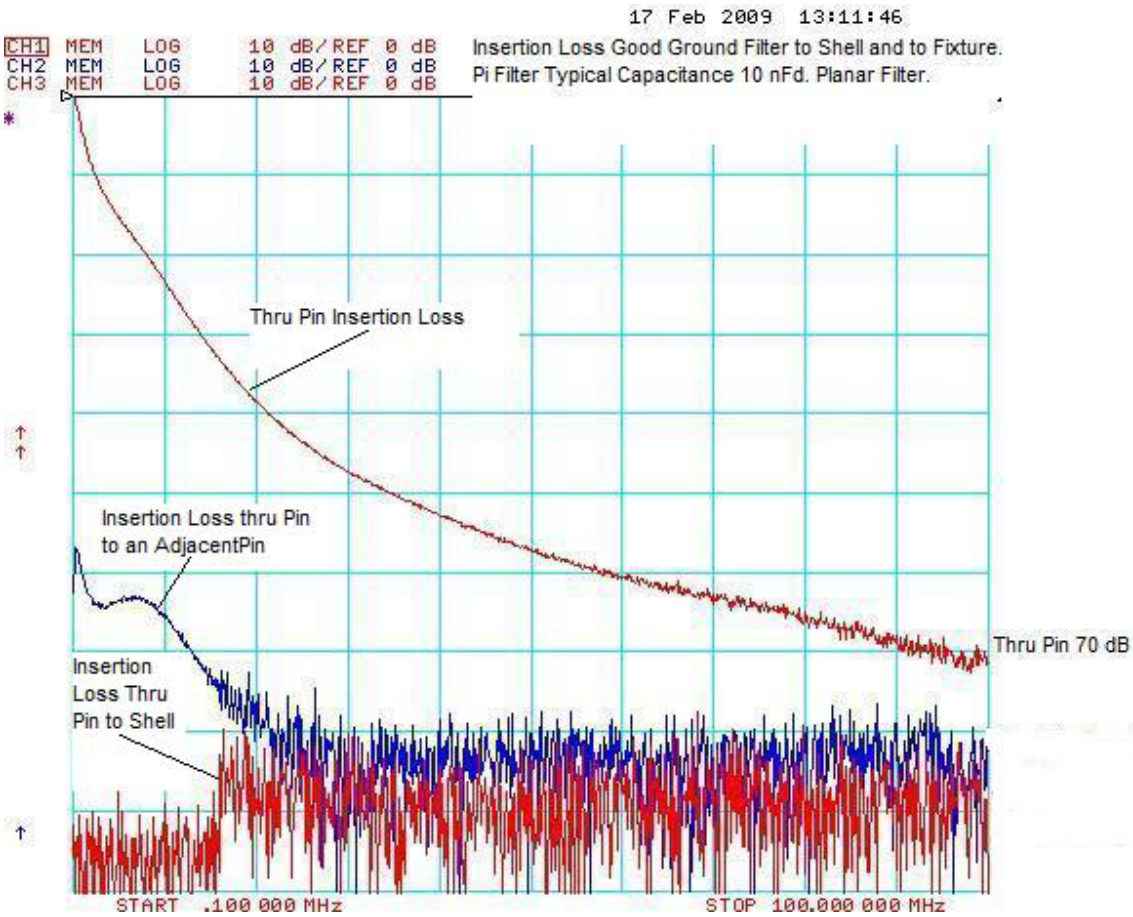

FIGURE A-I. Insertion loss good filter and shell ground.

Here are some things that can influence the result and some are easily correctable and there are some that will take time to correct. The ground path of each circuit consists of the following elements in series:

> The array electrode material, the ground plating, the array ground spring, the connector shell plating, and the attachment to the bulkhead.

Each one of these can decouple the filter from ground. Since we are dealing with an RF signal, as frequency increases the capacitance reactance decreases. Since it is in series to ground with the self inductance of each of the above items, the performance of the filter will be limited once the capacitance reactance equals and becomes less than the inductive reactance of these elements.

APPENDIX A

Figure A-2 shows an example of a filter connector that has a filter ground problem. This situation could be the result of poor impedance in the array ground or the connection to the connector shell. The trace noted as Thru Pin shows poor attenuation at higher frequencies. The measurement of the insertion loss between this pin and an adjacent pin shows an insertion loss that almost matches the thru pin insertion loss at higher frequencies. There is RF signal on the ground plane and it is being coupled into the adjacent contact. The bottom trace shows the insertion loss to the fixture and is indication of a good fixture ground. This signal should have attenuation levels 10 dB to 20 dB or greater than the desired measurement level (Thru Pin). This says that the shell plating is good and that the connection to the bulkhead is also good.

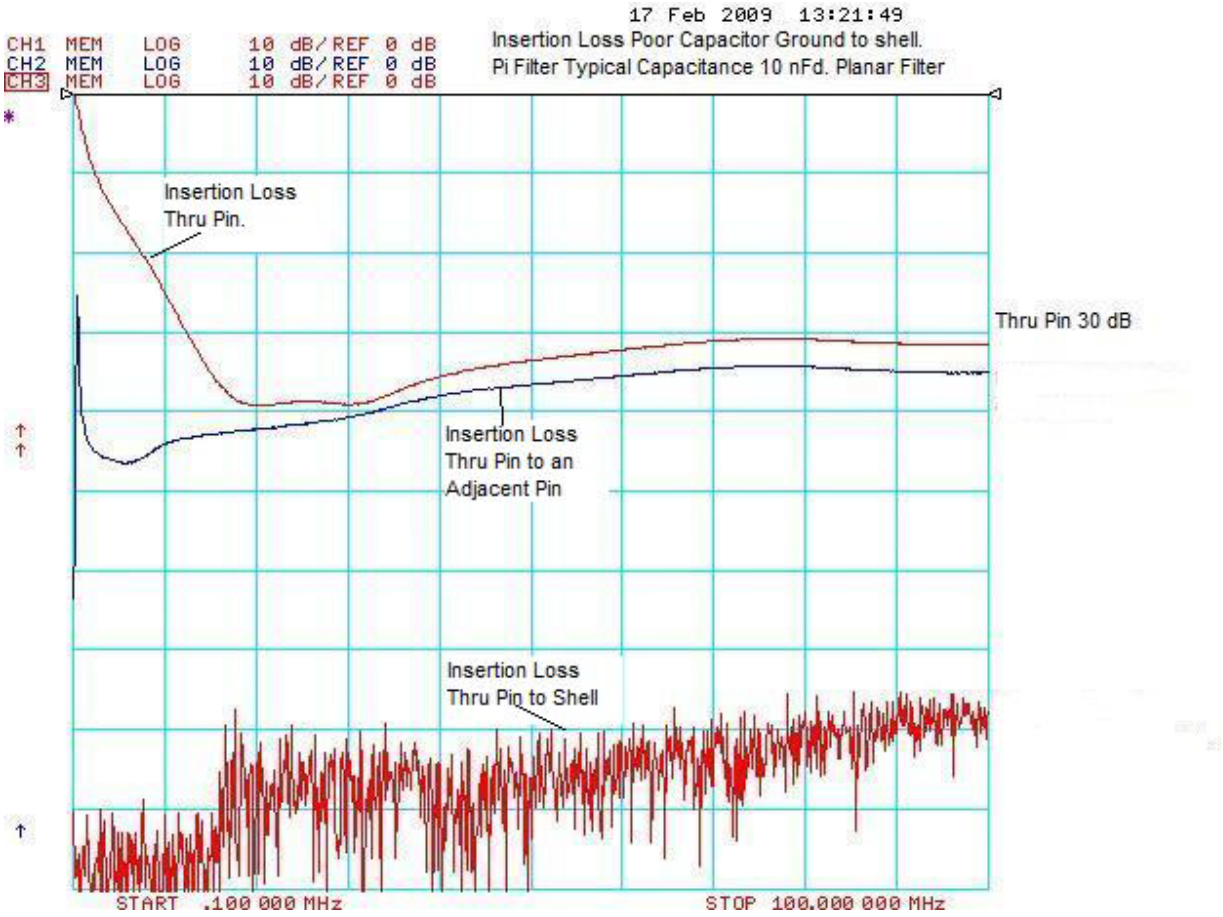

FIGURE A-2. Insertion loss poor filter ground to shell.

APPENDIX A

Figure A-3 represents the filter performance if there is an issue with the shell to fixture grounding. Similar measurements would be expected if there is an issue with the shell plating or any other issue affecting grounding to the connector shell. The insertion loss of both pin to shell and pin to adjacent pin measurements will show similarly as very low loss as frequency increases. A measurement of the pin to test fixture will show high loss and is similar to a pin to shell measurement when the shell is properly grounded.

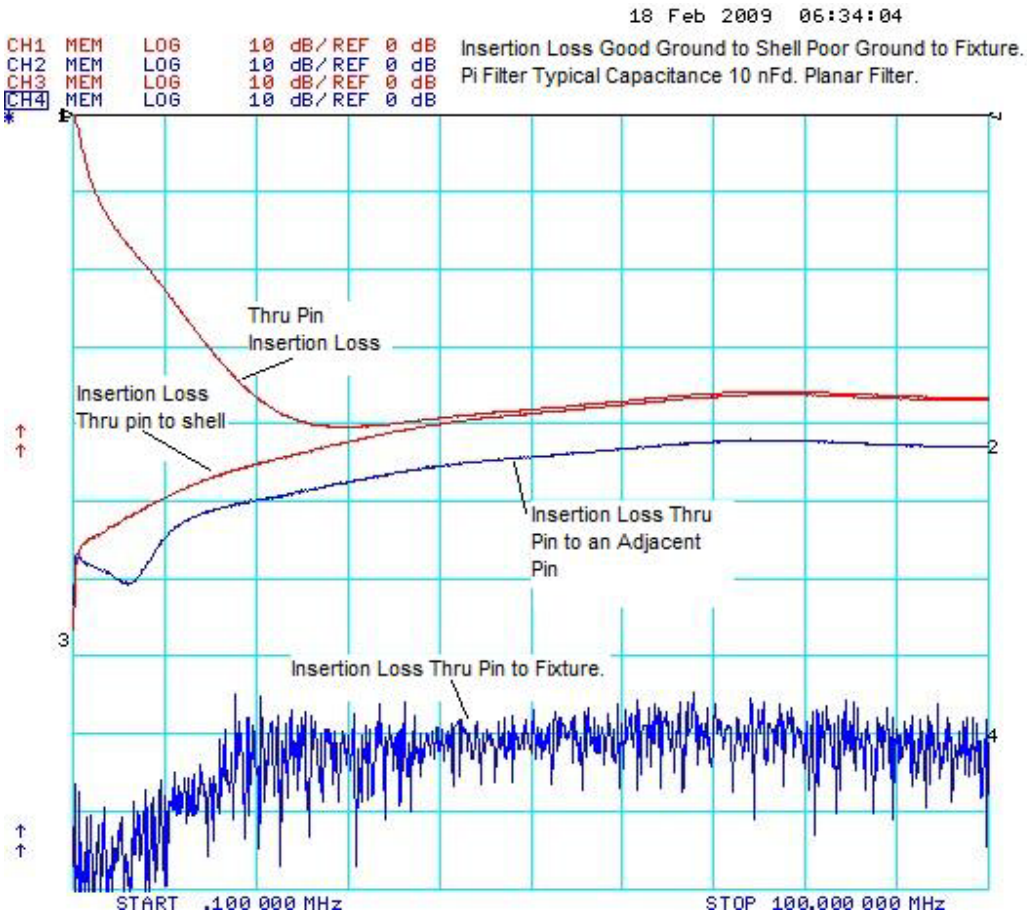

FIGURE A-3. Insertion loss poor filter and fixture ground.

Custodians:
Army - CR
Navy - EC
Air Force - 85
DLA - CC

Review activities:
Army - MI
Navy - YD

Preparing activity:
DLA - CC

(Project EMCS-2009-001)

NOTE: The activities listed above were interested in this document as of the date of this document. Since organizations and responsibilities can change, you should verify the currency of the information above using the ASSIST Online database at http://assist.daps.dla.mil .