INCH-POUND
MIL-STD-202-310
18 April 2015

SUPERSEDING
MIL-STD-202G
w/CHANGE 2 (IN PART)
28 June 2013
(see 6.1)

DEPARTMENT OF DEFENSE

TEST METHOD STANDARD

METHOD 310, CONTACT-CHATTER MONITORING

AMSC N/A

FSC 59GP

FOREWORD

1. This standard is approved for use by all Departments and Agencies of the Department of Defense.

2. This entire standard has been revised. This revision has resulted in many changes to the format, but the most significant one is the splitting the document into test methods. See MIL-STD-202 for the change summary.

3. Comments, suggestions, or questions on this document should be emailed to std202@dla.mil or addressed to: Commander, Defense Logistics Agency, DLA Land and Maritime, ATTN: VAT, P.O. Box 3990, Columbus, OH 43218–3990. Since contact information can change, you may want to verify the currency of this address information using the ASSIST Online database at https://assist.dla.mil.

CONTENTS

PARAGRAPH		PAGE
	FOREWORD	ii
1.	SCOPE	1
1.1	Purpose	1
2.	APPLICABLE DOCUMENTS	1
3.	DEFINTIONS	1
4.	GENERAL REQUIREMENTS	1
4.1	Test circuits	1
4.1.1	Selection	1
4.1.1.1	Selection of test-circuit A	1
4.1.1.2	Selection of test-circuit B	1
4.2.	Test systems	2
4.2.1	Test-circuit A	2
4.2.1.1	Calibration procedure for test-circuit A	2
4.2.2	Test-circuit B	6
4.2.2.1	Calibration procedure for test-circuit B	6
4.3	Procedure	8
4.3.1	Preparation	8
4.3.2	Points of connection	8
4.3.3	Test conditions	8
5.	DETAILED REQUIREMENTS	8
5.1	Summary	8
6.	NOTES	9
6.1	Supersession data	9

FIGURES	PAGE
1. Test-circuit A; monitor circuit for contact-opening and closing	3
2. Calibration circuit for test-circuit A	4
3. Test-circuit B; monitor circuit for contact-chatter and false closures	5
4. Calibration circuit for test-circuit B	7

METHOD 310
CONTACT-CHATTER MONITORING

1. SCOPE

1.1 Purpose. This test is conducted for the purpose of detecting contact-chatter in electrical and electronic component parts having movable electrical contacts, such as relays, switches, circuit breakers, etc., where it is required that the contacts do not open or close momentarily, as applicable, for longer than a specified time-duration (see 4.3) under environmental test conditions, such as vibration, shock, or acceleration. This test method provides standard test procedures for monitoring such "opening of closed contacts" or "closing of open contacts".

2. APPLICABLE DOCUMENTS

This section not applicable to this standard.

3. DEFINTIONS

This section not applicable to this standard.

4. GENERAL REQUIREMENTS

4.1. Test circuits.

4.1.1 Selection. In this method there are two test-circuits: A (see 4.2.1), and B (see 4.2.2). The selection of the test-circuit depends largely upon the type of electrical contacts to be tested. Test-circuit B is preferred, whenever possible, to avoid contact contamination caused by the formation of carbonaceous deposits on the contacts. The individual specification shall specify the test-circuit and time-duration (see 4.3.3) required in connection with monitoring of shock and vibration tests. The test-circuits listed herein are "recommended" reference circuits. Any comparable test-circuit which meets the test requirements and the calibration procedures as stated herein, may be used for this test.

4.1.1.1 Selection of test-circuit A. Test-circuit A is for monitoring test-specimens with a single set of contacts, for the opening of normally-closed contacts or false closures of normally-opened contacts (see figure 1). Test-circuit A should not be specified for specimens whose capability includes low-level or dry-circuit ratings (10 milliamperes or less and 2 volts or less for openings or closings less than 10 microseconds); since the current through the electrical contacts under test from the test-circuit may cause arcing, thus damaging the contacts.

4.1.1.2 Selection of test-circuit B. Test-circuit B is for monitoring test-specimens with a single set of contacts, for the opening of normally-closed contacts and false closures of normally-open contacts (see figure 3). Test-circuit B should not be used for openings or closings of less than 10 microseconds. Test-circuit B does not allow current in excess of 20 milliamperes or an open-circuit voltage in excess of 2-volts during monitoring; which insures that there will be no arcing, which will cause damage, to low-level and dry-circuit test specimens.

4.2. Test systems.

4.2.1 Test-circuit A. The test circuit shall be the thyratron circuit shown on figure 1 or an approved equivalent circuit. The values for R1, C1, and the suppressor grid-cathode voltage, controlled by R7, principally controls the firing of the thyratron and are so chosen that the thyratron will fire when the duration of the contact-opening exceeds the time-duration specified in the individual specification (see 4.3.3 and 5.1). For the longer time-durations, such as above 1 millisecond, it may be necessary to change the values of R2, R5, and R6.

a. To monitor normally-closed contacts, the normally-closed contacts are connected to BP1 and BP2, with switch S1 in the "normally-closed position". The grid of the thyratron is placed at ground potential. The cathode of the thyratron is at a positive potential (depending on the setting of R7), thus providing sufficient negative bias to cut the thyratron "off". Any contact chatter (opening of closed contacts) will cause the grid of the thyratron to rise exponentially to +150 volts at a rate determined by the preselected time constant of R1 and C1. As long as the contacts remain open, the grid potential will continue to rise. If the contacts remain "open" for longer than the specified interval, the grid potential rises to the point at which the thyratron conducts and ionizes, thus lighting DS1. Since, in a thyratron, the grid loses control of conduction as soon as the tube conducts, the contacts being monitored can reclose at any time thereafter without affecting the monitoring circuit. Thus, lamp DS1 will remain "on" until the thyratron is manually reset by operation of switch S2.

b. To monitor normally-open contacts for false closures, it is necessary to operate switch S1 to the "normally-open position", so that the connection between the +150 volts and the time-constant charging circuit is "open". When open contacts are connected to BP1 and BP2 and the connection is made, these contacts "close". At contact closure, voltage is applied to the charging circuit, starting a build-up in the same manner as described in (a) for normally-closed contacts. At the conclusion of the test, if lamp DS1 is "off", then there has been a no-chatter interval exceeding the specified duration; if the lamp is "on", then there was at least one-interval when the specified time-duration was exceeded. After an indication of failure, the thyratron circuit shall be restarted by operation of switch S2.

4.2.1.1 Calibration procedure for test-circuit A. The calibration-circuit shown on figure 2 may be used to calibrate the monitoring-circuit shown on figure 1 by using the following procedure:

a. Make the proper connections of the monitoring-circuit to the calibration-circuit as shown, and set switch S1 to position A.

b. Calibrate the oscilloscope triggering input as follows:
   (1) Set switch S4 to position A, so that the trigger input is connected to the Y-axis input of the oscilloscope.
   (2) Set the time-base control of the oscilloscope for approximately 20-percent of the time-duration for which the calibration is being made.
   (3) Set the Y-amplitude of the oscilloscope for 1-volt per centimeter.
   (4) Set the triggering coupling to ac sensitivity.
   (5) Open the switch S3 and adjust the triggering level and stability control so that the trace on the oscilloscope will trigger at 0.5-volt or less. The closer the trigger-level is to zero, the greater the accuracy of calibration.

c. Set switch S4 to position B, so that the Y-axis input of the oscilloscope is connected through capacitor C4 to the plate of the thyratron in the test circuit.

d. Close switch S3.

e. Set the Y-amplitude of the oscilloscope for a usable display, and the time-base as in preceding (b) (2).

f. Depress monitor-circuit reset switch S2 of figure 1 to set the circuit in the "ready" position, i.e., with the circuit being calibrated and lamp DS1 extinguished.

g. Open switch S3; the observed trace of the oscilloscope should move across the screen at a positive amplitude until it is deflected downward by the negative pulse created when the thyratron fires. The time interval between the start of the trace and the negative pulse is the detection time. Adjust R7 of figure 1 to the time-duration specified in the individual specification.

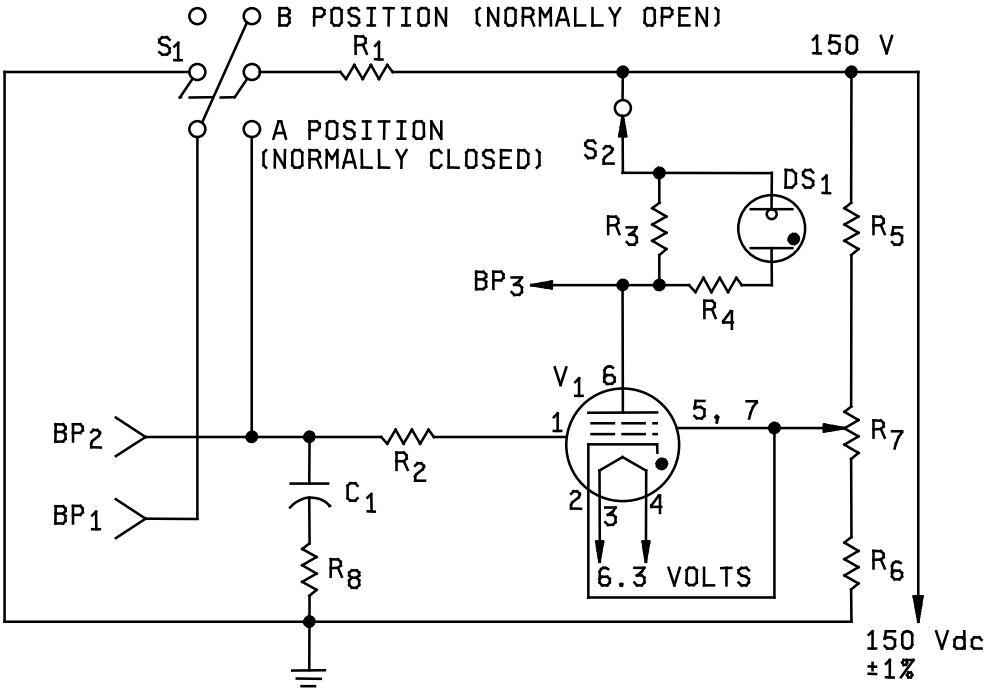

Resistors	Capacitors
R_1 - 35K 1/2W, 1% (see note 1)	C_1 - .0022μF, 600 VDCW (see note 1)
R_2 - 27K 1/2W, 5%	
R_3 - 47K 1W, 5%	**Miscellaneous**
R_4 - 200K 1/2W, 5%	
R_5 - 70K 1W, 5%	DS_1 - NE-51
R_6 - 2.4K 1W, 5%	S_1 - DPDT
R_7 - 5K 1W	S_2 - SPSTNC 125V 1 amp (push)
R_8 - 500 1/2W, 5%	V_1 - JAN-5727/2D21W

NOTES:
1. These values are to be chosen to obtain the desired time-duration for the applicable test condition (see 4.3). These particular values are applicable to 10 microseconds time-duration only.

FIGURE 1. Test-circuit A; monitor circuit for contact-opening and closing.

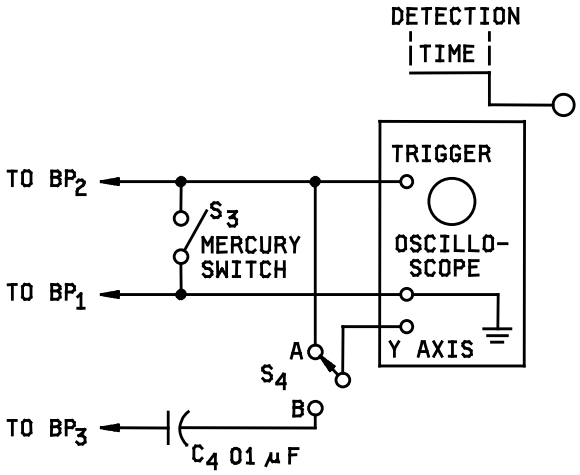

NOTE: The oscilloscope shall have an accuracy of ±3 percent or better on time base and have provision for external triggering.

FIGURE 2. Calibration circuit for test-circuit A.

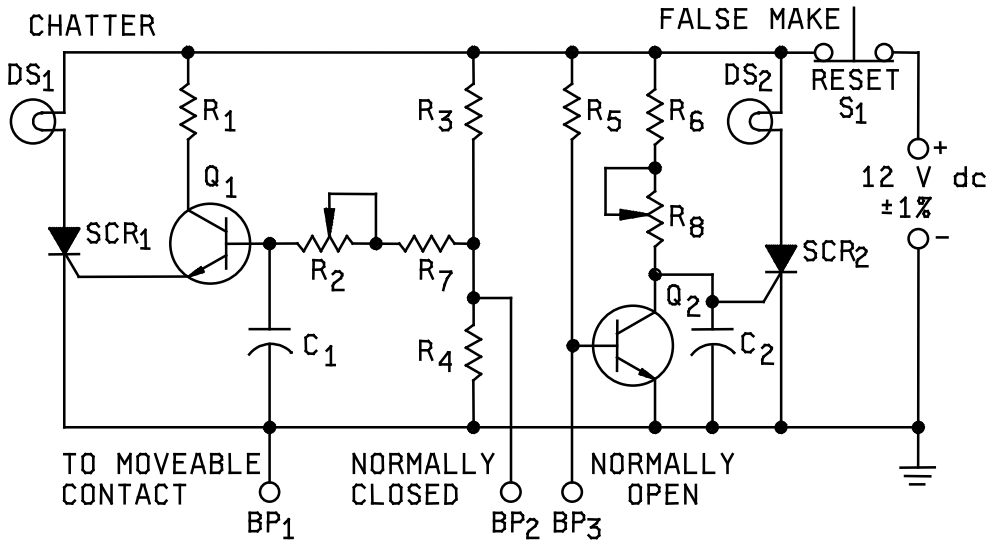

C_1, C_2	- Choose for specified time (see note 1)	R_6	- 1,000 ohms 1/4W, 5%
DS_1, DS_2	- No. 344 Lamp	R_7	- 100 ohms 1/4W, 5%
R_1	- 750 ohms 1/4W, 5%	R_8	- 200 ohms pot.
R_2	- 2,000 ohms pot.	Q_1, Q_2	- 2N332A or equivalent
R_3, R_5	- 10,000 ohms 1/4W, 5%	SCR_1, SCR_2	- 2N1595 or equivalent
R_4	- 2,500 ohms 1/4W, 5%	S_1	- SPST NC Push

NOTE:

1. Use .0022 μF for 10 microsecond time-duration. Other time-duration will require larger capacitors.

FIGURE 3. Test-circuit B; monitor circuit for contact-chatter and false closures.

4.2.2 Test circuit B. The monitor-circuit shown on figure 3 permits detection of contact-chatter of closed contacts and false closure of open contacts, independently or simultaneously. The low contact-load levels (see 4.1.1.2) insure that there will be no arcing of the contacts during monitoring.

a. The chatter portion of figure 3, resistors R3 and R4 form a voltage divider with their junction at +2 volts. The closed contacts of the component under test, short-circuit R4 and place the base of transistor amplifier Q1 to ground potential. When the contacts under test "chatter" (open), resistor R4 is no longer short-circuited and capacitor C1 starts to charge through R2 and R7 to +2 volts. The time necessary for C1 to charge to the correct bias-level is determined by the resistance of R2 and R7 and the capacitance value of C1. As transistor Q1 draws current through the gate of SCR1, the unit will fire and turn-on lamp DS1. Since in a silicon-controlled rectifier, the gate loses control after it is turned "on", the contacts can reclose at any time thereafter without affecting the monitoring circuit. The time-delay, before turn-on, can be adjusted by varying R2 and selecting the capacitance value of C1. (For example: C1 = .002 μF gives a 10-microsecond open-contact time.)

b. In the false-make portion of figure 3, transistor-amplifier Q2 is normally "on" with the gate of SCR2 being effectively held at ground potential by the low-output impedance of transistor Q2. When a "false-make" occurs, the base of Q2 transistor is grounded, turning Q2 "off". This allows the gate of the SCR2, which is tied to the collector of transistor Q2, to rise to +12 volts. The rate of increase is determined by the value of C2 and R8. (For example: C2 = .002 μF gives a 10-microsecond false-make time.) When the voltage reaches the gate turn-on level of SCR2, lamp DS2 will light, indicating a false closure of the open contacts.

c. When this circuit is being used to simultaneously monitor both the open and closed contacts of a double set of contacts:

   (1) If DS1 "lights", it is an indication of contact chatter.
   (2) If DS1 and DS2 "lights", it is an indication of false transfer or possible bridging, i.e., the movable contact of the open circuit "closes" but the closed circuit has not opened.
   (3) If DS2 "lights", it is an indication of bridging.

d. Restoration of the circuit for an indication of failure is accomplished by the operation of S1.

4.2.2.1 Calibration procedure for test-circuit B. The calibration-circuit shown on figure 4 may be used to calibrate the monitoring-circuit shown on figure 3 by using the following procedure:

a. Make the proper connections of the monitoring-circuit to the calibration-circuit.

   (1) BP1 and BP2 for contact-chatter calibration.
   (2) BP1 and BP3 for false contact-make calibration.

b. Select the appropriate 5 volt square-wave "pulse-polarity" and "pulse-width" to be furnished by the pulse generator and monitor the pulse on the oscilloscope, as follows:

   (1) For contact-chatter calibration: Negative pulse.
   (2) For false contact-make calibration: Positive pulse.
   (3) Pulse width for either of the preceding (1) or (2) equal to the required detection time.

c. If DS1 or DS2 (as applicable) "lights", adjust R2 or R8 until the light is extinguished.

d. Slowly adjust R2 and R8 (as applicable) to the time-duration specified in the individual specification, as indicated by the first point at which DS1 or DS2 "lights".

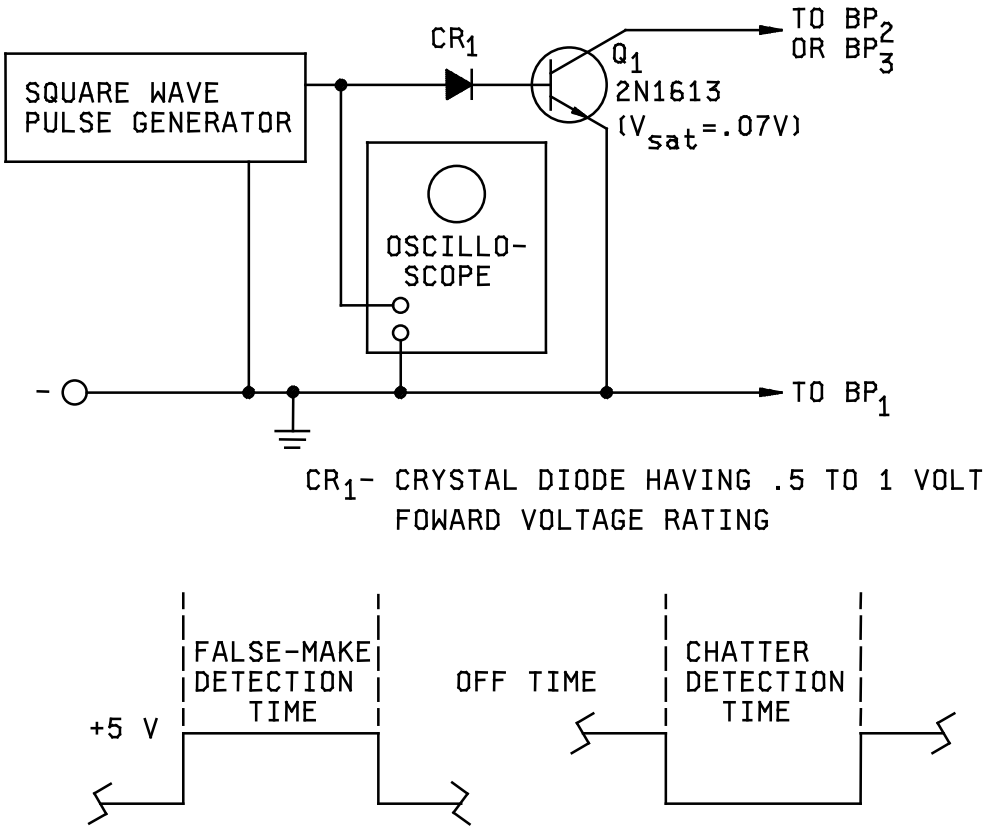

NOTES:
1. The square-wave pulse generator and oscilloscope shall have an accuracy of ±3 percent or better.
2. The ratio of off-time to detection-time shall be 10:1 or better.

FIGURE 4. Calibration circuit for test-circuit B.

4.3. Procedure.

4.3.1 Preparation. The monitor-circuits of figures 1 and 3 shall be calibrated, immediately prior to use, using the applicable calibration-circuit (see figures 2 and 4, respectively). The calibration-circuit shall then be disconnected from the monitoring-circuit.

4.3.2 Points of connection. The contacts of the test-specimen being monitored shall be connected to points BP1 and BP2 for test circuit A for both contact-chatter and false-make contact conditions. For test circuit B, the points of connection shall be BP1 and BP2 for contact-chatter condition and to points BP1 and BP3 for false-make contact condition. The test specimen shall then be subjected to the shock, vibration, acceleration, or other environmental test during which this contact-chatter monitoring test method is to be used. If specified in the individual specification, test specimens having normally-closed contacts may be wired in series to monitor for opening of contacts, and those having normally-open contacts may be wired in parallel to monitor for closing of contacts. In this case, if contact opening or closing is indicated, it will then be necessary to reset each test specimen separately and monitor it individually to determine which one is defective.

4.3.3 Test conditions. Test specimens shall be subjected to one of the following test conditions, as specified in the individual specification:

Test condition	Time duration
A	10 microseconds
B	100 microseconds
C	1 millisecond
D	5 milliseconds
E	20 milliseconds

5. DETAILED REQUIREMENTS

5.1 Summary. The following details are to be specified in the individual specification:

a. Test circuit letter (see 4.1.1, 4.2.1, and 4.2.2).

b. Test condition letter for maximum allowable time-duration of contact-opening or closing, as applicable (see 4.3.3).

c. Whether series-connection (of normally-closed contact test-specimens) or parallel-connection (of normally-open contact test-specimens) may be allowed (see 4.3.2).

6. NOTES

(This section contains information of a general or explanatory nature that may be helpful, but is not mandatory.)

6.1 Supersession data. The main body and 38 parts of this revision of MIL-STD-202 replace superseded MIL-STD-202.

Custodians:
Army - CR
Navy - EC
Air Force - 85
DLA - CC

Review activities:
Army - AR, AT, AV, CR4, MI, SM, TE
Navy - AS, OS, SH
Air Force - 19, 99
NSA - NS

Preparing activity:
DLA – CC

(Project 59GP-2015-040)

NOTE: The activities listed above were interested in this document as of the date of this document. Since organizations and responsibilities can change, you should verify the currency of the information above using the ASSIST Online database at https://assist.dla.mil/