INCH - POUND

MIL-STD-1835D
1 June 2004
SUPERSEDING
MIL-STD-1835C
15 August 2000

DEPARTMENT OF DEFENSE INTERFACE STANDARD

ELECTRONIC COMPONENT CASE OUTLINES

AMSC N/A **FSC 5962**

FOREWORD

1. This standard is approved for use by all Departments and Agencies of the Department of Defense (DoD).

2. The Department of Defense is committed to identifying and using standard electronic parts at reasonable cost and highest reliability. The electronic component case outline is important in this context, and must be selected with this objective in mind.

3. Significant changes have occurred in the design, manufacturer, and variety of electronic device encapsulation and attachment methods. These changes are reflected in this standard with new and revised case outlines.

4. Before the publication of this standard, electronic case outlines were listed in appendix C to MIL-M-38510.

5. Comments, suggestions, or questions on this document should be addressed to Commander, Defense Supply Center Columbus ATTN: DSCC-VA, P O Box 3990, Columbus, OH 43218-3990 or emailed to STD1835@dscc.dla.mil. Since contact information can change, you may want to verify the currency of this address information using the ASSIST Online database at www.dodssp.daps.mil.

CONTENTS

PARAGRAPH		PAGE
1.	SCOPE	1
1.1	Scope	1
1.2	Purpose	1
1.2.1	Tailoring	1
1.2.2	Classification	1
1.2.3	Component case outline presentation	1
2.	APPLICABLE DOCUMENTS	2
2.1	General	2
2.2	Government documents	2
2.2.1	Specifications, standards, and handbooks	2
2.3	Non-Government publications	2
2.4	Order of precedence	2
3.	DEFINITIONS	3
3.1	Definitions	3
3.1.1	Electronic device component case outline (package)	3
3.1.2	Configuration	3
3.1.3	Package style	3
3.1.4	Package type	3
3.1.5	Chip carrier (CC) package	3
3.1.6	Can package	3
3.1.7	In-line package (IP)	3
3.1.8	Flat package (FP)	3
3.1.9	Grid array (GA) package	3
3.1.10	Index	3
3.1.11	Index area	3
3.1.12	Base plane	3
3.1.13	Seating plane	3
3.1.14	Coplanarity	3
3.1.15	Dimension	4
3.1.16	Reference dimension	4
3.1.17	Basic dimension (BSC)	4
3.1.18	True position	4
3.1.19	Datum	4
3.1.20	Land	4
3.1.21	Land pattern	4
3.1.22	Lead position overlay	4
3.1.23	Cavity-up, cavity-down	4
3.1.24	Tailoring	4
3.1.25	Dimensioning symbols	5
4.	GENERAL REQUIREMENTS	6
4.1	Package design	6
4.2	Package terminal identification	6
4.3	Package index implementation	6
4.4	Package dimensions and symbols	6
4.5	Dimension verification	6
4.6	Package material characteristics	6
4.7	Package descriptive designation system	6
4.7.1	Case outline letter/ Part or Identifying Number (PIN) designator	6
4.8	Inactive for new design	6

CONTENTS

PARAGRAPH PAGE

5. DETAIL REQUIREMENTS 20
5.1 Package styles and package types 20
5.2 Unique package features 20
5.2.1 Flat pack end leads 20
5.2.2 Glass sealed flat pack minimum S1 dimensions 20
5.2.3 DIP lead row center dimension eA 21
5.2.4 DIP dimensions L and Q 21
5.2.5 DIP end variations dimension S1 22
5.2.6 Leadless chip carrier (LCC) castellation irregularities 22
5.2.7 Coplanarity deviation 23
5.2.8 Package cavity orientation 23
5.2.9 Package drawings 23
5.3 Dimensional listings in individual requirements 23

6. NOTES 24
6.1 Intended use 24
6.2 Tailoring guidance for contractual application 24
6.3 Subject term (key word) listing 24
6.4 Package cross-reference list 25
6.5 Plastic encapsulated microcircuit packages 27
6.6 Changes from previous issue 28

FIGURES

1 Package descriptive designation system 7
2 Example of a (scope) page from a device specification showing the identification/specification of case outlines (packages) 11
3 Lead bend angle 20
4 Lead space from package end 20
5 Lead row center dimension 21
6 DIP standoff dimension Q 21
7 DIP package end variations 22
8 Measurement and alignment of LCC castellation 22
9 Coplanarity deviation 23
10 Package cavity orientation 23

TABLES

I. Predominant package body material prefixes 8
II. Terminal location prefixes 8
III. Package outline style codes 8
IV. Lead-form (or terminal shape) suffixes 9
V. Package design options 10
VI. Package case outline list 12
VII. Inactive package case outline list 18
VIII. Package cross-reference list 25
IX. Plastic encapsulated microcircuit packages 27

CONTENTS

REQUIREMENT NO.	REQUIREMENTS
101A	Flat pack style
102	Dual-in-line package style
103 A	Can style
104 A	Ceramic, metal-sealed, single-in-line package style
105	Ceramic, square and rectangular leadless chip carrier styles
106	Ceramic, glass-sealed, gullwing-lead, chip carrier style
107 A	Ceramic, metal-sealed, gullwing-lead, chip carrier style
108 A	Ceramic, glass-sealed, "J" lead, chip carrier style
109 A	Ceramic, metal-sealed, "J" lead, chip carrier style
110	Ceramic, metal-sealed, unformed-lead, chip carrier style
111	Ceramic, pin-grid-array style
112	Metal base flange mount style
113	Dual leadless chip carrier style
114	Ceramic, quad leaded chip carrier style with non-conductive tie bar
115	Ceramic, zig-zag in-line package style
116	Ceramic, staggered pin grid array style
117 A	Dual flat pack style with gullwing leads
118 A	Bottom terminal chip carrier style
119	Single row flange mount style

This page intentionally blank

1. SCOPE

1.1 Scope. This standard establishes and maintains a compilation of electronic component case outlines and should be useful to all levels of manufacturing that culminate in the production of reliable and logistically supportable electronic equipment.

1.2 Purpose. The purpose of this standard is to assure complete mechanical interchangeability of all electronic component case outlines of a particular style and type, regardless of source, commensurate with the requirements of high density electronic equipment manufacturing.

1.2.1 Tailoring. Some tailoring of case outlines is to be accomplished by users of this standard. Details for tailoring are presented with each style of case outline (when required, see 3.1.3 and 6.2).

1.2.2 Classification. Electronic component case outlines are of the styles and types identified in accordance with the descriptive designation system used herein (see 4.7). A cross-reference is included in section 6 indicating the relationship between old designations from MIL-M-38510 appendix C and the new designations used herein.

1.2.3 Component case outline presentation. All case outlines presented in this standard are drawn in orthogonal projections. Dimensions are as shown, presented in both inch and metric units of measurement. The dimensions are labeled with the symbols listed in 3.1.25 herein. The drawings are intended only as illustrations of a case outline style. In some instances, the drawings show added detail for emphasis; in most instances, the drawings are distorted by intent.

2. APPLICABLE DOCUMENTS

2.1 General. The documents listed in this section are specified in sections 3, 4, and 5 of this standard. This section does not include documents cited in other sections of this standard or recommended for additional information or as examples. While every effort has been made to ensure the completeness of this list, document users are cautioned that they must meet all specified requirements documents cited in sections 3, 4, and 5 of this standard, whether or not they are listed.

2.2 Government documents.

2.2.1 Specifications, standards, and handbooks. The following specifications, standards, and handbooks form a part of this document to the extent specified herein. Unless otherwise specified, the issues of these documents are those cited in the solicitation or contract.

DEPARTMENT OF DEFENSE SPECIFICATIONS

MIL-M-38510 - Microcircuits, General Specification for.
MIL-PRF-38534 - Hybrid Microcircuits, General Specification for.
MIL-PRF-38535 - Integrated Circuits (Microcircuits) Manufacturing, General Specification for.

(Copies of these documents are available online at http://assist.daps.dla.mil;quicksearch/ or www.dodssp.daps.mil or from the Standardization Document Order Desk, 700 Robbins Avenue, Building 4D, Philadelphia, PA 19111-5094.)

2.3 Non-Government publications. The following documents form a part of this document to the extent specified herein. Unless otherwise specified, the issues of these documents are those cited in the solicitation or contract.

AMERICAN SOCIETY OF MECHANICAL ENGINEERS (ASME)

ASME Y14.5M - Dimensioning and Tolerancing. (DoD adopted)

(Copies of these documents are available from www.asme.org or ASME, 3 Park Avenue, New York, NY 10016.)

ELECTRONIC INDUSTRIES ALLIANCE (EIA)

JEDEC Publication 95 - Registered and Standard Outlines for Solid State and Related Products.

(Copies of this document are available online at www.jedec.org/ or from the Electronics Industries Alliance, 2500 Wilson Boulevard, Arlington, VA 22201-3834).

2.4 Order of precedence. In the event of a conflict between the text of this document and the references cited herein, the text of this document takes precedence. Nothing in this document, however, supersedes applicable laws and regulations unless a specific exemption has been obtained.

3. DEFINITIONS

3.1 Definitions. For the purpose of this standard, the definitions contained in the DoD specifications and standards referenced in 2.2.1, and other DoD specifications and standards as applicable, should apply. The following definitions should also apply.

3.1.1 Electronic device case outline (package). The embodiment of the external geometric characteristics of a electronic device including dimensions and dimensional tolerances. Hereafter, the case outline will be referred to as a package.

3.1.2 Configuration. The relative disposition of the external elements of a package including lead form.

3.1.3 Package style. All packages whose generic design and nomenclature are identical.

3.1.4 Package type. A package with a unique case outline, configuration, materials (including bonding wire and die attach), piece parts (excluding preforms which differ only in size), and assembly processes. 1/

3.1.5 Chip carrier (CC) package. A rectangular or square package having terminals on all four sides of the package periphery.

3.1.6 Can package. A cylindrical shaped package with leads attached to one end.

3.1.7 In-line package (IP). A rectangular package having one row (or two or more parallel rows) of terminals oriented perpendicular to the package seating plane.

3.1.8 Flat package (FP). A rectangular or square package with leads parallel to base plane attached on two opposing sides of the package periphery.

3.1.9 Grid array (GA) package. A rectangular or square package with terminals attached perpendicular to a "major surface" in a grid matrix.

3.1.10 Index. A unique mechanical or visual (or both) package feature which (using package orientation rules in accordance with JEDEC Publication 95) identifies the location of the first terminal position, (e.g., reference mark, extended terminal, chamfer, tab, notch, flat, groove, etc.). The index location varies with different package styles, but only as specified herein.

3.1.11 Index area. The area in which all or a portion of the index must be located.

3.1.12 Base plane. The reference plane, parallel to the nominal seating plane, through the lowest plane on the body of a package.

3.1.13 Seating plane. The reference plane which designates the interface of the package terminals with the mounting surface to which the terminals are attached, (for DIP's, see 5.2.4).

3.1.14 Coplanarity. Coplanarity is the condition of two or more surfaces having all elements in one plane, (e.g., the seating plane of all the leads on a electronic device, see 5.2.7).

1/ This definition of package type is taken from MIL-PRF-38535, appendix A. Note, however, that this standard does not specify package interior attributes.

3.1.15 Dimension. A numerical value expressed in appropriate units of measure and indicated on a drawing and in other documents along with lines, symbols, and notes to define the size or geometric characteristic, or both, of a part or part feature. 2/

3.1.16 Reference dimension. A dimension, usually without tolerance, used for information purposes only. It is considered auxiliary information and does not govern production or inspection operations. A reference dimension is a repeat of a dimension or is derived from other values shown on the drawing or on related drawings. 2/

3.1.17 Basic dimension (BSC). A numerical value used to describe the theoretically exact size, profile, orientation, or location of a feature or datum target. It is the basis from which permissible variations are established by tolerances on other dimensions, in notes, or in feature control frames. 2/

3.1.18 True position. The theoretically exact location of a point, line, or plane of a feature established by basic dimensions in relationship with a datum reference(s) or other feature. 2/

3.1.19 Datum. A theoretically exact point, axis, or plane derived from the true geometric counterpart of a specified datum feature. A datum is the origin from which the location or geometric characteristics of features of a part are established. 2/

3.1.20 Land. A portion of a conductive pattern usually, but not exclusively, used for the connection, or attachment, or both of components.

3.1.21 Land pattern. A combination of lands intended for the mounting and interconnection of a particular component.

3.1.22 Lead position overlay. An optical gauge used to measure lead dimensions, land pattern, and other package feature-relating requirements.

3.1.23 Cavity-up, cavity-down. The orientation of the package body cavity opening, away from the seating plane for cavity-up or toward the seating plane for cavity-down (see 5.2.8).

3.1.24 Tailoring. The process by which package requirements are evaluated to determine the extent to which they are most suitable for military systems and equipment applications; and modified as permitted by this standard, and as necessary to ensure application suitability (see 6.2).

2/ From ASME Y14.5M, see 2.2.

3.1.25 Dimensioning symbols. The dimensioning symbols used are as follows:

A: Body dimensions.
∅b: Terminal lead diameters.
b: Terminal lead widths.
c: Terminal lead thicknesses.
∅D: Body diameters.
D: Body lengths.
E: Body widths.
e: Terminal lead spacing.
F: Flange dimensions.
k: Index dimensions, length.
L: Terminal lead lengths.
Q: Standoff height. The height from the seating plane to the base plane or a reference plane parallel to the seating plane.
S: Distance between terminal leads and the body end or body center lines.
α: Angular dimensions.
h: Chamfered corner dimension.
R: Radius Dimensions.

▬ : Straightness.

▱ : Flatness.

⌒ : Profile of a line.

⌓ : Profile of a surface.

⊥ : Perpendicularity.

⌖ : Position.

Ⓜ : At maximum material condition.

Ⓛ : At least material condition.

Ⓟ : Projected tolerance zone.

∅ : Diameter.

[e] : Basic dimension.

REF : Reference dimension.

▶—[A] : Datum feature.

[⌖ | .010 Ⓜ | E | L Ⓜ | G] : Feature control frame.

4. GENERAL REQUIREMENTS

4.1 Package design. Package design shall be in accordance with this standard.

4.2 Package terminal identification. Package terminal identification shall be in accordance with the applicable device specification.

4.3 Package index implementation. A permanent index shall be clearly visible on the top and, as an added option, bottom of a package. The index shall be used for locating terminal 1. The location of the index shall be as specified in the outline requirements for each package style (see table VI).

4.4 Package dimensions and symbols. The package dimensions shall be in accordance with this standard. All dimensions shall apply to assembled sealed packages. Symbols and tolerances shall be interpreted in accordance with ASME Y14.5M-1994 and this standard. Unless otherwise specified, the package design controlling dimension shall be the inch. For all new package designs after January 1, 1992, it shall be metric.

4.5 Dimension verification. Unless otherwise specified, dimensions identified by a single symbol, which are repeated at more than 15 package locations may be verified by measurement at 15 randomly selected locations on the package. All package dimensions may be verified using calibrated gauges, overlays, or other comparative dimension verification devices. These devices shall be designed to the limits of size and relative location of package features. These devices and their application shall be subject to the approval of the qualifying activity. Recorded variables data for out of tolerance package features shall be available for review by the qualifying activity.

4.6 Package material characteristics. Package material characteristics, including internal elements that contribute to the uniqueness of a package type, shall be in accordance with the requirements of the device specification.

4.7 Package descriptive designation system. This standard uses a descriptive designation system to communicate package identification (see figure 1). This system describes materials, terminal location, case outline style, lead form, terminal count, and options. A type designator has been constructed, using this system, for all packages in this standard (see tables VI and VII). The type designators for packages selected from this standard shall be referenced in applicable detail specifications. See the example on figure 2.

4.7.1 Case outline letter/Part or Identifying Number (PIN) designator. The PIN case outline letter designator shall be as specified herein and shall be referenced in applicable device specifications. The case outline designator may include numbers or letters with the following limitations:

a. The letters "I" and "O" shall not be used.

b. The numbers "0", and "1" shall not be used.

c. The letters X, Y, Z, U, T, M, N, and the numbers 4, 5, 6, 7, and 8 are undedicated "wildcards"; they may be used repeatedly, but only one time in a single device specification, see the example using the letter "X" on figure 2.

d. Blank spaces are not permitted.

4.8 Inactive for new design. The packages in table VII are inactive for new design. They are acceptable only for use in equipment designed or redesigned on or before the date indicated in the applicable footnote in table VII.

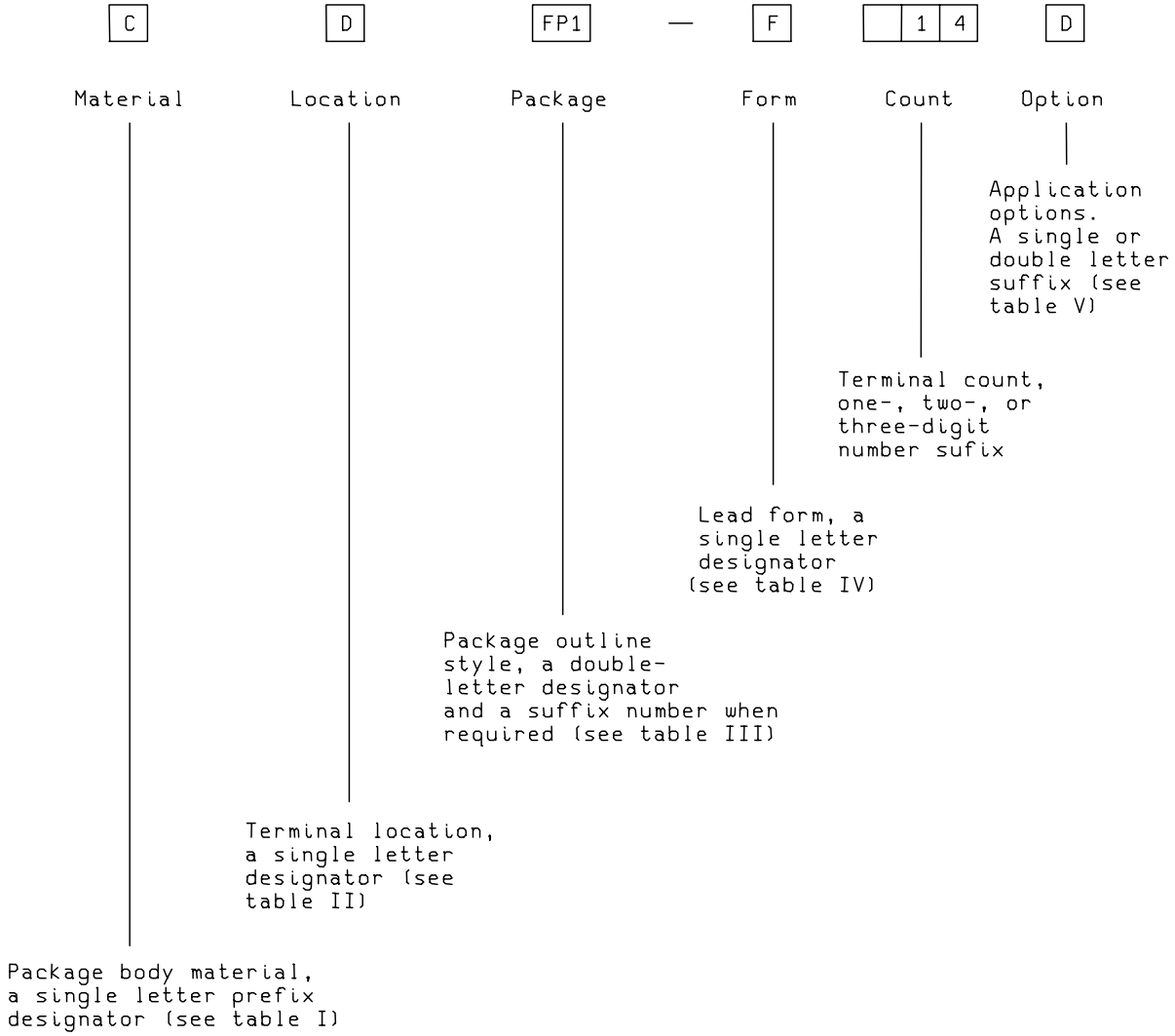

FIGURE 1. Package descriptive designation system.

TABLE I. Predominant package body material prefixes.

Code	Material
C	Cofired ceramic, metal-seal
G	Ceramic, glass-seal
L	Glass
M	Metal
X	Other

TABLE II. Terminal location prefixes.

Code	Name	Location
A	Axial	Terminals extend from one end in the direction of the major axis of a cylindrical or elliptical package.
B	Bottom	Terminals beneath the seating plane of the package.
D	Dual	Terminals in two parallel rows oriented perpendicular or parallel to the seating plane.
M	Matrix	Terminals in 3 or more rows and columns oriented perpendicular to the seating plane, parallel to each other.
Q	Quad	Terminals on all four sides of a square or rectangular package, orientated perpendicular or parallel to the seating plane.
S	Single	Terminals are on one surface of a square or rectangular package in a single row.
X	Other	Terminal location other than those described (see table V footnotes).
Z	Zig-zag	Terminals in two parallel rows oriented perpendicular to the seating plan arranged in a staggered configuration. Restrict to ZIP family.

TABLE III. Package outline style codes.

Code 1/	Style
CC	Chip-carrier package, square or rectangular body profile
CY	Cylinder or can package, round body profile
FM	Flange mount package, variable body profile
FP	Flat pack package, square or rectangular body profile
GA	Grid-array package, square or rectangular body profile
IP	In-line package, rectangular body profile (e.g., DIP/SIP/ZIP)
SS	Special-shape package

1/ The package outline style will be followed with a suffix number when additional differentiation is required.

TABLE IV. Lead-form (or terminal shape) suffixes.

Code	Form/shape	Description
F	Flat	A nonformed flat (nonround) lead extending parallel to the seating plane.
G	Gullwing	The "gullwing" lead is shaped as follows: 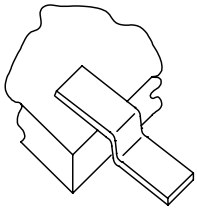
J	"J" bend	The "J" lead is shaped as follows: 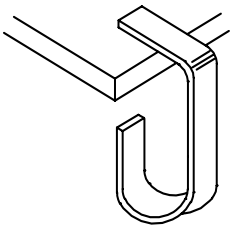
N	No lead	Metallized terminal pads located on the body of the package.
P	Pin/Peg	A tempered lead extending from the body of the package and intended for attachment to a plated through-hole in the land structure.
T	Through hole	A straight lead extending perpendicular to the seating plane.
U	"J" reversed	The reversed "J" lead is shaped as follows: 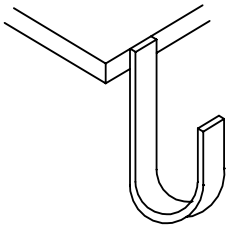
X	Other	A lead form or terminal shape other than those defined.

TABLE V. Package design options

Code	Options 1/
A	Additional terminal pads added on the top of leadless chip carrier style packages.
B	Cofired metal heat conduction pads; as specified herein or in the applicable military detail specification.
C	Cavity up
D	Cavity down
E	Window lid
G, H, K, L	Other; as specified in the applicable military detail specification.

1/ When option letters G, H, K, or L are used, they delineate packages that are the same style and terminal count but not the same in other ways such as dimension variations, terminal location within a GA matrix, or any package terminal attachment positions other than as specified herein.

1. SCOPE

1.1 Scope. This drawing documents two product assurance class levels consisting of high reliability (device classes Q and M) and space application (device class V). A choice of case outlines and lead finishes are available and are reflected in the Part or Identifying Number (PIN). When available, a choice of Radiation Hardness Assurance (RHA) levels are reflected in the PIN.

1.2 PIN. The PIN is as shown in the following example:

5962	-	XXXXX	01	M	E	X
Federal stock class designator	RHA designator (see 1.2.1)		Device type (see 1.2.2)	Device class designator (see 1.2.3)	Case outline (see 1.2.4)	Lead finish (see 1.2.5)

_____ V _____/
Drawing number

1.2.1 RHA designator. Device classes Q and V RHA marked devices meet the MIL-PRF-38535 specified RHA levels and are marked with the appropriate RHA designator. Device class M RHA marked devices meet the MIL-PRF-38535, appendix A specified RHA levels and are marked with the appropriate RHA designator. A dash (-) indicates a non-RHA device.

1.2.2 Device type(s). The device type(s) identify the circuit function as follows:

Device type	Generic number	Circuit function
01	XXXXX	XXXXXXXXXXXXXXXX

1.2.3 Device class designator. The device class designator is a single letter identifying the product assurance level as follows:

Device class	Device requirements documentation
M	Vendor self-certification to the requirements for MIL-STD-883 compliant, non-JAN class level B microcircuits in accordance with MIL-PRF-38535, appendix A
Q or V	Certification and qualification to MIL-PRF-38535

1.2.4 Case outline(s). The case outline(s) are as designated in MIL-STD-1835 and as follows:

Outline letter	Descriptive designator	Terminals	Package style
E	GDIP1-T16 or CDIP2-T16	16	Dual-in-Line
F	GDFP2-F16 or CDFP3-F16	16	Flat Package
X	CMGA2-P100G	100	Pin grid array
Y	CDIP2-T16	16	Dual-in-line
2	CQCC1-N20	20	Leadless chip carrier

1.2.5 Lead finish. The lead finish is as specified in MIL-PRF-38535 for device classes Q and V or MIL-PRF-38535, appendix A for device class M.

FIGURE 2. Example of a (scope) page from a device specification showing the identification/specification of case outlines (packages).

TABLE VI. Package case outline list.

Descriptive package type designator	Case outline letter	Requirement number, Configuration letter	1/ Dimensions reference letter	2/ θ_{JC} (°C/W)	Terminal count, Row-to-row spacing (inch)	Terminal pitch (inch)	3/ EIA similar package designation
Flat pack style 4/							
GDFP1-F10	H	101, A	F-4	22	10	.050	MS-033 AA
CDFP2-F10	H	101, B	F-4	22	10	.050	none
CDFP3-F10		101, B	F-4A	22	10	.050	MO-098 AA
GDFP1-F14	D	101, A	F-2	22	14	.050	MS-033 AB
CDFP2-F14	D	101, B	F-2	22	14	.050	none
CDFP3-F14		101, B	F-2A	22	14	.050	MO-098 AB
GDFP1-F16		101, A	F-13	22	16	.050	MO-070 AA
GDFP2-F16	F	101, A	F-5	22	16	.050	MS-033 AC
CDFP3-F16	F	101, B	F-5	22	16	.050	none
CDFP4-F16		101, B	F-5A	22	16	.050	MO-098 AC
GDFP1-F18		101, A	F-14	22	18	.050	MO-070 AB
GDFP2-F18		101, A	F-10	22	18	.050	MO-092 AD
GDFP1-F20		101, A	F-15	22	20	.050	MO-070 AC
GDFP2-F20	S	101, A	F-9	22	20	.050	MS-033 AD
CDFP3-F20	S	101, B	F-9	22	20	.050	none
CDFP4-F20		101, B	F-9A	22	20	.050	none
GDFP1-F24		101, A	F-16	22	24	.050	MO-070 AD
GDFP2-F24	K	101, A	F-6	22	24	.050	MS-033 AE
CDFP3-F24	K	101, B	F-6	22	24	.050	none
CDFP4-F24		101, B	F-6A	22	24	.050	none
GDFP1-F28		101, A	F-17	22	28	.050	MO-070 AE
GDFP2-F28		101, A	F-11	22	28	.050	MS-033 AF
CDFP3-F28		101, B	F-11A	22	28	.050	none
CDFP4-F28		101, B	F-12	22	28	.050	none
CDFP1-F32		101, B	F-18	22	32	.050	MO-115 AA
GDFP1-F48		101, A	F-19	22	48	.025	MO-146 AA
GDFP1-F56		101, A	F-20	22	56	.025	MO-146 AB
Flatpack style with gullwing leads 4/							
GDFP1-G10		117	FG-1	22	10	.050	none
GDFP1-G14		117	FG-2	22	14	.050	none
GDFP1-G16		117	FG-3	22	16	.050	none
GDFP1-G20		117	FG-4	22	20	.050	none

See footnotes at end of table VII.

TABLE VI. Package case outline list – Continued.

Descriptive package type designator	Case outline letter	Requirement number, Configuration letter	1/ Dimensions reference letter	2/ θ_{JC} (°C/W)	Terminal count, Row-to-row spacing (inch)	Terminal pitch (inch)	3/ EIA similar package designation
Dual-in-line package style 4/							
GDIP1-T8	P	102, A	D-4	28	8, .300	.100	MS-030 AA
CDIP2-T8	P	102, C	D-4	28	8, .300	.100	MS-015 AA
GDIP1-T14	C	102, A	D-1	28	14, .300	.100	MS-030 AB
CDIP2-T14	C	102, C	D-1	28	14, .300	.100	MS-015 AB
GDIP1-T16	E	102, A	D-2	28	16, .300	.100	MS-030 AC
CDIP2-T16	E	102, C	D-2	28	16, .300	.100	MS-015 AC
GDIP1-T18	V	102, A	D-6	28	18, .300	.100	MS-030 AD
CDIP2-T18	V	102, C	D-6	28	18, .300	.100	MS-015 AD
GDIP1-T20	R	102, A	D-8	28	20, .300	.100	MS-030 AE
CDIP2-T20	R	102, C	D-8	28	20, .300	.100	MS-015 AE
GDIP1-T22	W	102, A	D-7	28	22, .400	.100	MS-031 AA
CDIP2-T22	W	102, C	D-7	28	22, .400	.100	MS-015 BB
GDIP1-T24	J	102, A	D-3	28	24, .600	.100	MS-032 AA, MO-103 AA
CDIP2-T24	J	102, C	D-3	28	24, .600	.100	MS-015 CA
GDIP3-T24	L	102, A	D-9	28	24, .300	.100	MS-030 AF
CDIP4-T24	L	102, C	D-9	28	24, .300	.100	MS-015 AG
GDIP5-T24		102, A	D-11	28	24, .400	.100	none
CDIP6-T24		102, C	D-11	28	24, .400	.100	MS-015 BC
GDIP1-T28		102, A	D-10	28	28, .600	.100	MS-032 AB, MO-103 AB
CDIP2-T28		102, C	D-10	28	28, .600	.100	MS-015 CB
CDIP3-T28		102, C	D-15	28	28, .300	.100	MS-015 AH
GDIP4-T28		102, A	D-15	28	28, .300	.100	MS-030 AG,
GDIP1-T32		102, A	D-16	28	32, .600	.100	MS-032 AC, MO-103 AD
CDIP2-T32		102, C	D-16	28	32, .600	.100	MS-015 CC
GDIP1-T40	Q	102, A	D-5	28	40, .600	.100	MS-032 AD, MO-103 AC
CDIP2-T40	Q	102, C	D-5	28	40, .600	.100	MS-015 CE
GDIP1-T48		102, A	D-14	28	48, .600	.100	none
CDIP2-T48		102, C	D-14	28	48, .600	.100	MS-015 CF
GDIP1-T50		102, A	D-12	28	50, .900	.100	none
CDIP2-T50		102, C	D-12	28	50, .900	.100	MS-015 DA
CDIP1-T64		102, C	D-13	28	64, .900	.100	MS-015 DB

See footnotes at end of table VII.

TABLE VI. Package case outline list - Continued.

Descriptive package type designator	Case outline letter	Requirement number, Configuration letter	1/ Dimensions reference letter	2/ θ_{JC} (°C/W)	Terminal count, Row-to-row spacing (inch)	Terminal pitch (inch)	3/ EIA similar package designation
Can style 4/							
MACY1-X8	G	103	A1	70	8	α, β 45°	MO-002 AL
MACY1-X10	I	103	A2	65	10	α, β 36°	MO-006 AF
MACY1-X12		103	A3	65	12	α, β 30°	MO-006 AG
MACY1-X3		103	A4		3	α45°, β90°	TO-5, TO-39
Square leadless chip carrier style 4/							
CQCC1-N16		105	C-1	20	16	.050	MS-004 CA
CQCC2-N16		105	C-1A	20	16	.050	MS-004 CA
CQCC1-N20	2	105	C-2	20	20	.050	MS-004 CB
CQCC2-N20		105	C-2A	20	20	.050	MS-004 CB
CQCC1-N24		105	C-3	20	24	.050	MS-004 CH
CQCC2-N24		105	C-3A	20	24	.050	MS-004 CH
CQCC1-N28	3	105	C-4	20	28	.050	MS-004 CC
CQCC2-N28		105	C-4A	20	28	.050	MS-004 CC
CQCC1-N44		105	C-5	20	44	.050	MS-004 CD
CQCC1-N52		105	C-6	20	52	.050	MS-004 CE
CQCC1-N68		105	C-7	20	68	.050	MS-004 CF
CQCC1-N84		105	C-8	20	84	.050	MS-004 CG
Rectangular leadless chip carrier style 4/							
CQCC1-N18		105	C-9	20	18	.050	MO-042 AA
CQCC2-N18		105	C-9A	20	18	.050	MO-042 AA
CQCC3-N18		105	C-10	20	18	.050	MO-041 AC
CQCC4-N18		105	C-10A	20	18	.050	MO-041 AC
CQCC3-N20		105	C-13	20	20	.050	MO-041 AD
CQCC4-N20		105	C-13A	20	20	.050	MO-041 AD
CQCC3-N28		105	C-11	20	28	.050	MO-041 AA
CQCC4-N28		105	C-11A	20	28	.050	MO-041 AA
CQCC1-N32		105	C-12	20	32	.050	MO-041 AB
CQCC2-N32		105	C-12A	20	32	.050	MO-041 AB
CDCC1-N4		105	C-14	20	4	.050	MO-041 BA
CDCC1-N6		105	C-15	20	6	.050	MO-041 BB

See footnotes at end of table VII.

TABLE VI. Package case outline list - Continued.

Descriptive package type designator	Case outline letter	Requirement number, Configuration letter	1/ Dimensions reference letter	2/ θ_{JC} (°C/W)	Terminal count, Row-to-row spacing (inch)	Terminal pitch (inch)	3/ EIA similar package designation
Gullwing lead chip carrier style 4/							
GQCC1-G44		106	C-G1	20	44	.050	MO-084 AB
GQCC1-G68		106	C-G2	20	68	.050	MO-084 AD
GQCC1-G84		106	C-G3	20	84	.050	MO-084 AE
CQCC1-G132		107	C-G7	20	132	.025	MO-104 AA
"J" lead chip carrier style 4/							
GQCC1-J28		108	C-J7	20	28	.050	MO-087 AA
CQCC2-J28		109	C-J9	20	28	.050	MO-107 AA
GQCC1-J44		108	C-J1	20	44	.050	MO-087 AB
CQCC2-J44		109	C-J4	20	44	.050	MO-107 AB
GQCC1-J52		108	C-J8	20	52	.050	MO-087 AC
CQCC2-J52		109	C-J10	20	52	.050	MO-107 AC
GQCC1-J68		108	C-J2	20	68	.050	MO-087 AD
CQCC2-J68		109	C-J5	20	68	.050	MO-107 AD
GQCC1-J84		108	C-J3	20	84	.050	MO-087 AE
CQCC2-J84		109	C-J6	20	84	.050	MO-107 AE
Unformed-lead chip carrier style 4/							
CQCC1-F84		110	C-U1	20	84	.025	MO-090 AA
CQCC1-F100		110	C-U2	20	100	.025	MO-090 AF
CQCC1-F132		110	C-U3	20	132	.025	MO-090 AB
CQCC1-F144		110	C-U4	20	144	.025	MO-090 AC
CQCC1-F172		110	C-U5	20	172	.025	MO-090 AD
CQCC1-F196		110	C-U6	20	196	.025	MO-090 AE
Grid array style 4/ 5/							
CMGA1-PN		111	P-AA	20	81 MAX	.100	MO-067 AA
CMGA2-PN		111	P-AB	20	100 MAX	.100	MO-067 AB
CMGA3-PN		111	P-AC	20	121 MAX	.100	MO-067 AC
CMGA4-PN		111	P-AD	20	144 MAX	.100	MO-067 AD
CMGA5-PN		111	P-AE	20	169 MAX	.100	MO-067 AE
CMGA6-PN		111	P-AF	20	196 MAX	.100	MO-067 AF
CMGA7-PN		111	P-AG	20	225 MAX	.100	MO-067 AG
CMGA8-PN		111	P-AH	20	256 MAX	.100	MO-067 AH
CMGA9-PN		111	P-AJ	20	289 MAX	.100	MO-067 AJ
CMGA10-PN		111	P-AK	20	324 MAX	.100	MO-067 AK

See footnotes at end of table VII.

TABLE VI. Package case outline list - Continued.

Descriptive package type designator	Case outline letter	Requirement number, Configuration letter	1/ Dimensions reference letter	2/ θ_{JC} (°C/W)	Terminal count, Row-to-row spacing (inch)	Terminal pitch (inch)	3/ EIA similar package designation
Grid array style 4/ 5/							
CMGA11-PN		111	P-AL	20	361 MAX	.100	MO-067 AL
CMGA12-PN		111	P-AM	20	400 MAX	.100	MO-067 AM
CMGA13-PN		111	P-BA	20	81 MAX	.100	MO-066 AA
CMGA14-PN		111	P-BB	20	100 MAX	.100	MO-066 AB
CMGA15-PN		111	P-BC	20	121 MAX	.100	MO-066 AC
CMGA16-PN		111	P-BD	20	144 MAX	.100	MO-066 AD
CMGA17-PN		111	P-BE	20	169 MAX	.100	MO-066 AE
CMGA18-PN		111	P-BF	20	196 MAX	.100	MO-066 AF
CMGA19-PN		111	P-BG	20	225 MAX	.100	MO-066 AG
CMGA20-PN		111	P-BH	20	256 MAX	.100	MO-066 AH
CMGA21-PN		111	P-BJ	20	289 MAX	.100	MO-066 AJ
CMGA22-PN		111	P-BK	20	324 MAX	.100	MO-066 AK
CMGA23-PN		111	P-BL	20	361 MAX	.100	MO-066 AL
CMGA24-PN		111	P-BM	20	400 MAX	.100	MO-066 AM
Staggered grid array style 4/ 5/							
CMGA25-PN		116	P-CA	20	145 MAX	.100	MO-128 AA
CMGA26-PN		116	P-CB	20	181 MAX	.100	MO-128 AB
CMGA27-PN		116	P-CC	20	221 MAX	.100	MO-128 AC
CMGA28-PN		116	P-CD	20	265 MAX	.100	MO-128 AD
CMGA29-PN		116	P-CE	20	313 MAX	.100	MO-128 AE
CMGA30-PN		116	P-CF	20	365 MAX	.100	MO-128 AF
CMGA31-PN		116	P-CG	20	421 MAX	.100	MO-128 AG
CMGA32-PN		116	P-CH	20	481 MAX	.100	MO-128 AH
CMGA33-PN		116	P-CJ	20	545 MAX	.100	MO-128 AJ
CMGA34-PN		116	P-CK	20	613 MAX	.100	MO-128 AK
CMGA35-PN		116	P-CL	20	685 MAX	.100	MO-128 AL
CMGA36-PN		116	P-CM	20	761 MAX	.100	MO-128 AM
CMGA37-PN		116	P-CN	20	841 MAX	.100	MO-128 AN
CMGA38-PN		116	P-CP	20	1013 MAX	.100	MO-128 AP
CMGA39-PN		116	P-CQ	20	1301 MAX	.100	MO-128 AQ

See footnotes at end of table VII.

TABLE VI. Package case outline list - Continued.

Descriptive package type designator	Case outline letter	Requirement number, Configuration letter	1/ Dimensions reference letter	2/ θ_{JC} (°C/W)	Terminal count, Row-to-row spacing (inch)	Terminal pitch (inch)	3/ EIA similar package designation
Flange mount style 4/							
MBFM1-P2		112, A	AA		2	.430	TO-3
MBFM2-P2		112, A	AB		2	.430	TO-3
MBFM3-P2		112, A	AC		2	.430	TO-3
MBFM4-P2		112, B	AD		2	.200	TO-66
MBFM1-P15		112, C	AE		15	22.5°	MO-097
Dual leadless chip carrier style 4/							
CDCC1-N28		113	DL-1	20	28	.050	MO-126 AA
CDCC1-N32		113	DL-2	20	32	.050	MO-126 AB
CDCC1-N20		113	DL-3	20	20	.050	MO-126 AC
CDCC2-N20		113	DL-4	20	20	.050	MO-144 AA
CDCC1-N4		105	C-14	20	4	.050	MO-041 BA
CDCC1-N6		105	C-15	20	6	.050	MO-041 BB
Quad leaded chip carrier style with non-conductive tie bar 4/							
CQCC2-F100		114	C-T1	20	100	.025	MO-113 AD
CQCC2-F132		114	C-T2	20	132	.025	MO-113 AC
CQCC2-F164		114	C-T3	20	164	.025	MO-113 AA
CQCC2-F172		114	C-T4	20	172	.025	MO-113 AE
CQCC2-F196		114	C-T5	20	196	.025	MO-113 AB
Zig-zag in-line package style 4/							
CZIP1-T20		115	Z-1		20, 2.54 mm	2.54 mm	MO-176 AA
CZIP1-T24		115	Z-2		24, 2.54 mm	2.54 mm	MO-176 AB
CZIP1-T28		115	Z-3		28, 2.54 mm	2.54 mm	MO-176 AC
Bottom terminal chip carrier style 4/							
CBCC1-N3		118	C-B1		3		TO-276 AA
CBCC2-N3		118	C-B2		3		TO-276 AB
CBCC3-N3		118	C-B3		3		TO-276 AC
Single row flange mount style 4/							
MSFM1-P3		119	AA		3	.100	TO-257
MSFM2-P3		119	BB		3	.150	TO-254
MSFM3-P3		119	CC		3	.200	TO-258

See footnotes at end of table VII.

TABLE VII. Inactive package case outline list.
The case outlines in this table are inactive for new design.

Descriptive package type designator	Case outline letter	Requirement number, Configuration letter	1/ Dimensions reference letter	2/ θ_{JC} (°C/W)	Terminal count, Row-to-row spacing (inch)	Terminal pitch (inch)	3/ EIA similar package designation
Flat pack style 4/							
GDFP4-F14 6/	B	101, C	F-3	22	14	.050	TO-85
GDFP5-F14 6/	A	101, C	F-1	22	14	.050	TO-86
CDFP6-F14 6/	A	101, D	F-1	22	14	.050	TO-95
CDFP5-F20 6/	S	101, D	F-9	22	20	.050	none
GDFP5-F24 6/	K	101, C	F-6	22	24	.050	MO-070 AD
CDFP6-F24 6/	K	101, D	F-6	22	24	.050	none
GDFP7-F24 6/		101, C	F-8	22	24	.050	MO-019 AA
CDFP8-F24 6/		101, D	F-8	22	24	.050	none
Dual-in-line package style 4/							
CDIP3-T8 7/	P	102, B	D-4	28	8, .300	.100	none
CDIP3-T14 7/	C	102, B	D-1	28	14, .300	.100	none
CDIP3-T16 7/	E	102, B	D-2	28	16, .300	.100	none
CDIP3-T18 7/	V	102, B	D-6	28	18, .300	.100	none
CDIP3-T20 7/	R	102, B	D-8	28	20, .300	.100	none
CDIP3-T22 7/	W	102, B	D-7	28	22, .400	.100	none
CDIP7-T24 7/	J	102, B	D-3	28	24, .600	.100	none
CDIP8-T24 7/	L	102, B	D-9	28	24, .300	.100	none
CDIP9-T24 7/		102, B	D-11	28	24, .400	.100	none
CDIP4-T28 7/		102, B	D-10	28	28, .600	.100	none
CDIP3-T40 7/	Q	102, B	D-5	28	40, .600	.100	none
CDIP3-T50 7/		102, B	D-12	28	50, .900	.100	none
Single-in-line package style							
CSIP1-T3 7/		104	S1	---	3	.050	TO-260

See footnotes at end of table.

TABLE VII. Inactive package case outline list – Continued.

1/ See dimension tables herein.
2/ The "base-line" values shown are worst case (MEAN + 2σ) for a 60 x 60 mil microcircuit device silicon die and applicable for devices with die sizes up to 14400 square mils. For device die sizes greater than 14400 square mils use the following values; dual-in-line, 11°C/W; chip carrier, 10°C/W; flat pack, 10°C/W; pin grid array, 10°C/W.
3/ Caution. The Electronic Industries Alliance (EIA) similar package may change. The original or changed package may not satisfy device specification requirements or the requirements of this standard. Therefore, do not use the EIA similar package designation for item acquisition; it is for information only.
4/ Packages shall be selected from tables VI and VII by reference to the "descriptive package type designator" which, in turn, shall be referenced in device specifications in accordance with the example depicted in figure 2. The example shows how to integrate a descriptive designator, a case outline letter, and a PIN. There are circumstances when a package with multiple outline configurations, each identified with the same dimension reference number, will have all outline configurations considered interchangeable and acceptable without preference, see column 2 of tables VI and VII and 3.1.2. A package such as above shall be specified in device specifications by assigning the same case outline letter to each outline configuration, see case outline letter "H" in the figure 2 example. Conversely, when it is desired not to accept certain outline configuration combinations as interchangeable, use case outline letters X, Y, Z, U, T, M, N, and numbers 4, 5, 6, 7 and 8 to differentiate configurations. These letters and numbers are also used for all the packages in this standard that do not have a dedicated case outline letter, see 4.7.1.
5/ The suffix letter "N" shall be substituted with a specified terminal count. When two or more grid array packages are used in the same device specification, and are identical except for pin location, each package shall be separately identified, see table V.
6/ Inactive for new design. Acceptable only for use in equipment designed or redesigned on or before 29 November 1986.
7/ Inactive for new design. Acceptable only for use in equipment designed or redesigned on or before 15 May 1992.

5. DETAILED REQUIREMENTS

5.1 Package styles and package types. Package styles and package types are listed in tables VI and VII with brief descriptions.

5.2 Unique package features. Unique package features are depicted as follows.

5.2.1 Flat pack end leads. Flat packs which have leads extending from the ends of the body may have different lead configurations as shown on figure 3. Dimension α applies only to that portion of the lead within dimension E which bends into the body.

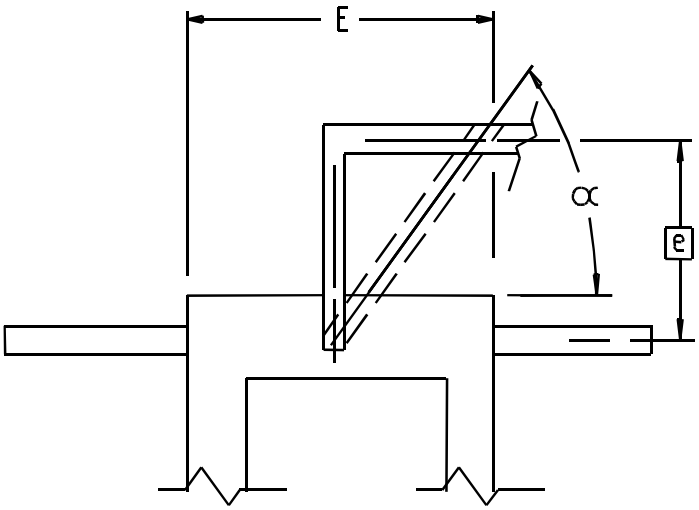

FIGURE 3. Lead bend angle.

5.2.2 Glass sealed flat pack minimum S1 dimension. The minimum limit of dimension S1 shall be either .000 (0.00 mm) or .005 (0.13 mm) depending on what lead configuration is used (see figure 4). In example A, the minimum limit is .005 (0.13 mm). In example B, if the lead bends toward the cavity within one lead width as shown, the minimum limit is .000 (0.00 mm); otherwise the criteria for example A shall apply. For metal-sealed bottom-brazed leads, dimension S1 shall be measured from the edge of the furthest extension of the metal pad or lead, whichever is closest to the corresponding edge of the package body.

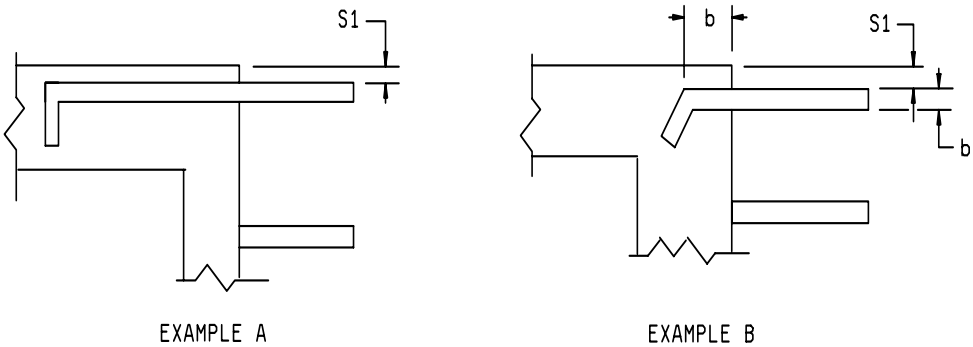

FIGURE 4. Lead space from package end.

5.2.3 DIP lead row center dimension eA. Dimension eA on DIP outlines shall be measured at the center of the lead bends (see figure 5) or at the centerline of the lead when α is 90°. For side-brazed leads, this dimension shall be measured at the centerlines of the leads.

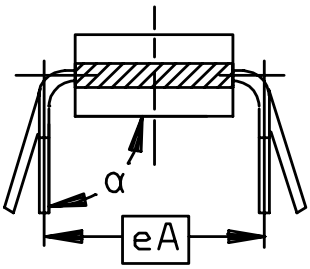

FIGURE 5. Lead row center dimension.

5.2.4 DIP dimensions L and Q. Dimensions L and Q on DIP style packages shall be measured from the lead tips and base plane to the seating plane (see figure 6). The seating plane is located at the lowest point on the lead at which the lead width exceeds .040 inch (1.02 mm) minimum excluding any half leads at the package ends. (The illustration shows a tapered lead at the seating plane, other lead shapes in this area are also acceptable, see details B, C, and D on the DIP drawings.)

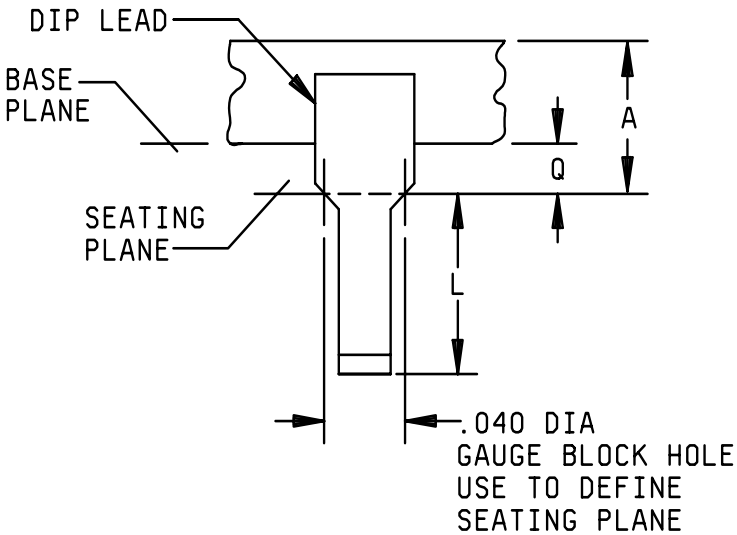

FIGURE 6. DIP standoff dimension Q.

5.2.5 DIP end variations dimension S1. For all DIP configurations, dimension S1 shall be measured from the edge of the furthest extension of the metal pad or lead whichever is closest to the end of the body (see figure 7).

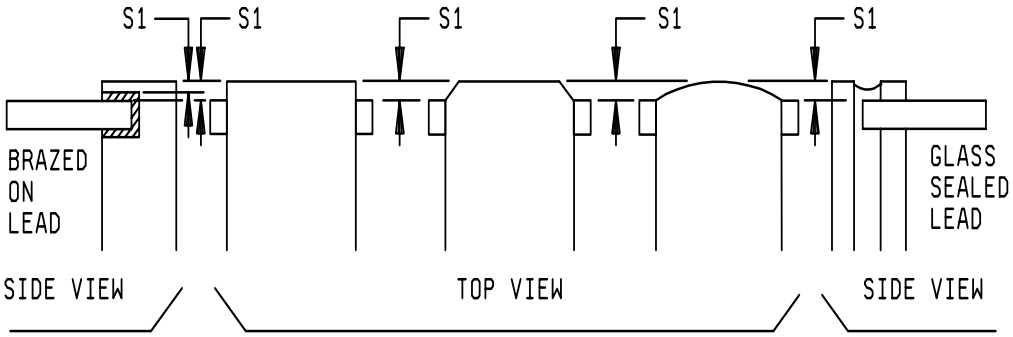

FIGURE 7. DIP package end variations.

5.2.6 Leadless chip carrier (LCC) castellation irregularities. Analysis of the chip carrier castellation by measurement requires that all surface irregularities of the castellation (the shaded area) be within dimensions L3 and B3 as delineated on figure 8. It is also required that the castellation be located within the LCC terminal pad width, exclusive of the annular ring, as shown on figure 8.

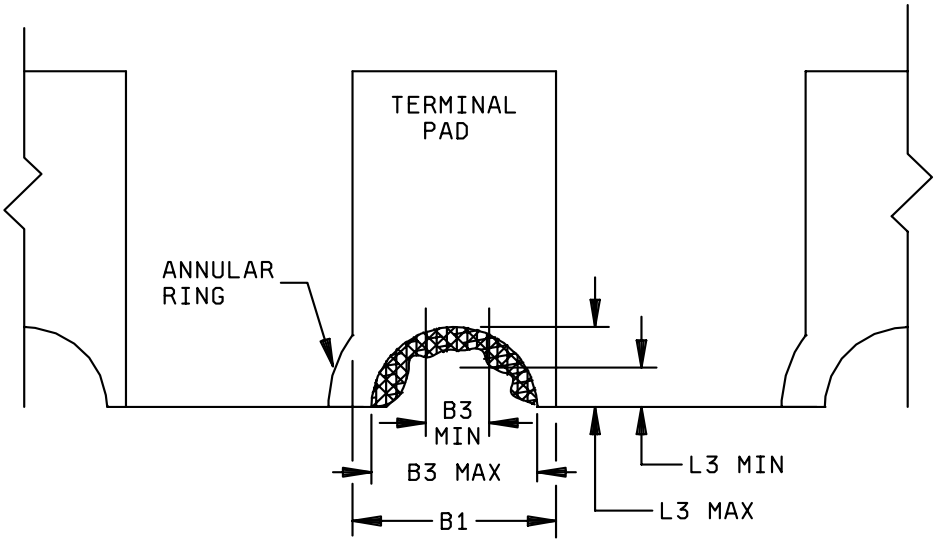

FIGURE 8. Measurement and alignment of LCC castellation.

5.2.7 Coplanarity deviation. The coplanarity deviation of all terminal contact points, as defined by the device seating plane, shall be determined for surface mounted devices. Measurements shall be made from the device seating plane (see figure 9). Regardless of package size, any device with one or more terminals that exceed the specified coplanarity deviations shall constitute a failure.

ANY FORMED LEAD OR LEADLESS
SURFACE MOUNTED DEVICE

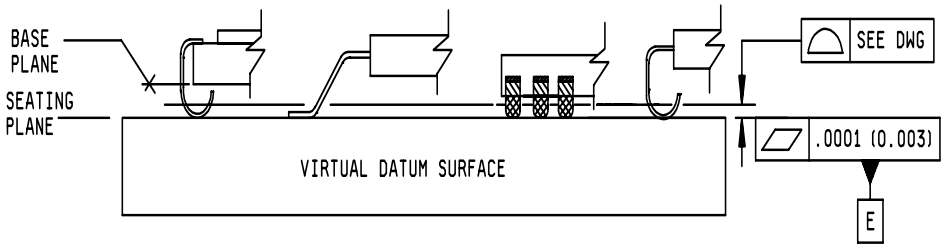

FIGURE 9. Coplanarity deviation.

5.2.8 Package cavity orientation. Unless otherwise specified herein, for most packages, cavity orientation (see figure 10) is standard in the "cavity-up" position. When a particular package style includes optional cavity orientation, such as cavity-down, the cavity-down option shall be specified by adding a suffix D to the terminal- count part of the descriptive type designator (see figure 1).

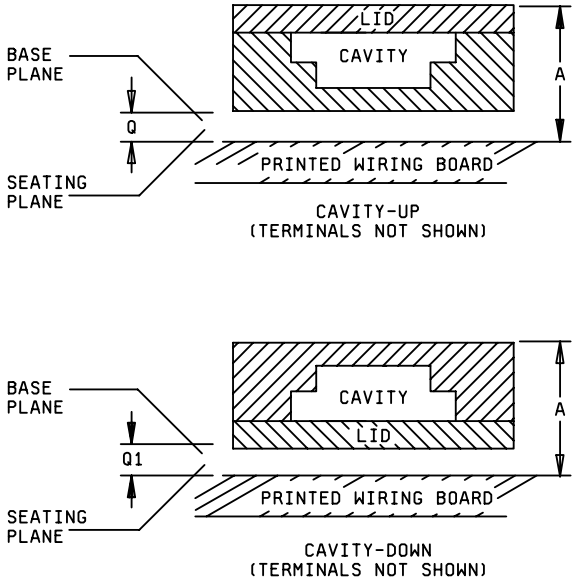

FIGURE 10. Package cavity orientation.

5.2.9 Package drawings. Detailed package drawings and dimensional criteria shall be as specified in the individual style requirements.

5.3 Dimensional listings in the individual requirements. Dashes are used to indicate “not specified” and blanks are used to indicate “not applicable”.

6. NOTES

(This section contains information of a general or explanatory nature which may be helpful, but is not mandatory.)

6.1 Intended use. Packages conforming to the requirements of this standard are intended for use in electronic equipment.

6.2 Tailoring guidance for contractual application. For purposes of this standard, tailoring refers to the selection of optional package features when they are specified in the individual style requirements. For example, one may select top and bottom terminals and thermal conduction pads on certain chip carrier packages.

6.3 Subject term (key word) listing.

ANSI
Basic dimension
Ceramic
Classification
EIA
Gullwing
Interchangeability
Lead position overlay
Package style
Quad
Tailoring
Type designator

6.4 Package cross-reference list. The following table provides a cross-reference of package type numbers (and configuration numbers where applicable) that were listed in appendix C of MIL-M-38510, to the package descriptive type designators listed in this standard. Packages were deleted from appendix C of MIL-M-38510 with the publication of this standard. The appendix C numbers are in alphanumeric sequence; underlined descriptive type designators are inactive (see table VIII).

TABLE VIII. Package cross-reference list.

Old MIL-M-38510 appendix C type no./ config. no.	New descriptive package type designator
A1	MACY1-X8
A2	MACY1-X10
A3	MACY1-X12
C-1	CQCC1-N16
C-10	CQCC3-N18
C-10A	CQCC4-N18
C-11	CQCC3-N28
C-11A	CQCC4-N28
C-12	CQCC1-N32
C-12A	CQCC2-N32
C-13	CQCC3-N20
C-13A	CQCC4-N20
C-1A	CQCC2-N16
C-2	CQCC1-N20
C-2A	CQCC2-N20
C-3	CQCC1-N24
C-3A	CQCC2-N24
C-4	CQCC1-N28
C-4A	CQCC2-N28
C-5	CQCC1-N44
C-6	CQCC1-N52
C-7	CQCC1-N68
C-8	CQCC1-N84
C-9	CQCC1-N18
C-9A	CQCC2-N18
C-G1	GQCC1-G44
C-G2	GQCC1-G68
C-G3	GQCC1-G84
C-G7	CQCC1-G132
C-J1	GQCC1-J44
C-J10	CQCC2-J52
C-J2	GQCC1-J68
C-J3	GQCC1-J84
C-J4	CQCC2-J44
C-J5	CQCC2-J68
C-J6	CQCC2-J84
C-J7	GQCC1-J28

Old MIL-M-38510 appendix C type no./ config. no.	New descriptive package type designator
C-J8	GQCC1-J52
C-J9	CQCC2-J28
C-U1	CQCC1-F84
C-U2	CQCC1-F100
C-U3	CQCC1-F132
C-U4	CQCC1-F144
C-U5	CQCC1-F172
C-U6	CQCC1-F196
D-1, 3	CDIP2-T14
D-1, 1	GDIP1-T14
D-10, 3	CDIP2-T28
D-10, 1	GDIP1-T28
D-11, 3	CDIP6-T24
D-11, 1	GDIP5-T24
D-12, 3	CDIP2-T50
D-12, 1	GDIP1-T50
D-13, 3	CDIP1-T64
D-14, 3	CDIP2-T48
D-14, 1	GDIP1-T48
D-15, 3	CDIP3-T28
D-15, 1	GDIP4-T28
D-2, 3	CDIP2-T16
D-2, 1	GDIP1-T16
D-3, 3	CDIP2-T24
D-3, 1	GDIP1-T24
D-4, 3	CDIP2-T8
D-4, 1	GDIP1-T8
D-5, 3	CDIP2-T40
D-5, 1	GDIP1-T40
D-6, 3	CDIP2-T18
D-6, 1	GDIP1-T18
D-7, 3	CDIP2-T22
D-7, 1	GDIP1-T22
D-8, 3	CDIP2-T20
D-8, 1	GDIP1-T20
D-9, 3	CDIP4-T24
D-9, 1	GDIP3-T24

TABLE VIII. Package cross-reference list - Continued.

Old MIL-M-38510 appendix C type no./ config. no.	New descriptive package type designator
F-10, 1	GDFP2-F18
F-11, 1	GDFP2-F28
F-11A, 2	CDFP3-F28
F-12, 2	CDFP4-F28
F-13, 1	GDFP1-F16
F-14, 1	GDFP1-F18
F-15, 1	GDFP1-F20
F-16, 1	GDFP1-F24
F-17, 1	GDFP1-F28
F-2, 1	GDFP1-F14
F-2, 2	CDFP2-F14
F-2A, 2	CDFP3-F14
F-4, 1	GDFP1-F10
F-4, 2	CDFP2-F10
F-4A, 2	CDFP3-F10
F-5, 1	GDFP2-F16
F-5, 2	CDFP3-F16
F-5A, 2	CDFP4-F16
F-9, 1	GDFP2-F20
F-9, 2	CDFP3-F20
F-9A, 2	CDFP4-F20
F-6, 1	GDFP2-F24
F-6 2	CDFP3-F24
F-6A 2	CDFP4-F24

Old MIL-M-38510 appendix C type no./ config. no.	New descriptive package type designator
P-AA	CMGA1-PN
P-AB	CMGA2-PN
P-AC	CMGA3-PN
P-AD	CMGA4-PN
P-AE	CMGA5-PN
P-AF	CMGA6-PN
P-AG	CMGA7-PN
P-AH	CMGA8-PN
P-AJ	CMGA9-PN
P-AK	CMGA10-PN
P-AL	CMGA11-PN
P-AM	CMGA12-PN
P-BA	CMGA13-PN
P-BB	CMGA14-PN
P-BC	CMGA15-PN
P-BD	CMGA16-PN
P-BE	CMGA17-PN
P-BF	CMGA18-PN
P-BG	CMGA19-PN
P-BH	CMGA20-PN
P-BJ	CMGA21-PN
P-BK	CMGA22-PN
P-BL	CMGA23-PN
P-BM	CMGA24-PN

INACTIVE	
D-1, 2	CDIP3-T14
D-10, 2	CDIP4-T28
D-11, 2	CDIP9-T24
D-12, 2	CDIP3-T50
D-2, 2	CDIP3-T16
D-3, 2	CDIP7-T24
D-4, 2	CDIP3-T8
D-5, 2	CDIP3-T40
D-6, 2	CDIP3-T18
D-7, 2	CDIP3-T22
D-8, 2	CDIP3-T20
D-9, 2	CDIP8-T24

INACTIVE	
F-1, 4	CDFP6-F14
F-1, 3	GDFP5-F14
F-3, 3	GDFP4-F14
F-6, 4	CDFP6-F24
F-6, 3	GDFP5-F24
F-8, 4	CDFP8-F24
F-8, 3	GDFP7-F24
F-9, 4	CDFP5-F20

6.5 Plastic encapsulated microcircuit packages. The plastic encapsulated microcircuit packages listed in table IX are recommended for use in those DoD systems that are using plastic packages. The dimensions and tolerances for the plastic packages listed in table IX are available for use in the JEP-95 outline shown and should be directly invoked from that document.

TABLE IX. Plastic encapsulated microcircuit packages.

Descriptive package type designator	Terminal count	Row-to-row spacing/body width	Terminal pitch	EIA JEP-95 standard outline and variation
Dual-in-line package				
PDIP-T	8	.300 "	.100 "	MS-001 BA
PDIP-T	14	.300 "	.100 "	MS-001 AA
PDIP-T	16	.300 "	.100 "	MS-001 BB
PDIP-T	18	.300 "	.100 "	MS-001 BC
PDIP-T	20	.300 "	.100 "	MS-001 AD
PDIP-T	22	.400 "	.100 "	MS-010 AA
PDIP-T	24	.300 "	.100 "	MS-001 AF
PDIP-T	24	.600 "	.100 "	MS-011 AA
PDIP-T	28	.300 "	.100 "	MS-001 BF
PDIP-T	28	.600 "	.100 "	MS-011 AB
PDIP-T	40	.600 "	.100 "	MS-011 AC
PDIP-T	48	.600 "	.100 "	MS-011 AD
Dual small outline package, gullwing lead				
PDSO-G	8	3.75 MM	1.27 MM	MS-012 AA
PDSO-G	14	3.75 MM	1.27 MM	MS-012 AB
PDSO-G	16	3.75 MM	1.27 MM	MS-012 AC
PDSO-G	16	7.50 MM	1.27 MM	MS-013 AA
PDSO-G	18	7.50 MM	1.27 MM	MS-013 AB
PDSO-G	20	7.50 MM	1.27 MM	MS-013 AC
PDSO-G	24	7.50 MM	1.27 MM	MS-013 AD
PDSO-G	28	7.50 MM	1.27 MM	MS-013 AE
Dual small outline package, J-bend lead				
PDSO-J	20 1/	.300 "	.050 "	MS-023 AB
PDSO-J	24 1/	.300 "	.050 "	MS-023 AC
PDSO-J	28	.300 "	.050 "	MS-023 AD
PDSO-J	40	.400 "	.050 "	MS-027 AF

TABLE IX. Plastic encapsulated microcircuit packages - Continued.

Descriptive package type designator	Terminal count	Row-to-row spacing/body width	Terminal pitch	EIA JEP-95 standard outline and variation
Quad chip carrier package, J-bend lead				
PQCC-J	20	.353 "	.050 "	MS-018 AA
PQCC-J	28	.453 "	.050 "	MS-018 AB
PQCC-J	32	.450 " x .550 "	.050 "	MS-016 AE
PQCC-J	44	.653 "	.050 "	MS-018 AC
PQCC-J	68	.954 "	.050 "	MS-018 AE
PQCC-J	84	1.154 "	.050 "	MS-018 AF
Quad flatpack, gullwing lead				
PQFP-G	44	10 MM	0.80 MM	MS-022 AB
PQFP-G	64	14 MM	0.80 MM	MS-022 BE
PQFP-G	80	20 x 14 MM	0.80 MM	MS-022 GB-1
PQFP-G	100	20 x 14 MM	0.65 MM	MS-022 GC-1
PQFP-G	120	28 MM	0.80 MM	MS-022 DA-1
PQFP-G	128	28 MM	0.80 MM	MS-022 DB-1
PQFP-G	144	28 MM	0.65 MM	MS-022 DC-1
PQFP-G	160	28 MM	0.65 MM	MS-022 DD-1

1/ Depopulated from a 26 terminal dimensioned packaged.

6.6 Changes from previous issue. Marginal notations are not used in this revision to identify changes with respect to the previous issue due to the extent of the changes.

Custodians:
Army - CR
Navy - EC
Air Force - 11
NASA - NA
DLA - CC

Preparing activity:
DLA - CC

Review activities:
Army - MI, SM
Navy - AS, CG, MC, SH, TD
Air Force – 03, 19, 99

(Project 5962-2050)

NOTE: The activities listed above were interested in this document as of the date of this document. Since organizations and responsibilities can change, you should verify the currency of the information above using the ASSIST Online database at www.dodssp.daps.mil.

REQUIREMENT 101A

FLAT PACK STYLE

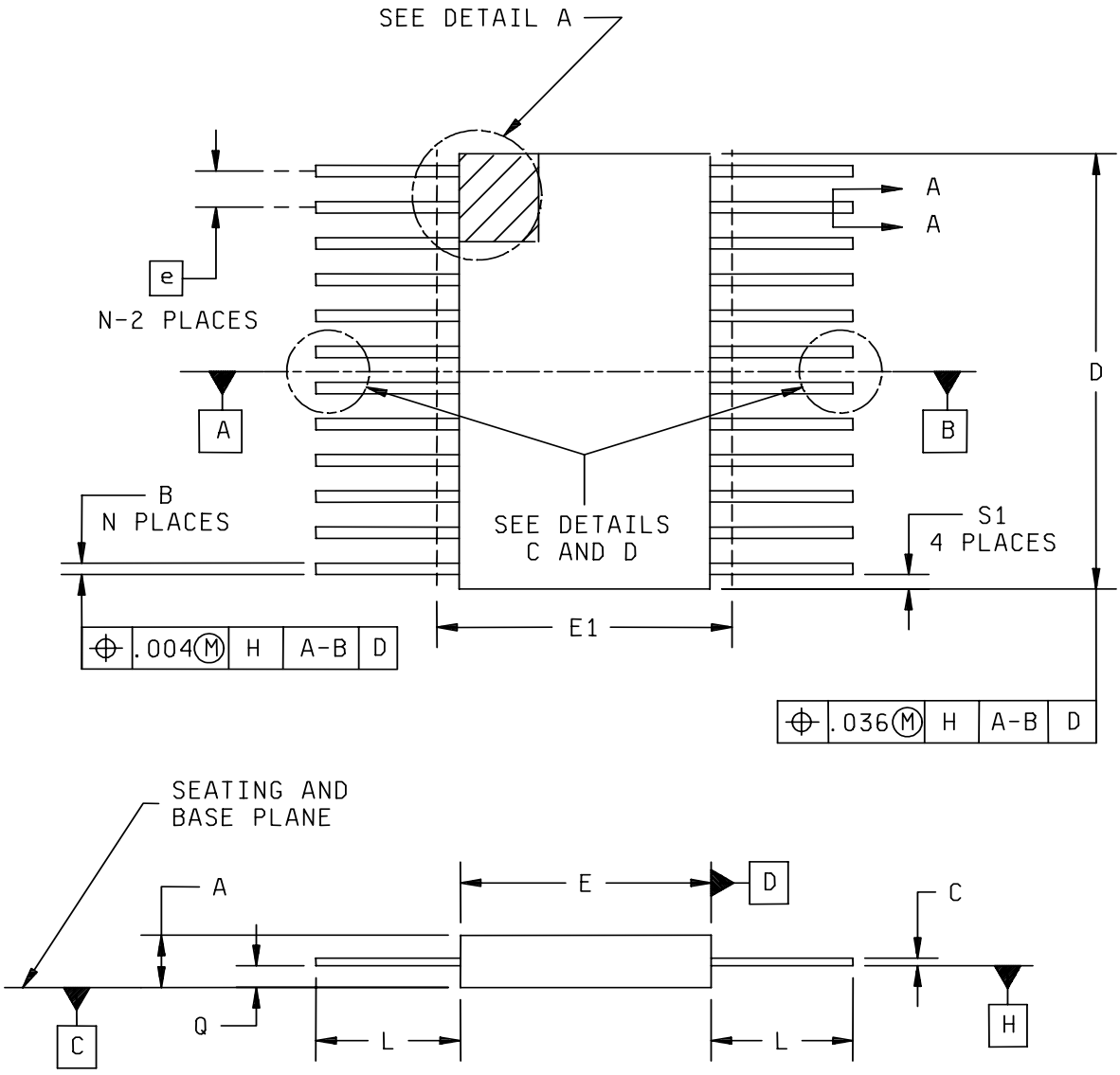

Configuration A
Ceramic, glass sealed

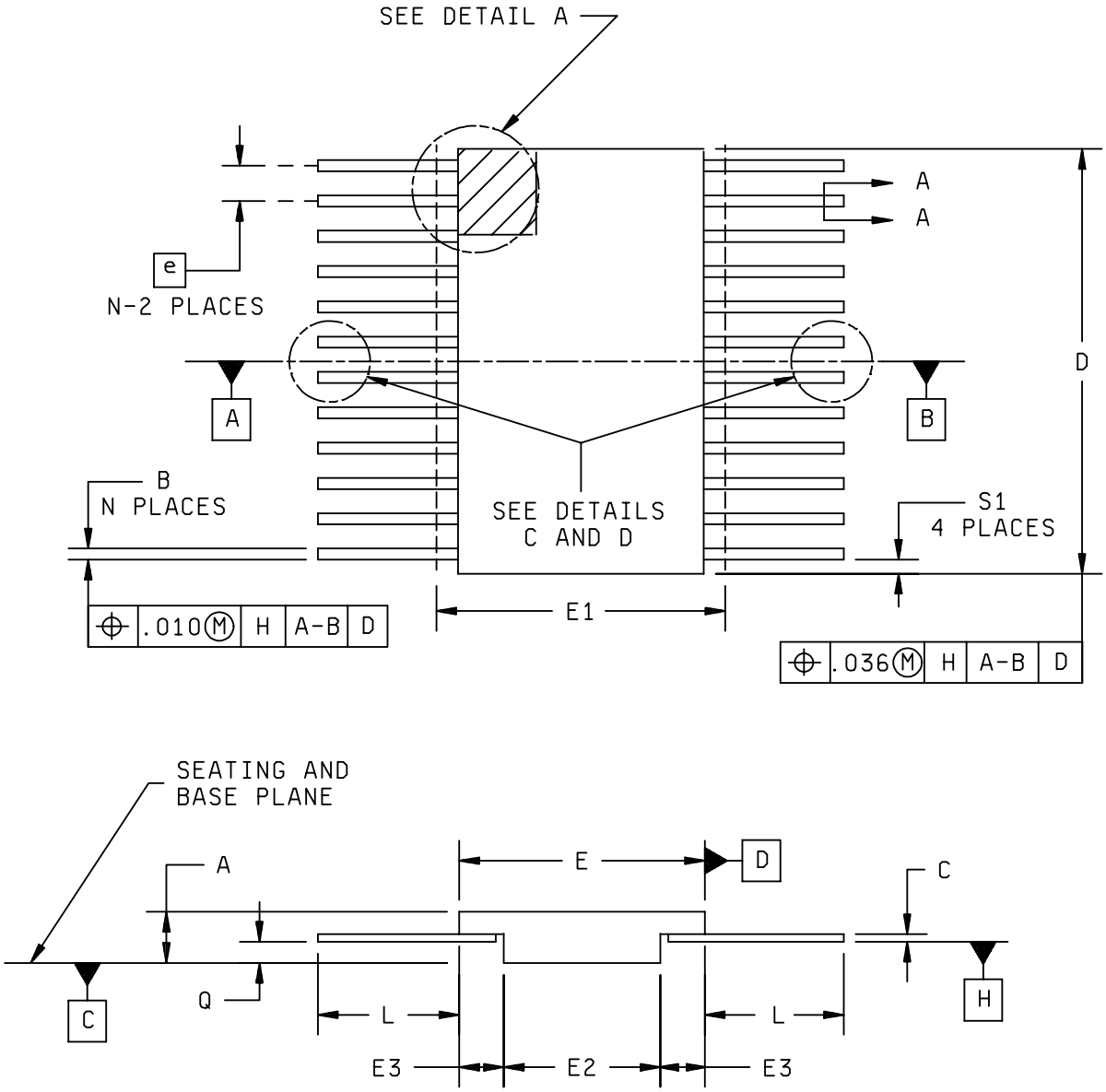

Configuration B
Ceramic, metal-sealed, bottom-brazed leads

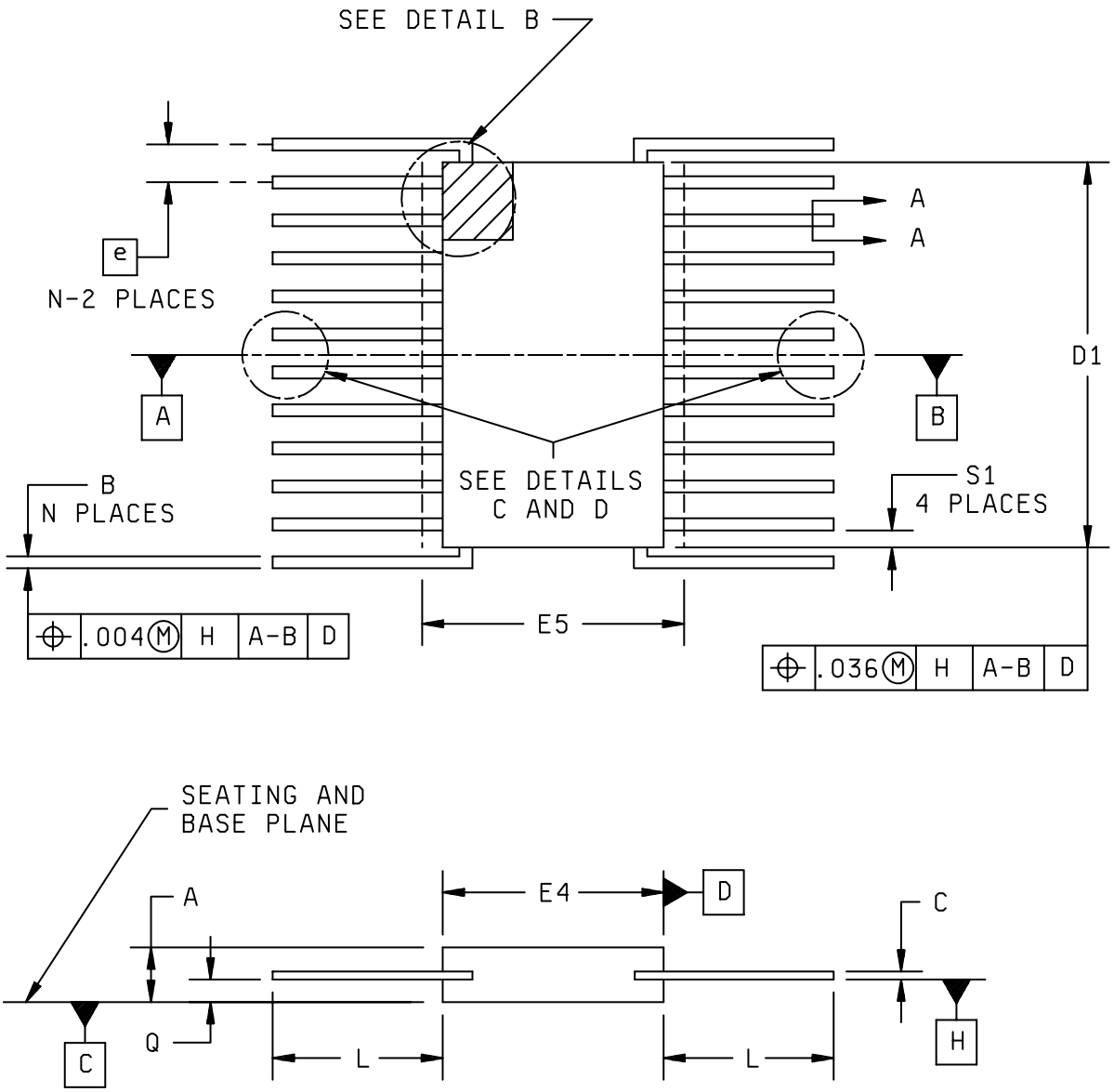

Configuration C
Ceramic, glass sealed, spider leads

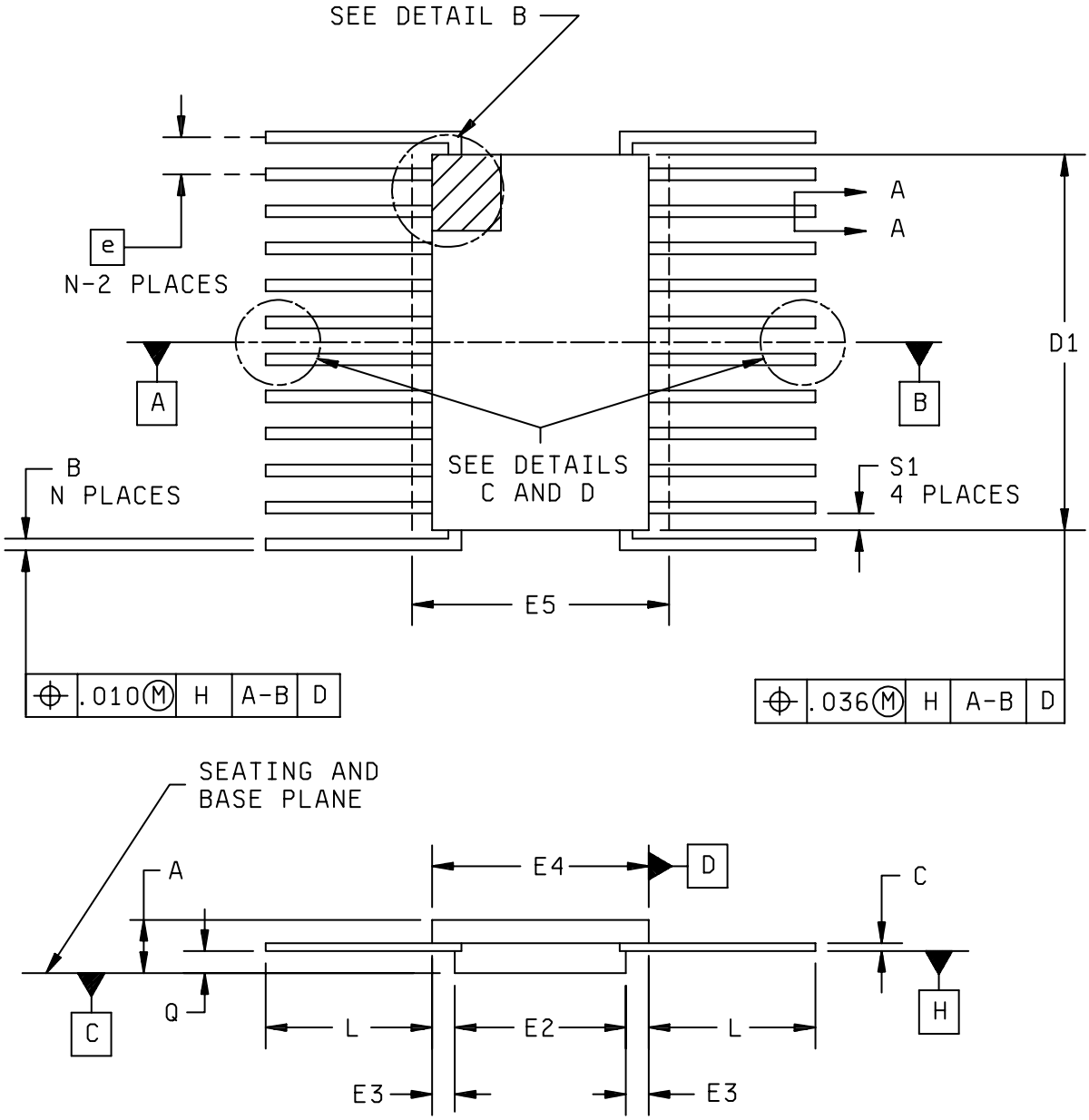

Configuration D
Ceramic, metal-sealed, bottom-brazed spider leads

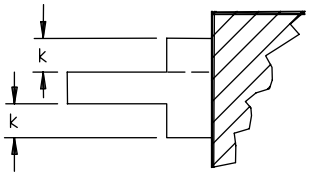

DETAIL A

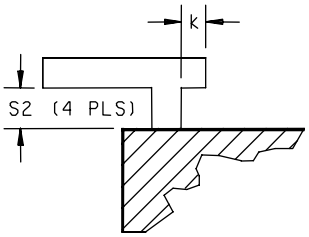

DETAIL B

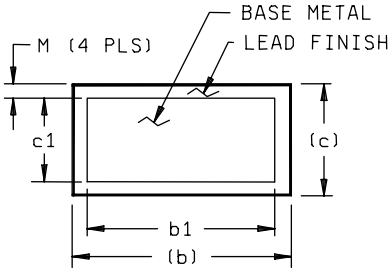

SECTION A-A

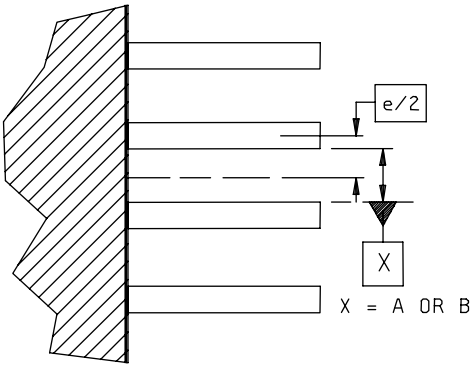

EVEN NUMBER OF LEADS PER SIDE
DETAIL C

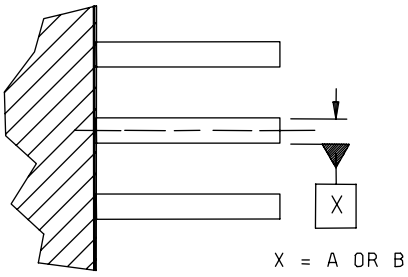

ODD NUMBER OF LEADS PER SIDE
DETAIL D

1/	Variations (all dimensions shown in inches)											
	F-1 Config. C, D			F-2 Config. A, B			F-2A Config. B			F-3 Config. C		
Symbol	Min	Max	Note	Min	Max	Note	Min	Max	Note	Min	Max	Note
A	.030	.085	15	.045	.085	15	.045	.115	15	.030	.070	15
b	.010	.022		.010	.022		.015	.022		.010	.022	
b1	.010	.019		.010	.019		.015	.019		.010	.019	
c	.004	.009		.004	.009		.004	.009		.004	.009	
c1	.004	.006		.004	.006		.004	.006		.004	.006	
D				---	.390	3	---	.390	3			
D1	---	.280	3							---	.280	3
E				.235	.260		.235	.260				
E1				---	.280	3	---	.290	3			
E2	.125	---		.125	---		.125	---				
E3	.030	---	7	.030	---	7	.030	---	7			
E4	.240	.260								.120	.200	
E5	---	.280	3							---	.220	3
e	.050 BSC			.050 BSC			.050 BSC			.050 BSC		
k	.008	.015	2	.008	.015	2	.008	.015	2	.008	.015	2
L	.250	.370		.250	.370		.270	.370		.165	.390	
Q	.026	.045	11	.026	.045	11	.026	.045	11	.026	.045	11
S1	.005	---	6	.005	---	6	.005	---	6	.005	---	6
S2	.004	---	9							.004	---	9
α	30°	90°	10							30°	90°	10
M	---	.0015		---	.0015		---	.0015		---	.0015	
N	14			14			14			14		
Note	1, 12, 13											

1/ Symbols in this column that are not on a configuration drawing are not applicable to that configuration.

1/	Variations (all dimensions shown in millimeters)											
	F-1 Config. C, D			F-2 Config. A, B			F-2A Config. B			F-3 Config. C		
Symbol	Min	Max	Note	Min	Max	Note	Min	Max	Note	Min	Max	Note
A	0.76	2.16	15	1.14	2.16	15	1.14	2.92	15	0.76	1.78	15
b	0.25	0.56		0.25	0.56		0.38	0.56		0.25	0.56	
b1	0.25	0.48		0.25	0.48		0.38	0.48		0.25	0.48	
c	0.10	0.23		0.10	0.23		0.10	0.23		0.10	0.23	
c1	0.10	0.15		0.10	0.15		0.10	0.15		0.10	0.15	
D				---	9.91	3	---	9.91	3			
D1	---	7.11	3							---	7.11	3
E				5.97	6.60		5.97	6.60				
E1				---	7.11	3	---	7.37	3			
E2	3.18	---		3.18	---		3.18	---				
E3	0.76	---	7	0.76	---	7	0.76	---	7			
E4	6.10	6.60								3.05	5.08	
E5	---	7.11	3							---	5.59	3
e	1.27 BSC			1.27 BSC			1.27 BSC			1.27 BSC		
k	0.20	0.38	2	0.20	0.38	2	0.20	0.38	2	0.20	0.38	2
L	6.35	9.40		6.35	9.40		6.86	9.40		4.19	9.91	
Q	0.66	1.14	11	0.66	1.14	11	0.66	1.14	11	0.66	1.14	11
S1	0.13	---	6	0.13	---	6	0.13	---	6	0.13	---	6
S2	0.10	---	9	---	---		---	---		0.10	---	9
α	30°	90°	10	---	---		---	---		30°	90°	10
M	---	0.04		---	0.04		---	0.04		---	0.04	
N	14			14			14			14		
Note	1, 12, 12											

1/ Symbols in this column that are not on a configuration drawing are not applicable to that configuration.

1/	Variations (all dimensions shown in inches)											
	F-4 Config. A, B			F-4A Config. B			F-5 Config. A, B			F-5A Config. B		
Symbol	Min	Max	Note	Min	Max	Note	Min	Max	Note	Min	Max	Note
A	.045	.090	15	.045	.115	15	.045	.085	15	.045	.115	15
b	.010	.022		.015	.022		.015	.022		.015	.022	
b1	.010	.019		.015	.019		.015	.019		.015	.019	
c	.004	.009		.004	.009		.004	.009		.004	.009	
c1	.004	.006		.004	.006		.004	.006		.004	.006	
D	---	.280	3	---	.290	3	---	.440	3	---	.440	3
D1												
E	.240	.260		.240	.260		.245	.285		.245	.285	
E1	---	.300	3	---	.280	3	---	.305	3	---	.315	3
E2	.125	---		.125	---		.130	---		.130	---	
E3	.030	---	7	.030	---	7	.030	---	7	.030	---	7
E4												
E5												
e	.050 BSC			.050 BSC			.050 BSC			.050 BSC		
k	.008	.015	2	.008	.015	2	.008	.015	2	.008	.015	2
L	.250	.370		.250	.370		.250	.370		.250	.370	
Q	.026	.045	11	.026	.045	11	.026	.045	11	.026	.045	11
S1	.005	---	6	.005	---	6	.005	---	6	.005	---	6
S2												
α												
M	---	.0015		---	.0015		---	.0015		---	.0015	
N	10			10			16			16		
Note	1, 12, 13											

1/ Symbols in this column that are not on a configuration drawing are not applicable to that configuration.

1/	Variations (all dimensions shown in millimeters)											
	F-4 Config. A, B			F-4A Config. B			F-5 Config. A, B			F-5A Config. B		
Symbol	Min	Max	Note	Min	Max	Note	Min	Max	Note	Min	Max	Note
A	1.14	2.29	15	1.14	2.92	15	1.14	2.16	15	1.14	2.92	15
b	0.25	0.56		0.38	0.56		0.38	0.56		0.38	0.56	
b1	0.25	0.48		0.38	0.48		0.38	0.48		0.38	0.48	
c	0.10	0.23		0.10	.0.23		0.10	0.23		0.10	0.23	
c1	0.10	0.15		0.10	0.15		0.10	0.15		0.10	0.15	
D	---	7.11	3	---	7.37	3	---	11.18	3	---	11.18	3
D1												
E	6.10	6.60		6.10	6.60		6.22	7.24		6.22	7.24	
E1	---	7.62	3	---	7.11	3	---	7.62	3	---	8.00	3
E2	3.18	---		3.18	---		3.30	---		3.30	---	
E3	0.76	---	7	0.76	---	7	0.76	---	7	0.76	---	7
E4												
E5												
e	1.27 BSC			1.27 BSC			1.27 BSC			1.27 BSC		
k	0.20	0.38	2	0.20	0.38	2	0.20	0.38	2	0.20	0.38	2
L	6.35	9.40		6.35	9.40		6.35	9.40		6.35	9.40	
Q	0.66	1.14	11	0.66	1.14	11	0.66	1.14	11	0.66	1.14	11
S1	0.13	---	6	0.13	---	6	0.13	---	6	0.13	---	6
S2												
α												
M	---	0.04		---	0.04		---	0.04		---	0.04	
N	10			10			16			16		
Note	1, 12, 13											

1/ Symbols in this column that are not on a configuration drawing are not applicable to that configuration.

1/	Variations (all dimensions shown in inches)											
	F-6 Config. ALL			F-6A Config. B			F-8 Config. C, D			F-9 Config. A, B, D		
Symbol	Min	Max	Note	Min	Max	Note	Min	Max	Note	Min	Max	Note
A	.045	.090	15	.045	.115	15	.045	.090	15	.045	.100	15
Ax										.068	.085	14
b	.015	.022		.015	.022		.015	.022		.015	.022	
b1	.015	.019		.015	.019		.015	.019		.015	.019	
c	.004	.009		.004	.009		.004	.009		.004	.009	
c1	.004	.006		.004	.006		.004	.006		.004	.006	
D	---	.640	3	---	.640	3				---	.540	3
D1	---	.530					---	.430	3	---	.410	3
E	.300	.420		.350	.420					.245	.300	
E1	---	.440	3	---	.450	3				---	.320	3
E2	.180	---		.180	---		.125	---		.130	---	
E3	.030	---	7	.030	---	7	.030	---	7	.030	---	7
E4	.340	.375					.245	.285		.245	.300	
E5	---	.395	3				---	.305	3	---	.320	3
e	.050 BSC			.050 BSC			.050 BSC			.050 BSC		
k	.008	.015	2	.008	.015	2	.008	.015	2	.008	.015	2
L	.250	.370		.250	.370		.250	.370		.250	.370	
Q	.026	.045	11	.026	.045	11	.026	.045	11	.026	.045	11
S1	.005	---	6	.000	---	6	.005	---	6	.005	---	6
S2	.004	---	9				.004	---	9	.004	---	9
α	30°	90°	10				30°	90°	10	30°	90°	10
M	---	.0015		---	.0015		---	.0015		---	.0015	
N	24			24			24			20		
Note	1, 12, 13											

1/ Symbols in this column that are not on a configuration drawing are not applicable to that configuration.

1/	Variations (all dimensions shown in millimeters)											
	F-6 Config. ALL			F-6A Config. B			F-8 Config. C, D			F-9 Config. A, B, D		
Symbol	Min	Max	Note	Min	Max	Note	Min	Max	Note	Min	Max	Note
A	1.14	2.29	15	1.14	2.92	15	1.14	2.29	15	1.14	2.92	15
Ax										1.73	2.16	14
b	0.38	0.56		0.38	0.56		0.38	0.56		0.38	0.56	
b1	0.38	0.48		0.38	0.48		0.38	0.48		0.38	0.48	
c	0.10	0.23		0.10	0.23		0.10	0.23		0.10	0.23	
c1	0.10	0.15		0.10	0.15		0.10	0.15		0.10	0.15	
D	---	16.26	3	---	16.26	3				---	13.72	3
D1	---	13.46	3				---	10.92	3	---	10.41	3
E	9.14	10.67		9.14	10.67					6.22	7.62	
E1	---	11.18	3	---	11.43	3				---	8.13	3
E2	4.57	---		4.57	---		3.18	---		3.30	---	
E3	0.76	---	7	0.76	---	7	0.76	---	7	0.76	---	
E4	8.64	9.53					6.22	7.24		6.22	7.62	
E5	---	10.03	3				---	7.75	3	---	8.13	3
e	1.27 BSC			1.27 BSC			1.27 BSC			1.27 BSC		
k	0.20	0.38	2	0.20	0.38	2	0.20	0.38	2	0.20	0.38	2
L	6.35	9.40		6.35	9.40		6.35	9.40		6.35	9.40	
Q	0.66	1.14	11	0.66	1.14	11	0.66	1.14	11	0.66	1.14	11
S1	0.13	---	6	0.00	---	6	0.13	---	6	0.13	---	6
S2	0.10	---	9				0.10	---		0.10	---	9
α	30°	90°	10				30°	90°	10	30°	90°	10
M	---	0.04		---	0.04		---	0.04		---	0.04	
N	24			24			24			20		
Note	1, 12, 13											

1/ Symbols in this column that are not on a configuration drawing are not applicable to that configuration.

1/	Variations (all dimensions shown in inches)											
	F-9A Config. B			F-10 Config. A			F-11 Config. A			F-11A Config. B		
Symbol	Min	Max	Note	Min	Max	Note	Min	Max	Note	Min	Max	Note
A	.045	.115	15	.045	.092	15	.045	.090	15	.045	.115	15
b	.015	.022		.015	.022		.015	.022		.015	.022	
b1	.015	.019		.015	.019		.015	.019		.015	.019	
c	.004	.009		.004	.009		.004	.009		.004	.009	
c1	.004	.006		.004	.006		.004	.006		.004	.006	
D	---	.540	3	---	.540	3	---	.740	3	---	.740	3
D1												
E	.245	.300		.245	.370		.340	.380		.460	.520	
E1	---	.330	3	---	.390	3	---	.400	3	---	.550	3
E2	.130	---		---	---		---	---		.180	---	
E3	.030	---	7							.030	---	7
E4												
E5												
e	.050 BSC			.050 BSC			.050 BSC			.050 BSC		
k	.008	.015	2	.005	.018	2	.005	.018	2	.008	.015	2
L	.250	.370		.250	.370		.250	.370		.250	.370	
Q	.026	.045	11	.026	.045	11	.026	.045	11	.026	.045	11
S1	.000	---	6	.005	---	6	.005	---	6	.000	---	6
S2												
α												
M	---	.0015		---	.0015		---	.0015		---	.0015	
N	20			18			28			28		
Note	1, 12, 13											

1/ Symbols in this column that are not on a configuration drawing are not applicable to that configuration.

1/	Variations (all dimensions shown in millimeters)											
	F-9A Config. B			F-10 Config. A			F-11 Config. A			F-11A Config. B		
Symbol	Min	Max	Note	Min	Max	Note	Min	Max	Note	Min	Max	Note
A	1.14	2.92	15	1.14	2.34	15	1.14	2.29	15	1.14	2.92	15
b	0.38	0.56		0.38	0.56		0.38	0.56		0.38	0.56	
b1	0.38	0.48		0.38	0.48		0.38	0.48		0.38	0.48	
c	0.10	0.23		0.10	0.23		0.10	0.23		0.10	0.23	
c1	0.10	0.15		0.10	0.15		0.10	0.15		0.10	0.15	
D	---	13.72	3	---	13.72	3	---	18.80	3	---	18.80	3
D1												
E	6.22	7.62		6.22	9.40		8.64	9.65		11.68	13.21	
E1	---	8.38	3	---	9.91	3	---	10.16	3	---	13.97	3
E2	3.30	---								4.57	---	
E3	0.76	---	7			7			7	0.76	---	7
E4												
E5												
e	1.27 BSC			1.27 BSC			1.27 BSC			1.27 BSC		
k	0.20	0.38	2	0.13	0.46	2	0.13	0.46	2	0.20	0.38	2
L	6.35	9.40		6.35	9.40		6.35	9.40		6.35	9.40	
Q	0.66	1.14	11	0.66	1.14	11	0.66	1.14	11	0.66	1.14	11
S1	0.00	---	6	0.13	---	6	0.13	---	6	0.00	---	6
α												
M	---	0.04		---	0.04		---	0.04		---	0.04	
N	20			18			28			28		
Note	1, 12, 13											

1/ Symbols in this column that are not on a configuration drawing are not applicable to that configuration.

1/	Variations (all dimensions shown in inches)											
	F-12 Config. B			F-13 Config. A			F-14 Config. A			F-15 Config. A		
Symbol	Min	Max	Note	Min	Max	Note	Min	Max	Note	Min	Max	Note
A	.090	.130	15	.060	.090	15	.060	.090	15	.060	.090	15
b	.015	.022		.015	.022		.015	.022		.015	.022	
b1	.015	.019		.015	.019		.015	.019		.015	.019	
c	.004	.009		.004	.009		.004	.009		.004	.009	
c1	.004	.006		.004	.006		.004	.006		.004	.006	
D	---	.740	3	---	.430	3	---	.480	3	---	.530	3
D1												
E	.380	.420		.305	.355		.305	.355		.305	.355	
E1	---	.440	3	---	.375	3	---	.375	3	---	.375	3
E2	.180	---										
E3	.030	---	7									
E4												
E5												
e	.050 BSC			.050 BSC			.050 BSC			.050 BSC		
k	.008	.015	2	.005	.018	2	.005	.018	2	.005	.018	2
L	.250	.370		.250	.370		.250	.370		.250	.370	
Q	.026	.045	11	.026	.045	11	.026	.045	11	.026	.045	11
S1	.000	---	6	.005	---	6	.005	---	6	.005	---	6
S2												
α												
M	---	.0015		---	.0015		---	.0015		---	.0015	
N	28			16			18			20		
Note	1, 12, 13											

1/ Symbols in this column that are not on a configuration drawing are not applicable to that configuration.

1/	Variations (all dimensions shown in millimeters)											
	F-12 Config. B			F-13 Config. A			F-14 Config. A			F-15 Config. A		
Symbol	Min	Max	Note	Min	Max	Note	Min	Max	Note	Min	Max	Note
A	2.29	3.30	15	1.52	2.29	15	1.52	2.29	15	1.52	2.29	15
b	0.38	0.56		0.38	0.56		0.38	0.56		0.38	0.56	
b1	0.38	0.48		0.38	0.48		0.38	0.48		0.38	0.48	
c	0.10	0.23		0.10	0.23		0.10	0.23		0.10	0.23	
c1	0.10	0.15		0.10	0.15		0.10	0.15		0.10	0.15	
D	---	18.80	3	---	10.92	3	---	12.19	3	---	13.46	3
D1												
E	9.65	10.67		7.75	9.02		7.75	9.02		7.75	9.02	
E1	---	11.18	3	---	9.53	3	---	9.53	3	---	9.53	3
E2	4.57	---										
E3	0.76	---	7									
E4												
E5												
e	1.27 BSC			1.27 BSC			1.27 BSC			1.27 BSC		
k	0.20	0.38	2	0.13	0.46	2	0.13	0.46	2	0.13	0.46	2
L	6.35	9.40		6.35	9.40		6.35	9.40		6.35	9.40	
Q	0.66	1.14	11	0.66	1.14	11	0.66	1.14	11	0.66	1.14	11
S1	0.00	---	6	0.13	---	6	0.13	---	6	0.13	---	6
S2												
α												
M	---	0.04		---	0.04		---	0.04		---	0.04	
N	28			16			18			20		
NOTE	1, 12, 13											

1/ Symbols in this column that are not on a configuration drawing are not applicable to that configuration.

1/	Variations (all dimensions shown in inches)									
	F-16 Config. A			F-17 Config. A			F-18 Config. B			
Symbol	Min	Max	Note	Min	Max	Note	Min	Nom	Max	Note
A	.060	.090	15	.060	.090	15	.090	.107	.120	15
b	.015	.022		.015	.022		.015	---	.020	
b1	.015	.019		.015	.019		.015	.017	.019	
c	.004	.009		.004	.009		.004	---	.007	
c1	.004	.006		.004	.006		.004	.005	.006	
D	---	.630	3	---	.730	3	---	---	.830	3
D1										
E	.330	.380		.330	.380		.472	.480	.488	
E1	---	.400	3	---	.400	3	---	---	.498	3
E2							.350	---	---	
E3							.030	---	---	7
E4										
E5										
e	.050 BSC			.050 BSC			.050 BSC			
k	.005	.018	2	.005	.018	2	.008	.012	.015	2
L	.250	.370		.250	.370		.270	.320	.370	
Q	.026	.045	11	.026	.045	11	.026	.035	.045	11
S1	.005	---	6	.005	---	6	.005	---	---	6
S2										
α										
M	---	.0015		---	.0015		---	---	.0015	
N	24			28			32			
Note	1, 12, 13									

1/ Symbols in this column that are not on a configuration drawing are not applicable to that configuration.

1/	Variations (all dimensions shown in millimeters)									
	F-16 Config. A			F-17 Config. A			F-18 Config. B			
Symbol	Min	Max	Note	Min	Max	Note	Min	Nom	Max	Note
A	1.52	2.29	15	1.52	2.29	15	2.29	2.72	3.05	15
b	0.38	0.51		0.38	0.51		0.38	---	0.51	
b1	0.38	0.48		0.38	0.48		0.38	0.43	0.48	
c	0.10	0.23		0.10	0.23		0.10	---	0.18	
c1	0.10	0.15		0.10	0.15		0.10	0.13	0.15	
D	---	16.00	3	---	18.54	3	---	---	21.08	3
D1										
E	8.38	9.65		8.38	9.65		11.92	12.19	12.40	
E1	---	10.16	3	---	10.16	3	---	---	12.65	3
E2							8.89	---	---	
E3							0.76	---	---	7
E4										
E5										
e	1.27 BSC			1.27 BSC			1.27 BSC			
k	0.13	0.46	2	0.13	0.46	2	0.20	0.30	0.38	2
L	6.35	9.40		6.35	9.40		6.86	8.13	9.40	
Q	0.66	1.14	11	0.66	1.14	11	0.66	0.89	1.14	11
S1	0.13	---	6	0.13	---	6	0.13	---	---	6
S2										
α										
M	---	0.04		---	0.04		---	---	0.01	
N	24			28			32			
Note	1, 12, 13									

1/ Symbols in this column that are not on a configuration drawing are not applicable to that configuration.

1/	Variations (all dimensions shown in inches)							
	F-19 Config. A				F-20 Config. A			
Symbol	Min	Nom	Max	Note	Min	Nom	Max	Note
A	.075	.098	.120	15	.075	.098	.120	15
b	.008	.010	.014		.008	.010	.014	
b1	.008	.010	.012		.008	.010	.012	
c	.004	.006	.009		.004	.006	.009	
c1	.004	.005	.006		.004	.005	.006	
D	---	---	.640	3	---	---	.740	3
D1								
E	.370	.380	.390		.370	.380	.390	
E1	---	---	.410	3	---	---	.410	3
E2								
E3								
E4								
E5								
e	.025 BSC				.025 BSC			
k	.003	.005	.007	2	.003	.005	.007	2
L	.250	.310	.370		.250	.310	.370	
Q	.026	.035	.045	11	.026	.035	.045	11
S1	.005	---	---	6	.005	---	---	
S2								
α								
M	---	---	.0015		---	---	.0015	
N	48				56			
Note	1, 12, 13							

1/ Symbols in this column that are not on a configuration drawing are not applicable to that configuration.

1/	Variations (all dimensions shown in millimeters)							
	F-19 Config. A				F-20 Config. A			
Symbol	Min	Nom	Max	Note	Min	Nom	Max	Note
A	1.91	2.49	3.01	15	1.91	2.49	3.01	15
b	0.20	0.25	0.36		0.20	0.25	0.36	
b1	0.20	0.25	0.30		0.20	0.25	0.30	
c	0.10	0.15	0.23		0.10	0.15	0.23	
c1	0.10	0.13	0.15		0.10	0.13	0.15	
D	---	---	16.26	3	---	---	18.80	3
D1								
E	9.40	9.65	9.91		9.40	9.65	9.91	
E1	---	---	10.41	3	---	---	10.41	3
E2								
E3								
E4								
E5								
e	0.64 BSC				0.64 BSC			
k	0.08	0.13	0.18	2	0.08	0.13	0.18	2
L	6.35	7.87	9.40		6.35	7.87	9.40	
Q	0.66	0.89	1.14	11	0.66	0.89	1.14	11
S1	0.25	---	---	6	0.25	---	---	6
S2								
α								
M	---	---	0.04		---	---	0.04	
N	48				56			
Note	1, 12, 13							

1/ Symbols in this column that are not on a configuration drawing are not applicable to that configuration.

NOTES:

1. Index area: A notch or a pin one identification mark shall be located adjacent to pin one and shall be located within the shaded area shown. The manufacturer's identification shall not be used as a pin one identification mark. Alternatively, a tab (dimension k) may be used to identify pin one. This tab may be located on either side of terminal one as shown in detail A, or it may be located on terminal one as shown in detail B.
2. If a pin one identification mark is used in addition to a tab, the limits of dimension k do not apply.
3. This dimension allows for off-center lid, meniscus, and glass overrun.
4. Dimensions b1 and c1 apply to lead base metal only. Dimension M applies to lead plating and finish thickness. The maximum limits of lead dimensions b and c or M shall be measured at the centroid of the finished lead surfaces, when solder dip or tin plate lead finish is applied.
5. N is the maximum number of terminal positions.
6. Measure dimension S1 at all four corners, see 5.2.5. There is an alternative minimum limit to dimension S1, see 5.2.2.
7. For bottom-brazed lead packages, no organic or polymeric materials shall be molded to the bottom of the package to cover the leads.
8. Optional, see note 1. If a pin one identification mark is used in addition to this tab, the minimum limit of dimension k does not apply.
9. Applies to leads exiting the end of the body (short side) and closest to the corners.
10. Lead configuration is optional within dimension E except dimensions b and c apply (see 5.2.1).
11. Dimension Q shall be measured at the point of exit (beyond the meniscus) of the lead from the body. Dimension Q minimum shall be reduced by .0015 inch (0.038 mm) maximum when solder dip lead finish is applied.
12. See tables VI and VII for descriptive type designators.
13. Configurations C and D are inactive for applications in new equipment design, see 4.8.
14. Ax is used instead of A for configuration D only.
15. Dimension "A" controls the overall package thickness. When a window lid is used, dimension "A" must increase by a minimum of .010 inch (0.254 mm) and a maximum of .040 inch (1.020 mm).

REQUIREMENT 102

DUAL-IN-LINE PACKAGE STYLE

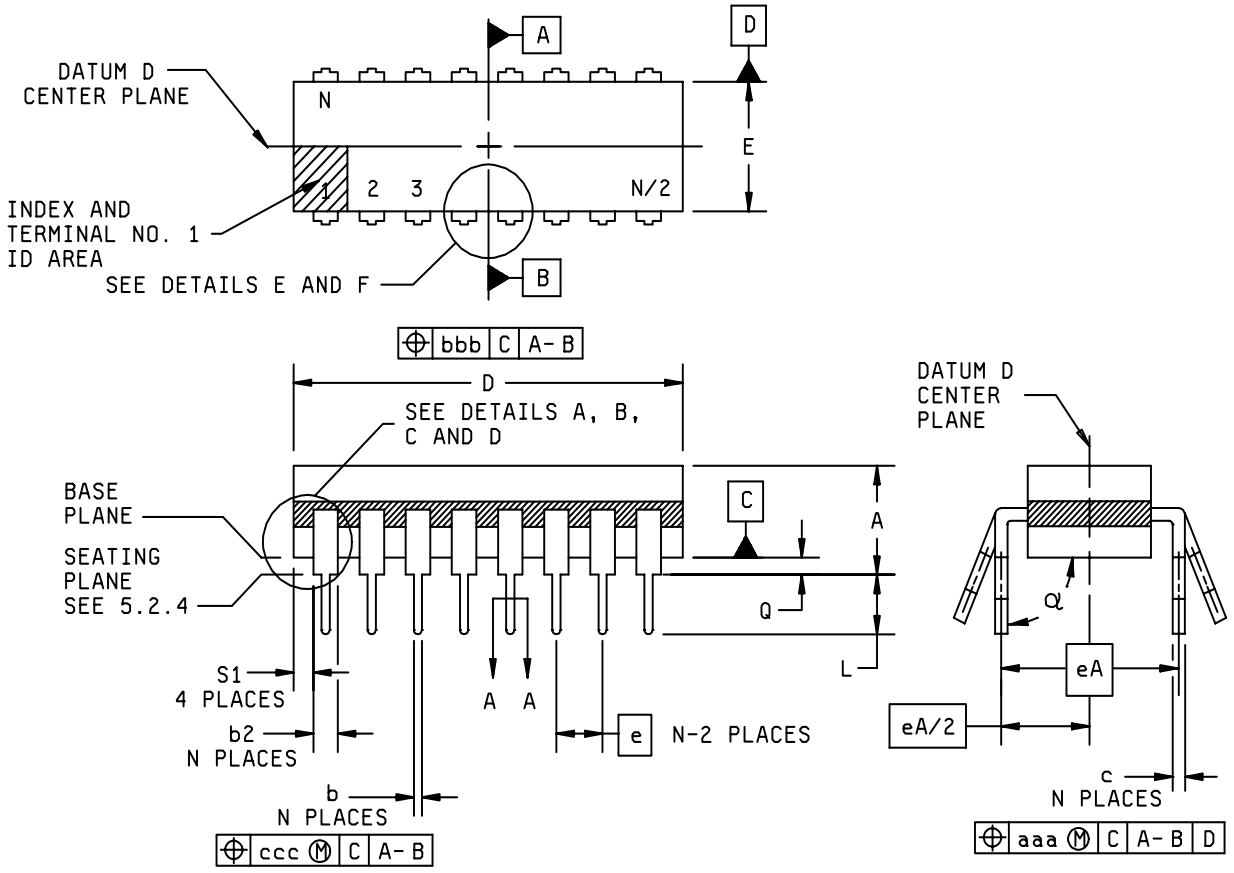

Configuration A
Ceramic, glass-sealed

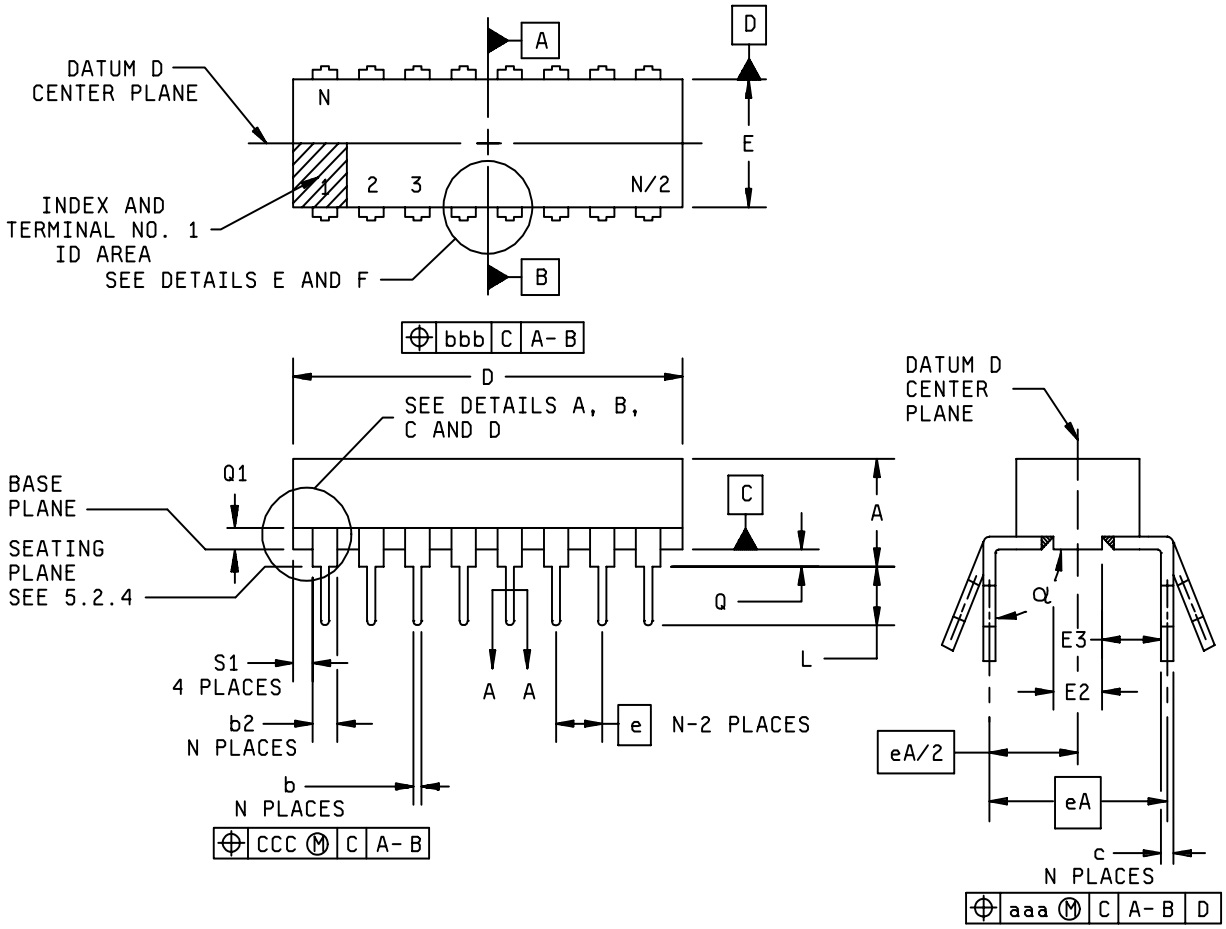

Configuration B
Ceramic, metal-sealed, bottom-brazed leads

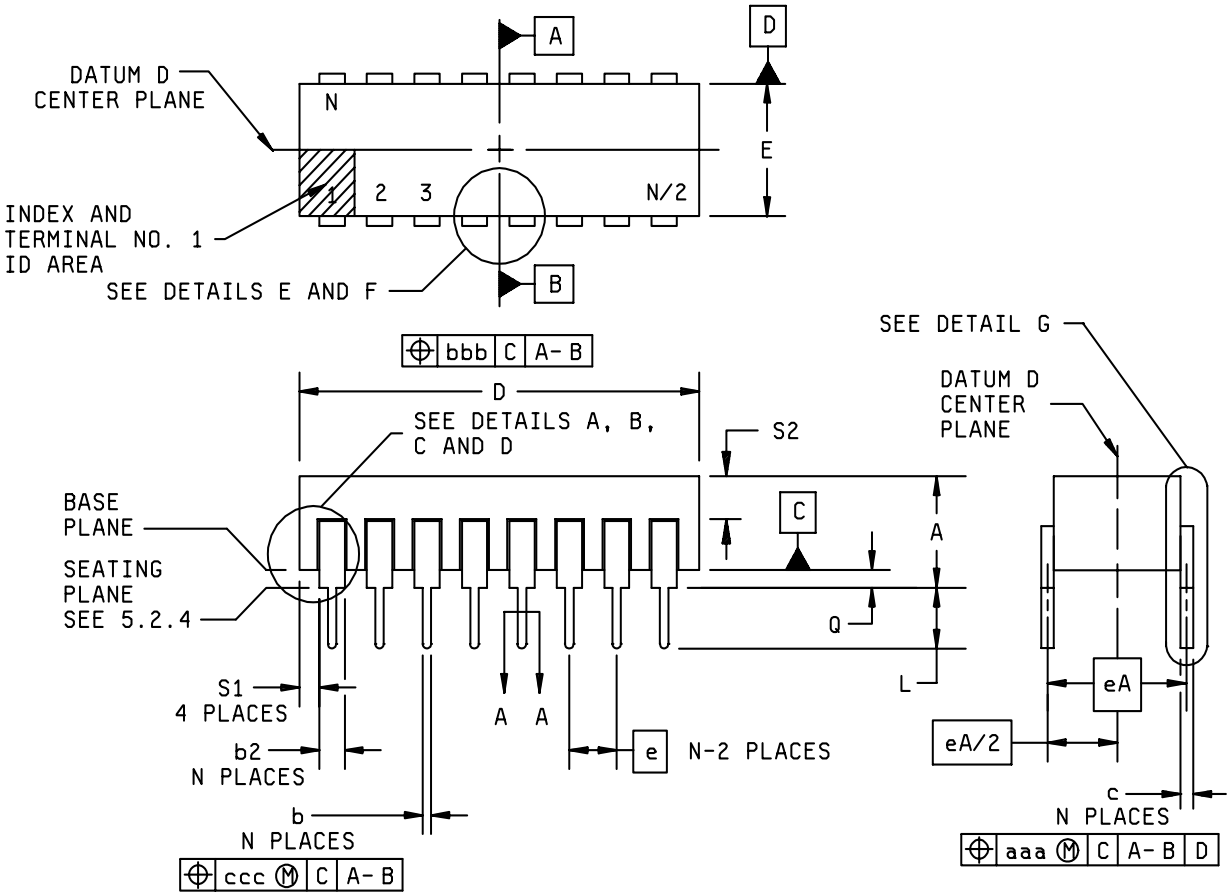

Configuration C
Ceramic, metal-sealed, side-brazed leads

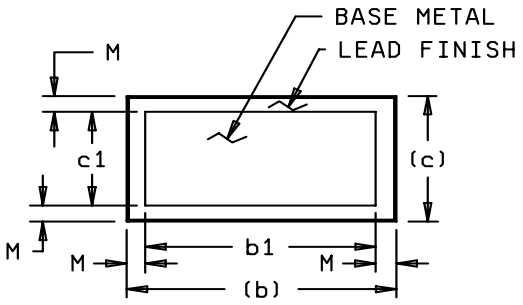

SECTION A-A

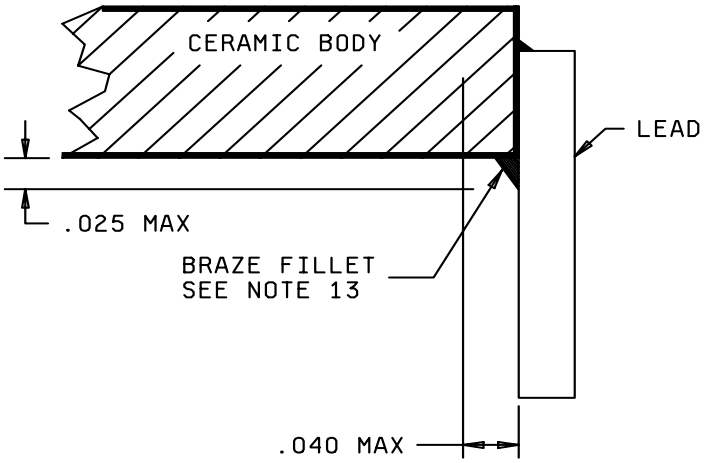

DETAIL G

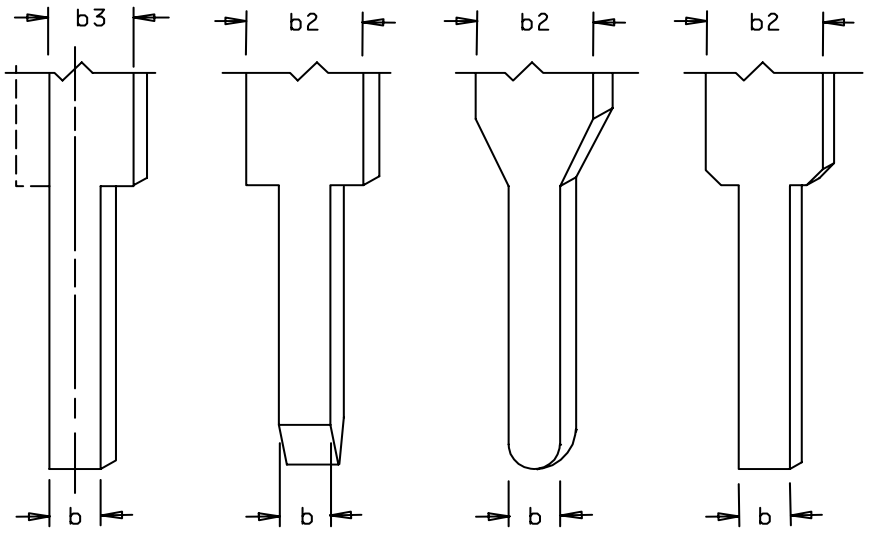

DETAIL A (HALF LEAD)

DETAIL B (ACCEPTABLE ALTERNATIVE LEAD WIDTH TRANSITION b TO b2 OR b3)

DETAIL C

DETAIL D

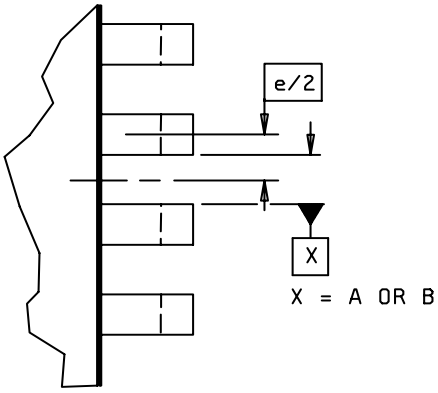

DETAIL E

(EVEN NUMBER OF LEADS PER SIDE)

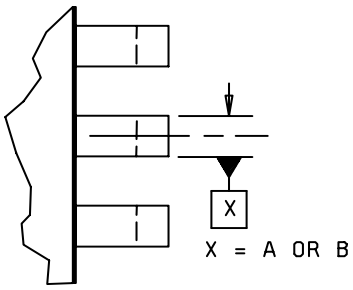

DETAIL F

(ODD NUMBER OF LEADS PER SIDE)

1/	Variations (all dimensions shown in inches) 2/											
	D-1			D-2			D-3			D-4		
Symbol	Min	Max	Note	Min	Max	Note	Min	Max	Note	Min	Max	Note
A	---	.200		---	.200		---	.225		---	.200	
b	.014	.026	2	.014	.026	2	.014	.026	2	.014	.026	2
b1	.014	.023	3	.014	.023	3	.014	.023	3	.014	.023	3
b2	.045	.065	4	.045	.065	4	.045	.065	4	.045	.065	4
b3	.023	.045	5	.023	.045	5	.023	.045	5	.023	.045	5
c	.008	.018	2	.008	.018	2	.008	.018	2	.008	.018	2
c1	.008	.015	3	.008	.015	3	.008	.015	3	.008	.015	3
D	---	.785	6	---	.840	6	---	1.290	6	---	.405	6
E	.220	.310	6	.220	.310	6	.500	.610	6	.220	.310	6
E2	.100	---		.100	---		.270	---		.100	---	
E3	.050	---	7	.050	---	7	.050	---	7	.050	---	7
e	.100 BSC			.100 BSC			.100 BSC			.100 BSC		
eA	.300 BSC			.300 BSC			.600 BSC			.300 BSC		
eA/2	.150 BSC			.150 BSC			.300 BSC			.150 BSC		
L	.125	.200	8	.125	.200	8	.120	.200	8	.125	.200	8
Q	.015	.060	9	.015	.060	9	.015	.075	9	.015	.060	9
Q1	.020	---		.020	---		.020	---		.020	---	
S1	.005	---	10	.005	--	10	.005	---	10	.005	---	10
S2	.005	---	11	.005	---	11	.005	---	11	.005	---	11
α	90°	105°		90°	105°		90°	105°		90°	105°	
aaa	---	.015		---	.015		---	.015		---	.015	
bbb	---	.030		---	.030		---	.030		---	.030	
ccc	---	.010		---	.010		---	.010		---	.010	
M	---	.0015	2	---	.0015	2	---	.0015	2	---	.0015	2
N	14		12	16		12	24		12	8		12
Note	1, 14											

1/ Symbols in this column that are not on a configuration drawing are not applicable to that configuration.
2/ All configurations except as noted.

1/	Variations (all dimensions shown in millimeters) 2/											
	D-1			D-2			D-3			D-4		
Symbol	Min	Max	Note	Min	Max	Note	Min	Max	Note	Min	Max	Note
A	---	5.08		---	5.08		---	5.72		---	5.08	
b	0.36	0.66	2	0.36	0.66	2	0.36	0.66	2	0.36	0.66	2
b1	0.36	0.58	3	0.36	0.58	3	0.36	0.58	3	0.36	0.58	3
b2	1.14	1.65	4	1.14	1.65	4	1.14	1.65	4	1.14	1.65	4
b3	0.58	1.14	5	0.58	1.14	5	0.58	1.14	5	0.58	1.14	5
c	0.20	0.46	2	0.20	0.46	2	0.20	0.46	2	0.20	0.46	2
c1	0.20	0.38	3	0.20	0.38	3	0.20	0.38	3	0.20	0.38	3
D	---	19.94	6	---	21.34	6	---	32.77	6	---	10.29	6
E	5.59	7.87	6	5.59	7.87	6	12.70	15.49	6	5.59	7.87	6
E2	2.54	---		2.54	---		6.86	---		2.54	---	
E3	1.27	---	7	1.27	---	7	1.27	---	7	1.27	---	7
e	2.54 BSC			2.54 BSC			2.54 BSC			2.54 BSC		
eA	7.62 BSC			7.62 BSC			15.24 BSC			7.62 BSC		
eA/2	3.81 BSC			3.81 BSC			7.62 BSC			3.81 BSC		
L	3.18	5.08	8	3.18	5.08	8	3.05	5.08	8	3.18	5.08	8
Q	0.38	1.52	9	0.38	1.52	9	0.38	1.91	9	0.38	1.52	9
Q1	0.51	---		0.51	---		0.51	---		0.51	---	
S1	0.13	---	10	0.13	---	10	0.13	---	10	0.13	---	10
S2	0.13	---	11	0.13	---	11	0.13	---	11	0.13	---	11
α	90°	105°		90°	105°		90°	105°		90°	105°	
aaa	---	0.38		---	0.38		---	0.38		---	0.38	
bbb	---	0.76		---	0.76		---	0.76		---	0.76	
ccc	---	0.25		---	0.25		---	0.25		---	0.25	
M	---	0.038	2	---	0.038	2	---	0.038	2	---	0.038	2
N	14		12	16		12	24		12	8		12
Note	1, 14											

1/ Symbols in this column that are not on a configuration drawing are not applicable to that configuration.
2/ All configurations except as noted.

1/	Variations (all dimensions shown in inches) 2/											
	D-5			D-6			D-7			D-8		
Symbol	Min	Max	Note	Min	Max	Note	Min	Max	Note	Min	Max	Note
A	---	.225		---	.200		---	.225		---	.200	
b	.014	.026	2	.014	.026	2	.014	.026	2	.014	.026	2
b1	.014	.023	3	.014	.023	3	.014	.023	3	.014	.023	3
b2	.045	.065	4	.045	.065	4	.045	.065	4	.045	.065	4
b3	.023	.045	5	.023	.045	5	.023	.045	5	.023	.045	5
c	.008	.018	2	.008	.018	2	.008	.018	2	.008	.018	2
c1	.008	.015	3	.008	.015	3	.008	.015	3	.008	.015	3
D	---	2.096	6	---	.960	6	---	1.111	6	---	1.060	6
E	.510	.620	6	.220	.310	6	.350	.410	6	.220	.310	6
E2	.280	---		.100	---		.270	---		.100	---	
E3	.050	---	7	.050	---	7	.050	---	7	.050	---	7
e	.100 BSC			.100 BSC			.100 BSC			.100 BSC		
eA	.600 BSC			.300 BSC			.400 BSC			.300 BSC		
eA/2	.300 BSC			.150 BSC			.200 BSC			.150 BSC		
L	.125	.200	8	.125	.200	8	.125	.200	8	.125	.200	8
Q	.015	.070	9	.015	.070	9	.015	.070	9	.015	.070	9
Q1	.020	---		.020	---		.020	---		.020	---	
S1	.005	---	10	.005	---	10	.005	---	10	.005	---	10
S2	.005	---	11	.005	---	11	.005	---	11	.005	---	11
α	90°	105°		90°	105°		90°	105°		90°	105°	
aaa	---	.015		---	.015		---	.015		---	.015	
bbb	---	.030		---	.030		---	.030		---	.030	
ccc	---	.010		---	.010		---	.010		---	.010	
M	---	.0015	2	---	.0015	2	---	.0015	2	---	.0015	2
N	40		12	18		12	22		12	20		12
Note	1, 14											

1/ Symbols in this column that are not on a configuration drawing are not applicable to that configuration.
2/ All configurations except as noted.

1/	Variations (all dimensions shown in millimeters) 2/											
	D-5			D-6			D-7			D-8		
Symbol	Min	Max	Note	Min	Max	Note	Min	Max	Note	Min	Max	Note
A	---	5.72		---	5.08		---	5.72		---	5.08	
b	0.36	0.66	2	0.36	0.66	2	0.36	0.66	2	0.36	0.66	2
b1	0.36	0.58	3	0.36	0.58	3	0.36	0.58	3	0.36	0.58	3
b2	1.14	1.65	4	1.14	1.65	4	1.14	1.65	4	1.14	1.65	4
b3	0.58	1.14	5	0.58	1.14	5	0.58	1.14	5	0.58	1.14	5
c	0.20	0.46	2	0.20	0.46	2	0.20	0.46	2	0.20	0.46	2
c1	0.20	0.38	3	0.20	0.38	3	0.20	0.38	3	0.20	0.38	3
D	---	53.24	6	---	24.38	6	---	28.22	6	---	26.92	6
E	12.95	15.75	6	5.59	7.87	6	8.89	10.41	6	5.59	7.87	6
E2	7.11	---		2.54	---		6.86	---		2.54	---	
E3	1.27	---	7	1.27	---	7	1.27	---	7	1.27	---	7
e	2.54 BSC			2.54 BSC			2.54 BSC			2.54 BSC		
eA	7.62 BSC			7.62 BSC			15.24 BSC			7.62 BSC		
eA/2	3.81 BSC			3.81 BSC			7.62 BSC			3.81 BSC		
L	3.18	5.08	8	3.18	5.08	8	3.18	5.08	8	3.18	5.08	8
Q	0.38	1.78	9	0.38	1.78	9	0.38	1.78	9	0.38	1.78	9
Q1	0.51	---		0.51	---		0.51	---		0.51	---	
S1	0.13	---	10	0.13	---	10	0.13	---	10	0.13	---	10
S2	0.13	---	11	0.13	---	11	0.13	---	11	0.13	---	11
α	90°	105°		90°	105°		90°	105°		90°	105°	
aaa	---	0.38		---	0.38		---	0.38		---	0.38	
bbb	---	0.76		---	0.76		---	0.76		---	0.76	
ccc	---	0.25		---	0.25		---	0.25		---	0.25	
M	---	0.038	2	---	0.038	2	---	0.038	2	---	0.038	2
N	40		12	18		12	22		12	20		12
Note	1, 14											

1/ Symbols in this column that are not on a configuration drawing are not applicable to that configuration.
2/ All configurations except as noted.

1/	Variations (all dimensions shown in inches) 2/											
	D-9			D-10			D-11 Config. A, C			D-12 Config. A, C		
Symbol	Min	Max	Note	Min	Max	Note	Min	Max	Note	Min	Max	Note
A	---	.200		---	.232		---	.225		---	.225	
b	.014	.026	2	.014	.026	2	.014	.026	2	.014	.026	2
b1	.014	.023	3	.014	.023	3	.014	.023	3	.014	.023	3
b2	.045	.065	4	.045	.065	4	.045	.065	4	.045	.065	4
b3	.023	.045	5	.023	.045	5	.023	.045	5	.023	.045	5
c	.008	.018	2	.008	.018	2	.008	.018	2	.008	.018	2
c1	.008	.015	3	.008	.015	3	.008	.015	3	.008	.015	3
D	---	1.280	6	---	1.490	6	---	1.250	6	---	2.540	6
E	.220	.310	6	.500	.610	6	.350	.410	6	.870	.920	6
E2	.100	---		.270	---							
E3	.050	---	7	.050	---	7						
e	.100 BSC			.100 BSC			.100 BSC			.100 BSC		
eA	.300 BSC			.600 BSC			.400 BSC			.900 BSC		
eA/2	.150 BSC			.300 BSC			.200 BSC			.450 BSC		
L	.125	.200	8	.125	.200	8	.125	.200	8	.125	.200	8
Q	.015	.060	9	.015	.060	9	.015	.060	9	.015	.070	9
Q1	.020	---		.020	---							
S1	.005	---	10	.005	---	10	.005	---	10	.005	---	10
S2	.005	---	11	.005	---	11	.005	---	11	.005	---	11
α	90°	105°		90°	105°		90°	105°		90°	105°	
aaa	---	.015		---	.015		---	.015		---	.015	
bbb	---	.030		---	.030		---	.030		---	.030	
ccc	---	.010		---	.010		---	.010		---	.010	
M	---	.0015	2	---	.0015	2	---	.0015	2	---	.0015	2
N	24		12	28		12	24		12	50		12
Note	1, 14											

1/ Symbols in this column that are not on a configuration drawing are not applicable to that configuration.
2/ All configurations except as noted.

1/	Variations (all dimensions shown in millimeters) 2/											
	D-9			D-10			D-11 Config. A, C			D-12 Config. A, C		
Symbol	Min	Max	Note	Min	Max	Note	Min	Max	Note	Min	Max	Note
A	---	5.08		---	5.92		---	5.72		---	5.72	
b	0.36	0.66	2	0.36	0.66	2	0.36	0.66	2	0.36	0.66	2
b1	0.36	0.58	3	0.36	0.58	3	0.36	0.58	3	0.36	0.58	3
b2	1.14	1.65	4	1.14	1.65	4	1.14	1.65	4	1.14	1.65	4
b3	0.58	1.14	5	0.58	1.14	5	0.58	1.14	5	0.58	1.14	5
c	0.20	0.46	2	0.20	0.46	2	0.20	0.46	2	0.20	0.46	2
c1	0.20	0.38	3	0.20	0.38	3	0.20	0.38	3	0.20	0.38	3
D	---	32.51	6	---	37.85	6	---	31.75	6	---	64.52	6
E	5.59	7.87	6	12.70	15.49	6	8.89	10.41	6	22.10	23.37	6
E2	2.54	---		6.86	---							
E3	1.27	---	7	1.27	---	7						
e	2.54 BSC			2.54 BSC			2.54 BSC			2.54 BSC		
eA	7.62 BSC			15.24 BSC			10.16 BSC			22.86 BSC		
eA/2	3.81 BSC			7.62 BSC			5.08 BSC			11.83 BSC		
L	3.18	5.08	8	3.18	5.08	8	3.18	5.08	8	3.18	5.08	8
Q	0.38	1.52	9	0.38	1.52	9	0.38	1.52	9	0.38	1.78	9
Q1	0.51	---		0.51	---							
S1	0.13	---	10	0.13	---	10	0.13	---	10	0.13	---	10
S2	0.13	---	11	0.13	---	11	0.13	---	11	0.13	---	11
α	90°	105°		90°	105°		90°	105°		90°	105°	
aaa	---	0.38		---	0.38		---	0.38		---	0.38	
bbb	---	0.76		---	0.76		---	0.76		---	0.76	
ccc	---	0.25		---	0.25		---	0.25		---	0.25	
M	---	0.038	2	---	0.038	2	---	0.038	2	---	0.038	2
N	24		12	28		12	24		12	50		12
Note	1, 14											

1/ Symbols in this column that are not on a configuration drawing are not applicable to that configuration.
2/ All configurations except as noted.

1/	Variations (all dimensions shown in inches) 2/											
	D-13 Config. C			D-14 Config. A, C			D-15 Config. A, C			D-16 Config. A, C		
Symbol	Min	Max	Note	Min	Max	Note	Min	Max	Note	Min	Max	Note
A	---	.225		---	.225		---	.225		---	.225	
b	.014	.026	2	.014	.026	2	.014	.026	2	.014	.026	2
b1	.014	.023	3	.014	.023	3	.014	.023	3	.014	.023	3
b2	.045	.065	4	.045	.065	4	.045	.065	4	.045	.065	4
b3	.023	.045	5	.023	.045	5	.023	.045	5	.023	.045	5
c	.008	.018	2	.008	.018	2	.008	.018	2	.008	.018	2
c1	.008	.015	3	.008	.015	3	.008	.015	3	.008	.015	3
D	---	3.24	6	---	2.435	6	---	1.485	6	---	1.680	6
E	.870	.920	6	.510	.620	6	.240	.310	6	.510	.620	6
E2												
E3												
e	.100 BSC			.100 BSC			.100 BSC			.100 BSC		
eA	.900 BSC			.600 BSC			.300 BSC			.600 BSC		
eA/2	.450 BSC			.300 BSC			.150 BSC			.300 BSC		
L	.125	.200	8	.125	.200	8	.125	.200	8	.125	.200	8
Q	.015	.070	9	.015	.070	9	.015	.070	9	.015	.070	9
Q1												
S1	.005	---	10	.005	---	10	.005	---	10	.005	---	10
S2	.005	---	11	.005	---	11	.005	---	11	.005	---	11
α				90°	105°		90°	105°		90°	105°	
aaa	---	.015		---	.015		---	.015		---	.015	
bbb	---	.030		---	.030		---	.030		---	.030	
ccc	---	.010		---	.010		---	.010		---	.010	
M	---	.0015	2	---	.0015	2	---	.0015	2	---	.0015	2
N	64		12	48		12	28		12	32		12
Note	1, 14											

1/ Symbols in this column that are not on a configuration drawing are not applicable to that configuration.
2/ All configurations except as noted.

1/	Variations (all dimensions shown in millimeters) 2/											
	D-13 Config. C			D-14 Config. A, C			D-15 Config. A, C			D-16 Config. A, C		
Symbol	Min	Max	Note	Min	Max	Note	Min	Max	Note	Min	Max	Note
A	---	5.72		---	5.72		---	5.72		---	5.72	
b	0.36	0.66	2	0.36	0.66	2	0.36	0.66	2	0.36	0.66	2
b1	0.36	0.58	3	0.36	0.58	3	0.36	0.58	3	0.36	0.58	3
b2	1.14	1.65	4	1.14	1.65	4	1.14	1.65	4	1.14	1.65	4
b3	0.58	1.14	5	0.58	1.14	5	0.58	1.14	5	0.58	1.14	5
c	0.20	0.46	2	0.20	0.46	2	0.20	0.46	2	0.20	0.46	2
c1	0.20	0.38	3	0.20	0.38	3	0.20	0.38	3	0.20	0.38	3
D	---	82.30	6	---	61.85	6	---	37.72	6	---	42.67	6
E	22.10	23.37	6	12.95	15.75	6	6.10	7.87	6	12.95	15.75	6
E2												
E3												
e	2.54 BSC			2.54 BSC			2.54 BSC			2.54 BSC		
eA	22.86 BSC			15.24 BSC			7.62 BSC			15.24 BSC		
eA/2	11.43 BSC			7.62 BSC			3.81 BSC			7.62 BSC		
L	3.18	5.08	8	3.18	5.08	8	3.18	5.08	8	3.18	5.08	8
Q	0.38	1.78	9	0.38	1.78	9	0.38	1.78	9	0.38	1.78	9
Q1												
S1	0.13	---	10	0.13	---	10	0.13	---	10	0.13	---	10
S2	0.13	---	11	0.13	---	11	0.13	---	11	0.13	---	11
α				90°	105°		90°	105°		90°	105°	
aaa	---	0.38		---	0.38		---	0.38		---	0.38	
bbb	---	0.76		---	0.76		---	0.76		---	0.76	
ccc	---	0.25		---	0.25		---	0.25		---	0.25	
M	---	0.038	2	---	0.038	2	---	0.038	2	---	0.038	2
N	64		12	48		12	28		12	32		12
Note	1,14											

1/ Symbols in this column that are not on a configuration drawing are not applicable to that configuration.
2/ All configurations except as noted.

NOTES:

1. Index area: A notch or a pin one identification mark shall be located adjacent to pin one and shall be located within the shaded area shown. The manufacturer's identification shall not be used as a pin one identification mark.
2. The maximum limits of lead dimensions b and c or M shall be measured at the centroid of the finished lead surfaces, when solder dip or tin plate lead finish is applied.
3. Dimensions b1 and c1 apply to lead base metal only. Dimension M applies to lead plating and finish thickness.
4. The b2 minimum dimension of .045 inch (1.14 mm) was implemented 30 September 1992. Until that date, a minimum dimension of .038 (0.97 mm) was acceptable. See 5.2.4
5. Corner leads (1, N, N/2, and N/2+1) may be configured as shown in detail A. For this configuration dimension b3 replaces dimension b2.
6. This dimension allows for off-center lid, meniscus, and glass overrun.
7. For configuration B, no organic or polymeric materials shall be molded to the bottom of the package to cover the leads.
8. Pointed or rounded lead tips as shown in details B and C are preferred to ease insertion, but are not mandatory.
9. Dimension Q shall be measured from the seating plane to the base plane.
10. Measure dimension S1 at all four corners, see 5.2.5.
11. Measure dimension S2 from the top of the ceramic body to the nearest metallization or lead
12. N is the maximum number of terminal positions.
13. Braze fillet shall be concave. The maximum dimensions of this fillet include solder dip or tin plate lead finish, if applied.
14. See tables VI and VII for descriptive type designators.

REQUIREMENT 103A

CAN STYLE

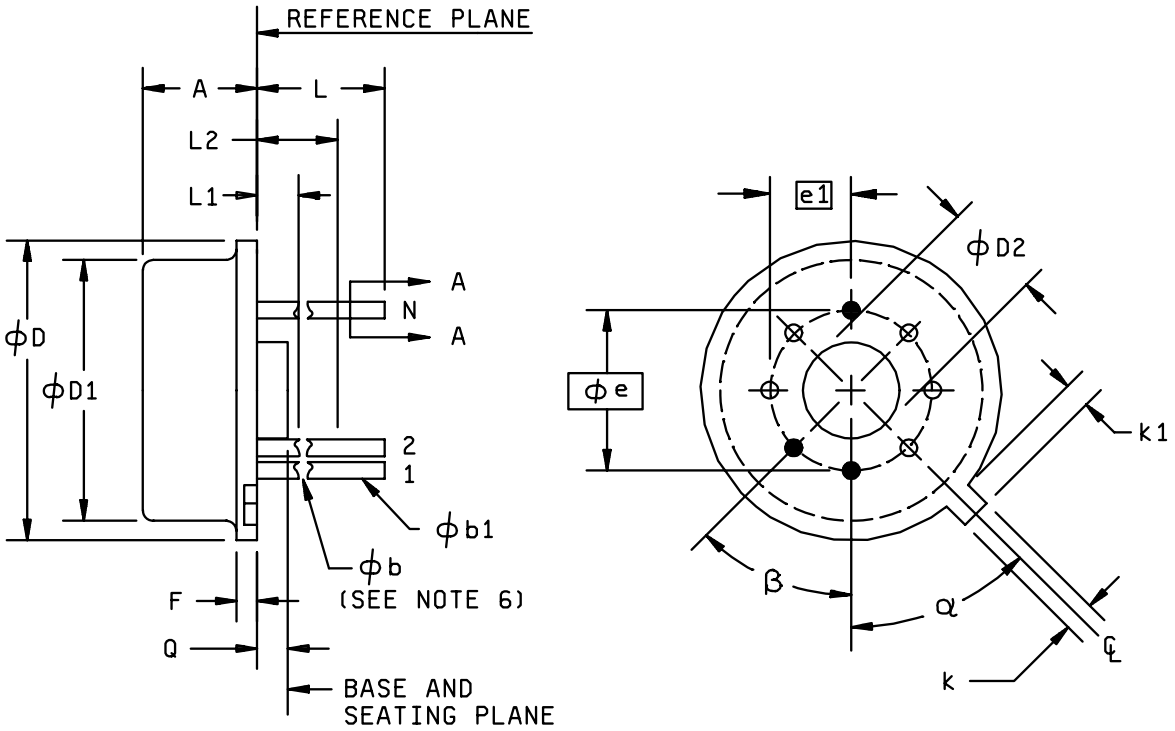

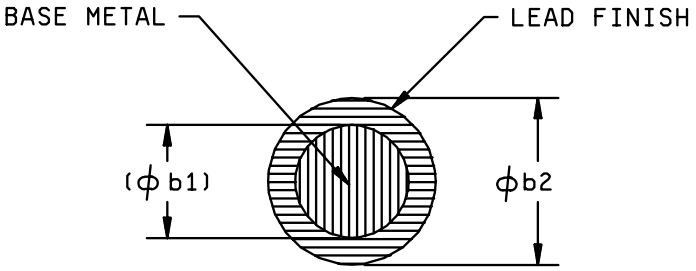

SECTION A-A

Symbol	Variations (all dimensions shown in inches)											
	A1			A2			A3			A4		
	Min	Max	Note	Min	Max	Note	Min	Max	Note	Min	Max	Note
A	.165	.185		.165	.185		.165	.185		.240	.260	
∅b	.016	.019	1	.016	.019	1	.016	.019	1	.016	.019	1
∅b1	.016	.021	1	.016	.021	1	.016	.021	1	.016	.021	1
∅b2	.016	.024		.016	.024		.016	.024		.016	.024	
∅D	.335	.375		.335	.375		.335	.375		.350	.370	
∅D1	.305	.335		.305	.335		.305	.335		.315	.335	
∅D2	.110	.160		.110	.160		.110	.160				2
e	.200 BSC			.230 BSC			.230 BSC			.200 BSC		
e1	.100 BSC			.115 BSC			.115 BSC			.100 BSC		
F	---	.040		---	.040		---	.040		.009	.125	
k	.027	.034		.027	.034		.027	.034		.027	.034	
k1	.027	.045	3	.027	.045	3	.027	.045	3	.029	.040	3
L	.500	.750	1	.500	.750	1	.500	.750	1	.500	.750	1
L1	---	.050	1	---	.050	1	---	.050	1	---	.050	1
L2	.250	---	1	.250	---	1	.250	---	1	.250	---	1
Q	.010	.045		.010	.045		.010	.045				2
α	45° BSC		4	36° BSC		4	30° BSC		4	45° BSC		4
β	45° BSC		4	36° BSC		4	30° BSC		4	90° BSC		4
N	8		5	10		5	12		5	3		5
Notes	6, 7, 8											

	Variations (all dimensions shown in millimeters)											
	A1			A2			A3			A4		
Symbol	Min	Max	Note	Min	Max	Note	Min	Max	Note	Min	Max	Note
A	4.19	4.70		4.19	4.70		4.19	4.70		6.10	6.60	
∅b	0.41	0.48	1	0.41	0.48	1	0.41	0.48	1	0.41	0.48	1
∅b1	0.41	0.53	1	0.41	0.53	1	0.41	0.53	1	0.41	0.53	1
∅b2	0.41	0.61		0.41	0.61		0.41	0.61		0.41	0.61	
∅D	8.51	9.52		8.51	9.52		8.51	9.52		8.89	9.40	
∅D1	7.75	8.51		7.75	8.51		7.75	8.51		8.00	8.51	
∅D2	2.79	4.06		2.79	4.06		2.79	4.06				2
e	5.08 BSC			5.84 BSC			5.84 BSC			5.08 BSC		
e1	2.54 BSC			2.92 BSC			2.92 BSC			2.54 BSC		
F	---	1.02		---	1.02		---	1.02		---	1.02	
k	0.69	0.86		0.69	0.86		0.69	0.86		0.69	0.86	
k1	0.69	1.14	3	0.69	1.14	3	0.69	1.14	3	0.69	1.14	3
L	12.70	19.05	1	12.70	19.05	1	12.70	19.05	1	12.70	19.05	1
L1	---	1.27	1	---	1.27	1	---	1.27	1	---	1.27	1
L2	6.35	---	1	6.35	---	1	6.35	---	1	6.35	---	1
Q	0.25	1.14		0.25	1.14		0.25	1.14				2
α	45° BSC		4	36° BSC		4	30° BSC		4	45° BSC		4
β	45° BSC		4	36° BSC		4	30° BSC		4	90° BSC		4
N	8		5	10		5	12		5	3		5
Notes	6, 7, 8											

NOTES:

1. (All leads) ∅b applies between L1 and L2. ∅b1 applies between L2 and .500 *inches* from the reference plane. Diameter is uncontrolled in L1 and beyond .500 *inches* from the reference plane.
2. The package feature described by dimension symbols ∅D2 and Q does not exist for variation A4; therefore the reference, base, and seating planes are the same for this variation.
3. Measured from maximum diameter of the product.
4. α is the basic spacing from the centerline of the tab to terminal 1 and is the basic spacing of each lead or lead position (N - 1 places) from α , looking at the bottom of the package.
5. N is the maximum number of terminal positions.
6. Leads having a maximum diameter .019 inches measured in gauging plane .054 +.001 -.000 inches below the base plane of the product shall be within .007 inches of their true position relative to a maximum width tab.
7. This style package may be measured by direct methods or by gauge.
8. See table VI for descriptive type designators.

REQUIREMENT 104A

CERAMIC, METAL-SEALED, SINGLE-IN-LINE PACKAGE STYLE

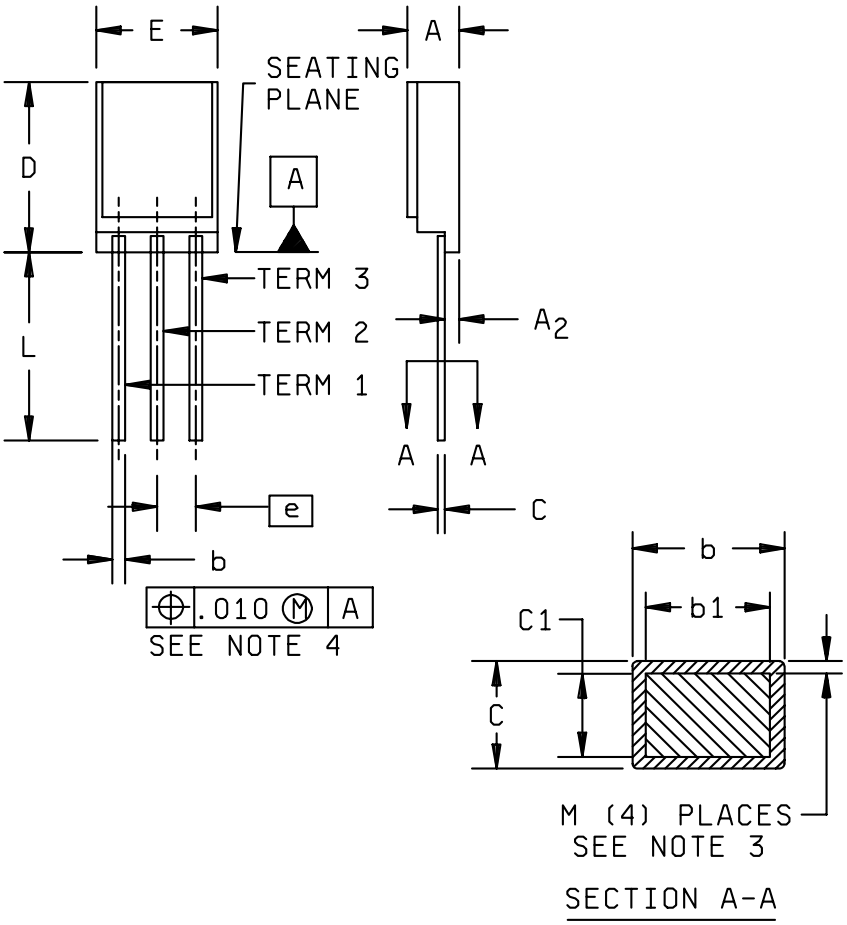

Symbol	S1 (inches)				S1 (millimeters)			
	Min	Nom	Max	Note	Min	Nom	Max	Note
A	.055	.060	.065		1.40	1.52	1.65	
A2	.012	.014	.018		0.30	0.36	0.46	
b	.014	---	.021	3	0.36	---	0.53	3
b1	.014	.016	.018	3	0.36	0.41	0.46	3
c	.008	---	.017		0.20	---	0.43	
c1	.008	.010	.014	3	0.20	0.25	0.36	3
D	.220	.225	.240		5.59	5.72	6.10	
e	.050 BSC				1.27 BSC			
E	.154	.160	.166		3.91	4.06	4.22	
L	.475	---	---		12.06	---	---	
M	---	---	.003	3	---	---	.08	3
Note	1, 2							

NOTES:

1. Dimensioning and tolerancing in accordance with ASME Y14.5M-1994.
2. Controlling dimension, inch.
3. Maximum increase when lead finish A or B is applied.
4. The increase in the b dimension, as a result of lead finishes, does not change the positional tolerance, .010, which is applied at MMC of .018.

REQUIREMENT 105

CERAMIC, SQUARE AND RECTANGULAR LEADLESS CHIP CARRIER STYLES

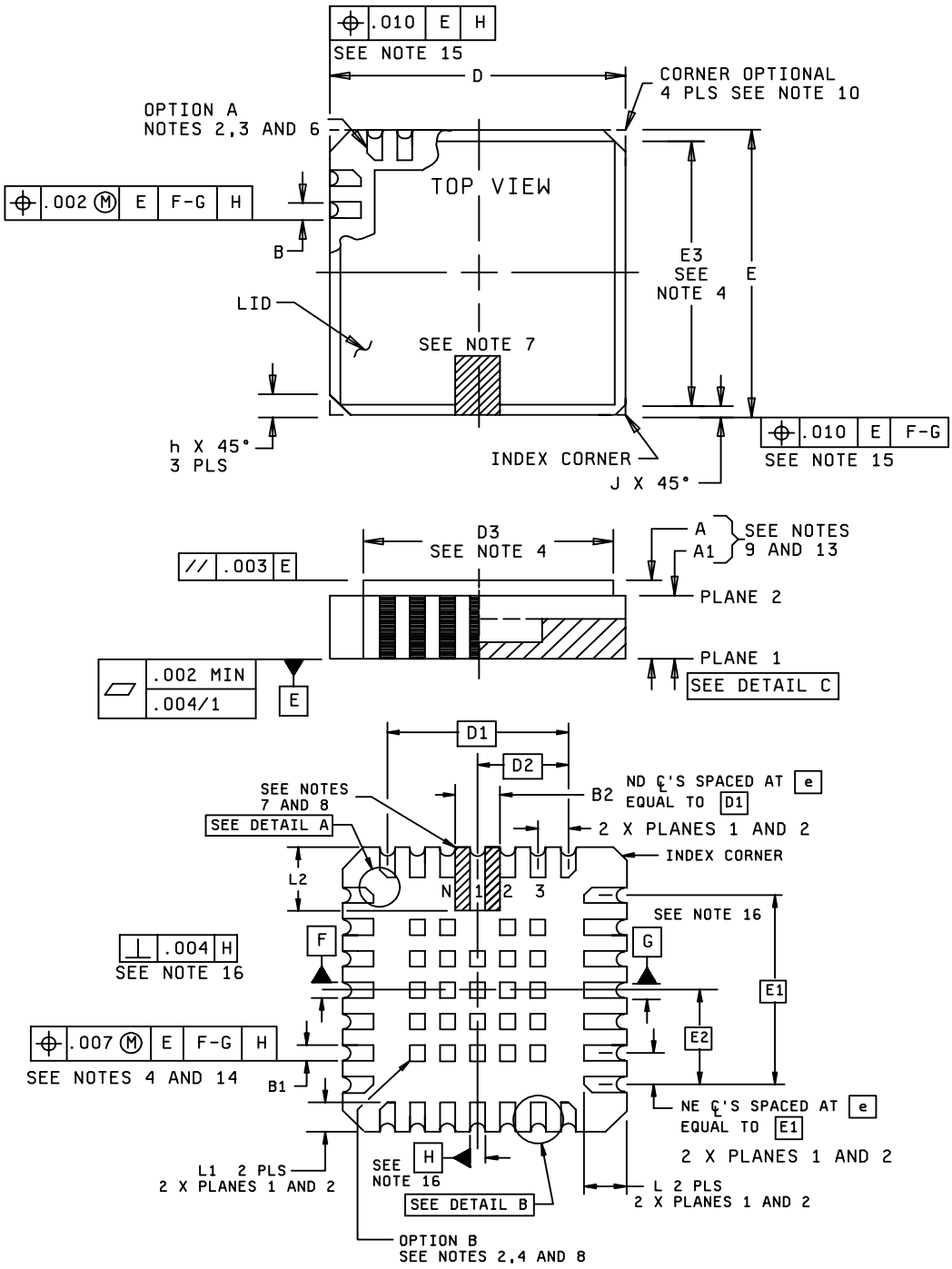

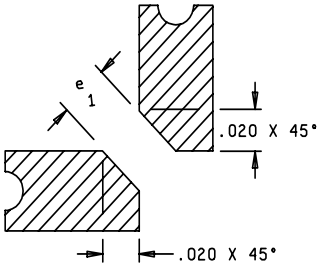

DETAIL A
(SEE NOTE 12)

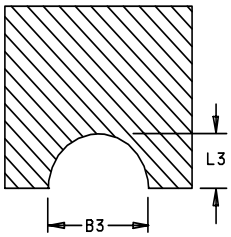

DETAIL B
(SEE NOTE 11)

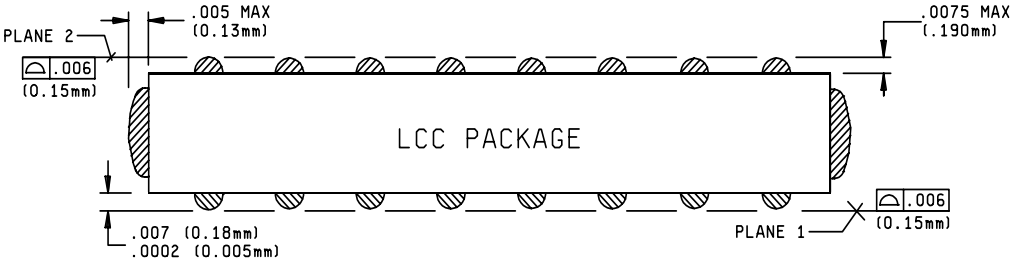

= SOLDER

DETAIL C
SOLDER DIPPED LEADLESS CHIP CARRIER

	Square only - variations (all dimensions shown in inches)											
	C-1			C-1A			C-2			C-2A		
Symbol	Min	Max	Note	Min	Max	Note	Min	Max	Note	Min	Max	Note
A	.060	.100	9, 13	.060	.075	9, 13	.060	.100	9, 13	.060	.078	9, 13
A1	.050	.088		.050	.065		.050	.088		---	---	
B	---	---		---	---		---	---		---	---	
B1	.022	.028	4, 6, 14	.022	.028	4, 6, 14	.022	.028	4, 6, 14	.022	.028	4, 6, 14
B2	.072 REF		7, 8	.072 REF		7, 8	.072 REF		7, 8	.072 REF		7, 8
B3	.006	.022	11	.006	.022	11	.006	.022	11	.006	.022	11
D/E	.292	.308		.292	.308		.342	.358		.342	.358	
D1/E1	.150 BSC			.150 BSC			.200 BSC			.200 BSC		
D2/E2	.075 BSC		16	.075 BSC		16	.100 BSC		16	.100 BSC		16
D3/E3	---	.308	4	---	.308	4	---	.358	4	---	.358	4
e	.050 BSC			.050 BSC			.050 BSC			.050 BSC		
e1	.015	---	4, 12	.015	---	4, 12	.015	---	4, 12	.015	---	4, 12
h	.040 REF		10	.040 REF		10	.040 REF		10	.040 REF		10
j	.020 REF		10	.020 REF		10	.020 REF		10	.020 REF		10
L	.045	.055		.045	.055		.045	.055		.045	.055	
L1	.045	.055		.045	.055		.045	.055		.045	.055	
L2	.075	.095	7, 8	.075	.095	7, 8	.075	.095	7, 8	.075	.095	7, 8
L3	.003	.015	11	.003	.015	11	.003	.015	11	.003	.015	11
ND/NE	4		5	4		5	5		5	5		5
N	16		5	16		5	20		5	20		5
Note	1											

	Square only - variations (all dimensions shown in millimeters)											
	C-1			C-1A			C-2			C-2A		
Symbol	Min	Max	Note	Min	Max	Note	Min	Max	Note	Min	Max	Note
A	1.52	2.54	9, 13	1.52	1.91	9, 13	1.52	2.54	9, 13	1.52	1.98	9, 13
A1	1.27	2.23		1.27	1.65		1.27	2.23		---	---	
B	---	---		---	---		---	---		---	---	
B1	0.56	0.71	4, 6, 14	0.56	0.71	4, 6, 14	0.56	0.71	4, 6, 14	0.56	0.71	4, 6, 14
B2	1.83 REF		7, 8	1.83 REF		7, 8	1.83 REF		7, 8	1.83 REF		7, 8
B3	0.15	0.56	11	0.15	0.56	11	0.15	0.56	11	0.15	0.56	11
D/E	7.42	7.82		7.42	7.82		8.69	9.09		8.69	9.09	
D1/E1	3.81 BSC			3.81 BSC			5.08 BSC			5.08 BSC		
D2/E2	1.90 BSC		16	1.90 BSC		16	2.54 BSC		16	2.54 BSC		16
D3/E3	---	7.82	4	---	7.82	4	---	9.09	4	---	9.09	4
e	1.27 BSC			1.27 BSC			1.27 BSC			1.27 BSC		
e1	0.38	---	4, 12	0.38	---	4,12	0.38	---	4, 12	0.38	---	4, 12
h	1.02 REF		10	1.02 REF		10	1.02 REF		10	1.02 REF		10
j	0.51 REF		10	0.51 REF		10	0.51 REF		10	0.51 REF		10
L	1.14	1.40		1.14	1.40		1.14	1.40		1.14	1.40	
L1	1.14	1.40		1.14	1.40		1.14	1.40		1.14	1.40	
L2	1.90	2.41	7, 8	1.90	2.41	7, 8	1.90	2.41	7, 8	1.90	2.41	7, 8
L3	0.08	0.38	11	0.08	0.38	11	0.08	0.38	11	0.08	0.38	11
ND/NE	4		5	4		5	5		5	5		5
N	16		5	16		5	20		5	20		5
Note	1											

	Square only - variations (all dimensions shown in inches)											
	C-3			C-3A			C-4			C-4A		
Symbol	Min	Max	Note	Min	Max	Note	Min	Max	Note	Min	Max	Note
A	.060	.100	9, 13	.060	.075	9, 13	.060	.100	9, 13	.060	.075	9, 13
A1	.050	.088		.050	.065		.050	.088		.050	.065	
B	---	---		---	---		---	---		---	---	
B1	.022	.028	4, 6, 14	.022	.028	4, 6, 14	.022	.028	4, 6, 14	.022	.028	4, 6, 14
B2	.072 REF		7, 8	.072 REF		7, 8	.072 REF		7, 8	.072 REF		7, 8
B3	.006	.022	11	.006	.022	11	.006	.022	11	.006	.022	11
D/E	.395	.410		.395	.410		.442	.460		.442	.460	
D1/E1	.250 BSC			.250 BSC			.300 BSC			.300 BSC		
D2/E2	.125 BSC		16	.125 BSC		16	.150 BSC		16	.150 BSC		16
D3/E3	---	.410	4	---	.410	4	---	.460	4	---	.460	4
e	.050 BSC			.050 BSC			.050 BSC			.050 BSC		
e1	.015	---	4, 12	.015	---	4, 12	.015	---	4, 12	.015	---	4, 12
h	.040 REF		10	.040 REF		10	.040 REF		10	.040 REF		10
j	.020 REF		10	.020 REF		10	.020 REF		10	.020 REF		10
L	.045	.055		.045	.055		.045	.055		.045	.055	
L1	.045	.055		.045	.055		.045	.055		.045	.055	
L2	.075	.095	7, 8	.075	.095	7, 8	.075	.095	7, 8	.075	.095	7, 8
L3	.003	.015	11	.003	.015	11	.003	.015	11	.003	.015	11
ND/NE	6		5	6		5	7		5	7		5
N	24		5	24		5	28		5	28		5
Note	1											

	Square only - variations (all dimensions shown in millimeters)											
	C-3			C-3A			C-4			C-4A		
Symbol	Min	Max	Note	Min	Max	Note	Min	Max	Note	Min	Max	Note
A	1.52	2.54	9, 13	1.52	1.91	9, 13	1.52	2.54	9, 13	1.52	1.91	9, 13
A1	1.27	2.23		1.27	1.65		1.27	2.23		1.27	1.65	
B	---	---		---	---		---	---		---	---	
B1	0.56	0.71	4, 6, 14	0.56	0.71	4, 6, 14	0.56	0.71	4, 6, 14	0.56	0.71	4, 6, 14
B2	1.83 REF		7, 8	1.83 REF		7, 8	1.83 REF		7, 8	1.83 REF		7, 8
B3	0.15	0.56	11	0.15	0.56	11	0.15	0.56	11	0.15	0.56	11
D/E	10.03	10.41		10.03	10.41		11.23	11.68		11.23	11.68	
D1/E1	6.35 BSC			6.35 BSC			7.62 BSC			7.62 BSC		
D2/E2	3.18 BSC		16	3.18 BSC		16	3.81 BSC		16	3.81 BSC		16
D3/E3	---	10.41	4	---	10.41	4	---	11.68	4	---	11.68	4
e	1.27 BSC			1.27 BSC			1.27 BSC			1.27 BSC		
e1	0.38	---		0.38	---		0.38	---		0.38	---	
h	1.02 REF		10	1.02 REF		10	1.02 REF		10	1.02 REF		10
j	0.51 REF		10	0.51 REF		10	0.51 REF		10	0.51 REF		10
L	1.14	1.40		1.14	1.40		1.14	1.40		1.14	1.40	
L1	1.14	1.40		1.14	1.40		1.14	1.40		1.14	1.40	
L2	1.90	2.41	7, 8	1.90	2.41	7, 8	1.90	2.41	7, 8	1.90	2.41	7, 8
L3	0.08	0.38	11	0.08	0.38	11	0.08	0.38	11	0.08	0.38	11
ND/NE	6		5	6		5	7		5	7		5
N	24		5	24		5	28		5	28		5
Note	1											

	Square only - variations (all dimensions shown in inches)											
	C-5			C-6			C-7			C-8		
Symbol	Min	Max	Note	Min	Max	Note	Min	Max	Note	Min	Max	Note
A	.064	.120	9, 13	.082	.120	9, 13	.082	.120	9, 13	.082	.120	9, 13
A1	.054	.088		.072	.088		.072	.094		.072	.094	
B	.033	.039	6	.033	.039	6	.033	.039	6	.033	.039	6
B1	.022	.028	4, 6, 14	.022	.028	4, 6, 14	.022	.028	4, 6, 14	.022	.028	4, 6, 14
B2	.072 REF		7, 8	.072 REF		7, 8	.072 REF		7, 8	.072 REF		7, 8
B3	.006	.022	11	.006	.022	11	.006	.022	11	.006	.022	11
D/E	.640	.662		.739	.761		.938	.962		1.135	1.165	
D1/E1	.500 BSC			.600 BSC			.800 BSC			1.000 BSC		
D2/E2	.250 BSC		16	.300 BSC		16	.400 BSC		16	.500 BSC		16
D3/E3	---	.662	4	---	.662	4	---	.862	4	---	1.065	4
e	.050 BSC			.050 BSC			.050 BSC			.050 BSC		
e1	.015	---	4, 12	.015	---	4, 12	.015	---	4, 12	.015	---	4, 12
h	.040 REF		10	.040 REF		10	.040 REF		10	.040 REF		10
j	.020 REF		10	.020 REF		10	.020 REF		10	.020 REF		10
L	.045	.055		.045	.055		.045	.055		.045	.055	
L1	.045	.055		.045	.055		.045	.055		.045	.055	
L2	.075	.095	7, 8	.075	.095	7, 8	.075	.095	7, 8	.075	.095	7, 8
L3	.003	.015	11	.003	.015	11	.003	.015	11	.003	.015	11
ND/NE	11		5	13		5	17		5	21		5
N	44		5	52		5	68		5	84		5
Note	1											

	Square only - variations (all dimensions shown in millimeters)											
	C-5			C-6			C-7			C-8		
Symbol	Min	Max	Note	Min	Max	Note	Min	Max	Note	Min	Max	Note
A	1.63	3.05	9, 13	2.08	3.05	9, 13	2.08	3.05	9, 13	2.08	3.05	9, 13
A1	1.37	2.24		1.83	2.24		1.83	2.39		1.83	2.39	
B	0.84	0.99	6	0.84	0.99	6	0.84	0.99	6	0.84	0.99	6
B1	0.56	0.71	4, 6, 14	0.56	0.71	4, 6, 14	0.56	0.71	4, 6, 14	0.56	0.71	4, 6, 14
B2	1.83 REF		7, 8	1.83 REF		7, 8	1.83 REF		7, 8	1.83 REF		7, 8
B3	0.15	0.56	11	0.15	0.56	11	0.15	0.56	11	0.15	0.56	11
D/E	16.26	16.81		18.77	19.33		23.83	24.43		28.83	29.59	
D1/E1	12.70 BSC			15.24 BSC			20.32 BSC			25.40 BSC		
D2/E2	6.35 BSC		16	7.62 BSC		16	10.16 BSC		16	12.70 BSC		16
D3/E3	---	16.81	4	---	16.81	4	---	21.89	4	---	27.05	4
e	1.27 BSC			1.27 BSC			1.27 BSC			1.27 BSC		
e1	0.38	---	4, 12	0.38	---	4, 12	0.38	---	4, 12	0.38	---	4, 12
h	1.02 REF		10	1.02 REF		10	1.02 REF		10	1.02 REF		10
j	0.51 REF		10	0.51 REF		10	0.51 REF		10	0.51 REF		10
L	1.14	1.40		1.14	1.40		1.14	1.40		1.14	1.40	
L1	1.14	1.40		1.14	1.40		1.14	1.40		1.14	1.40	
L2	1.90	2.41	7, 8	1.90	2.41	7, 8	1.90	2.41	7, 8	1.90	2.41	7, 8
L3	0.08	0.38	11	0.08	0.38	11	0.08	0.38	11	0.08	0.38	11
ND/NE	11		5	13		5	17		5	21		5
N	44		5	52		5	68		5	84		5
Note	1											

	Rectangular only - variations (all dimensions shown in inches)											
	C-9			C-9A			C-10			C-10A		
Symbol	Min	Max	Note	Min	Max	Note	Min	Max	Note	Min	Max	Note
A	.060	.120	9, 13	.060	.075	9, 13	.060	.120	9, 13	.060	.075	9, 13
A1	.050	.088		.050	.065		.050	.088		.050	.065	
B	---	---		---	---		---	---		---	---	
B1	.022	.028	4, 6, 14	.022	.028	4,6, 14	.022	.028	4, 6, 14	.022	.028	4, 6, 14
B2	.072 REF		7, 8	.072 REF		7, 8	.072 REF		7, 8	.072 REF		7, 8
B3	.006	.022	11	.006	.022	11	.006	.022	11	.006	.022	11
D	.280	.305		.280	.305		.280	.305		.280	.305	
D1	.150 BSC			.150 BSC			.150 BSC			.150 BSC		
D2	.075 BSC		16	.075 BSC		16	.075 BSC		16	.075 BSC		16
D3	---	.305	4	---	.305	4	---	.305	4	---	.305	4
E	.345	.365		.345	.365		.417	.440		.417	.440	
E1	.200 BSC			.200 BSC			.200 BSC			.200 BSC		
E2	.100 BSC		16	.100 BSC		16	.100 BSC		16	.100 BSC		16
E3	---	.365	4	---	.365	4	---	.440	4	---	.440	4
e	.050 BSC			.050 BSC			.050 BSC			.050 BSC		
e1	.015	---	4, 12	.015	---	4, 12	.015	---	4, 12	.015	---	4, 12
h	.040 REF		10	.040 REF		10	.040 REF		10	.040 REF		10
j	.020 REF		10	.020 REF		10	.020 REF		10	.020 REF		10
L	.045	.055		.045	.055		.045	.055		.045	.055	
L1	.045	.055		.045	.055		.075	.090		.075	.090	
L2	.075	.095	7, 8	.075	.095	7, 8	.075	.148	7, 8	.075	.148	7, 8
L3	.003	.015	11	.003	.015	11	.003	.015	11	.003	.015	11
ND	4		5	4		5	4		5	4		5
NE	5		5	5		5	5		5	5		5
N	18		5	18		5	18		5	18		5
Note	1											

	Rectangular only - variations (all dimensions shown in millimeters)											
	C-9			C-9A			C-10			C-10A		
Symbol	Min	Max	Note	Min	Max	Note	Min	Max	Note	Min	Max	Note
A	1.52	3.05	9, 13	1.52	1.90	9, 13	1.52	3.05	9, 13	1.52	1.90	9, 13
A1	1.27	2.24		1.27	1.65		1.27	2.24		1.27	1.65	
B	---	---		---	---		---	---		---	---	
B1	0.56	0.71	4, 6, 14	0.56	0.71	4, 6, 14	0.56	0.71	4, 6, 14	0.56	0.71	4, 6, 14
B2	1.83 REF		7, 8	1.83 REF		7, 8	1.83 REF		7, 8	1.83 REF		7, 8
B3	0.15	0.56	11	0.15	0.56	11	0.15	0.56	11	0.15	0.56	11
D	7.11	7.75		7.11	7.75		7.11	7.75		7.11	7.75	
D1	3.81 BSC			3.81 BSC			3.81 BSC			3.81 BSC		
D2	1.90 BSC		16	1.90 BSC		16	1.90 BSC		16	1.90 BSC		16
D3	---	7.75	4	---	7.75	4	---	7.75	4	---	7.75	4
E	8.76	9.27		8.76	9.27		10.59	11.18		10.59	11.18	
E1	5.08 BSC			5.08 BSC			5.08 BSC			5.08 BSC		
E2	2.54 BSC		16	2.54 BSC		16	2.54 BSC		16	2.54 BSC		16
E3	---	9.27	4	---	9.27	4	---	11.18	4	---	11.18	4
e	1.27 BSC			1.27 BSC			1.27 BSC			1.27 BSC		
e1	0.38	---	4, 12	0.38	---	4, 12	0.38	---	4, 12	0.38	---	4, 12
h	1.02 REF		10	1.02 REF		10	1.02 REF		10	1.02 REF		10
j	0.51 REF		10	0.51 REF		10	0.51 REF		10	0.51 REF		10
L	1.14	1.40		1.14	1.40		1.14	1.40		1.14	1.40	
L1	1.14	1.40		1.14	1.40		1.90	2.29		1.90	2.29	
L2	1.90	2.41	7, 8	1.90	2.41	7, 8	1.90	3.76	7, 8	1.90	3.76	7, 8
L3	0.08	0.38	11	0.08	0.38	11	0.08	0.38	11	0.08	0.38	11
ND	4		5	4		5	4		5	4		5
NE	5		5	5		5	5		5	5		5
N	18		5	18		5	18		5	18		5
Note	1											

	Rectangular only - variations (all dimensions shown in inches)											
	C-11			C-11A			C-12			C-12A		
Symbol	Min	Max	Note	Min	Max	Note	Min	Max	Note	Min	Max	Note
A	.060	.120	9, 13	.060	.075	9, 13	.060	.120	9, 13	.060	.075	9, 13
A1	.050	.088		.050	.065		.050	.088		.050	.065	
B	---	---		---	---		---	---		---	---	
B1	.022	.028	4, 6, 14	.022	.028	4, 6, 14	.022	.028	4, 6, 14	.022	.028	4, 6, 14
B2	.072 REF		7, 8	.072 REF		7, 8	.072 REF		7, 8	.072 REF		7, 8
B3	.006	.022	11	.006	.022	11	.006	.022	11	.006	.022	11
D	.342	.358		.342	.358		.442	.458		.442	.458	
D1	.200 BSC			.200 BSC			.300 BSC			.300 BSC		
D2	.100 BSC		16	.100 BSC		16	.150 BSC		16	.150 BSC		16
D3	---	.358	4	---	.358	4	---	.458	4	---	.458	4
E	.540	.560		.540	.560		.540	.560		.540	.560	
E1	.400 BSC			.400 BSC			.400 BSC			.400 BSC		
E2	.200 BSC		16	.200 BSC		16	.200 BSC		16	.200 BSC		16
E3	---	.558	4	---	.558	4	---	.558	4	---	.558	4
e	.050 BSC			.050 BSC			.050 BSC			.050 BSC		
e1	.015	---	4, 12	.015	--	4, 12	.015	---	4, 12	.015	---	4, 12
h	.040 REF		10	.040 REF		10	.040 REF		10	.040 REF		10
j	.020 REF		10	.020 REF		10	.020 REF		10	.020 REF		10
L	.045	.055		.045	.055		.045	.055		.045	.055	
L1	.045	.055		.045	.055		.045	.055		.045	.055	
L2	.075	.095	7, 8	.075	.095	7, 8	.075	.095	7, 8	.075	.095	7, 8
L3	.003	.015	11	.003	.015	11	.003	.015	11	.003	.015	11
ND	5		5	5		5	7		5	7		5
NE	9		5	9		5	9		5	9		5
N	28		5	28		5	32		5	32		5
Note	1											

	Rectangular only - variations (all dimensions shown in millimeters)											
	C-11			C-11A			C-12			C-12A		
Symbol	Min	Max	Note	Min	Max	Note	Min	Max	Note	Min	Max	Note
A	1.52	3.05	9, 13	1.52	1.91	9, 13	1.52	3.05	9, 13	1.52	1.91	9, 13
A1	1.27	2.24		1.27	1.65		1.27	2.24		1.27	1.65	
B	---	---		---	---		---	---		---	---	
B1	0.56	0.71	4, 6, 14	0.56	0.71	4, 6, 14	0.56	0.71	4, 6, 14	0.56	0.71	4, 6, 14
B2	1.83 REF		7, 8	1.83 REF		7, 8	1.83 REF		7, 8	1.83 REF		7, 8
B3	0.15	0.56	11	0.15	0.56	11	0.15	0.56	11	0.15	0.56	11
D	8.69	9.09		8.69	9.09		11.23	11.63		11.23	11.63	
D1	5.08 BSC			5.08 BSC			7.62 BSC			7.62 BSC		
D2	2.54 BSC		16	2.54 BSC		16	3.81 BSC		16	3.81 BSC		16
D3	---	9.09	4	---	9.09	4	---	11.63	4	---	11.63	4
E	13.72	14.22		13.72	14.22		13.72	14.22		13.72	14.22	
E1	10.16 BSC			10.16 BSC			10.16 BSC			10.16 BSC		
E2	5.08 BSC		16	5.08 BSC		16	5.08 BSC		16	5.08 BSC		16
E3	---	14.17	4	---	14.17	4	---	14.17	4	---	14.17	4
e	1.27 BSC			1.27 BSC			1.27 BSC			1.27 BSC		
e1	0.38	---	4, 12	0.38	---	4, 12	0.38	---	4, 12	0.38	---	4, 12
h	1.02 REF		10	1.02 REF		10	1.02 REF		10	1.02 REF		10
j	0.51 REF		10	0.51 REF		10	0.51 REF		10	0.51 REF		10
L	1.14	1.40		1.14	1.40		1.14	1.40		1.14	1.40	
L1	1.14	1.40		1.14	1.40		1.14	1.40		1.14	1.40	
L2	1.90	2.41	7, 8	1.90	2.41	7, 8	1.90	2.41	7, 8	1.90	2.41	7, 8
L3	0.08	0.38	11	0.08	0.38	11	0.08	0.38	11	0.08	0.38	11
ND	5		5	5		5	7		5	7		5
NE	9		5	9		5	9		5	9		5
N	28		5	28		5	32		5	32		5
Note	1											

	Rectangular only - variations (all dimensions shown in inches)											
	C-13			C-13A			C-14			C-15		
Symbol	Min	Max	Note	Min	Max	Note	Min	Max	Note	Min	Max	Note
A	.060	.120	9, 13	.060	.075	9, 13	.060	.120	9, 13	.060	.120	9, 13
A1	.050	.088		.050	.065		.050	.088		.050	.088	
B	---	---		---	---		---	---		---	---	
B1	.022	.028	4, 6, 14	.022	.028	4, 6, 14	.022	.028	4,6, 14	.022	.028	4, 6, 14
B2	.072 REF		7, 8	.072 REF		7, 8	.072 REF		7, 8	.072 REF		7, 8
B3	.006	.022	11	.006	.022	11	.006	.022	11	.006	.022	11
D	.280	.305		.280	.305		.145	.155		.165	.175	
D1	.150 BSC			.150 BSC			.050 BSC			.100 BSC		
D2	.075 BSC		16	.075 BSC		16	.025 BSC		16	.050BSC		16
D3	---	.305	4	---	.305	4	---	.155	4	---	.175	4
E	.420	.440		.420	.440		.215	.225		.240	.250	
E1	.250 BSC			.250 BSC								
E2	.125 BSC		16	.125 BSC		16						
E3	---	.440	4	---	.440	4	---	.225	4	---	.250	4
e	.050 BSC			.050 BSC			.050 BSC			.050 BSC		
e1	.015	---	4, 12	.015	---	4, 12						
h	.040 REF		10	.040 REF		10	---	---	10	---	---	10
j	.020 REF		10	.020 REF		10	---	---	10	---	---	10
L	.045	.055		.045	.055							
L1	.045	.055		.045	.055		.045	.055		.045	.055	
L2	.075	.095	7, 8	.075	.095	7, 8	.075	.095	7, 8	.075	.095	7, 8
L3	.003	.015	11	.003	.015	11	.003	.015	11	.003	.015	11
ND	4		5	4		5	2		5, 17	3		5, 17
NE	6		5	6		5	0		5, 17	0		5, 17
N	20		5	20		5	4		5, 17	6		5, 17
Note	1											

	Rectangular only - variations (all dimensions shown in millimeters)											
	C-13			C-13A			C-14			C-15		
Symbol	Min	Max	Note	Min	Max	Note	Min	Max	Note	Min	Max	Note
A	1.52	3.05	9, 13	1.52	1.90	9, 13	1.52	3.05	9, 13	1.52	3.05	9, 13
A1	1.27	2.23		1.27	1.65		1.27	2.24		1.27	1.65	
B	---	---		---	---		---	---		---	---	
B1	0.56	0.71	4, 6, 14	0.56	0.71	4, 6, 14	0.56	0.71	4, 6, 14	0.56	0.71	4, 6, 14
B2	1.83 REF		7, 8	1.83 REF		7, 8	1.83 REF		7, 8	1.83 REF		7, 8
B3	0.15	0.56	11	0.15	0.56	11	0.15	0.56	11	0.15	0.56	11
D	7.11	7.75		7.11	7.75		3.69	3.94		4.19	4.45	
D1	3.81 BSC			3.81 BSC			1.27 BSC			2.54 BSC		
D2	1.90 BSC		16	1.90 BSC		16	0.635 BSC		16	1.27 BSC		16
D3	---	7.75	4	---	7.75	4	---	3.94	4	---	4.45	4
E	10.67	11.18		10.67	11.18		5.46	5.72		6.10	6.35	
E1	6.35 BSC			6.35 BSC								
E2	3.17 BSC		16	3.17 BSC		16						
E3	---	11.18	4	---	11.18	4	---	5.72	4	---	6.35	4
e	1.27BSC			1.27 BSC			1.27BSC			1.27 BSC		
e1	0.38	---	4, 12	0.38	---	4, 12						
h	1.02 REF		10	1.02 REF		10	---	---	10	---	---	10
j	0.51 REF		10	0.51 REF		10	---	---	10	---	---	10
L	1.14	1.40		1.14	1.40							
L1	1.14	1.40		1.14	1.40		1.14	1.40		1.14	1.40	
L2	1.90	2.41	7, 8	1.90	2.41	7, 8	1.90	2.41	7, 8	1.90	2.41	7, 8
L3	0.08	0.38	11	0.08	0.38	11	0.08	0.38	11	0.08	0.38	11
ND	4		5	4		5	2		5, 17	3		5, 17
NE	6		5	6		5	0		5, 17	0		5, 17
N	20		5	20		5	4		5, 17	6		5, 17
Note	1											

NOTES:

1. See table VI for descriptive type designator.
2. To specify options A or B in acquisition documents, see figure 1.
3. Metallized castellations shall be connected to plane 1 terminals and extend toward plane 2 across at least two layers of ceramic or completely across all of the ceramic layers to make electrical connection with the optional plane 2 terminals.
4. Unless otherwise specified, a minimum clearance of .015 inch (0.381 mm) shall be maintained between all metallized features (e.g., lid, castellations, terminals, thermal pads, etc.).
5. Symbol "N" is the maximum number of terminals. Symbols "ND" and "NE" are the number of terminals along the sides of length "D" and "E" respectively.
6. The required plane 1 terminals and optional plane 2 terminals shall be electrically connected.
7. The index feature for terminal 1 identification, optical orientation or handling purposes, shall be within the shaded index areas shown on planes 1 and 2. Plane 1 terminal 1 identification may be an extension of the length of the metallized terminal which shall not be wider than the B_1 dimension. See note 8 for more details.
8. Plane 1 is the heat radiating surface. This surface may optionally be metallized with a checkerboard pattern of thermal conduction pads. The pad centerlines shall be aligned with the terminal centerlines. The number of pads in the pattern is determined by the following algorithm: (ND - 2) x (NE -2) see note 5. When this option exists, the thermal pad which is adjacent to terminal 1 shall be deleted.
9. Dimension "A" controls the overall package thickness. When a window lid is used, dimension "A" must increase by a minimum of .010 inch (0.254 mm) and a maximum of .040 inch (1.020 mm). The maximum "A" dimension is the package height before being solder dipped.
10. The corner shape (square, notch, radius, etc.) may vary at the manufacturer's option, from that shown on the drawing. The index corner shall be clearly unique.
11. See 5.2.6 and figure 8. Dimensions "B3" minimum and "L3" minimum and the appropriately derived castellation length define an unobstructed three dimensional space traversing all of the ceramic layers in which a castellation was designed. (Castellations are required on bottom two layers, optional on top ceramic layer.) Dimensions "B3" maximum and "L3" maximum define the maximum width and depth of the castellation at any point on its surface. Measurement of these dimensions may be made prior to solder dipping.
12. Corner metallization for terminals may have a .020 inch (0.51 mm) by 45E maximum chamfer to obtain the e_1 dimension.
13. Chip carriers shall be constructed of a minimum of two ceramic layers.
14. The pad metallization, including annular ring, at the pad-to-package edge shall be within the virtual pad width established by true position dimensioning.
15. The tolerance is intended to limit package edge anomalies caused by material protrusions, such as rough ceramic, and misaligned ceramic layers.
16. When the number of terminals per side is even, datums F, G, and H are located at the terminal array centers. When the number of terminals per side is odd, datums F, G, and H are located at the centers of the center terminals.
17. The 4 (C-14) and 6 (C-15) terminal variations have terminals on the ("D") ends of the package only. Terminal 1 for C-14 is the closest terminal to the index corner.

This page intentionally blank

REQUIREMENT 106

CERAMIC, GLASS-SEALED, GULLWING-LEAD, CHIP CARRIER STYLE

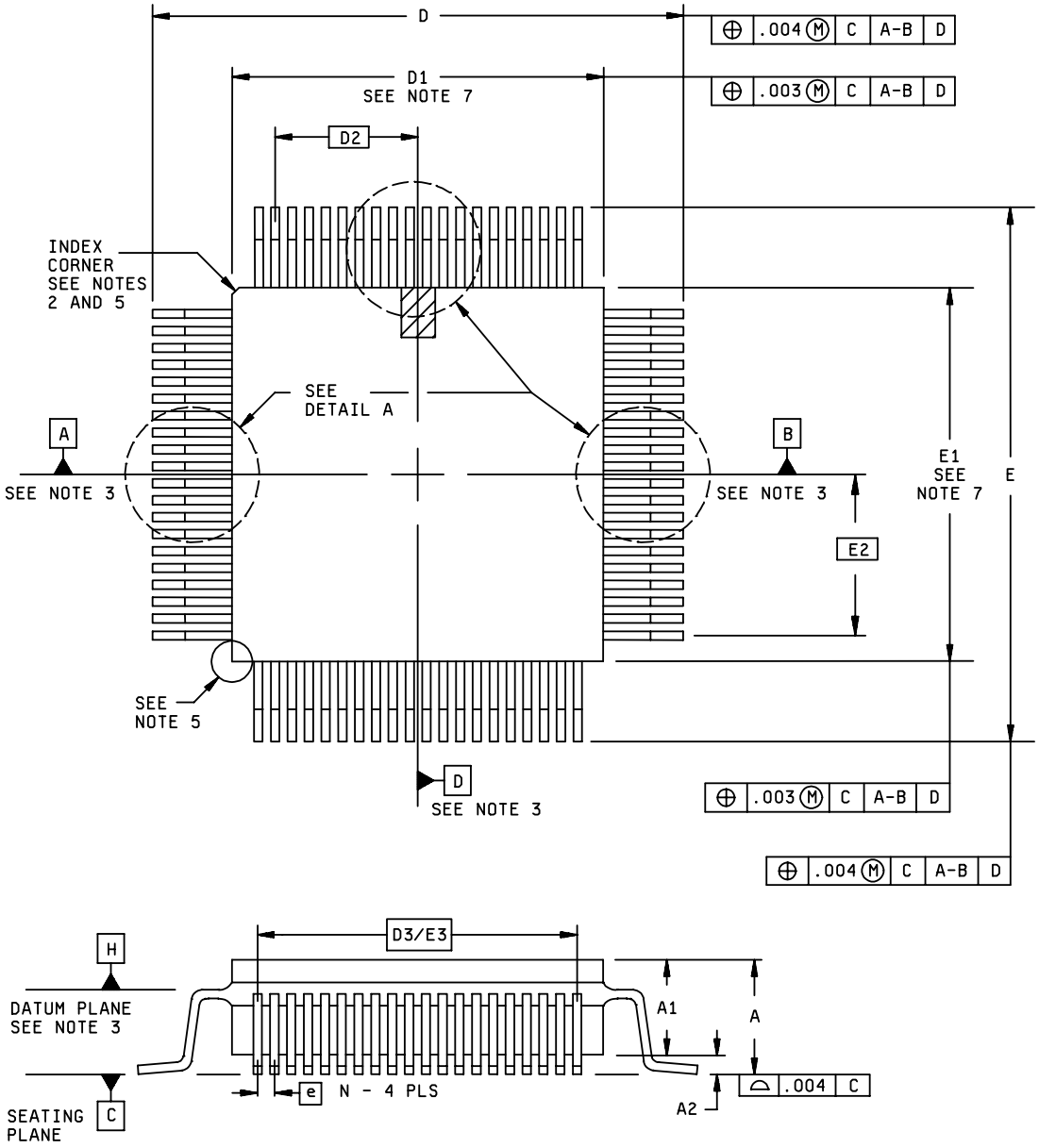

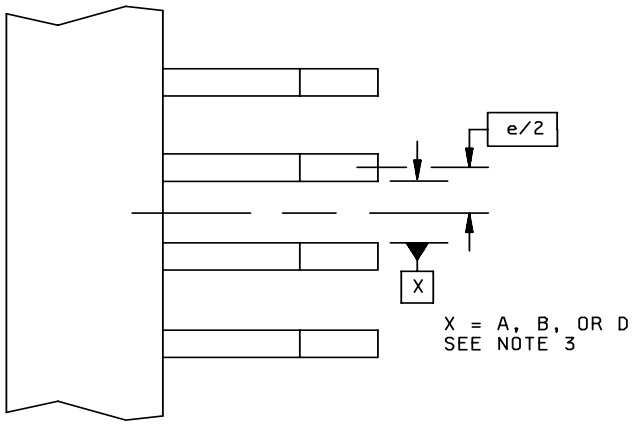

EVEN LEAD
SIDES

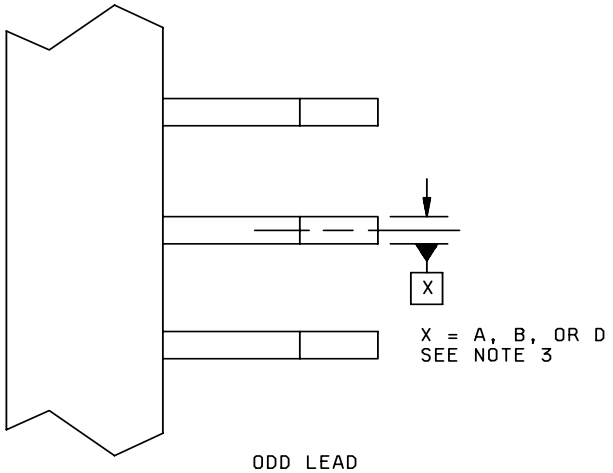

ODD LEAD
SIDES

DETAIL A

BODY DETAIL

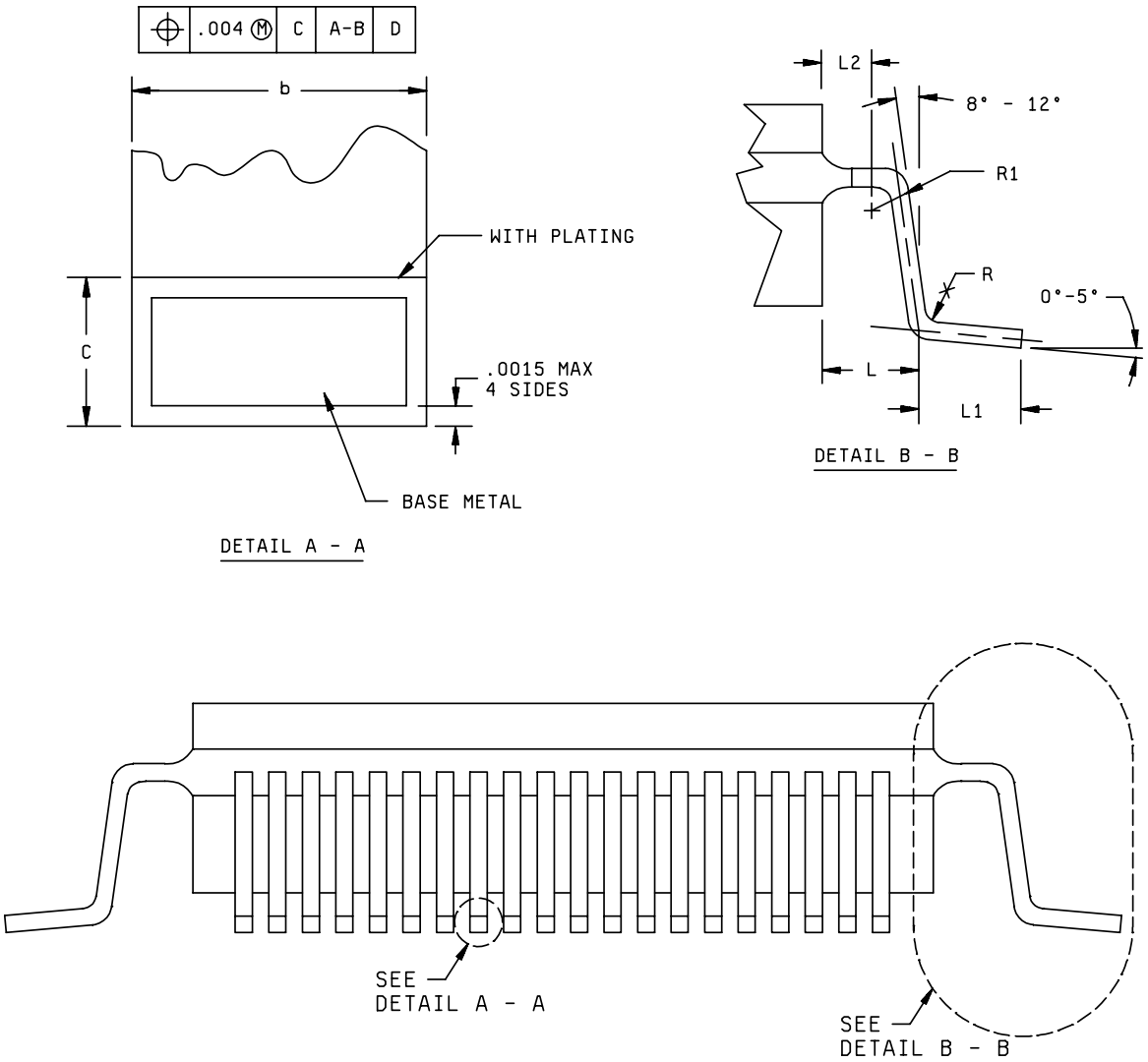

TERMINAL DETAIL

Symbol	Variations (all dimensions shown in inches)								
	C-G1			C-G2			C-G3		
	Min	Max	Note	Min	Max	Note	Min	Max	Note
A	.085	.190	4, 6	.085	.190	4, 6	.085	.190	4, 6
A1	.075	.150		.075	.150		.075	.150	
A2	.010	.040		.010	.040		.010	.040	
b	.018	.022		.018	.022		.018	.022	
c	.007	.011		.007	.011		.007	.011	
D/E	.942	.948		1.226	1.244		1.425	1.445	
D1/E1	.642	.658	7	.942	.958	7	1.142	1.158	7
D2/E2	.250 BSC			.400 BSC			.500 BSC		
D3/E3	.500 BSC			.800 BSC			1.000 BSC		
e	.050 BSC			.050 BSC			.050 BSC		
L	.140 REF			.140 REF			.140 REF		
L1	.040	---		.040	---		.040	---	
L2	.035 REF			.035 REF			.035 REF		
R	.015	---		.015	---		.015	---	
R1	NA			NA			NA		
ND/NE	11		1	17		1	21		1
N	44		1, 2	68		1, 2	84		1, 2
Note	8								

Symbol	Variations (all dimensions shown in millimeters)								
	C-G1			C-G2			C-G3		
	Min	Max	Note	Min	Max	Note	Min	Max	Note
A	2.16	4.83	4, 6	2.16	4.83	4, 6	2.16	4.83	4, 6
A1	1.91	3.81		1.91	3.81		1.91	3.81	
A2	0.25	1.02		0.25	1.02		0.25	1.02	
A	0.46	0.56		0.46	0.56		0.46	0.56	
c	0.19	0.28		0.19	0.28		0.19	0.28	
D/E	23.93	23.08		31.14	31.60		36.20	36.70	
D1/E1	16.31	16.71	7	23.93	24.33	7	29.01	29.41	7
D2/E2	6.35 BSC			10.16 BSC			12.70 BSC		
D3/E3	12.70 BSC			23.32 BSC			25.40 BSC		
e	1.27 BSC			1.27 BSC			1.27 BSC		
L	3.56 REF			3.56 REF			3.56 REF		
L1	1.02	---		1.02	---		1.02	---	
L2	0.89 REF			0.89 REF			0.89 REF		
R	0.38	---		0.38	---		0.38	---	
R1	NA			NA			NA		
ND/NE	11		1	17		1	21		1
N	44		1, 2	68		1, 2	84		1, 2
Note	8								

NOTES:

1. Symbol "N" is the maximum number of terminals. Symbols "ND" and "NE" are the number of terminals along the sides of lengths "D" and "E" respectively.
2. A terminal 1 identification mark shall be located on the first side clockwise from the index corner, within the shaded area shown. Terminal numbers shall increase in a counterclockwise direction when viewed as shown. If the identification mark is not exactly adjacent to terminal 1, terminal 1 is located as follows:
   a. If the number of terminals on a side is odd, terminal 1 is the center terminal.
   b. If the number of terminals on a side is even, terminal 1 is the terminal which is adjacent to the centerline of the terminal array in the direction closest to the index corner.
3. When the number of terminals per side is even, datums A, B, and D are located at the terminal array centers. When the number of terminals per side is odd, datums A, B, and D are located at the centers of the center terminals. The measurement point for establishing these datums is the package/lead interface at datum plane H.
4. Dimension "A" controls the overall package height. When a window lid is used, dimension "A" must increase by a minimum of .010 inch (0.254 mm) and a maximum of .040 inch (1.020 mm).
5. Corner shape (square, notch, radius, etc.) may vary from that shown on the drawing. The index corner shall be clearly unique.
6. Chip carriers shall be constructed of a minimum of two ceramic layers.
7. This dimension allows for package edge anomalies caused by material protrusion, such as rough ceramic, misaligned ceramic layers and lids, meniscus, and glass overrun.
8. The leads on this package style shall be protected from mechanical distortion and damage such that dimensions pertaining to relative lead/body "true positions" and lead "coplanarity" are always maintained until the next higher level package attachment process is complete. Package lead protection mechanisms (tie bars, carriers, etc.) are not shown on the drawing; however, when electronic devices contained in this package style are shipped for use in Government equipment, or shipped directly to the Government as spare parts or mechanical qualification samples, lead protection shall be in place.
9. The quad leaded chip carrier drawings in this outline requirement show a "gullwing" lead configuration. An optional lead configuration can be specified for unformed (straight) leads, see figure 1 and table V concerning how to designate an option. When either option is selected and straight leads are subsequently formed by the electronic device user, the resultant lead configuration shall conform to the "gullwing" lead dimensions and coplanarity requirements specified herein.
10. See table VI for descriptive type designator.

REQUIREMENT 107A

CERAMIC, METAL-SEALED, GULLWING-LEAD, CHIP CARRIER STYLE

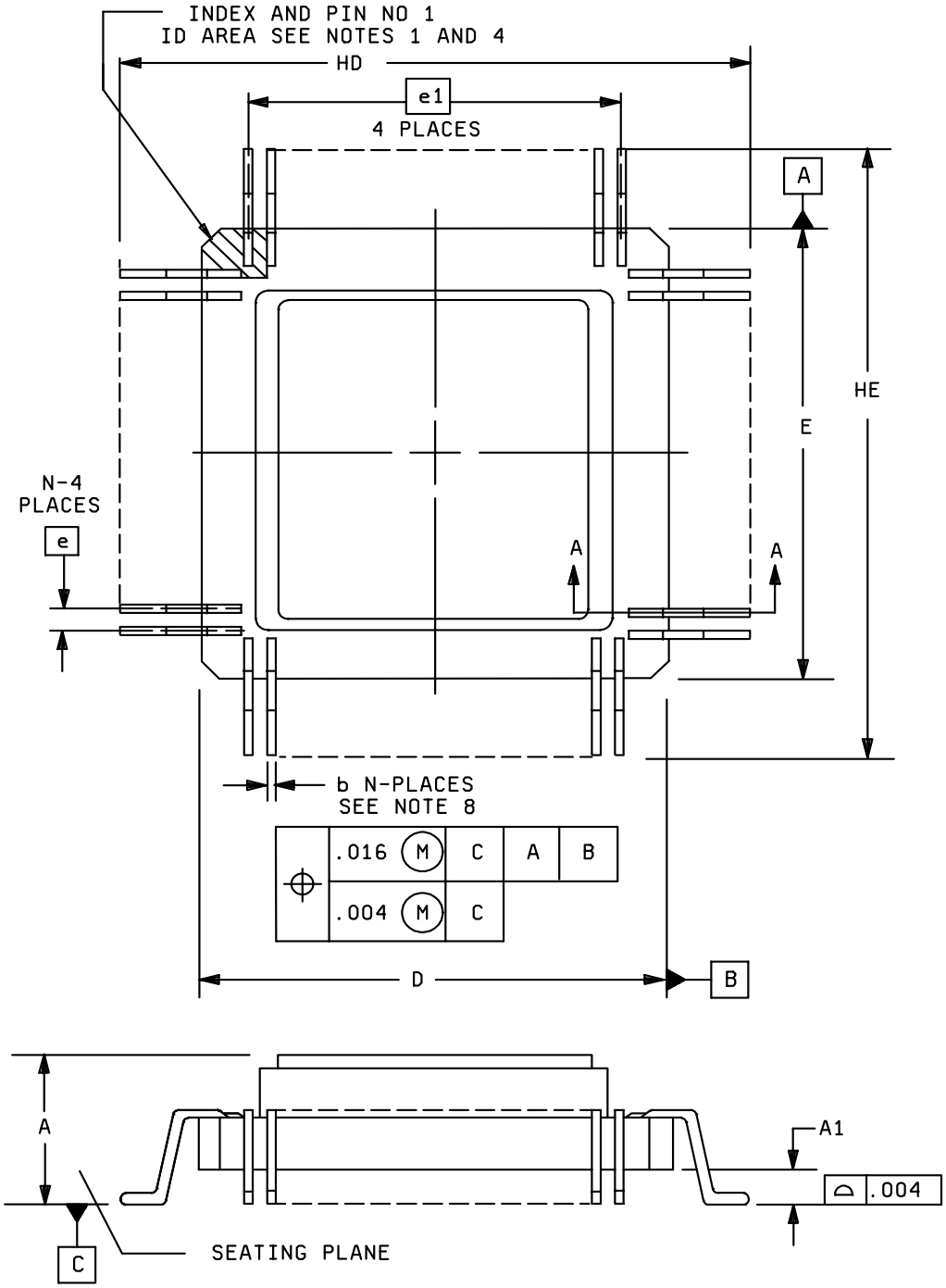

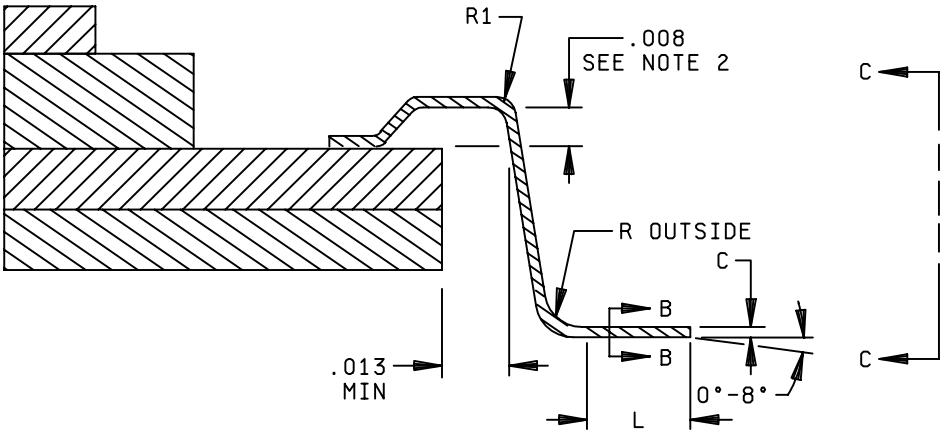

SECTION A-A

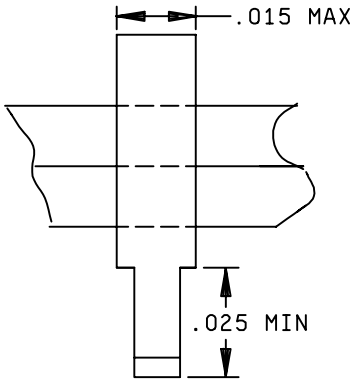

SECTION C-C

OPTIONAL LEAD SHOULDER WIDTH

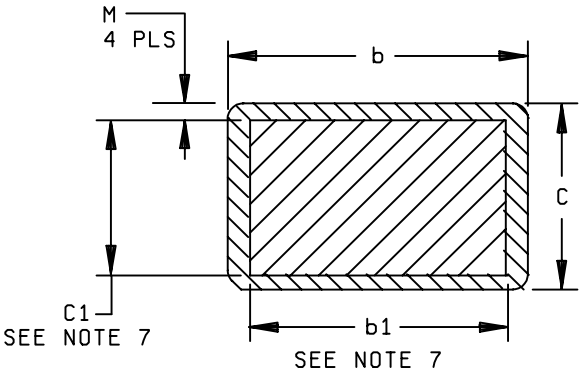

SECTION B-B

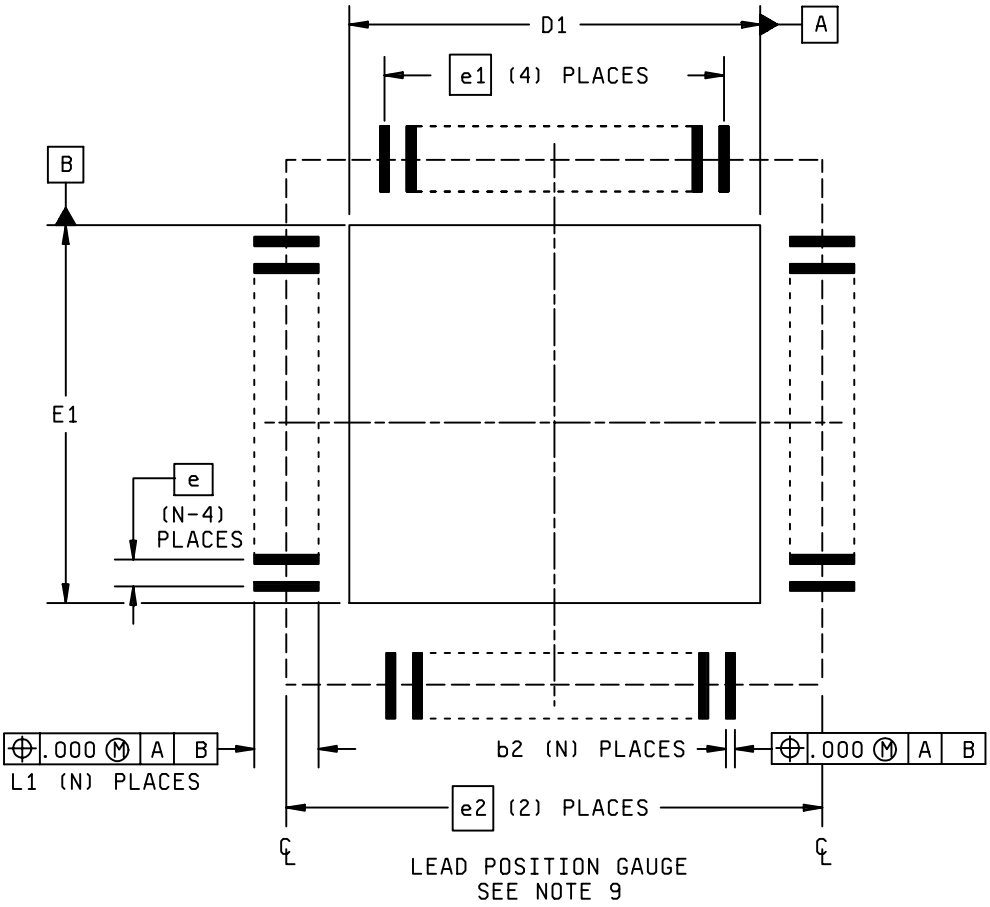
D1
A
e1 (4) PLACES
B
E1
e
(N-4)
PLACES
.000 M A B
L1 (N) PLACES
b2 (N) PLACES
.000 M A B
e2 (2) PLACES
LEAD POSITION GAUGE
SEE NOTE 9

Symbol	Variation							
	C-G7 (inches)				C-G7 (millimeters)			
	Min	Nom	Max	Note	Min	Nom	Max	Note
A	.060	---	.140		1.52	---	3.56	
A1	.022	.030	.038		0.56	0.76	0.97	
b	.006	---	.015	7	0.15	---	0.38	7
b1	.006	---	.013	7	0.15	---	0.33	7
b2	---	---	.019		---	---	0.48	
c	.004	---	.010	7	0.10	---	0.25	7
c1	.004	---	.008	7	0.10	---	0.20	7
D/E	.935	.950	.960		23.75	24.13	24.38	
D1/E1	---	---	.970		---	---	24.64	
e	.025 BSC				0.64 BSC			
e1	.800 BSC				20.32 BSC			
e2	1.080 BSC				27.43 BSC			
HD/HE	1.074	1.080	1.086		27.28	27.43	27.58	
L	.022	.025	.028		0.56	0.64	0.71	
L1	---	---	.006		---	---	0.15	
M	---	---	.001		---	---	0.03	
N	132			4	132			4
ND/NE	33			5	33			5
R	.011	---	.017		0.28	---	0.43	
R1	.010	---	---		0.25	---	---	
Notes	8, 10							

NOTES:

1. A terminal 1 identification mark shall be located at the index corner in the shaded area shown. Terminal 1 is located immediately adjacent to and counterclockwise from the index corner. Terminal numbers increase in a counterclockwise direction when viewed as shown.
2. Generic lead attach dogleg depiction. May be flat lead configuration.
3. Corner shapes (square, notch, radius, etc.) may vary from that shown on the drawing. The index corner shall be clearly unique.
4. Dimension N: Number of terminals.
5. Dimension ND/NE: Number of terminals per package edge.
6. No overhang of the lead on the braze pad is allowed.
7. Dimension b and c include lead finish; dimensions b1 and c1 apply to base metal only. Dimension M applies to plating thickness.
8. The leads of this package style shall be protected from mechanical distortion and damage such that dimensions pertaining to relative lead/body "true positions" and lead "coplanarity" are always maintained until the next higher level package attachment process is complete. Package lead protection mechanisms (tie bars, carriers, etc.) are not shown on the drawing, however when electronic devices contained in this package style are shipped for use in Government equipment, or shipped directly to the Government as spare parts or mechanical qualification samples, lead "true position" and "coplanarity" protection shall be in place.
9. The lead tip location may be determined with the use of the lead position gauge shown. Each lead tip and the body shall simultaneously reside within defined areas of the gauge.
10. The quad leaded chip carrier drawings in this outline requirement show a "gullwing" lead configuration. An optional configuration can be specified; it is for unformed (straight) leads, see figure 1 and table V concerning how to designate this option. When either option is selected and straight leads are subsequently formed by the electronic device user, the resultant lead configuration shall conform to the "gullwing" lead dimensions and coplanarity requirements specified herein.
11. See table VI for descriptive type designator.

This page intentionally blank

REQUIREMENT 108A

CERAMIC, GLASS-SEALED, "J" LEAD, CHIP CARRIER STYLE

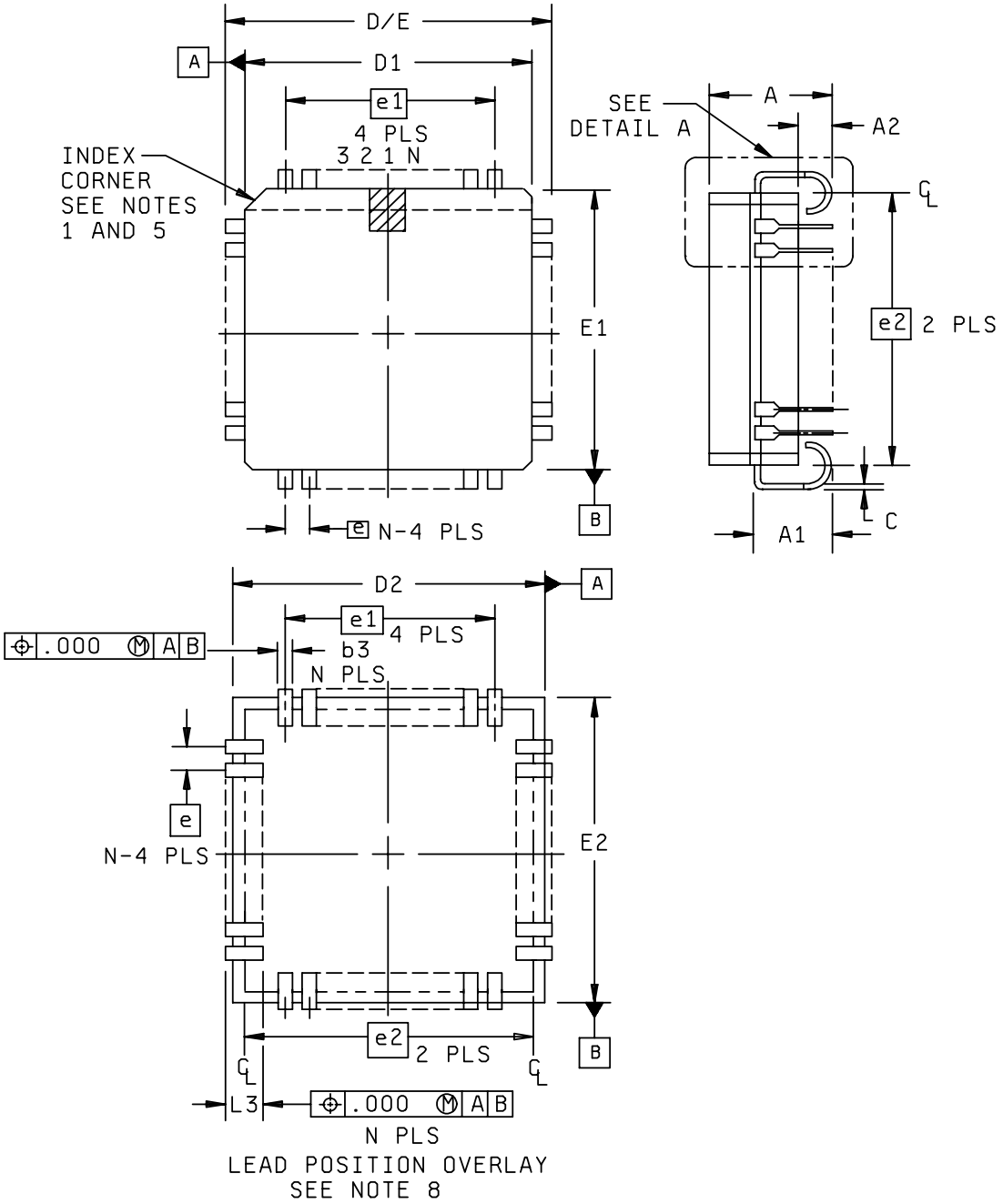

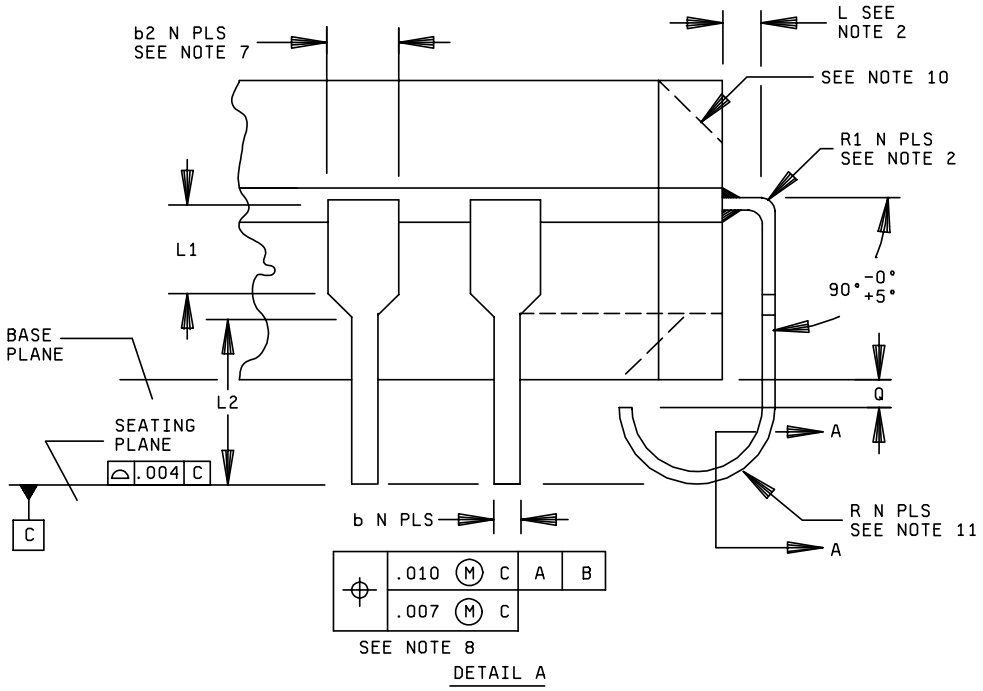
b2 N PLS
SEE NOTE 7
L SEE
NOTE 2
SEE NOTE 10
R1 N PLS
SEE NOTE 2
L1
90° -0° +5°
BASE
PLANE
L2
Q
SEATING
PLANE
.004 C
A
C
b N PLS
R N PLS
SEE NOTE 11
A
.010 M C A B
.007 M C
SEE NOTE 8
DETAIL A

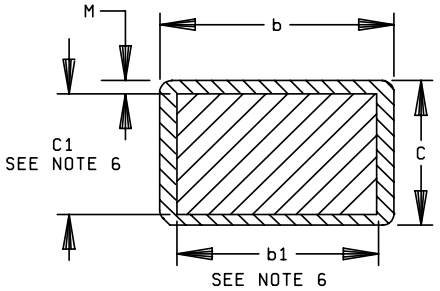
M
b
C1
SEE NOTE 6
C
b1
SEE NOTE 6

SECTION A-A

Symbol	Variations (all dimensions in inches)											
	C-J1				C-J2				C-J3			
	Min	Nom	Max	Note	Min	Nom	Max	Note	Min	Nom	Max	Note
A	.155	.172	.190		.155	.172	.190		.155	.172	.190	
A1	.090	.105	.120		.090	.105	.120		.090	.105	.120	
A2	.030	---	---		.030	---	---		.030	---	---	
b	.017	---	.023	6, 7	.017	---	.023	6, 7	.017	---	.023	6, 7
b1	.017	.019	.021	6, 7	.017	.019	.021	6, 7	.017	.019	.021	6, 7
b2	.026	.029	.032	6, 7	.026	.029	.032	6, 7	.026	.029	.032	6, 7
b3	---	---	.030	8	---	---	.030	8	---	---	.030	8
c	.006	---	.012	6, 7	.006	---	.012	6, 7	.006	---	.012	6, 7
c1	.006	---	.010	6, 7	.006	---	.010	6, 7	.006	---	.010	6, 7
D/E	.685	.690	.695		.985	.990	.995		1.185	1.190	1.195	
D1/E1	.630	.650	.656		.930	.950	.958		1.130	1.150	1.158	
D2/E2	---	---	.666		---	---	.968		---	---	1.168	
e	.050 BSC				.050 BSC				.050 BSC			
e1	.500 BSC				.800 BSC				1.00 BSC			
e2	.610 BSC				.910 BSC				1.11 BSC			
L	.010	---	---	2	.010	---	---	2	.010	---	---	2
L1	.030	---	---		.030	---	---		.030	---	---	
L2	.025	---	---		.025	---	---		.025	---	---	
L3	---	---	.022	8	---	---	.022	8	---	---	.022	2
M	---	---	.001		---	---	.001		---	---	.001	
N	44			3	68			3	84			3
ND/NE	11			4	17			4	21			4
Q	.003	---	---		.003	---	---		.003	---	---	
R	.025	---	.045	11	.025	---	.045	11	.025	---	.045	11
R1	.010	---	---		.010	---	---		.010	---	---	
Note	9, 12											

Symbol	Variations (all dimensions in millimeters)											
	C-J1				C-J2				C-J3			
	Min	Nom	Max	Note	Min	Nom	Max	Note	Min	Nom	Max	Note
A	3.93	4.36	4.82		3.93	4.36	4.82		3.93	4.36	4.82	
A1	2.28	2.66	3.04		2.28	2.66	3.04		2.28	2.66	3.04	
A2	0.76	---	---		0.76	---	---		0.76	---	---	
b	0.43	---	0.58	6, 7	0.43	---	0.58	6, 7	0.43	---	0.58	6, 7
b1	0.43	---	0.58	6, 7	0.43	0.48	0.53	6, 7	0.43	0.48	0.53	6, 7
b2	0.66	0.73	0.81	6, 7	0.66	0.73	0.81	6, 7	0.66	0.73	0.81	6, 7
b3	---	---	0.76	8	---	---	0.76	8	---	---	0.76	8
c	0.15	---	0.30	6, 7	0.15	---	0.30	6, 7	0.15	---	0.30	6, 7
c1	0.15	---	0.25	6, 7	0.15	---	0.25	6, 7	0.15	---	0.25	6, 7
D/E	17.39	17.52	17.65		25.01	25.14	25.27		30.09	30.23	30.35	
D1/E1	16.00	16.51	16.66		23.62	24.13	24.33		28.70	29.21	29.41	
D2/E2	---	---	16.91		---	---	24.58		---	---	29.66	
e	1.27 BSC				1.27 BSC				1.27 BSC			
e1	12.70 BSC				20.32 BSC				25.40 BSC			
e2	15.49 BSC				23.11 BSC				28.19 BSC			
L	0.25	---	---	2	0.25	---	---	2	0.25	---	---	2
L1	0.76	---	---		0.76	---	---		0.76	---	---	
L2	0.63	---	---		0.63	---	---		0.63	---	---	
L3	---	---	0.55	8	---	---	0.55	8	---	---	0.55	2
M	---	---	0.02		---	---	0.02		---	---	0.02	
N	44			3	68			3	84			3
ND/NE	11			4	17			4	21			4
Q	0.07	---	---		0.07	---	---		0.07	---	---	
R	0.63	---	1.14	11	0.63	---	1.14	11	0.63	---	1.14	11
R1	0.25	---	---		0.25	---	---		0.25	---	---	
Note	9, 12											

	Variations (all dimensions in inches)							
	C-J7				C-J8			
Symbol	Min	Nom	Max	Note	Min	Nom	Max	Note
A	.155	.172	.190		.155	.172	.190	
A1	.090	.105	.120		.090	.105	.120	
A2	.030	---	---		.030	---	---	
b	.017	---	.023	6, 7	.017	---	.023	6, 7
b1	.017	.019	.021	6, 7	.017	.019	.021	6, 7
b2	.026	.029	.032	6, 7	.026	.029	.032	6, 7
b3	---	---	.030	8	---	---	.030	8
c	.006	---	.012	6, 7	.006	---	.012	6, 7
c1	.006	---	.010	6, 7	.006	---	.010	6, 7
D/E	.485	.490	.495		.785	.790	.795	
D1/E1	.430	.450	.456		.730	.750	.756	
D2/E2	---	---	.466		---	---	.766	
e	.050 BSC				.050 BSC			
e1	.300 BSC				.600 BSC			
e2	.410 BSC				.710 BSC			
L	.010	---	---	2	.010	---	---	2
L1	.030	---	---		.030	---	---	
L2	.025	---	---		.025	---	---	
L3	---	---	.022	8	---	---	.022	8
M	---	---	.001		---	---	.001	
N	28			3	52			3
ND/NE	7			4	13			4
Q	.003	---	---		.003	---	---	
R	.025	---	.045	11	.025	---	.045	11
R1	.010	---	---		.010	---	---	
Note	9, 12							

Symbol	Variations (all dimensions in millimeters)							
	C-J7				C-J8			
	Min	Nom	Max	Note	Min	Nom	Max	Note
A	3.93	4.36	4.82		3.93	4.36	4.82	
A1	2.28	2.66	3.04		2.28	2.66	3.04	
A2	0.76	---	---		0.76	---	---	
b	0.43	---	0.58	6, 7	0.43	---	0.58	6, 7
b1	0.43	0.48	0.53	6, 7	0.43	0.48	0.53	6, 7
b2	0.66	0.73	0.81	6, 7	0.66	0.73	0.81	6, 7
b3	---	---	0.76	8	---	---	0.76	8
c	0.15	---	0.30	6, 7	0.15	---	0.30	6, 7
c1	0.15	---	0.25	6, 7	0.15	---	0.25	6, 7
D/E	12.31	12.44	12.57		19.93	20.06	20.19	
D1/E1	10.92	11.43	11.58		18.54	19.05	19.20	
D2/E2	---	---	11.83		---	---	19.45	
e	1.27 BSC				1.27 BSC			
e1	7.62 BSC				15.24 BSC			
e2	10.41 BSC				18.03 BSC			
L	0.25	---	---	2	0.25	---	---	2
L1	0.76	---	---		0.76	---	---	
L2	0.63	---	---		0.63	---	---	
L3	---	---	0.55	8	---	---	0.55	8
M	---	---	0.02		---	---	0.02	
N	28			3	52			3
ND/NE	7			4	13			4
Q	0.07	---	---		0.07	---	---	
R	0.63	---	1.14	11	0.63	---	1.14	11
R1	0.25	---	---		0.25	---	---	
Note	9, 12							

NOTES:

1. A terminal 1 identification mark shall be located on the first side clockwise from the index corner, within the shaded area shown. Terminal numbers shall increase in a counterclockwise direction when viewed as shown. If the identification mark is not exactly adjacent to terminal 1, terminal 1 is located as follows:
   a. If the number of terminals on a side is odd, terminal 1 is the center terminal.
   b. If the number of terminals on a side is even, terminal 1 is the terminal which is adjacent to the centerline of the terminal array in the direction closest to the index corner.
2. This dimension delineates the minimum clearance between the inside of the lead and the top of the body. One-half of the minimum clearance from the body establishes a limit beyond which package edge anomalies caused by material protrusion such as rough ceramic, misaligned ceramic layers, glass meniscus, or overrun shall not extend.
3. Symbol N: Number of terminals.
4. Symbols ND/NE: Number of terminals per package edge.
5. Corner shape (square, notch, radius, etc.) may vary from that shown on the drawing. The index corner shall be clearly unique.
6. Dimensions b1 and c1 apply to base metal only. Dimension M applies to plating thickness.
7. The leads on this package style shall be protected from mechanical distortion and damage such that dimensions pertaining to relative lead/body "true positions" and lead "coplanarity" are always maintained until the next higher level package attachment process is complete. Package lead protection mechanisms (tie bars, carriers, etc.) are not shown on the drawing; however, when electronic devices contained in this package style are shipped for use in Government equipment, or shipped directly to the Government as spare parts or mechanical qualification samples, lead protection shall be in place.
8. The location of each lead seating plane "interface area" may be determined with the use of the lead position gauge shown. The interface area of each lead and the body shall simultaneously reside within defined areas of the gauge.
9. UV window is optional. See table VI for descriptive type designator
10. Body contour along dotted lines optional.
11. The minimum arc length "AL" of radius R shall be "AL = 135 π R/180".
12. The quad leaded chip carrier drawings in this outline requirement show a "J" lead configuration. An optional configuration can be specified; it is for unformed (straight) leads, see figure 1 and table V concerning how to designate this option. When either option is selected and straight leads are subsequently formed by the electronic device user, the resultant lead configuration shall conform to the "J" lead dimensions and coplanarity requirements specified herein.

This page intentionally blank

REQUIREMENT 109A

CERAMIC, METAL-SEALED, "J" LEAD CHIP CARRIER STYLE

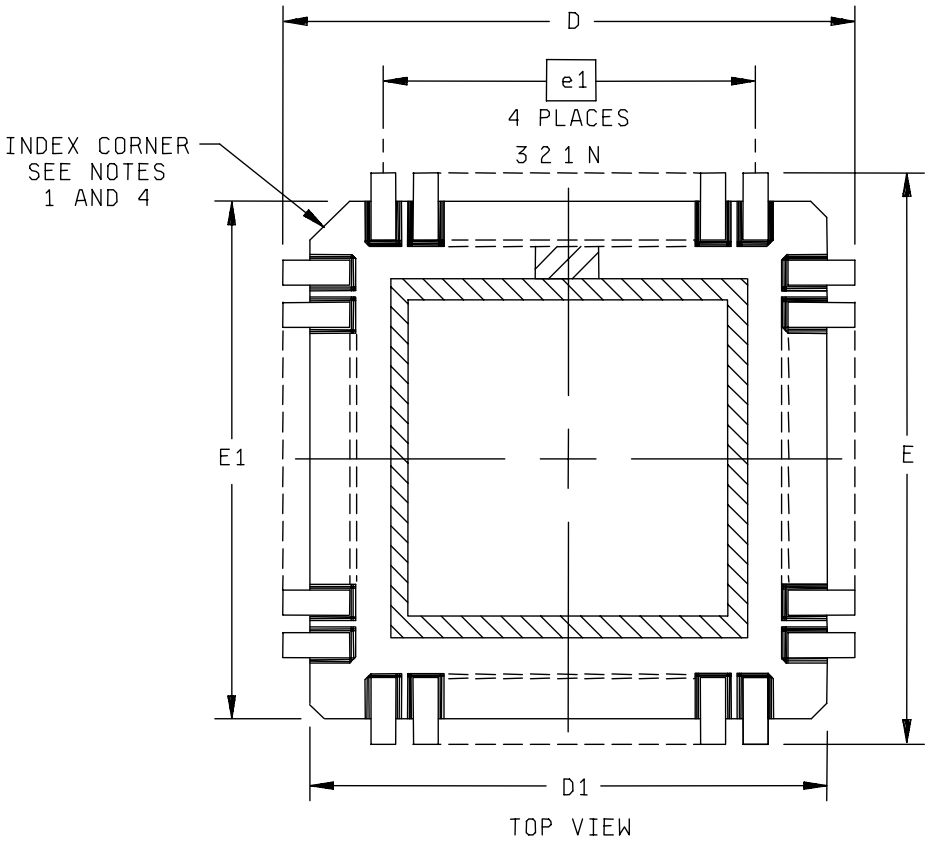

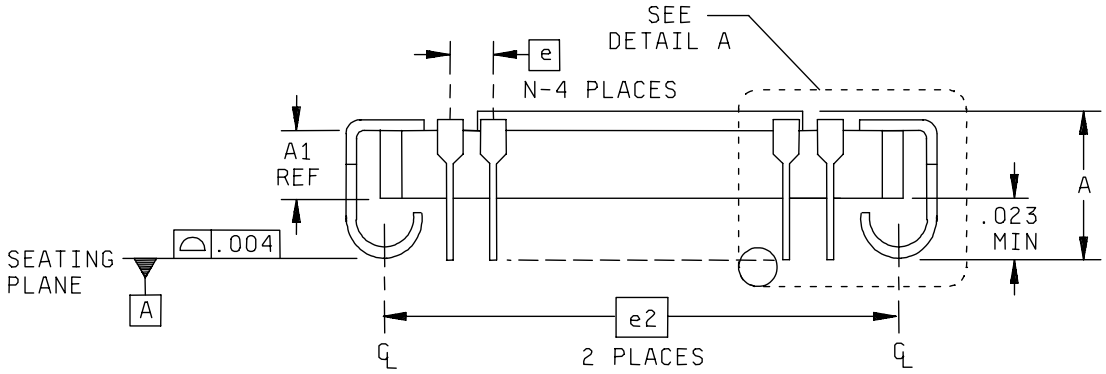

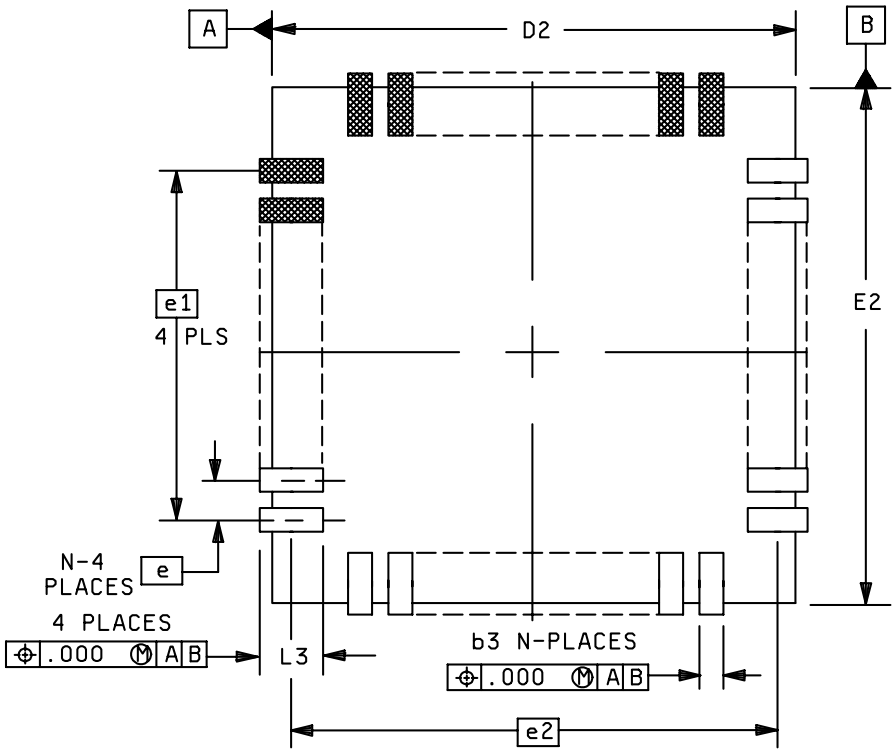
A
D2
B
e1
4 PLS
E2
N-4
PLACES
e
4 PLACES
.000 M A B
L3
b3 N-PLACES
.000 M A B
e2
2 PLACES
LEAD POSITION GAUGE
SEE NOTE 7

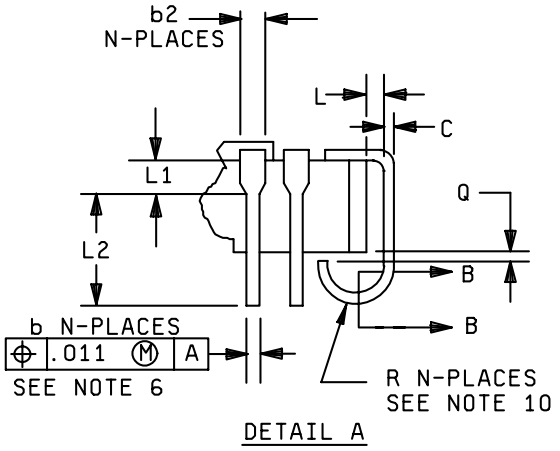
b2
N-PLACES
L
C
L1
Q
L2
B
B
b N-PLACES
.011 M A
SEE NOTE 6
R N-PLACES
SEE NOTE 10
DETAIL A

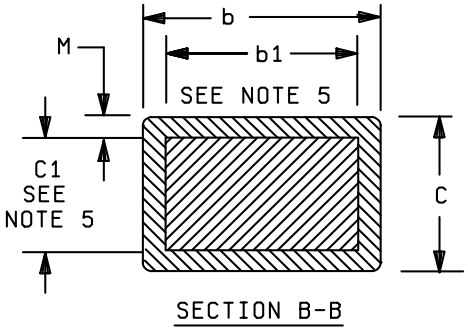
b
M
b1
SEE NOTE 5
C1
SEE
NOTE 5
C
SECTION B-B

Symbol	Variations (all dimensions in inches)											
	C-J4				C-J5				C-J6			
	Min	Nom	Max	Note	Min	Nom	Max	Note	Min	Nom	Max	Note
A	.115	.125	.190	8	.115	.125	.190	8	.115	.160	.190	8
A1	---	.065	---		---	.080	---		---	.080	---	
b	.013	---	.023		.013	---	.023		.013	---	.023	
b1	.013	---	.020	5	.013	---	.020	5	.013	---	.020	5
b2	.022	---	.035		.022	---	.035		.022	---	.035	
b3	---	---	.034	7	---	---	.034	7	---	---	.034	7
c	.007	---	.013		.007	---	.013		.007	---	.013	
c1	.007	---	.010	5	.007	---	.010	5	.007	---	.010	5
D/E	.675	.690	.700		.975	.990	1.000		1.175	1.190	1.200	
D1/E1	.620	---	.660		.920	---	.960		1.120	---	1.165	
D2/E2	---	---	---	11	---	---	---	11	---	---	---	11
e	.050 BSC				.050 BSC				.050 BSC			
e1	.500 BSC				.800 BSC				1.000 BSC			
e2	.630 BSC				.930 BSC				1.140 BSC			
L	.005	---	---		.005	---	---		.005	---	---	
L1	.020	---	---		.020	---	---		.020	---	---	
L2	.025	---	---		.025	---	---		.025	---	---	
L3	---	---	.040	7	---	---	.040	7	---	---	.040	7
M	---	---	.0015	5	---	---	.0015	5	---	---	.0015	5
N		44		2		68		2		84		2
ND/NE		11		3		17		3		21		3
Q	.003	---	---		.003	---	---		.003	---	---	
R	.020	---	.040		.020	---	.040		.020	---	.040	
Note	9											

Symbol	Variations (all dimensions in millimeters)											
	C-J4				C-J5				C-J6			
	Min	Nom	Max	Note	Min	Nom	Max	Note	Min	Nom	Max	Note
A	2.95	3.17	4.82	8	2.95	3.17	4.82	8	2.95	3.17	4.82	8
A1	---	1.65	---		---	2.03	---		---	2.03	---	
b	0.33	---	0.58		0.33	---	0.58		0.33	---	0.58	
b1	0.33	---	0.50	5	0.33	---	0.50	5	0.33	---	0.50	5
b2	0.55	---	0.88		0.55	---	0.88		0.55	---	0.88	
b3	---	---	0.86	7	---	---	0.86	7	---	---	0.86	7
c	0.17	---	0.33		0.17	---	0.33		0.17	---	0.33	
c1	0.17	---	0.25	5	0.17	---	0.25	5	0.17	---	0.25	5
D/E	17.14	17.52	17.78		24.76	25.14	25.40		29.84	30.22	30.48	
D1/E1	15.74	---	16.76		.920	---	.960		28.44	---	29.59	
D2/E2	---	---	---	11	---	---	---	11	---	---	---	11
e	1.27 BSC				1.27 BSC				1.27 BSC			
e1	12.70 BSC				20.32 BSC				25.40 BSC			
e2	16.00 BSC				23.62 BSC				28.95 BSC			
L	0.12	---	---		0.12	---	---		0.12	---	---	
L1	0.50	---	---		0.50	---	---		0.50	---	---	
L2	0.63	---	---		0.63	---	---		0.63	---	---	
L3	---	---	1.01	7	---	---	1.01	7	---	---	1.01	7
M	---	---	0.038	5	---	---	0.038	5	---	---	0.038	5
N		44		2		68		2		84		2
ND/NE		11		3		17		3		21		3
Q	0.07	---	---		0.07	---	---		0.07	---	---	
R	0.50	---	1.01		0.50	---	1.01		0.50	---	1.01	
Note	9											

Symbol	Variations (all dimensions in inches)							
	C-J9				C-J10			
	Min	Nom	Max	Note	Min	Nom	Max	Note
A	.115	.125	.190	8	.115	.125	.190	8
A1	---	.060	---		---	.065	---	
B	.013	---	.023		.013	---	.023	
b1	.013	---	.020	5	.013	---	.020	5
b2	.022	---	.035		.022	---	.035	
b3	---	---	.034	7	---	---	.034	7
c	.007	---	.013		.007	---	.013	
c1	.007	---	.010	5	.007	---	.010	5
D/E	.475	.490	.500		.775	.790	.800	
D1/E1	.420	---	.460		.720	---	.760	
D2/E2	---	---	---	11	---	---	---	11
e	.050 BSC				.050 BSC			
e1	.300 BSC				.600 BSC			
e2	.430 BSC				.730 BSC			
L	.005	---	---		.005	---	---	
L1	.020	---	---		.020	---	---	
L2	.025	---	---		.025	---	---	
L3	---	---	.040	7	---	---	.040	7
M	---	---	.0015	5	---	---	.0015	5
N		28		2		52		2
ND/NE		7		3		13		3
Q	.003	---	---		.003	---	---	
R	.020	---	.040		.020	---	.040	
Note	9							

	Variations (all dimensions in millimeters)							
	C-J9				C-J10			
Symbol	Min	Nom	Max	Note	Min	Nom	Max	Note
A	2.95	3.17	4.82	8	2.95	3.17	4.82	8
A1	---	1.52	---		---	1.65	---	
b	0.33	---	0.58		0.33	---	0.50	
b1	.033	---	.050	5	.055	---	.088	5
b2	.055	---	.088		.055	---	.088	
b3	---	---	.086	7	---	---	.086	7
c	.017	---	.033		.017	---	.033	
c1	.017	---	.025	5	.017	---	.025	5
D/E	12.06	12.44	12.70		12.06	20.06	20.37	
D1/E1	10.66	---	11.68		18.28	---	19.30	
D2/E2	---	---	---	11	---	---	---	11
e	1.27 BSC				1.27 BSC			
e1	7.62 BSC				15.24 BSC			
e2	10.92 BSC				18.54 BSC			
L	0.12	---	---		0.12	---	---	
L1	0.50	---	---		0.50	---	---	
L2	0.63	---	---		0.63	---	---	
L3	---	---	1.01	7	---	---	1.01	7
M	---	---	0.038	5	---	---	0.038	5
N		28		2		52		2
ND/NE		7		3		13		3
Q	0.07	---	---		0.07	---	---	
R	0.50	---	10.16		0.50	---	10.16	
Note	9							

NOTES:

1. A terminal 1 identification mark shall be located on the first side clockwise from the index corner, within the shaded area shown. Terminal numbers shall increase in a counterclockwise direction when viewed as shown. If the identification mark is not exactly adjacent to terminal 1, terminal 1 is located as follows:
   a. If the number of terminals on a side is odd, terminal 1 is the center terminal.
   b. If the number of terminals on a side is even, terminal 1 is the terminal which is adjacent to the centerline of the terminal array in the direction closest to the index corner.
2. Symbol N: Number of terminals.
3. Symbols ND/NE: Number of terminals per package edge. ND/NE = N / 4
4. Corner shapes (square, notch, radius, etc.) may vary from that shown on the drawing. The index corner shall be clearly unique.
5. Dimensions b1 and c1 apply to base metal only. Dimension M applies to plating thickness.
6. The leads on this package style shall be protected from mechanical distortion and damage such that dimensions pertaining to relative lead/body "true positions" and lead "coplanarity" are always maintained until the next higher level package attachment process is complete. Package lead protection mechanisms (tie bars, carriers, etc.) are not shown on the drawing, however when electronic devices contained in this package style are shipped for use in Government equipment, or shipped directly to the Government as spare parts or mechanical qualification samples, lead protection shall be in place.
7. The location of each lead seating plane "interface area" may be determined with the use of the lead position gauge shown. The interface area of each lead and the body shall simultaneously reside within defined areas of the gauge.
8. The maximum "A" dimension allows for an EPROM window lid.
9. The quad leaded chip carrier drawings in this outline requirement show a "J" lead configuration. An optional configuration can be specified; it is for unformed (straight) leads, see figure 1 and table V concerning how to designate this option. When either option is selected and straight leads are subsequently formed by the electronic device user, the resultant lead configuration shall conform to the "J" lead dimensions and coplanarity requirements specified herein.
10. See table VI for descriptive type designator.
11. D2/E2 = D1/E1 max +.004 inch (0.10 mm).

This page intentionally blank

REQUIREMENT 110

CERAMIC, METAL-SEALED, UNFORMED-LEAD, CHIP CARRIER STYLE

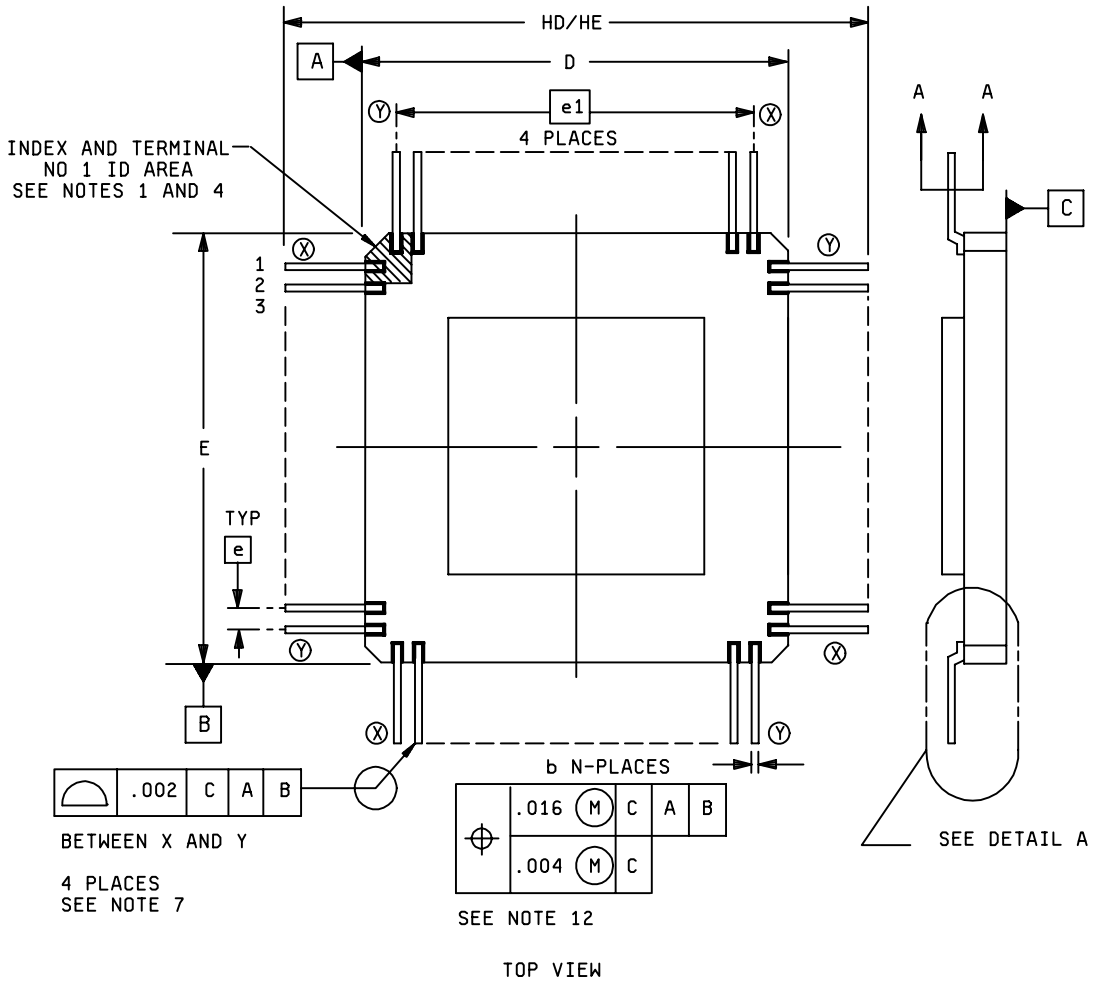

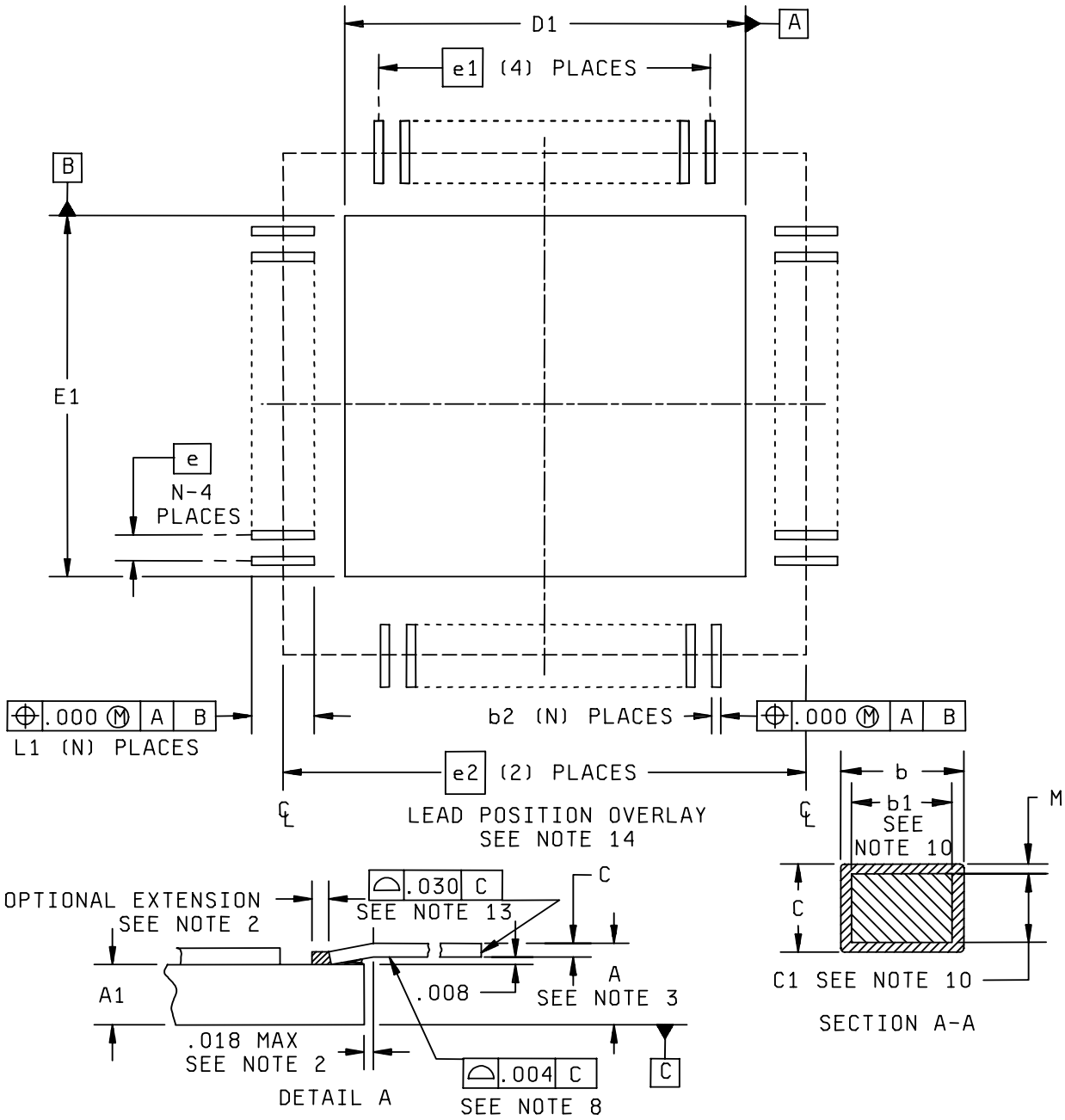
D1
A
e1 (4) PLACES
B
E1
e
N-4
PLACES
.000 M A B
L1 (N) PLACES
b2 (N) PLACES
.000 M A B
e2 (2) PLACES
LEAD POSITION OVERLAY
SEE NOTE 14
b
b1
SEE
NOTE 10
M
C
C1 SEE NOTE 10
SECTION A-A
OPTIONAL EXTENSION
SEE NOTE 2
.030 C
SEE NOTE 13
C
A
SEE NOTE 3
A1
.008
.018 MAX
SEE NOTE 2
DETAIL A
.004 C
SEE NOTE 8
C

	Variations (all dimensions in inches)											
	C-U1				C-U2				C-U3			
Symbol	Min	Nom	Max	Note	Min	Nom	Max	Note	Min	Nom	Max	Note
A	.060	---	.130	3	.060	---	.135	3	.060	---	.130	3
A1	---	---	.105		---	---	.120		---	---	.105	
b	.006	---	.014	10	.008	---	.015	10	.006	---	.015	10
b1	.006	.008	.012	10	.006	.010	.013	10	.006	.008	.013	10
b2	---	---	.016	10	---	---	.019	10	---	---	.019	10
c	.004	---	.010	10	.005	---	.011	10	.004	---	.010	10
c1	.004	.006	.008	10	.005	.007	.009	10	.004	.006	.008	10
D/E	.635	.650	.665		.735	.750	.765		.935	.950	.965	
D1/E1	---	---	.675	12	---	---	.775	12	---	---	.975	12
e	.025 BSC				.025 BSC				.025 BSC			
e1	.500 BSC				.660 BSC				.800 BSC			
e2	1.440 BSC			12	1.440 BSC			12	1.500 BSC			12
HD/HE	1.420	1.450	1.465	12	1.420	1.450	1.465	12	1.480	1.510	1.525	12
L1	---	---	.023	12	---	---	.023	12	---	---	.023	12
M	---	---	.002	10	---	---	.002	10	---	---	.002	10
N		84		5		100		5		132		5
ND/NE		21		6		25		6		33		6
Note	14											

	Variations (all dimensions in millimeters)											
	C-U1				C-U2				C-U3			
Symbol	Min	Nom	Max	Note	Min	Nom	Max	Note	Min	Nom	Max	Note
A	1.52	---	3.30	3	1.52	---	3.42	3	1.52	---	3.30	3
A1	---	---	2.66		---	---	3.04		---	---	2.66	
b	0.15	---	0.35	10	0.20	---	0.38	10	0.15	---	0.38	10
b1	0.15	0.20	0.30	10	0.15	0.25	0.33	10	0.15	0.20	0.30	10
b2	---	---	0.40	10	---	---	0.48	10	---	---	0.48	10
c	0.10	---	0.25	10	0.12	---	0.27	10	0.10	---	0.25	10
c1	0.10	0.15	0.20	10	0.12	0.17	0.22	10	0.10	0.15	0.20	10
D/E	16.12	16.51	16.89		18.66	19.05	19.43		23.74	24.13	24.51	
D1/E1	---	---	17.14	12	---	---	19.68	12	---	---	24.76	12
e	0.63 BSC				0.63 BSC				0.63 BSC			
e1	12.70 BSC				15.24 BSC				20.32 BSC			
e2	13.57 BSC			12	36.57 BSC			12	1.500 BSC			
HD/HE	36.06	36.83	37.21	12	36.06	36.83	37.21	12	37.59	38.35	38.73	12
L1	---	---	0.58	12	---	---	0.58	12	---	---	0.58	12
M	---	---	0.05	10	---	---	0.05	10	---	---	0.05	10
N		84		5		100		5		132		5
ND/NE		21		6		25		6		33		6
Note	14											

Symbol	Variations (all dimensions in inches)											
	C-U4				C-U5				C-U6			
	Min	Nom	Max	Note	Min	Nom	Max	Note	Min	Nom	Max	Note
A	.060	---	.130	3	.060	---	.130	3	.060	---	.130	3
A1	---	---	.105		---	---	.105		---	---	.105	
b	.006	---	.012	10	.006	---	.012	10	.006	---	.012	10
b1	.006	.008	.010	10	.006	.008	.010	10	.006	.008	.010	10
b2	---	---	.017	10	---	---	.017	10	---	---	.017	10
c	.004	---	.010	10	.004	---	.010	10	.004	---	.010	10
c1	.004	.006	.008	10	.004	.006	.008	10	.004	.006	.008	10
D/E	1.035	1.050	1.065		1.135	1.150	1.165		1.335	1.350	1.365	
D1/E1	---	---	1.075	12	---	---	1.175	12	---	---	1.375	12
e	.025 BSC				.025 BSC				.025 BSC			
e1	.875 BSC				1.050 BSC				1.200 BSC			
e2	1.590 BSC			12	1.800 BSC			12	1.890 BSC			12
HD/HE	1.570	1.600	1.615	12	1.780	1.810	1.825	12	1.870	1.900	1.915	12
L1	---	---	.023	12	---	---	.023	12	---	---	.023	12
M	---	---	.002	10	---	---	.002	10	---	---	.002	10
N		144		5		172		5		196		5
ND/NE		36		6		43		6		49		6
Note	14											

Symbol	Variations (all dimensions in millimeters)											
	C-U4				C-U5				C-U6			
	Min	Nom	Max	Note	Min	Nom	Max	Note	Min	Nom	Max	Note
A	1.52	---	3.30	3	1.52	---	3.30	3	1.52	---	3.30	3
A1	---	---	2.66		---	---	2.66		---	---	2.66	
b	0.15	---	0.30	10	0.15	---	0.30	10	0.15	---	0.30	10
b1	0.15	0.20	0.35	10	0.15	0.20	0.35	10	0.15	0.20	0.35	10
b2	---	---	0.43	10	---	---	0.43	10	---	---	0.43	10
c	0.10	---	0.25	10	0.10	---	0.25	10	0.10	---	0.25	10
c1	0.10	0.15	0.20	10	0.10	0.15	0.20	10	0.10	0.15	0.20	10
D/E	26.28	26.67	27.05		28.82	29.21	29.59		33.90	34.29	34.67	
D1/E1	---	---	27.30	12	---	---	29.84	12	---	---	34.92	12
e	0.63 BSC				0.63 BSC				0.63 BSC			
e1	22.22 BSC				26.67 BSC				30.48 BSC			
e2	40.38 BSC			12	45.72 BSC			12	48.00 BSC			12
HD/HE	39.87	40.64	41.02	12	45.21	45.97	46.35	12	47.49	48.26	48.64	12
L1	---	---	0.58	12	---	---	0.58	12	---	---	0.58	12
M	---	---	0.05	10	---	---	0.05	10	---	---	0.05	10
N		144		5		172		5		196		5
ND/NE		36		6		43		6		49		6
Note	14											

NOTES:

1. A terminal 1 identification mark shall be located at the index corner in the shaded area shown. Terminal 1 is located immediately adjacent to and counterclockwise from the index corner. Terminal numbers increase in a counterclockwise direction when viewed as shown.
2. Generic lead attach dogleg depiction. May be flat lead configuration.
3. Includes lead attach dogleg height and lid height, whichever is greater.
4. Corner shapes (square, notch, radius, etc.) may vary from that shown on the drawing. The index corner shall be clearly unique.
5. Dimension N: Number of terminals.
6. Dimension ND/NE: Number of terminals per package edge.
7. Regardless of the virtual length, the .002 limit ensures an accurate square trim for subsequent lead forming tool registration.
8. Lead coplanarity shall be .004 inch (0.10 mm) within .050 inch (1.27 mm) from package body.
9. No overhang of the lead on the braze pad is allowed.
10. Dimensions b1 and c1 apply to base metal only. Dimension M applies to plating thickness.
11. The leads on this package style shall be protected from mechanical distortion and damage such that dimensions pertaining to relative lead/body "true positions" and lead "coplanarity" are always maintained until the next higher level package attachment process is complete. Package lead protection mechanisms (tie bars, carriers, etc.) are not shown on the drawing, however when electronic devices contained in this package style are shipped for use in Government equipment, or shipped directly to the Government as spare parts or mechanical qualification samples, lead "true position" and "coplanarity" protection shall be in place.
12. The lead tip location may be determined with the use of the lead position gauge shown. Each lead tip and the body shall simultaneously reside within defined areas of the gauge.
13. Lead tip coplanarity shall be .030 inch (0.76 mm) at minimum lead length.
14. See table VI for descriptive type designator.
15. The lead tip-to-tip profile is specified by this feature control frame.

This page intentionally blank

REQUIREMENT 111

CERAMIC, PIN GRID ARRAY STYLE

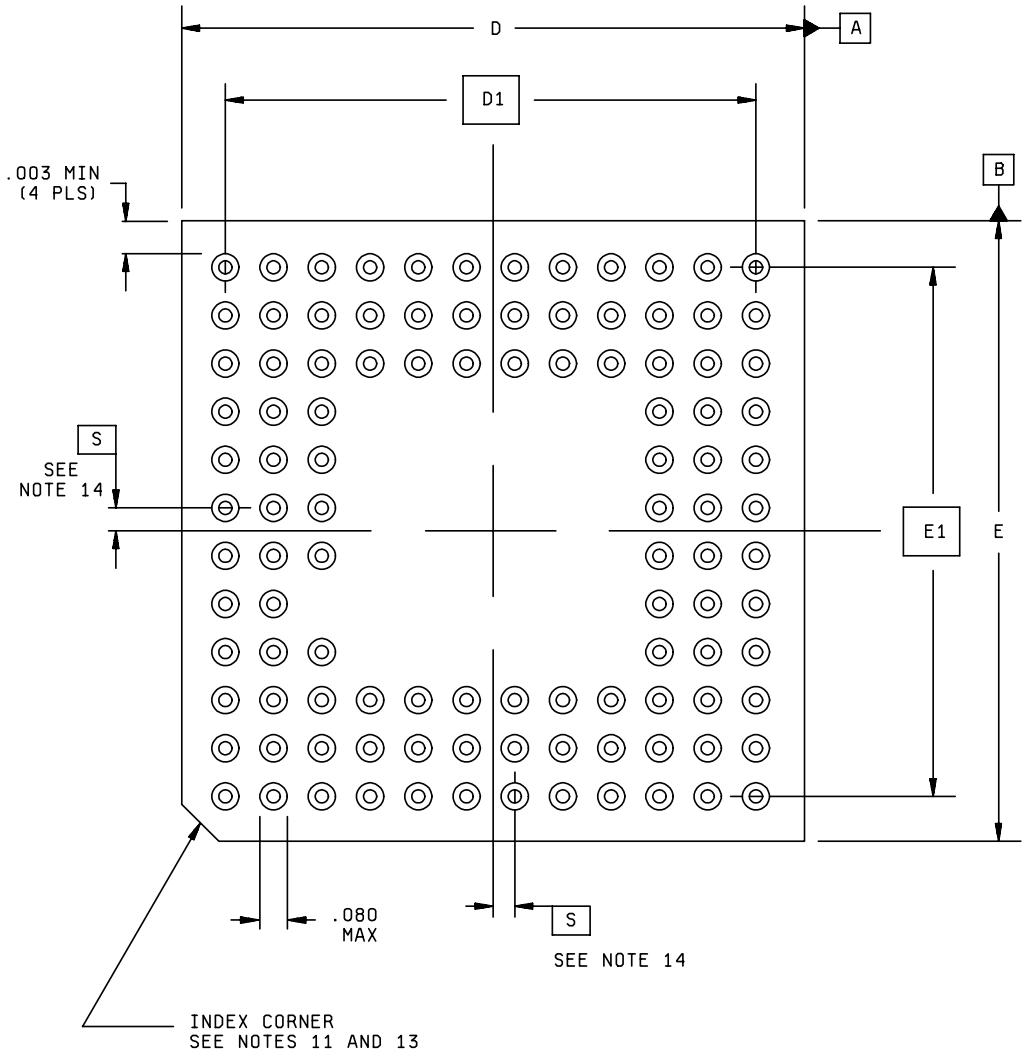

Inches	mm	Inches	mm	Inches	mm	Inches	mm	Inches	mm
.003	0.08	.016	0.41	.030	0.76	.070	1.78	.120	3.05
.007	0.18	.020	0.51	.040	1.02	.080	2.03	.140	3.56
.010	0.25	.025	0.64	.060	1.52	.100	2.54	.145	3.68

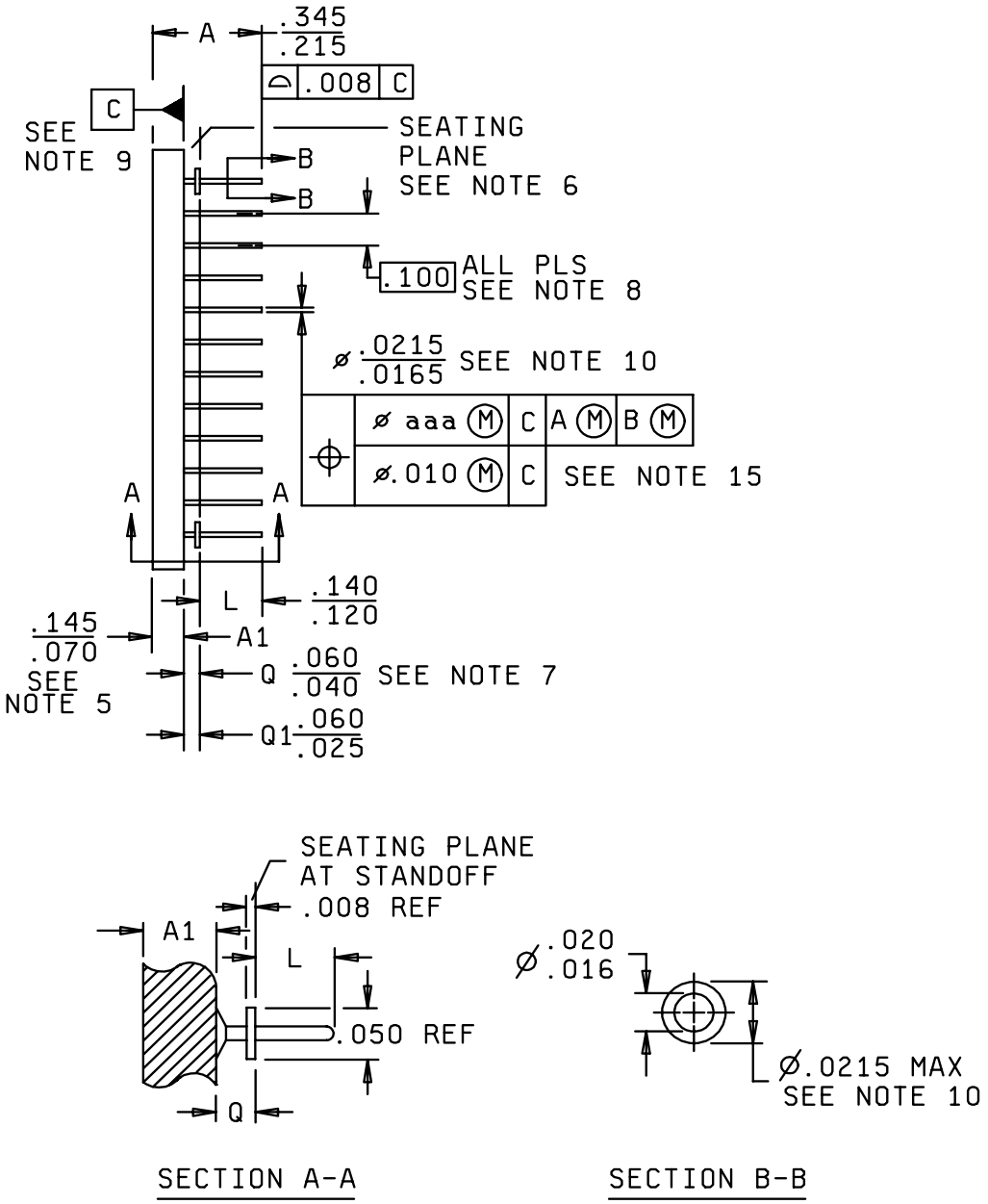
A
.345
.215
.008 C
C
SEE
NOTE 9
SEATING
PLANE
SEE NOTE 6
B
B
.100
ALL PLS
SEE NOTE 8
ø .0215
.0165
SEE NOTE 10
ø aaa M C A M B M
ø.010 M C
SEE NOTE 15
A
A
L
.140
.120
.145
.070
SEE
NOTE 5
A1
Q .060
.040
SEE NOTE 7
Q1 .060
.025
SEATING PLANE
AT STANDOFF
.008 REF
A1
L
.050 REF
Q
SECTION A-A
Ø .020
.016
Ø.0215 MAX
SEE NOTE 10
SECTION B-B

	"Large outline" variations (all dimensions shown in inches)											
	P-AA			P-AB			P-AC			P-AD		
Symbol	Min	Max	Note	Min	Max	Note	Min	Max	Note	Min	Max	Note
D/E	.940	.980		1.040	1.080		1.140	1.180		1.240	1.280	
D1/E1	.800 BSC			.900 BSC			1.000 BSC			1.100 BSC		
aaa	---	.030		---	.030		---	.030		---	.030	
M	9		3	10		3	11		3	12		3
N	---	81	4	---	100	4	---	121	4	---	144	4
S	.000 BSC			.050 BSC			.000 BSC			.050 BSC		
Notes	1, 2, 12, 16											

	"Large outline" variations (all dimensions shown in inches)											
	P-AE			P-AF			P-AG			P-AH		
Symbol	Min	Max	Note	Min	Max	Note	Min	Max	Note	Min	Max	Note
D/E	1.340	1.380		1.440	1.480		1.540	1.590		1.640	1.680	
D1/E1	1.200 BSC			1.300 BSC			1.400 BSC			1.500 BSC		
aaa	---	.030		---	.030		---	.030		---	.030	
M	13		3	14		3	15		3	16		3
N	---	169	4	---	196	4	---	225	4	---	256	4
S	.000 BSC			.050 BSC			.000 BSC			.050 BSC		
Notes	1, 2, 12, 16											

	"Large outline" variations (all dimensions shown in inches)											
	P-AJ			P-AK			P-AL			P-AM		
Symbol	Min	Max	Note	Min	Max	Note	Min	Max	Note	Min	Max	Note
D/E	1.732	1.780		1.840	1.880		1.940	1.980		2.040	2.080	
D1/E1	1.600 BSC			1.700 BSC			1.800 BSC			1.900 BSC		
aaa	---	.030		---	.030		---	.030		---	.030	
M	17		3	18		3	19		3	20		3
N	---	289	4	---	324	4	---	361	4	---	400	4
S	.000 BSC			.050 BSC			.000 BSC			.050 BSC		
Notes	1, 2, 12, 16											

	"Large outline" variations (all dimensions shown in millimeters)											
	P-AA			P-AB			P-AC			P-AD		
Symbol	Min	Max	Note	Min	Max	Note	Min	Max	Note	Min	Max	Note
D/E	23.88	24.89		26.42	27.43		28.96	29.97		31.50	32.51	
D1/E1	20.32 BSC			22.86 BSC			25.40 BSC			27.94 BSC		
aaa	---	0.76		---	0.76		---	0.76		---	0.76	
M	9		3	10		3	11		3	12		3
N	---	81	4	---	100	4	---	121	4	---	144	4
S	.00 BSC			1.27 BSC			.00 BSC			1.27 BSC		
Notes	1, 2, 12, 16											

	"Large outline" variations (all dimensions shown in millimeters)											
	P-AE			P-AF			P-AG			P-AH		
Symbol	Min	Max	Note	Min	Max	Note	Min	Max	Note	Min	Max	Note
D/E	34.04	35.05		36.58	37.59		39.12	40.38		41.66	42.67	
D1/E1	30.48 BSC			33.02 BSC			35.56 BSC			38.10 BSC		
aaa	---	0.76		---	0.76		---	0.76		---	0.76	
M	13		3	14		3	15		3	16		3
N	---	169	4	---	196	4	---	225	4	---	256	4
S	.00 BSC			1.27 BSC			.00 BSC			1.27 BSC		
Notes	1, 2, 12, 16											

	"Large outline" variations (all dimensions shown in millimeters)											
	P-AJ			P-AK			P-AL			P-AM		
Symbol	Min	Max	Note	Min	Max	Note	Min	Max	Note	Min	Max	Note
D/E	44.00	45.21		46.74	47.75		49.28	50.29		51.82	52.83	
D1/E1	40.64 BSC			43.18 BSC			45.72 BSC			48.26 BSC		
aaa	---	0.76		---	0.76		---	0.76		---	0.76	
M	17		3	18		3	19		3	20		3
N	---	289	4	---	324	4	---	361	4	---	400	4
S	.00 BSC			1.27 BSC			.00 BSC			1.27 BSC		
Notes	1, 2, 12, 16											

	"Small outline" variations (all dimensions shown in inches)											
	P-BA			P-BB			P-BC			P-AB		
Symbol	Min	Max	Note	Min	Max	Note	Min	Max	Note	Min	Max	Note
D/E	.890	.935		.990	1.035		1.090	1.135		1.190	1.235	
D1/E1	.800 BSC			.900 BSC			1.000 BSC			1.100 BSC		
aaa	---	.020	15	---	.020	15	---	.020	15	---	.020	15
M	9		3	10		3	11		3	12		3
N	---	81	4	---	100	4	---	121	4	---	144	4
S	.000 BSC			.050 BSC			.000 BSC			.050 BSC		
Notes	1, 2, 12, 16											

	"Small outline" variations (all dimensions shown in inches)											
	P-BE			P-BF			P-BG			P-BH		
Symbol	Min	Max	Note	Min	Max	Note	Min	Max	Note	Min	Max	Note
D/E	1.290	1.335		1.390	1.435		1.490	1.535		1.590	1.635	
D1/E1	1.200 BSC			1.300 BSC			1.400 BSC			1.500 BSC		
aaa	---	.020	15	---	.020	15	---	.020	15	---	.020	15
M	13		3	14		3	15		3	16		3
N	---	169	4	---	196	4	---	225	4	---	256	4
S	.000 BSC			.050 BSC			.000 BSC			.050 BSC		
Notes	1, 2, 12, 16											

	"Small outline" variations (all dimensions shown in inches)											
	P-BJ			P-BK			P-BL			P-BM		
Symbol	Min	Max	Note	Min	Max	Note	Min	Max	Note	Min	Max	Note
D/E	1.690	1.735		1.790	1.835		1.890	1.935		1.990	2.035	
D1/E1	1.600 BSC			1.700 BSC			1.800 BSC			1.900 BSC		
aaa	---	.020	15	---	.020	15	---	.020	15	---	.020	15
M	17		3	18		3	19		3	20		3
N	---	289	4	---	324	4	---	361	4	---	400	4
S	.000 BSC			.050 BSC			.000 BSC			.050 BSC		
Notes	1, 2, 12, 16											

	"Small outline" variations (all dimensions shown in millimeters)											
	P-BA			P-BB			P-BC			P-BD		
Symbol	Min	Max	Note	Min	Max	Note	Min	Max	Note	Min	Max	Note
D/E	22.61	23.74		25.15	26.28		27.69	28.83		30.23	31.37	
D1/E1	20.32 BSC			22.86 BSC			25.40 BSC			25.94 BSC		
aaa	---	0.51	15	---	0.51	15	---	0.51	15	---	0.51	15
M	9		3	10		3	11		3	12		3
N	---	81	4	---	100	4	---	121	4	---	144	4
S	.00 BSC			1.27 BSC			.00 BSC			1.27 BSC		
Notes	1, 2, 12, 16											

	"Small outline" variations (all dimensions shown in millimeters)											
	P-BE			P-BF			P-BG			P-BH		
Symbol	Min	Max	Note	Min	Max	Note	Min	Max	Note	Min	Max	Note
D/E	32.77	33.90		35.31	36.44		37.85	38.98		40.39	41.52	
D1/E1	30.48 BSC			33.02 BSC			35.56 BSC			38.10 BSC		
aaa	---	0.51	15	---	0.51	15	---	0.51	15	---	0.51	15
M	13		3	14		3	15		3	16		3
N	---	169	4	---	196	4	---	225	4	---	256	4
S	.00 BSC			1.27 BSC			.00 BSC			1.27 BSC		
Notes	1, 2, 12, 16											

	"Small outline" variations (all dimensions shown in millimeters)											
	P-BJ			P-BK			P-BL			P-BM		
Symbol	Min	Max	Note	Min	Max	Note	Min	Max	Note	Min	Max	Note
D/E	42.93	44.06		45.47	46.60		48.01	49.14		50.55	51.68	
D1/E1	40.64 BSC			43.18 BSC			45.72 BSC			48.26 BSC		
aaa	---	0.51	15	---	0.51	15	---	0.51	15	---	0.51	15
M	17		3	18		3	19		3	20		3
N	---	289	4	---	324	4	---	361	4	---	400	4
S	.00 BSC			1.27 BSC			.00 BSC			1.27 BSC		
Notes	1, 2, 12, 16											

NOTES:

1. See table VI for descriptive type designator.
2. Refer to 3.1.25 herein which lists and defines dimensioning symbols.
3. "M" represents the maximum pin matrix size.
4. "N" represents the maximum allowable number of pins. Specify in the electronic device acquisition document the actual number of pins needed within the maximum allowed, and the location of the pins within the matrix.
5. Dimension "A1" includes the package body and lid for both cavity-up and cavity-down configurations. The listed packages shall be identified as cavity up and optionally as cavity down in electronic device acquisition documents (see 5.2.8). Dimension "A1" does not include heatsinks or other attached features.
6. Standoffs are required and shall be located on the pin matrix diagonals. The seating plane is defined by the standoffs at dimensions Q or Q1.
7. Dimension "Q" applies to cavity-up configurations only. Dimension "Q1" applies to cavity-down configurations only (see reference drawing on figure 10).
8. All pins shall be on the .100 inch (2.54 mm) grid.
9. Datum "C" is the plane of pin to package interface for both cavity up and down configurations (see reference drawing on figure 10.)
10. Pin diameter includes solder dip or custom finishes. Pin tips shall have a radius or chamfer.
11. A pin "A1" identification shall be located at the index corner on both top and bottom surfaces of the package. The identification may be mechanical or graphical. It shall not include the manufacturer's identification. It may be different or the same on each surface.
12. Unless otherwise specified, a minimum clearance of .020 inch (0.51 mm) shall be maintained between all metallized features on the package surface.
13. Corner shape (chamfer, notch, radius, etc.) may vary from that shown on the drawing.
14. Dimension "S" is measured with respect to datums A and B.
15. For small outline packages, dimension aaa is measured with respect to datum A and B regardless of feature size.

NOTES - Continued.

16. The PGA alpha numeric grid system for designating terminal positions shall be as follows:
    a. A row-column grid system shall be used to designate the terminal positions.
    b. With the package viewed looking toward the seating plane and the reference or index corner in the lower left, the rows of the array shall be designated by the letters of the alphabet excluding I, O, Q, S, X, and Z from bottom to top. For packages having more than 20 rows, the 21st row shall be designated AA, the 22nd, AB, etc. The columns of the array shall be numbered from left to right.
    c. Since this system designates terminal positions, rows or columns without terminals shall be designated the same as if terminals were present.

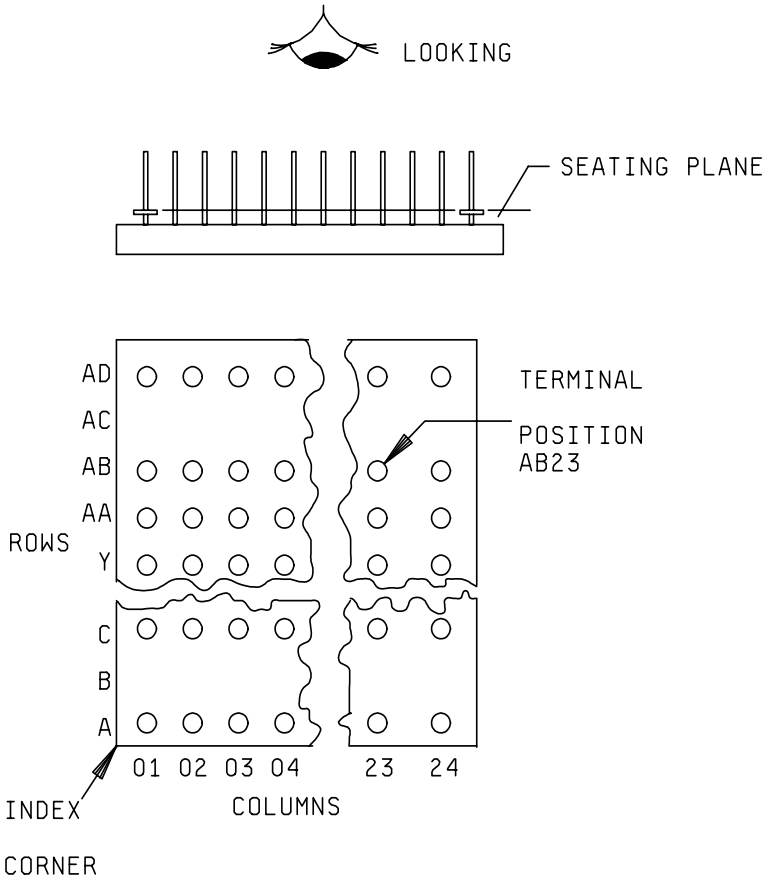

Example of 24 x 24 terminal position array
with no terminals present in rows B and AC.
Viewed looking toward seating plane.

REQUIREMENT 112

METAL BASE FLANGE MOUNT STYLE

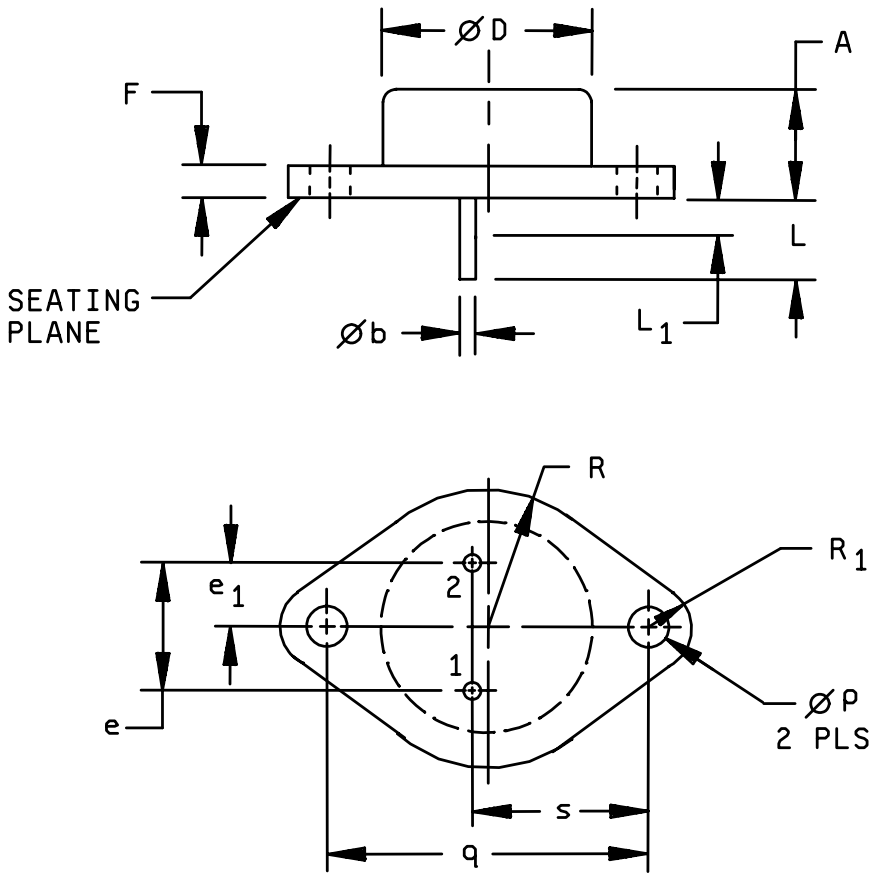

Configuration A

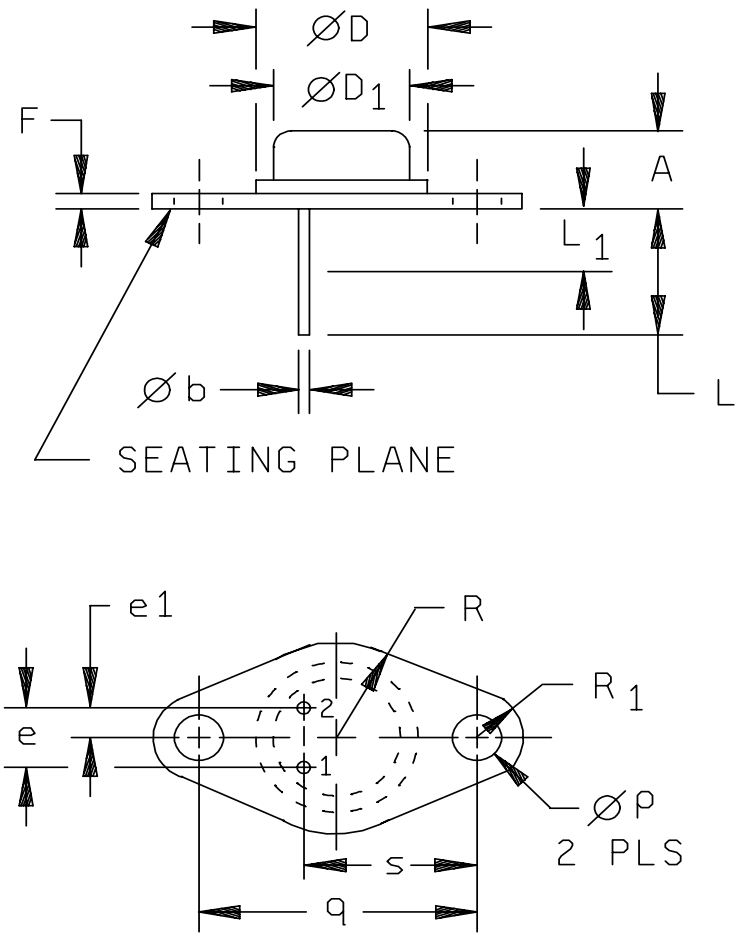

Configuration B

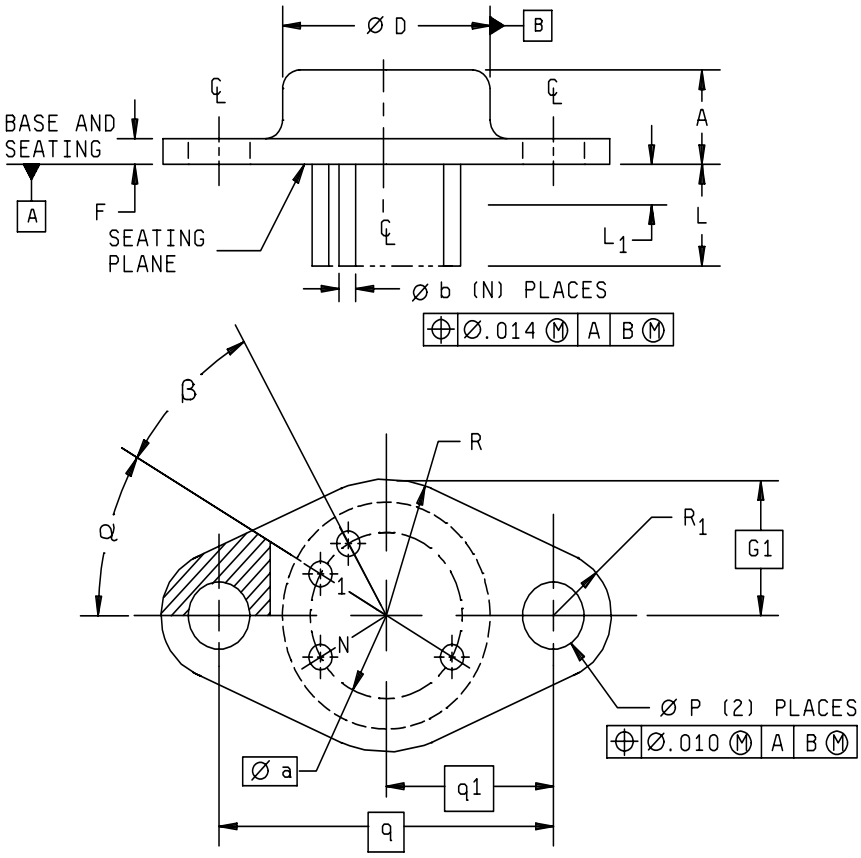

Configuration C

Symbol	Variations (all dimensions shown in inches)								
	AA Config. A			AB Config. A			AC Config. A		
	Min	Max	Note	Min	Max	Note	Min	Max	Note
A	.250	.360		.250	.360		.250	.360	
∅a									
∅b	.038	.043	4, 6	.048	.053	4, 6	.058	.063	4, 6
∅D	---	.875		---	.875		---	.875	
∅D1									
e	.420	.440	3	.420	.440	3	.420	.440	3
e1	.205	.225	3	.205	.225	3	.205	.225	3
F	.060	.135		.060	.135		.060	.135	
G1									
L	.312	.500		.312	.500		.312	.500	
L1	---	.050	6	---	.050	6	---	.050	6
∅p	.151	.165	4	.151	.165	4	.151	.165	4
q	1.177	1.197		1.177	1.197		1.177	1.197	
q1									
R	.495	.525	4	.495	.525	4	.495	.525	4
R1	.131	.188	4	.131	.188	4	.131	.188	4
S	.655	.675		.655	.675		.655	.675	
α									
β									
N	2			2			2		
Note	1, 2, 5								

	Variations (all dimensions shown in millimeters)								
	AA Config. A			AB Config. A			AC Config. A		
Symbol	Min	Max	Note	Min	Max	Note	Min	Max	Note
A	6.35	9.14		6.35	9.14		6.35	9.14	
∅a									
∅b	0.97	1.09	4, 6	1.22	1.35	4, 6	1.47	1.60	4, 6
∅D	---	22.22		---	22.22		---	22.22	
∅D1									
e	10.67	11.18	3	10.67	11.18	3	10.67	11.18	3
e1	5.21	5.72	3	5.21	5.72	3	5.21	5.72	3
F	1.52	3.43		1.52	3.43		1.52	3.43	
G1									
L	7.92	12.70		7.92	12.70		7.92	12.70	
L1	---	1.27	6	---	1.27	6	---	1.27	6
∅p	3.84	4.19	4	3.84	4.19	4	3.84	4.19	4
q	29.90	30.40		29.90	30.40		29.90	30.40	
q1									
R	12.57	13.34	4	12.57	13.34	4	12.57	13.34	4
R1	3.33	4.78	4	3.33	4.78	4	3.33	4.78	4
S	16.64	17.15		16.64	17.15		16.64	17.15	
α									
β									
N	2			2			2		
Note	1, 2, 5								

	Variations											
	AD Config. B (inches)		AD Config. B (millimeters)			AE Config. C (inches)			AE Config. C (millimeters)			
Symbol	Min	Max	Min	Max	Note	Min	Nom	Max	Min	Nom	Max	Note
A	.250	.340	6.35	8.64		.200	.220	.300	5.08	5.59	7.62	
∅a						.600 BSC			15.24 BSC			
∅b	.028	.034	0.71	0.86	4, 6	.025	.030	.035	0.64	0.76	0.89	6
∅D	---	.620	---	15.74		.755	.768	.780	19.18	19.91	19.81	
∅D1	.470	.500	11.94	12.70								
e	.190	.210	4.83	5.33	3							
e1	.093	.107	2.36	2.72	3	.300 BSC			7.62 BSC			3
F	.050	.075	1.27	1.91		.085	.093	.100	2.16	2.36	2.54	
G1						.500 BSC			12.70 BSC			
L	.360	.500	9.14	12.70		.340	.380	.420	8.54	9.65	10.67	
L1	---	.050	---	1.27	6	---	---	.025	---	---	0.64	6
∅p	.142	.152	3.61	3.86	4	.151	.156	.161	3.84	3.96	4.09	4
q	.958	.962	24.33	24.43		1.187 BSC			30.15 BSC			
q1						.5935 BSC			15.075 BSC			3
R	---	.350	---	8.89	4	.488	.500	.512	12.40	12.70	13.00	4
R1	.115	.145	2.92	3.68	4	.160	.171	.182	4.06	4.34	4.62	4
S	.570	.590	14.48	14.99	6							
α						22.5° BSC			22.5° BSC			
β						22.5° BSC			22.5° BSC			
N	2		2			15			15			
Note	1, 2, 5											

NOTES:

1. Dimensions are in inches.
2. For configuration C a terminal 1 identification mark shall be located in the shaded index area shown. Terminal 1 shall be located immediately adjacent to and clockwise from the index area. Terminal numbers shall increase in a clockwise direction when viewed as shown.
3. These dimensions should be measured at points .050 inch (1.27 mm) +.005 inch (0.13 mm) -.000 inch (0.00 mm) below seating plane. When gauge is not used, measurement will be made at the seating plane.
4. Two places.
5. The seating plane of the header shall be flat within .001 inch (0.03 mm) concave to .004 inch (0.10 mm) convex inside a .930 inch (23.62 mm) diameter circle on the center of the header and flat within .001 inch (0.03 mm) concave to .006 inch (0.15 mm) convex overall.
6. Lead diameter and glass meniscus shall not exceed twice ∅b within L1.

REQUIREMENT 113

DUAL LEADLESS CHIP CARRIER STYLE

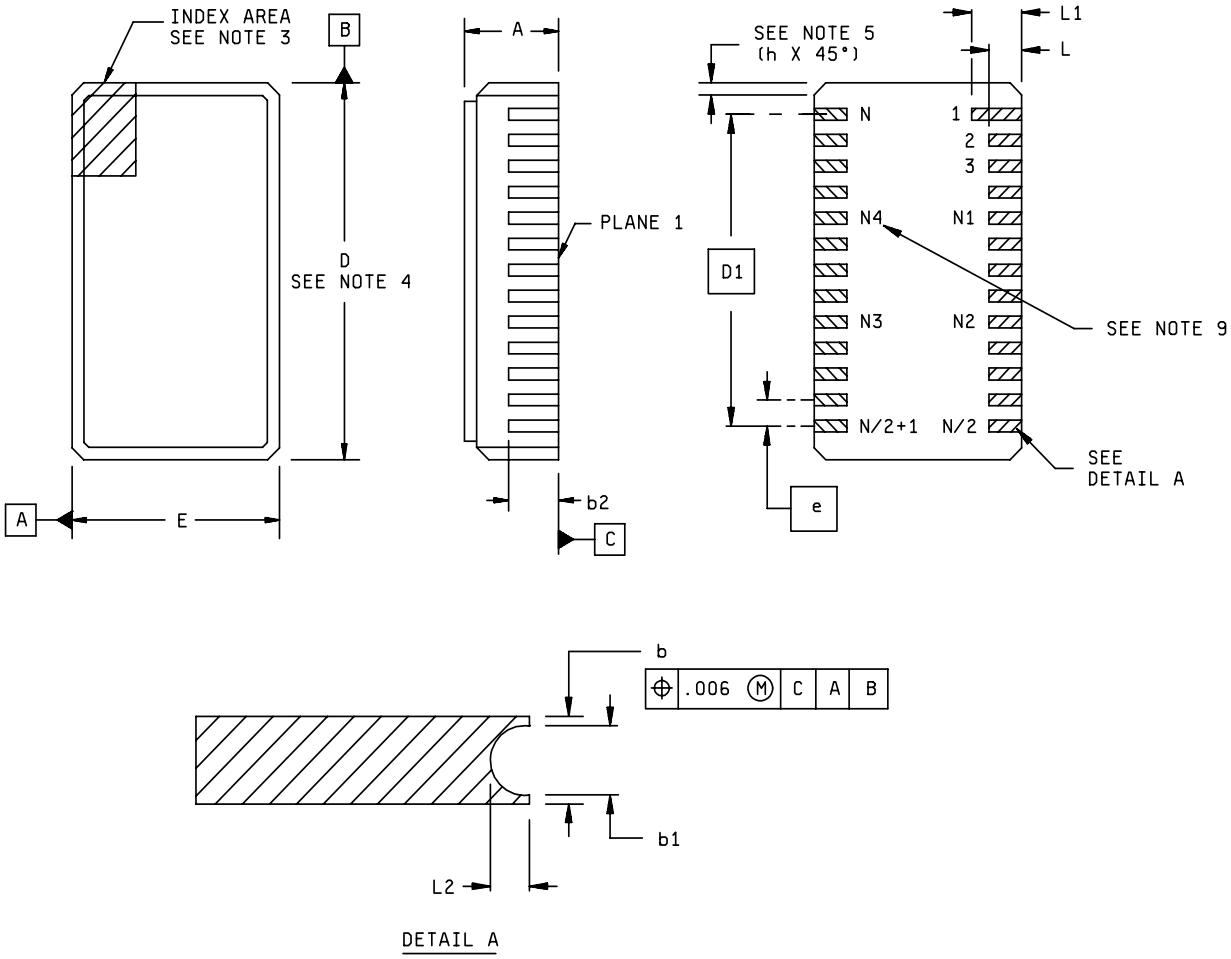

Symbol	Variations (all dimensions in inches)							
	DL-1				DL-2			
	Min	Nom	Max	Note	Min	Nom	Max	Note
A	.080	.090	.100		.080	.090	.100	
b	.022	.025	.028		.022	.025	.028	
b1	.006	.014	.022	2	.006	.014	.022	2
b2	.040	---	---	7	.040	---	---	7
D	.700	.720	.740	4	.800	.820	.840	4
D1	.650 BSC				.750 BSC			
E	.392	.400	.408	4	.392	.400	.408	4
e	.050 BSC				.050 BSC			
h	.012 REF			5	.012 REF			5
L	.070	.075	.080		.070	.075	.080	
L1	.090	.100	.110		.090	.100	.110	
L2	.003	.009	.015	2	.003	.009	.015	2
N	28			6	32			6
N1								
N2								
N3								
N4								
Note	1, 3, 8							

Symbol	Variations (all dimensions in millimeters)							
	DL-1				DL-2			
	Min	Nom	Max	Note	Min	Nom	Max	Note
A	2.03	2.29	2.54		2.03	2.29	2.54	
b	0.56	0.64	0.71		0.56	0.64	0.71	
b1	0.15	0.36	0.56	2	0.15	0.36	0.56	2
b2	1.02	---	---	7	1.02	---	---	7
D	17.78	18.29	18.80	4	20.32	20.83	21.34	4
D1	16.51 BSC				19.05 BSC			
E	9.96	10.16	10.36	4	9.96	10.16	10.36	4
e	1.27 BSC				1.27 BSC			
h	0.30 REF			5	0.30 REF			5
L	1.78	1.91	2.03		1.78	1.91	2.03	
L1	2.29	2.54	2.79		2.29	2.54	2.79	
L2	0.08	0.23	0.38	2	0.08	0.23	0.38	2
N	28			6	32			6
N1								
N2								
N3								
N4								
Note	1, 3, 8							

Symbol	Variations (all dimensions in inches)							
	DL-3				DL-4			
	Min	Nom	Max	Note	Min	Nom	Max	Note
A	.080	.090	.100		.060	.070	.080	
b	.022	.025	.028		.022	.025	.028	
b1	.006	.014	.022	2	.006	.014	.022	2
b2	.040	---	---	7	.030	---	---	7
D	.690	.700	.710	4	.665	.675	.685	4
D1	.600 BSC				.600 BSC			
E	.392	.400	.408	4	.340	.350	.360	4
e	.050 BSC				.050 BSC			
h	.012 REF			5	.012 REF			5
L	.070	.075	.080		.045	.050	.055	
L1	.105	.115	.125		.080	.090	.100	
L2	.003	.009	.015	2	.003	.009	.015	2
N	26			6	26			6
N1	5			9	5			9
N2	9			9	9			9
N3	18			9	18			9
N4	22			9	22			9
Note	1, 3, 8							

Symbol	Variations (all dimensions in millimeters)							
	DL-3				DL-4			
	Min	Nom	Max	Note	Min	Nom	Max	Note
A	2.03	2.29	2.54		1.52	1.78	2.03	
b	0.56	0.64	0.71		0.56	0.64	0.71	
b1	0.15	0.36	0.56	2	0.15	0.36	0.56	2
b2	1.02	---	---	7	0.76	---	---	7
D	17.53	17.78	18.03	4	16.89	17.15	17.40	4
D1	15.24 BSC				15.24 BSC			
E	9.96	10.16	10.36	4	8.64	8.89	9.14	4
e	1.27 BSC				1.27 BSC			
h	0.30 REF			5	0.30 REF			5
L	1.78	1.91	2.03		1.14	1.27	1.40	
L1	2.67	2.92	3.18		2.03	2.29	2.54	
L2	0.08	0.23	0.38	2	0.08	0.23	0.38	2
N	26			6	26			6
N1	5			9	5			9
N2	9			9	9			9
N3	18			9	18			9
N4	22			9	22			9
Note	1, 3, 8							

NOTES:

1. Controlling dimension: Inch.
2. Metallized castellations shall be connected to plane 1 terminals.
3. Index area: An identification mark shall be located adjacent to pin one within the shaded area shown. Plane 1 terminal identification may be an extension of the length of the metallized terminal which shall not be wider than the b dimension.
4. The cover shall not extend beyond the edges of the body.
5. The corner shape (square, notch, radius, etc.) may vary at the manufacturer's option.
6. N indicates total number of terminal positions.
7. Unless otherwise specified, a minimum clearance of .015 inch shall be maintained between all metallized features (e.g., lid, castellation, terminals, thermal pads, etc.).
8. Solder finish is optional with a maximum allowable thickness of .007 inch. Measurement of dimensions A, b1, and L2 may be made prior to solder application.
9. For terminal identification purposes only, terminals between N1 and N2 and between N3 and N4 are omitted if values for N1, N2, N3 and N4 are listed on the table.

REQUIREMENT 114

CERAMIC, QUAD LEADED CHIP CARRIER STYLE WITH NON-CONDUCTIVE TIE BAR

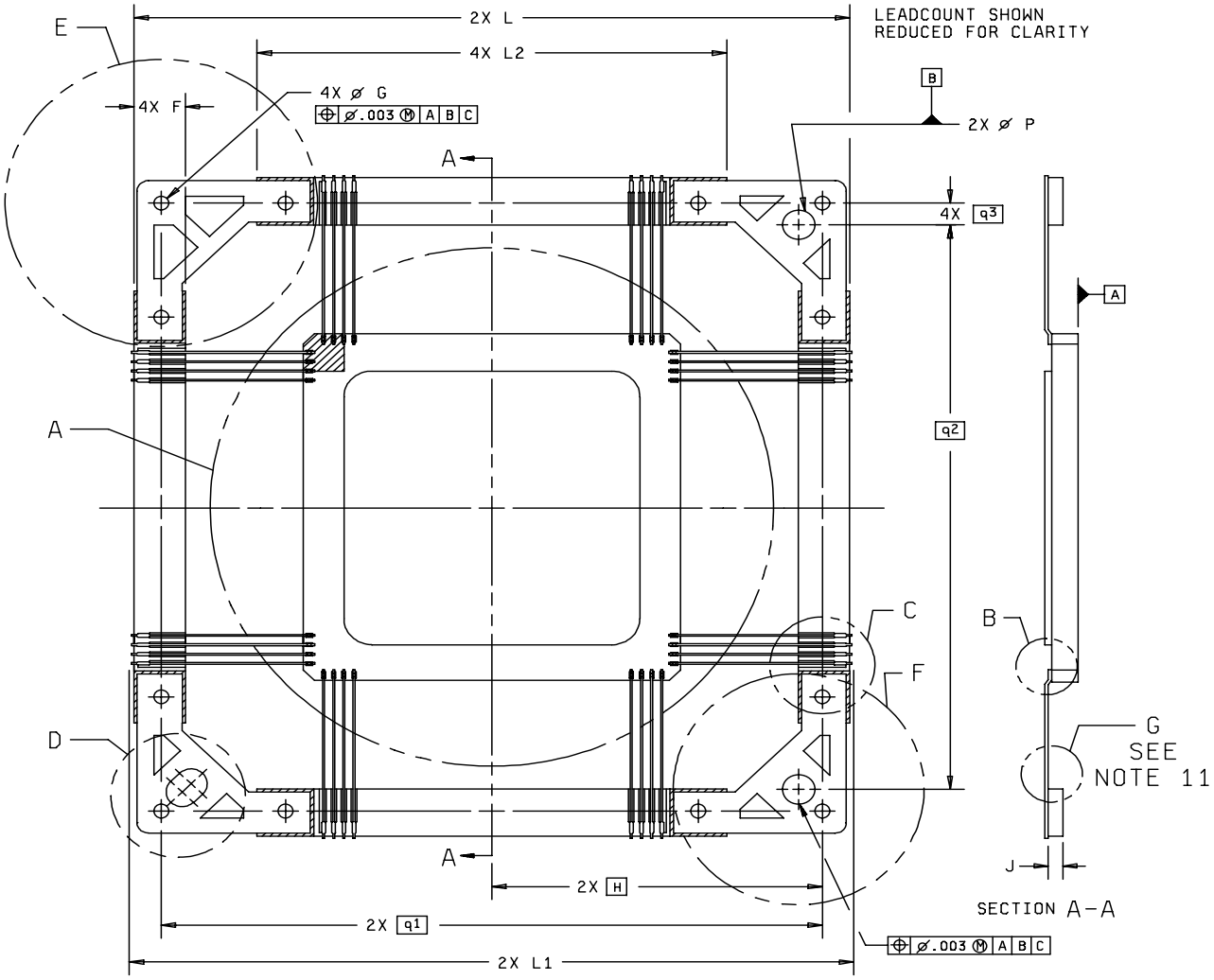

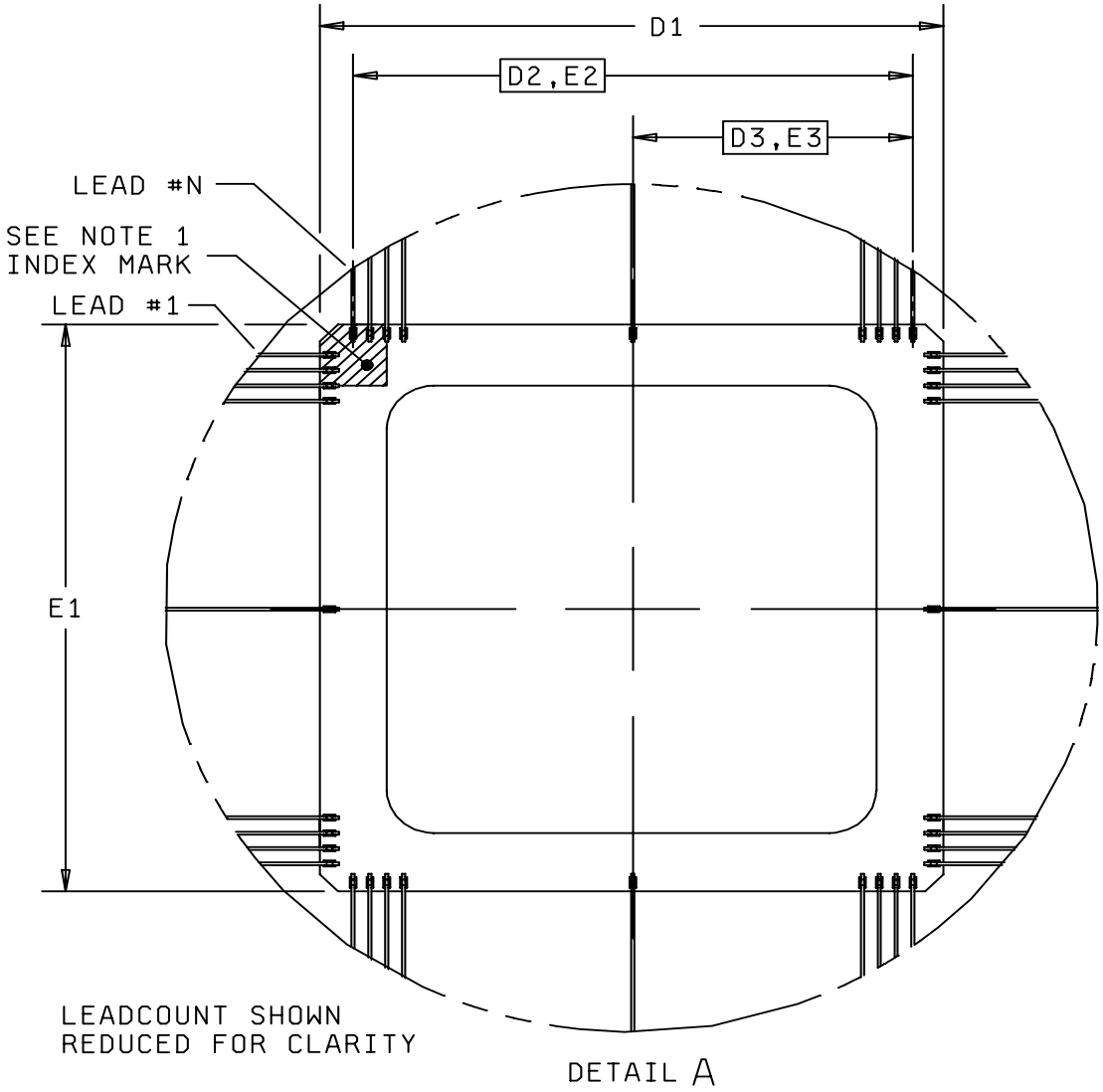
D1
D2,E2
D3,E3
LEAD #N
SEE NOTE 1
INDEX MARK
LEAD #1
E1
LEADCOUNT SHOWN
REDUCED FOR CLARITY
DETAIL A

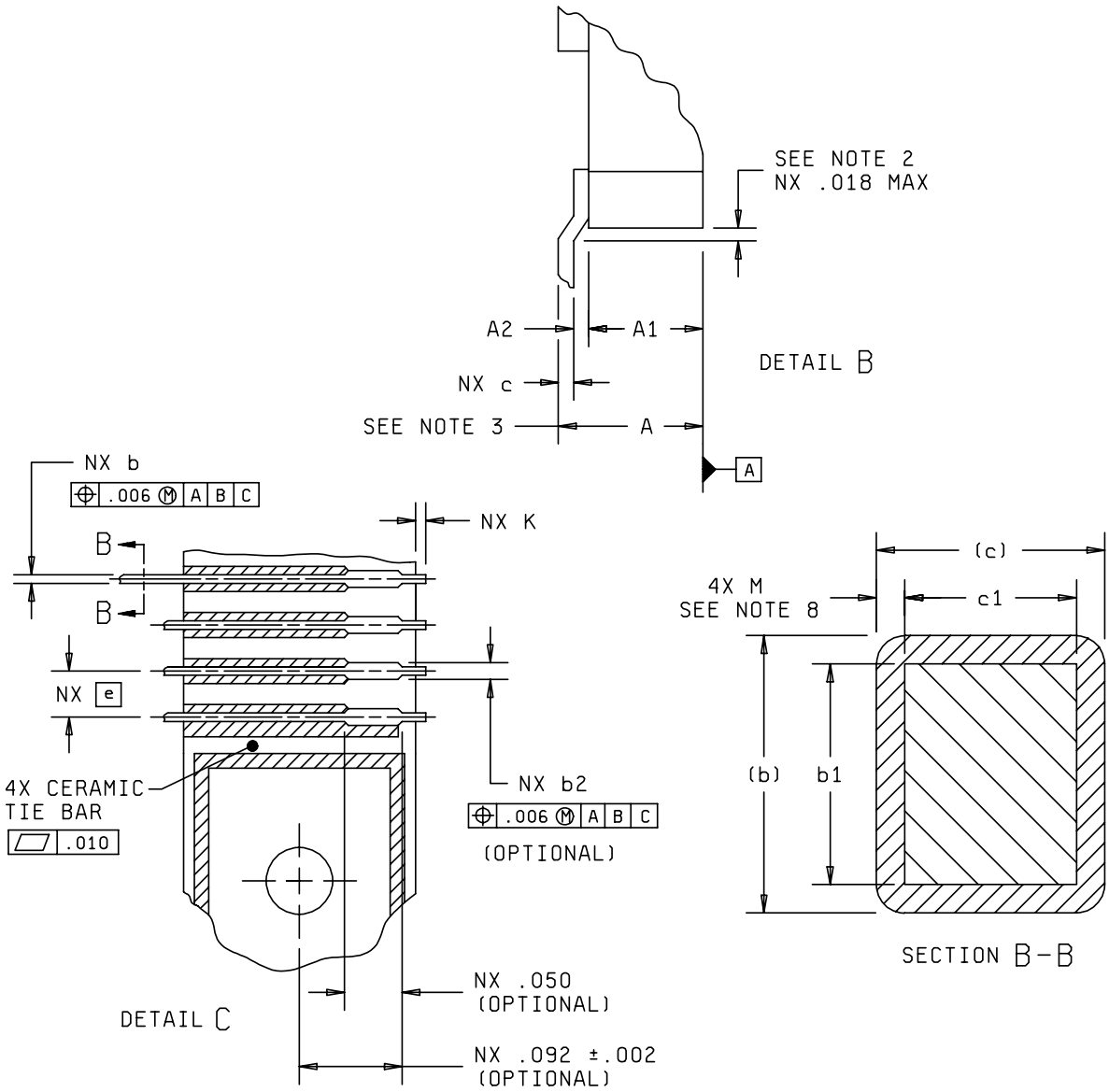
SEE NOTE 2
NX .018 MAX
A2
A1
DETAIL B
NX c
SEE NOTE 3
A
A
NX b
.006 M A B C
NX K
B
B
NX e
4X CERAMIC
TIE BAR
.010
NX b2
.006 M A B C
(OPTIONAL)
DETAIL C
NX .050
(OPTIONAL)
NX .092 ±.002
(OPTIONAL)
(c)
4X M
SEE NOTE 8
c1
(b)
b1
SECTION B-B

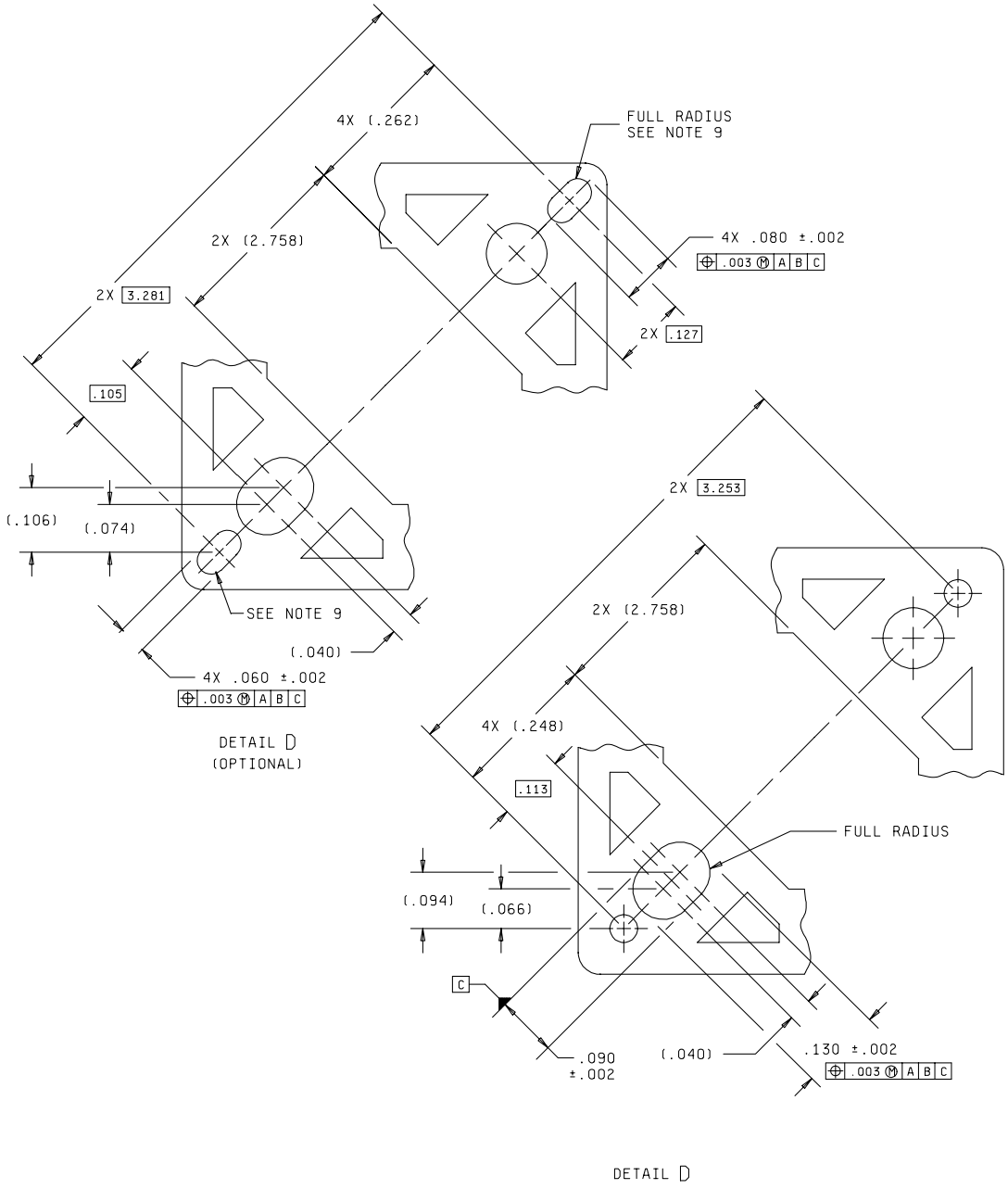
4X (.262)
FULL RADIUS
SEE NOTE 9
2X (2.758)
4X .080 ±.002
.003 M A B C
2X 3.281
2X .127
.105
(.106)
(.074)
SEE NOTE 9
(.040)
4X .060 ±.002
.003 M A B C
DETAIL D
(OPTIONAL)
2X 3.253
2X (2.758)
4X (.248)
.113
FULL RADIUS
(.094)
(.066)
C
.090
±.002
(.040)
.130 ±.002
.003 M A B C
DETAIL D

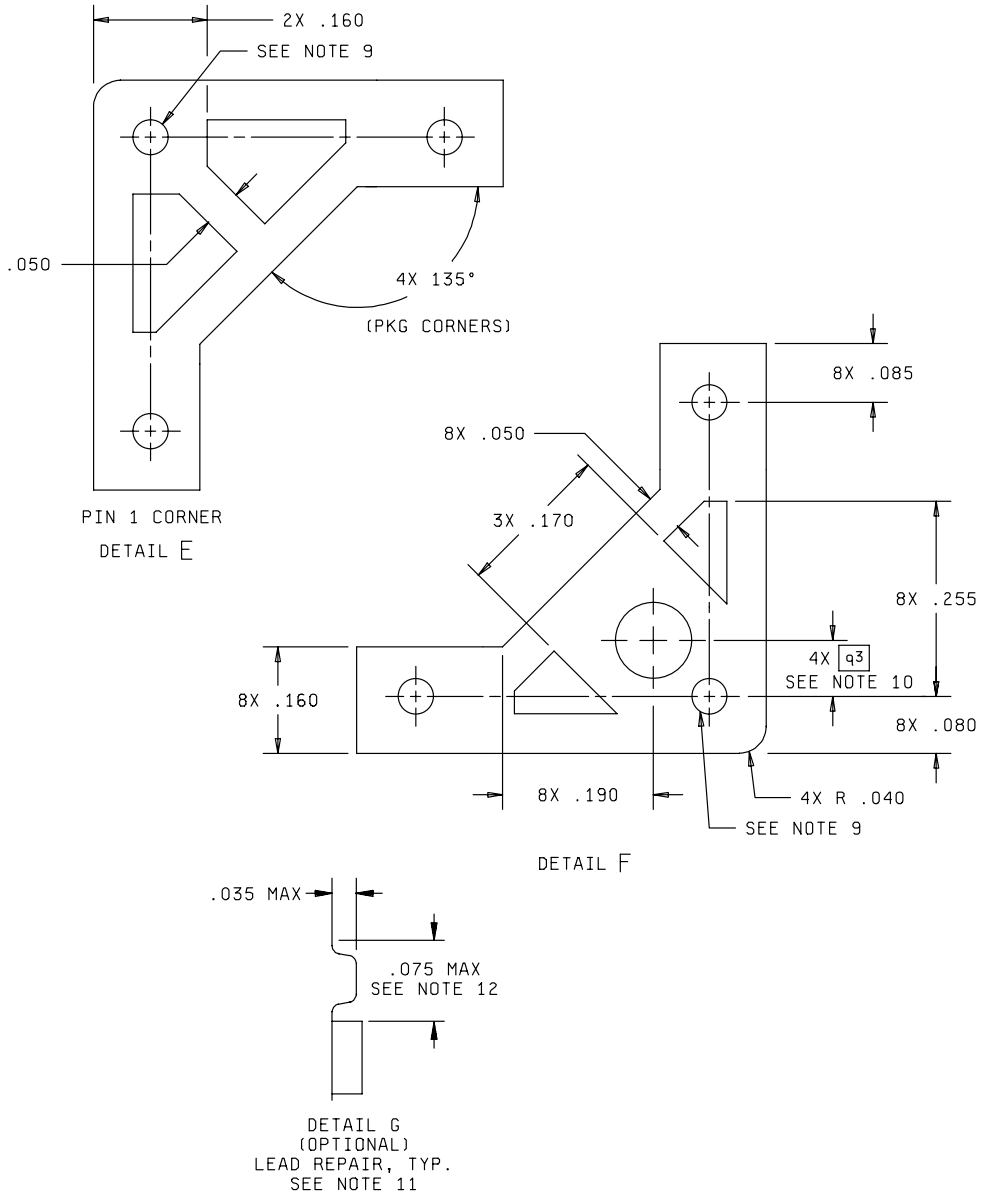

NOTE:
The user's attention is called to the possibility that compliance with this outline requirement may require use of an invention covered by patent rights; specifically, National Semiconductor, Inc. has stated that U. S. Patent No. 4,796,080 may relate to a certain implementation of this product outline. By publication of this outline requirement, no position is taken with respect to the validity of this claim of any patent rights in connection therewith.

Symbol	Variations (all dimensions in inches)											
	C-T1				C-T2				C-T3			
	Min	Nom	Max	Note	Min	Nom	Max	Note	Min	Nom	Max	Note
A	.086	.101	.140	3	.086	.101	.140	3	.086	.101	.140	3
A1	.078	.086	.125		.078	.086	.125		.078	.086	.125	
A2	.006	.009	.012		.006	.009	.012		.006	.009	.012	
b	.007	---	.013		.007	---	.013		.007	---	.013	
b1	.007	---	.010	8	.007	---	.010	8	.007	---	.010	8
b2	.0108	.0120	.0140		.0108	.0120	.0140		.0108	.0120	.0140	
c	.004	---	.009		.004	---	.009		.004	---	.009	
c1	.004	---	.006	8	.004	---	.006	8	.004	---	.006	8
D1/E1	.735	.750	.765		.935	.950	.965		1.120	1.130	1.165	
D2/E2	.600 BSC				.800 BSC				1.000 BSC			
D3/E3	.300 BSC				.400 BSC				.500 BSC			
e	.025 BSC				.025 BSC				.025 BSC			
F	.425	.450	.475		.325	.350	.375		.275	.300	.325	
∅G	.059	.060	.061		.059	.060	.061		.059	.060	.061	
H	1.150 BSC				1.150 BSC				1.150 BSC			
J	.030	.035	.040		.030	.035	.040		.030	.035	.040	
K	---	---	.020		---	---	.020		---	---	.020	
L	2.500	---	2.540		2.500	---	2.540		2.500	---	2.540	
L1	2.485	2.500	2.505		2.485	2.500	2.505		2.485	2.500	2.505	
L2	1.480	1.500	1.520		1.480	1.500	1.520		1.480	1.500	1.520	
M	---	---	.0015	8	---	---	.0015	8	---	---	.0015	8
N	100			5	132			5	164			5
ND/NE	25			6	33			6	41			6
q1	2.300 BSC				2.300 BSC				2.300 BSC			
q2	2.140 BSC				2.140 BSC				2.140 BSC			
q3	.080 BSC				.080 BSC				.080 BSC			
∅P	.098	.100	.102		.098	.100	.102		.098	.100	.102	
Note	4, 7, 9											

	Variations (all dimensions in millimeters)											
	C-T1				C-T2				C-T3			
Symbol	Min	Nom	Max	Note	Min	Nom	Max	Note	Min	Nom	Max	Note
A	2.18	2.57	3.56	3	2.18	2.57	3.56	3	2.18	2.57	3.56	3
A1	1.98	2.18	3.18		1.98	2.18	3.18		1.98	2.18	3.18	
A2	0.15	0.23	0.30		0.15	0.23	0.30		0.15	0.23	0.30	
b	0.18	---	0.33		0.18	---	0.33		0.18	---	0.33	
b1	0.18	---	0.25	8	0.18	---	0.25	8	0.18	---	0.25	8
b2	0.27	0.30	0.36		0.27	0.30	0.36		0.27	0.30	0.36	
c	0.10	---	0.23		0.10	---	0.23		0.10	---	0.23	
c1	0.10	---	0.15	8	0.10	---	0.15	8	0.10	---	0.15	8
D1/E1	18.67	19.05	19.43		23.75	24.13	24.51		28.45	28.70	29.59	
D2/E2	15.24 BSC				20.32 BSC				25.40 BSC			
D3/E3	7.62 BSC				10.16 BSC				12.70 BSC			
e	6.35 BSC				6.35 BSC				6.35 BSC			
F	10.80	11.43	12.07		8.26	8.89	9.53		6.99	7.62	8.26	
∅G	1.50	1.52	1.55		1.50	1.52	1.55		1.50	1.52	1.55	
H	29.21 BSC				29.21 BSC				29.21 BSC			
J	0.76	0.89	1.02		0.76	0.89	1.02		0.76	0.89	1.02	
K	---	---	0.51		---	---	0.51		---	---	0.51	
L	63.50	---	64.52		63.50	---	64.52		63.50	---	64.52	
L1	63.12	63.50	63.63		63.12	63.50	63.63		63.12	63.50	63.63	
L2	37.59	38.10	38.61		37.59	38.10	38.61		37.59	38.10	38.61	
M	---	---	0.04	8	---	---	0.04	8	---	---	0.04	8
N	100			5	132			5	164			5
ND/NE	25			6	33			6	41			6
q1	58.42 BSC				58.42 BSC				58.42 BSC			
q2	54.36 BSC				54.36 BSC				54.36 BSC			
q3	2.03 BSC				2.03 BSC				2.03 BSC			
∅P	2.49	2.54	2.59		2.49	2.54	2.59		2.49	2.54	2.59	
Note	4, 7, 9											

Symbol	Variations (all dimensions in inches)							
	C-T4				C-T5			
	Min	Nom	Max	Note	Min	Nom	Max	Note
A	.086	.101	.140	3	.086	.101	.140	3
A1	.078	.086	.125		.078	.086	.125	
A2	.006	.009	.012		.006	.009	.012	
b	.007	---	.013		.007	---	.013	
b1	.007	---	.010	8	.007	---	.010	8
b2	.0108	.0120	.0140		.0108	.0120	.0140	
c	.004	---	.009		.004	---	.009	
c1	.004	---	.006	8	.004	---	.006	8
D1/E1	1.125	1.150	1.165		1.325	1.350	1.365	
D2/E2	1.050 BSC				1.200 BSC			
D3/E3	.525 BSC				.600 BSC			
e	.025 BSC				.025 BSC			
F	.175	.200	.225		.175	.200	.225	
∅G	.059	.060	.061		.059	.060	.061	
H	1.150 BSC				1.150 BSC			
J	.030	.035	.040		.030	.035	.040	
K	---	---	.020		---	---	.020	
L	2.500	---	2.540		2.500	---	2.540	
L1	2.485	2.500	2.505		2.485	2.500	2.505	
L2	1.690	1.700	1.710		1.690	1.700	1.710	
M	---	---	.0015	8	---	---	.0015	8
N	172			5	196			5
ND/NE	43			6	49			6
q1	2.300 BSC				2.300 BSC			
q2	2.140 BSC				2.140 BSC			
q3	.080 BSC				.080 BSC			
∅P	.098	.100	.102		.098	.100	.102	
Note	4, 7, 9							

	Variations (all dimensions in millimeters)							
	C-T4				C-T5			
Symbol	Min	Nom	Max	Note	Min	Nom	Max	Note
A	2.18	2.57	3.56	3	2.18	2.57	3.56	3
A1	1.98	2.18	3.18		1.98	2.18	3.18	
A2	0.15	0.23	0.30		0.15	0.23	0.30	
b	0.18	---	0.33		0.18	---	0.33	
b1	0.18	---	0.25	8	0.18	---	0.25	8
b2	0.27	0.30	0.36		0.27	0.30	0.36	
c	0.10	---	0.23		0.10	---	0.23	
c1	0.10	---	0.15	8	0.10	---	0.15	8
D1/E1	28.58	29.21	29.59		33.65	34.29	34.67	
D2/E2	26.67 BSC				30.48 BSC			
D3/E3	13.34 BSC				15.24 BSC			
e	6.35 BSC				6.35 BSC			
F	4.44	5.08	5.72		4.44	5.08	5.72	
∅G	1.50	1.52	1.55		1.50	1.52	1.55	
H	29.21 BSC				29.21 BSC			
J	0.76	0.89	1.02		0.76	0.89	1.02	
K	---	---	0.51		---	---	0.51	
L	63.50	---	64.52		63.50	---	64.52	
L1	63.12	63.50	63.63		63.12	63.50	63.63	
L2	42.93	43.18	43.43		42.93	43.18	43.43	
M	---	---	0.04	8	---	---	0.04	8
N	172			5	196			5
ND/NE	43			6	49			6
q1	58.42 BSC				58.42 BSC			
q2	54.36 BSC				54.36 BSC			
q3	2.03 BSC				2.03 BSC			
∅P	2.49	2.54	2.59		2.49	2.54	2.59	
Note	4 ,7 ,9							

NOTES:

1. A terminal 1 identification mark shall be located at the index corner in the shaded area shown. Terminal 1 is located immediately adjacent to and counterclockwise from the index corner. Terminal numbers increase in a counterclockwise direction when viewed as shown.
2. Generic lead attach dogleg depiction. May be flat lead configuration.
3. Includes lead attach dogleg height and lid height, whichever is greater. Dimension A and A1 do not include heat sinks or other attached features.
4. Corner chamfers and or notches are optional. Pin 1 may have optional feature (larger or smaller chamfer or notch) for mechanical orientation purposes.
5. Dimension N: Number of terminals.
6. Dimension ND/NE: Number of terminals per package edge.
7. Controlling dimension: Inch.
8. Dimensions b1 and c1 apply to base metal only, dimension M applies to the plating thickness.
9. Optional hole configuration applicable to all four corners.
10. Circular corner hole only. Slotted hole locations are shown on detail D (optional).
11. Lead repair is optional. This view shows the drawn portion of the lead that must reside within these dimensions. The shape of the repaired lead (as shown) is for reference only.
12. Coplanarity requirements do not apply in this area of a repaired lead.

REQUIREMENT 115

CERAMIC, ZIG-ZAG IN-LINE PACKAGE STYLE

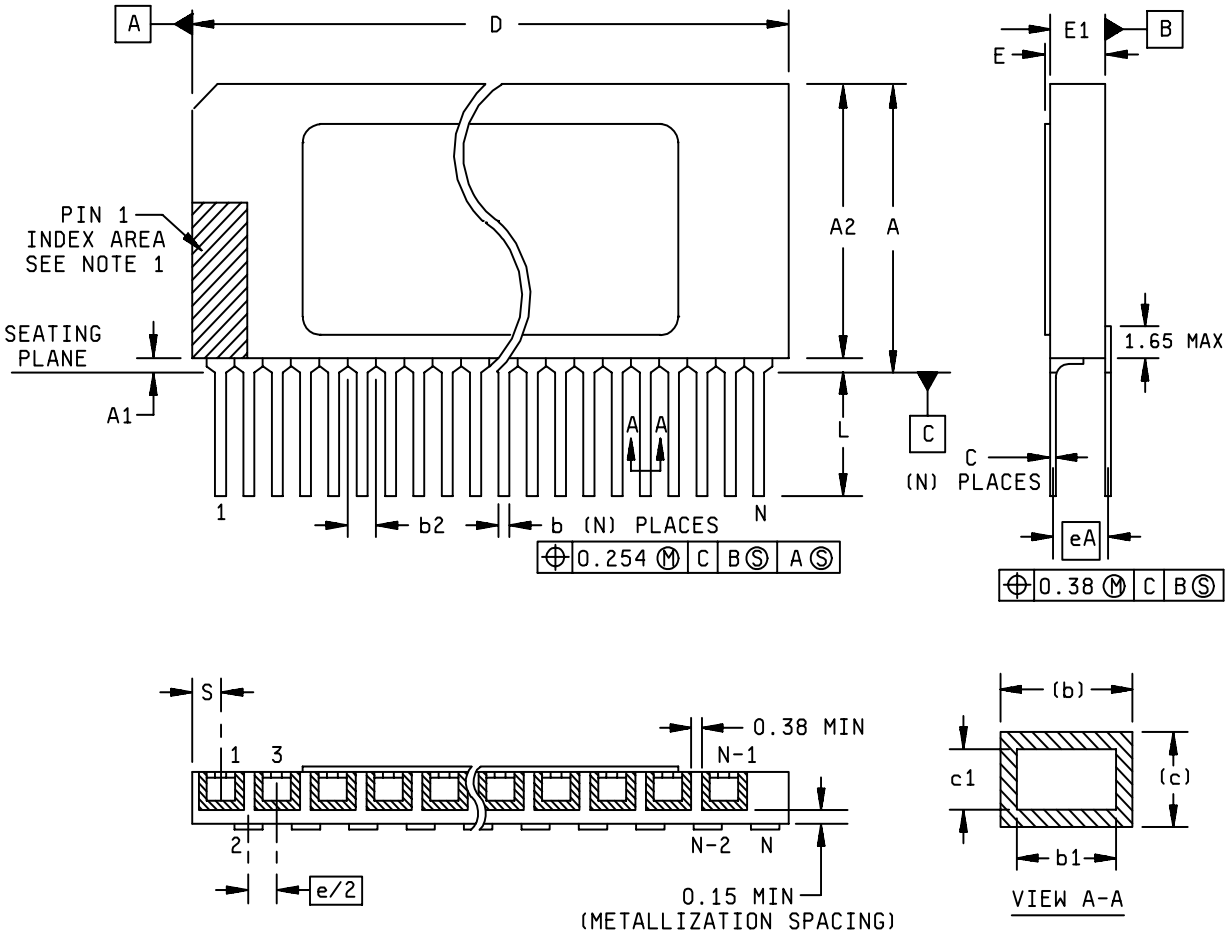

	Variations (all dimensions in millimeters)											
	Z-1				Z-2				Z-3			
Symbol	Min	Nom	Max	Note	Min	Nom	Max	Note	Min	Nom	Max	Note
A	9.30	---	11.15		11.45	---	13.35		11.45	---	13.35	
A1	0.40	---	1.50		0.40	---	1.50		0.40	---	1.50	
A2	8.90	9.25	9.65		11.05	11.45	11.85		11.05	11.45	11.85	
b	0.35	---	0.65		0.35	---	0.65		0.35	---	0.65	
b1	0.35	0.45	0.60	5	0.35	0.45	0.60	5	0.35	0.45	0.60	5
b2	0.90	---	1.65		0.90	---	1.65		0.90	---	1.65	
c	0.20	---	0.45		0.20	---	0.45		0.20	---	0.45	
c1	0.20	0.25	0.40	5	0.20	0.25	0.40	5	0.20	0.25	0.40	5
D	25.90	26.65	27.45		31.00	31.75	32.50		36.05	36.85	37.60	
E	2.40	---	3.45	7	2.40	---	3.45	7	2.40	---	3.45	7
E1	2.15	2.55	2.95		2.15	2.55	2.95		2.15	2.55	2.95	
e/2	1.27 BSC				1.27 BSC				1.27 BSC			
eA	2.54 BSC				2.54 BSC				2.54 BSC			
L	3.20	---	5.10		3.20	---	5.10		3.20	---	5.10	
S	0.90	1.25	1.65		0.90	1.25	1.65		0.90	1.25	1.65	
N	20			4	24			4	28			4
Note	1, 2, 3, 6, 8											

NOTES:

1. See table VI for descriptive type designator.
2. A lead one identification mark shall be located adjacent to lead one within the shaded area shown.
3. Corner shape (square, chamfer, radius, etc.) may vary at the manufacturer's option.
4. N indicates the maximum number of leads.
5. Dimension b1 and c1 apply to base metal only.
6. Twenty lead device shown for illustration purposes only.
7. Dimension E1 does not include lid thickness.
8. Nominal dimensions are the dimensions recommended for design and manufacture.

REQUIREMENT 116

CERAMIC, STAGGERED PIN GRID ARRAY STYLE

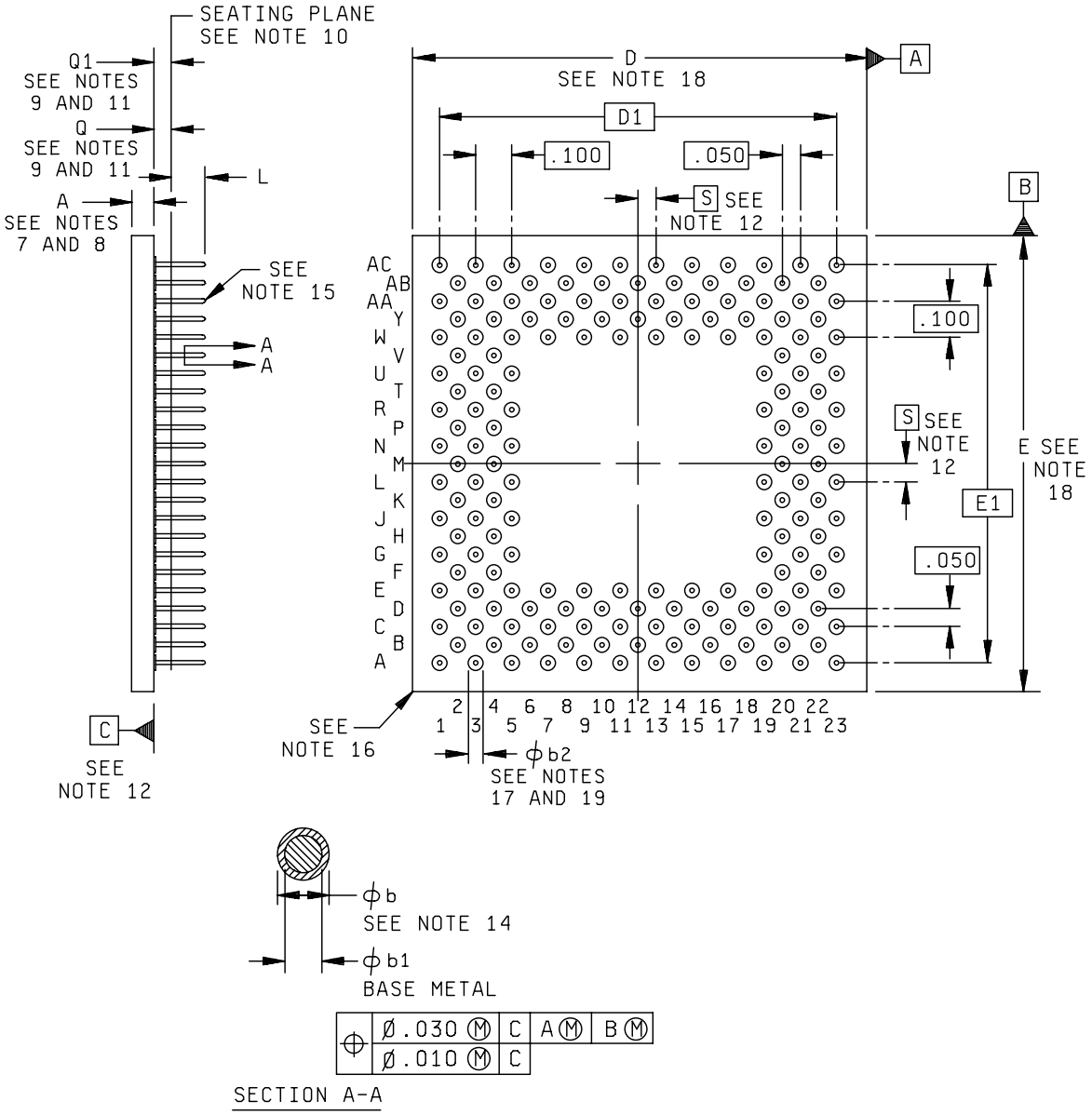

REFERENCE DRAWING

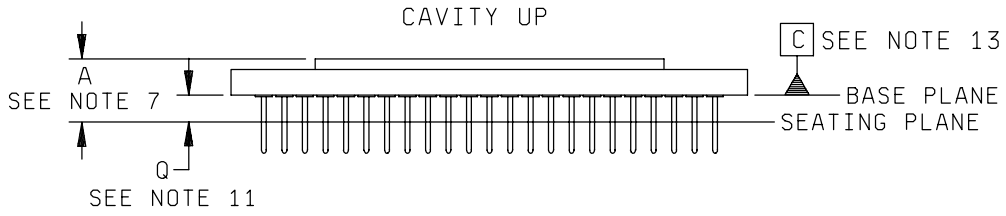

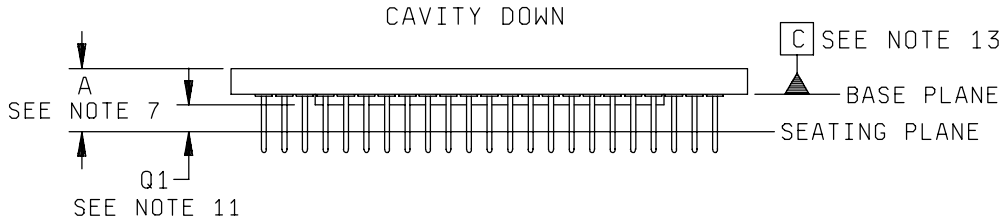

Symbol	Variations (all dimensions shown in inches)											
	P-CA				P-CB				P-CC			
	Min	Nom	Max	Note	Min	Nom	Max	Note	Min	Nom	Max	Note
A	.070	---	.165	7, 8	.070	---	.165	7, 8	.070	---	.165	7, 8
∅b	.0165	---	.0215	14	.0165	---	.0215	14	.0165	---	.0215	14
∅b1	.016	---	.020		.016	---	.020		.016	---	.020	
∅b2	---	---	.060	19	---	---	.060	19	---	---	.060	19
D	.940	.960	.980	18	1.040	1.060	1.080	18	1.140	1.160	1.180	18
D1	.800 BSC				.900 BSC				1.000 BSC			
E	.940	.960	.980	18	1.040	1.060	1.080	18	1.140	1.160	1.180	18
E1	.800 BSC				.900 BSC				1.000 BSC			
L	.120	---	.140		.120	---	.140		.120	---	.140	
Q	.040	---	.075	9, 11	.040	---	.075	9, 11	.040	---	.075	9, 11
Q1	.015	---	.075	9, 11	.015	---	.075	9, 11	.015	---	.075	9, 11
S	.000 BSC				.050 BSC				.000 BSC			
M		17		4		19		4		21		4
N			145	5			181	5			221	5
Notes	1, 2, 3, 6, 9, 16											

Symbol	Variations (all dimensions shown in millimeters)											
	P-CA				P-CB				P-CC			
	Min	Nom	Max	Note	Min	Nom	Max	Note	Min	Nom	Max	Note
A	1.78	---	4.19	7, 8	1.78	---	4.19	7, 8	1.78	---	4.19	7, 8
∅b	0.42	---	0.55	14	0.42	---	0.55	14	0.42	---	0.55	14
∅b1	0.41	---	0.51		0.41	---	0.51		0.41	---	0.51	
∅b2	---	---	1.52	19	---	---	1.52	19	---	---	1.52	19
D	23.88	24.38	24.89	18	26.42	26.92	27.43	18	28.96	29.46	29.97	18
D1	22.35 BSC				22.86 BSC				25.40 BSC			
E	23.88	24.38	24.89	18	26.42	26.92	27.43	18	28.96	29.46	29.97	18
E1	22.35 BSC				22.86 BSC				25.40 BSC			
L	3.05	---	3.56		3.05	---	3.56		3.05	---	3.56	
Q	1.02	---	1.91	9, 11	1.02	---	1.91	9, 11	1.02	---	1.91	9, 11
Q1	0.38	---	1.91	9, 11	0.38	---	1.91	9, 11	0.38	---	1.91	9, 11
S	.00 BSC				1.27 BSC				.00 BSC			
M		17		4		19		4		21		4
N			145	5			181	5			221	5
Notes	1, 2, 3, 6, 9, 16											

Symbol	Variations (all dimensions shown in inches)											
	P-CD				P-CE				P-CF			
	Min	Nom	Max	Note	Min	Nom	Max	Note	Min	Nom	Max	Note
A	.070	---	.165	7, 8	.070	---	.165	7, 8	.070	---	.165	7, 8
∅b	.0165	---	.0215	14	.0165	---	.0215	14	.0165	---	.0215	14
∅b1	.016	---	.020		.016	---	.020		.016	---	.020	
∅b2	---	---	.060	19	---	---	.060	19	---	---	.060	19
D	1.240	1.260	1.280	18	1.340	1.360	1.380	18	1.440	1.460	1.480	18
D1	1.100 BSC				1.200 BSC				1.300 BSC			
E	1.240	1.260	1.280	18	1.340	1.360	1.380	18	1.440	1.460	1.480	18
E1	1.100 BSC				1.200 BSC				1.300 BSC			
L	.120	---	.140		.120	---	.140		.120	---	.140	
Q	.040	---	.075	9, 11	.040	---	.075	9, 11	.040	---	.075	9, 11
Q1	.015	---	.075	9, 11	.015	---	.075	9, 11	.015	---	.075	9, 11
S	.050 BSC				.000 BSC				.050 BSC			
M		23		4		25		4		27		4
N			265	5			313	5			365	5
Notes	1, 2, 3, 6, 9, 16											

Symbol	Variations (all dimensions shown in millimeters)											
	P-CD				P-CE				P-CF			
	Min	Nom	Max	Note	Min	Nom	Max	Note	Min	Nom	Max	Note
A	1.78	---	4.19	7, 8	1.78	---	4.19	7, 8	1.78	---	4.19	7, 8
∅b	0.42	---	0.55	14	0.42	---	0.55	14	0.42	---	0.55	14
∅b1	0.41	---	0.51		0.41	---	0.51		0.41	---	0.51	
∅b2	---	---	1.52	19	---	---	1.52	19	---	---	1.52	19
D	31.50	32.00	32.51	18	34.04	34.54	35.05	18	36.58	37.08	37.59	18
D1	29.94 BSC				30.48 BSC				33.02 BSC			
E	31.50	32.00	32.51	18	34.04	34.54	35.05	18	36.58	37.08	37.59	18
E1	29.94 BSC				30.48 BSC				33.02 BSC			
L	3.05	---	3.56		3.05	---	3.56		3.05	---	3.56	
Q	1.02	---	1.91	9, 11	1.02	---	1.91	9, 11	1.02	---	1.91	9, 11
Q1	0.38	---	1.91	9, 11	0.38	---	1.91	9, 11	0.38	---	1.91	9, 11
S	1.27 BSC				.00 BSC				1.27 BSC			
M		23		4		25		4		27		4
N			265	5			313	5			365	5
Notes	1, 2, 3, 6, 9, 16											

Symbol	Variations (all dimensions shown in inches)											
	P-CG				P-CH				P-CJ			
	Min	Nom	Max	Note	Min	Nom	Max	Note	Min	Nom	Max	Note
A	.070	---	.165	7,8	.070	---	.165	7, 8	.070	---	.165	7, 8
∅b	.0165	---	.0215	14	.0165	---	.0215	14	.0165	---	.0215	14
∅b1	.016	---	.020		.016	---	.020		.016	---	.020	
∅b2	---	---	.060	19	---	---	.060	19	---	---	.060	19
D	1.540	1.560	1.580	18	1.640	1.660	1.680	18	1.740	1.760	1.780	18
D1	1.400 BSC				1.500 BSC				1.600 BSC			
E	1.540	1.560	1.580	18	1.640	1.660	1.680	18	1.740	1.760	1.780	18
E1	1.400 BSC				1.500 BSC				1.600 BSC			
L	.120	---	.140		.120	---	.140		.120	---	.140	
Q	.040	---	.075	9,11	.040	---	.075	9,11	.040	---	.075	9,11
Q1	.015	---	.075	9,11	.015	---	.075	9,11	.015	---	.075	9,11
S	.000 BSC				.050 BSC				.000 BSC			
M		29		4		31		4		33		4
N			421	5			481	5			545	5
Notes	1, 2, 3, 6, 9, 16											

Symbol	Variations (all dimensions shown in millimeters)											
	P-CG				P-CH				P-CJ			
	Min	Nom	Max	Note	Min	Nom	Max	Note	Min	Nom	Max	Note
A	1.78	---	4.19	7, 8	1.78	---	4.19	7, 8	1.78	---	4.19	7, 8
∅b	0.42	---	0.55	14	0.42	---	0.55	14	0.42	---	0.55	14
∅b1	0.41	---	0.51		0.41	---	0.51		0.41	---	0.51	
∅b2	---	---	1.52	19	---	---	1.52	19	---	---	1.52	19
D	39.12	39.62	40.13	18	41.66	42.16	42.67	18	44.20	44.70	45.21	18
D1	35.56 BSC				38.10 BSC				40.64 BSC			
E	39.12	39.62	40.13	18	41.66	42.16	42.67	18	44.20	44.70	45.21	18
E1	35.56 BSC				38.10 BSC				40.64 BSC			
L	3.05	---	3.56		3.05	---	3.56		3.05	---	3.56	
Q	1.02	---	1.91	9, 11	1.02	---	1.91	9, 11	1.02	---	1.91	9, 11
Q1	0.38	---	1.91	9, 11	0.38	---	1.91	9, 11	0.38	---	1.91	9, 11
S	.00 BSC				1.27 BSC				.00 BSC			
M		29		4		31		4		33		4
N			421	5			481	5			545	5
Notes	1, 2, 3, 6, 9, 16											

Symbol	Variations (all dimensions shown in inches)											
	P-CK				P-CL				P-CM			
	Min	Nom	Max	Note	Min	Nom	Max	Note	Min	Nom	Max	Note
A	.070	---	.165	7, 8	.070	---	.165	7, 8	.070	---	.165	7, 8
∅b	.0165	---	.0215	14	.0165	---	.0215	14	.0165	---	.0215	14
∅b1	.016	---	.020		.016	---	.020		.016	---	.020	
∅b2	---	---	.060	19	---	---	.060	19	---	---	.060	19
D	1.840	1.860	1.880	18	1.940	1.960	1.980	18	2.040	2.060	2.080	18
D1	1.700 BSC				1.800 BSC				1.900 BSC			
E	1.840	1.860	1.880	18	1.940	1.960	1.980	18	2.040	2.060	2.080	18
E1	1.700 BSC				1.800 BSC				1.900 BSC			
L	.120	---	.140		.120	---	.140		.120	---	.140	
Q	.040	---	.075	9, 11	.040	---	.075	9, 11	.040	---	.075	9, 11
Q1	.015	---	.075	9, 11	.015	---	.075	9, 11	.015	---	.075	9, 11
S	.000 BSC				.050 BSC				.000 BSC			
M		35		4		37		4		39		4
N			613	5			685	5			761	5
Notes	1, 2, 3, 6, 9, 16											

Symbol	Variations (all dimensions shown in millimeters)											
	P-CK				P-CL				P-CM			
	Min	Nom	Max	Note	Min	Nom	Max	Note	Min	Nom	Max	Note
A	1.78	---	4.19	7, 8	1.78	---	4.19	7, 8	1.78	---	4.19	7, 8
∅b	0.42	---	0.55	14	0.42	---	0.55	14	0.42	---	0.55	14
∅b1	0.41	---	0.51		0.41	---	0.51		0.41	---	0.51	
∅b2	---	---	1.52	19	---	---	1.52	19	---	---	1.52	19
D	46.74	47.24	47.75	18	49.28	49.78	50.29	18	51.82	52.32	52.83	18
D1	43.18 BSC				45.72 BSC				48.26 BSC			
E	46.74	47.24	47.75	18	49.28	49.78	50.29	18	51.82	52.32	52.83	18
E1	43.18 BSC				45.72 BSC				48.26 BSC			
L	3.05	---	3.56		3.05	---	3.56		3.05	---	3.56	
Q	1.02	---	1.91	9, 11	1.02	---	1.91	9, 11	1.02	---	1.91	9, 11
Q1	0.38	---	1.91	9, 11	0.38	---	1.91	9, 11	0.38	---	1.91	9, 11
S	.00 BSC				1.27 BSC				.00 BSC			
M		35		4		37		4		39		4
N			613	5			685	5			761	5
Notes	1, 2, 3, 6, 9, 16											

Symbol	Variations (all dimensions shown in inches)											
	P-CN				P-CP				P-CQ			
	Min	Nom	Max	Note	Min	Nom	Max	Note	Min	Nom	Max	Note
A	.070	---	.165	7, 8	.070	---	.165	7, 8	.070	---	.165	7, 8
∅b	.0165	---	.0215	14	.0165	---	.0215	14	.0165	---	.0215	14
∅b1	.016	---	.020		.016	---	.020		.016	---	.020	
∅b2	---	---	.060	19	---	---	.060	19	---	---	.060	19
D	2.140	2.160	2.180	18	2.340	2.360	2.380	18	2.640	2.660	2.680	18
D1	2.000 BSC				1.200 BSC				1.300 BSC			
E	2.140	2.160	2.180	18	2.340	2.360	2.380	18	2.640	2.660	2.680	18
E1	2.000 BSC				2.200 BSC				2.300 BSC			
L	.120	---	.140		.120	---	.140		.120	---	.140	
Q	.040	---	.075	9, 11	.040	---	.075	9, 11	.040	---	.075	9, 11
Q1	.015	---	.075	9, 11	.015	---	.075	9, 11	.015	---	.075	9, 11
S	.050 BSC				.000 BSC				.050 BSC			
M		41		4		45		4		51		4
N			841	5			1013	5			1301	5
Notes	1, 2, 3, 6, 9, 16											

Symbol	Variations (all dimensions shown in millimeters)											
	P-CN				P-CP				P-CQ			
	Min	Nom	Max	Note	Min	Nom	Max	Note	Min	Nom	Max	Note
A	1.78	---	4.19	7, 8	1.78	---	4.19	7, 8	1.78	---	4.19	7, 8
∅b	0.42	---	0.55	14	0.42	---	0.55	14	0.42	---	0.55	14
∅b1	0.41	---	0.51		0.41	---	0.51		0.41	---	0.51	
∅b2	---	---	1.52	19	---	---	1.52	19	---	---	1.52	19
D	54.36	54.86	55.37	18	59.44	59.94	60.45	18	67.06	67.56	68.07	18
D1	50.80 BSC				55.88 BSC				63.50 BSC			
E	54.36	54.86	55.37	18	59.44	59.94	60.45	18	67.06	67.56	68.07	18
D1	50.80 BSC				55.88 BSC				63.50 BSC			
L	3.05	---	3.56		3.05	---	3.56		3.05	---	3.56	
Q	1.02	---	1.91	9, 11	1.02	---	1.91	9, 11	1.02	---	1.91	9, 11
Q1	0.38	---	1.91	9, 11	0.38	---	1.91	9, 11	0.38	---	1.91	9, 11
S	1.27 BSC				.00 BSC				1.27 BSC			
M		41		4		45		4		51		4
N			841	5			1013	5			1301	5
Notes	1, 2, 3, 6, 9, 16											

NOTES:

1. See table VI for descriptive type designator.
2. Refer to 3.1.25 herein which lists and defines dimensioning symbols.
3. Terminal position designation shall be in accordance with style requirement 111, note 16 herein.
4. “M” represents the pin matrix size.
5. “N” represents the maximum allowable number of pins.
6. Twenty-three by twenty-three matrix sizes are shown for illustration only.
7. Dimension “A” includes the package body and lid for both cavity up and down configurations (see reference drawing).
8. Dimension “A” does not include integral heatsink or attached features.
9. Standoffs should be located on the pin matrix diagonals.
10. The seating plane is the outer standoff surface facing away from the ceramic body.
11. Dimension “Q” applies to cavity up configuration only. Dimension “Q1” applies to cavity down configuration only (see reference drawing).
12. “S” is measured with respect to datum A and datum B and defines the position of the center pin in the outer row, when there is an odd number of pins in the outer row, “S” = .000 inch, when an even number are used, “S” = .050 inch (1.27 mm). All pins in a given row must be on a .100 inch (2.54 mm) grid. Adjacent rows offset by .050 inch (1.27 mm).
13. Datum C is the plane of pin to package interface for both cavity up and down configurations (see reference drawing).
14. Pin diameter includes solder dip or custom finishes.
15. Pin tips shall have a radius or chamfer.
16. There must be some type of A1 corner identification on both top and bottom surfaces of the package. ID type is optional and may consist of notches, ID pins, metallized markings or other features. The features used on each surface may be of differing types.
17. There must be .010 inch (0.254 mm) minimum spacing between any two metallized features on the package.
18. Dimension “D” and “E” do not include ceramic protrusions. Such protrusions may not exceed more than .003 inch (0.076 mm) on any side. Corners of the package body may have chamfers for mechanical protection or identification.
19. This dimension defines the maximum size for the braze pads, pins must be positioned entirely on the braze pads.

REQUIREMENT 117A

DUAL FLAT PACK STYLE WITH GULLWING LEADS

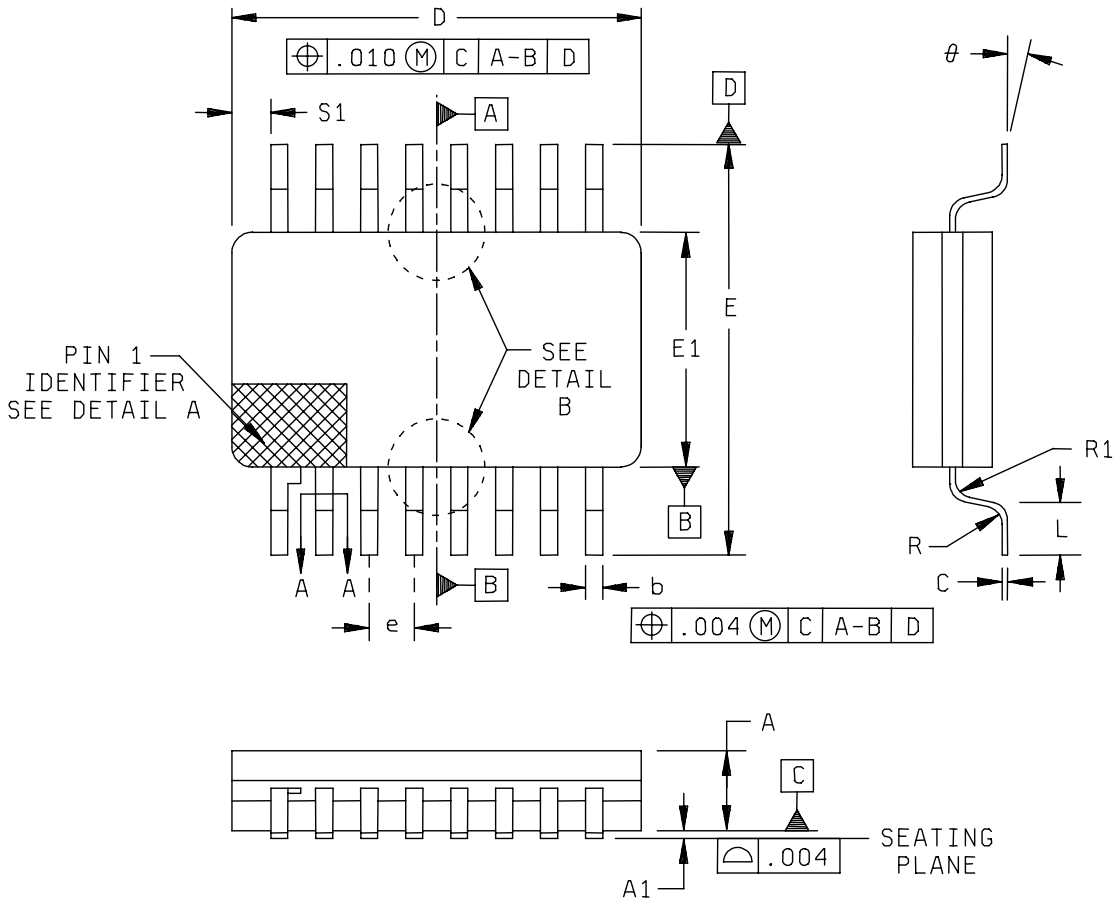

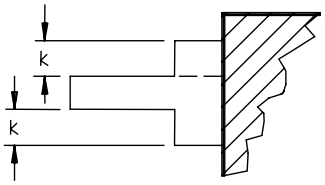

DETAIL A

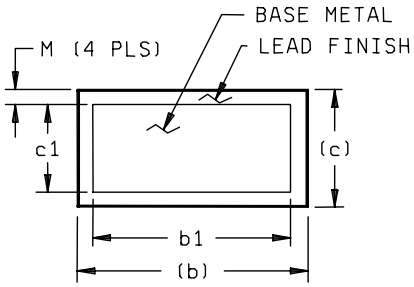

SECTION A-A

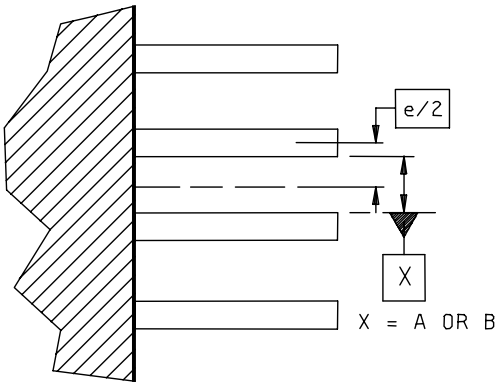

EVEN NUMBER OF LEADS PER SIDE

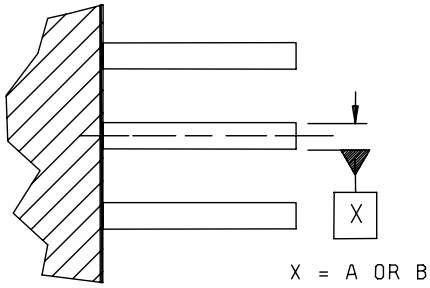

ODD NUMBER OF LEADS PER SIDE

DETAIL B

Symbol	Variations (all dimensions shown in inches)							
	FG-1				FG-2			
	Min	Nom	Max	Note	Min	Nom	Max	Note
A	.050	---	.080		.050	---	.080	
A1	.004	---	.012		.004	---	.012	
b	.015	---	.022		.015	---	.022	
b1	.015	.017	.019	4	.015	.017	.019	4
c	.004	.006	.009		.004	.006	.009	
c1	.004	.005	.006	4	.004	.005	.006	4
D	.235	.240	.280	3	.370	.390	.405	3
E	.400	.410	.420		.400	.410	.420	
E1	.235	.240	.260	3	.245	.250	.270	3
e	.050 BSC				.050 BSC			
k	.008	---	.015	1, 2	.008	---	.015	1, 2
L	.037	.040	.043		.037	.040	.043	
R	.013	.015	.017		.013	.015	.017	
R1	.013	.015	.017		.013	.015	.017	
S1	.005	---	---	7	.005	---	---	7
θ	0°	---	7°		0°	---	7°	
M	---	---	.0015	4	---	---	.0015	4
N	10			5	14			5
Note	6							

Symbol	Variations (all dimensions shown in millimeters)							
	FG-1				FG-2			
	Min	Nom	Max	Note	Min	Nom	Max	Note
A	1.27	---	2.03		1.27	---	2.03	
A1	0.10	---	0.30		0.10	---	0.30	
b	0.38	---	0.56		0.38	---	0.56	
b1	0.38	0.43	0.48	4	0.38	0.43	0.48	4
c	0.10	0.15	0.23		0.10	0.15	0.23	
c1	0.10	0.13	0.15	4	0.10	0.13	0.15	4
D	5.97	6.10	7.11	3	9.40	9.91	10.29	3
E	10.16	10.41	10.67		10.16	10.41	10.67	
E1	5.97	6.10	6.60	3	6.22	6.35	6.86	3
e	1.27 BSC				1.27 BSC			
k	0.20	---	0.38	1, 2	0.20	---	0.38	1, 2
L	0.94	1.02	1.09		0.94	1.02	1.09	
R	0.33	0.38	0.43		0.33	0.38	0.43	
R1	0.33	0.38	0.43		0.33	0.38	0.43	
S1	0.13	---	---	7	0.13	---	---	7
θ	0°	---	7°		0°	---	7°	
M	---	---	0.04	4	---	---	0.04	4
N	10			5	14			5
Note	6							

Symbol	Variations (all dimensions shown in inches)							
	FG-3				FG-4			
	Min	Nom	Max	Note	Min	Nom	Max	Note
A	.050	---	.080		.060	---	.090	
A1	.004	---	.012		.004	---	.012	
b	.015	---	.022		.015	---	.022	
b1	.015	.017	.019	4	.015	.017	.019	4
c	.004	.006	.009		.004	.006	.009	
c1	.004	.005	.006	4	.004	.005	.006	4
D	.370	.390	.405	3	.495	.500	.540	3
E	.400	.410	.420		.400	.410	.420	
E1	.245	.265	.285	3	.260	.265	.285	3
e	.050 BSC				.050 BSC			
k	.008	---	.015	1, 2	.008	---	.015	1, 2
L	.037	.040	.043		.037	.040	.043	
R	.013	.015	.017		.013	.015	.017	
R1	.013	.015	.017		.013	.015	.017	
S1	.005	---	---	7	.005	---	---	7
θ	0°	---	7°		0°	---	7°	
M	---	---	.0015	4	---	---	.0015	4
N	16			5	20			5
Note	6							

Symbol	Variations (all dimensions shown in millimeters)							
	FG-3				FG-4			
	Min	Nom	Max	Note	Min	Nom	Max	Note
A	1.27	---	2.03		1.53	---	2.29	
A1	0.10	---	0.30		0.10	---	0.30	
b	0.38	---	0.56		0.38	---	0.56	
b1	0.38	0.43	0.48	4	0.38	0.43	0.48	4
c	0.10	0.15	0.23		0.10	0.15	0.23	
c1	0.10	0.13	0.15	4	0.10	0.13	0.15	4
D	9.40	9.91	10.29	3	12.57	12.70	13.72	3
E	10.16	10.41	10.67		10.16	10.41	10.67	
E1	6.22	6.73	7.24	3	6.61	6.73	7.24	3
e	1.27 BSC				1.27 BSC			
k	0.20	---	0.38	1, 2	0.20	---	0.38	1, 2
L	0.94	1.02	1.09		0.94	1.02	1.09	
R	0.33	0.38	0.43		0.33	0.38	0.43	
R1	0.33	0.38	0.43		0.33	0.38	0.43	
S1	0.13	---	---	7	0.13	---	---	7
θ	0°	---	7°		0°	---	7°	
M	---	---	0.04	4	---	---	0.04	4
N	16			5	20			5
Note	6							

NOTES:

1. Index area; A notch or a pin one identification mark shall be located adjacent to pin on and shall be located within the shaded area shown. The manufacturer's identification shall not be used as a pin one identification mark. Alternately, a tab (dimension k) may be used to identify pin one. This tab may be located on either side of terminal one as shown in detail A.
2. If a pin one identification mark is used in addition to a tab, the limits of dimension k do not apply.
3. This dimension allows for off-center lid, meniscus, and glass overrun.
4. Dimensions b1 and c1 apply to lead base metal only. Dimension M applies to lead plating and finish thickness. The maximum limits of lead dimensions b and c or M shall be measured at the centroid of the finished lead surface, when solder dip or tin plate lead finish is applied.
5. N is the maximum number of terminal positions.
6. See tables VI and VII for descriptive type designators.
7. Measure dimension S1 at all four corners, see 5.2.5. There is an alternative minimum limit to dimension S1, see 5.2.2.

This page intentionally blank

REQUIREMENT 118A

BOTTOM TERMINAL CHIP CARRIER

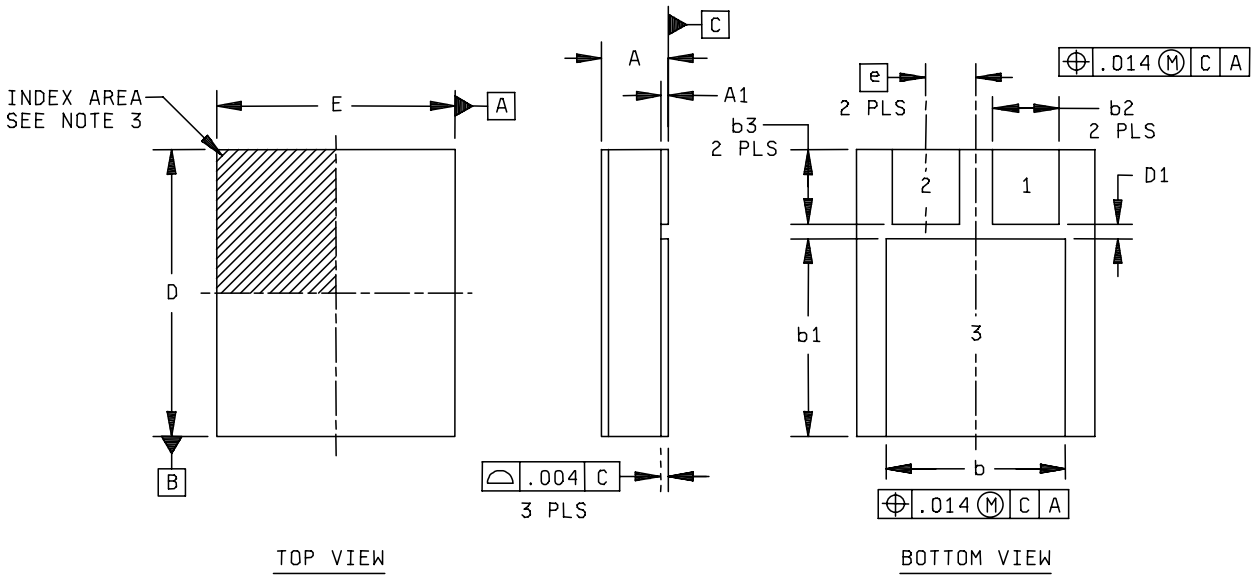

Symbol	Variation						Notes
	C-B1 (inches)			C-B1 (millimeters)			
	Min	Nom	Max	Min	Nom	Max	
A	.112	.118	.124	2.84	3.00	3.15	1
A1	.010	.015	.020	0.25	0.38	0.51	
b	.281	.286	.291	7.13	7.26	7.39	
b1	.220	.225	.230	5.58	5.72	5.84	
b2	.090	.095	.100	2.28	2.41	2.54	
b3	.115	.120	.125	2.92	3.05	3.18	
D	.395	.400	.405	10.03	10.16	10.28	
D1	.030	----	----	0.76	----	----	
E	.291	.296	.301	7.39	7.52	7.64	
e	.075 BSC			1.91 BSC			
Notes	2						

Symbol	Variation						Note
	C-B2 (inches)			C-B2 (millimeters)			
	Min	Nom	Max	Min	Nom	Max	
A	.130	.136	.142	3.30	3.45	3.61	1
A1	.010	.015	.020	0.25	0.38	0.51	
b	.370	.375	.380	9.40	9.53	9.65	
b1	.410	.415	.420	10.41	10.54	10.67	
b2	.135	.140	.145	3.43	3.56	3.68	
b3	.152	.157	.162	3.86	3.99	4.11	
D	.620	.625	.630	15.75	15.88	16.00	
D1	.030	----	----	0.76	----	----	
E	.445	.450	.455	11.30	11.43	11.56	
e	.105 BSC			2.67 BSC			
Note	2						

Symbol	Variation						Note
	C-B3 (inches)			C-B3 (millimeters)			
	Min	Nom	Max	Min	Nom	Max	
A	.130	.136	.142	3.30	3.45	3.61	1
A1	.010	.015	.020	0.25	0.38	0.51	
b	.435	.440	.445	11.05	11.18	11.30	
b1	.470	.475	.480	11.94	12.07	12.19	
b2	.135	.140	.145	3.43	3.56	3.68	
b3	.152	.157	.162	3.86	3.99	4.11	
D	.685	.690	.695	17.40	17.53	17.65	
D1	.035	----	----	0.89	----	----	
E	.520	.525	.530	13.20	13.34	13.46	
e	.120 BSC			3.05 BSC			
Note	2						

NOTES:

1. Measurement prior to solder coating the mounting pads on bottom of package.
2. See table VI for descriptive type designators.
3. The terminal #1 identifier must be located within the zone indicated. Details of terminal #1 identifier are optional.

REQUIREMENT 119

SINGLE ROW FLANGE MOUNT STYLE

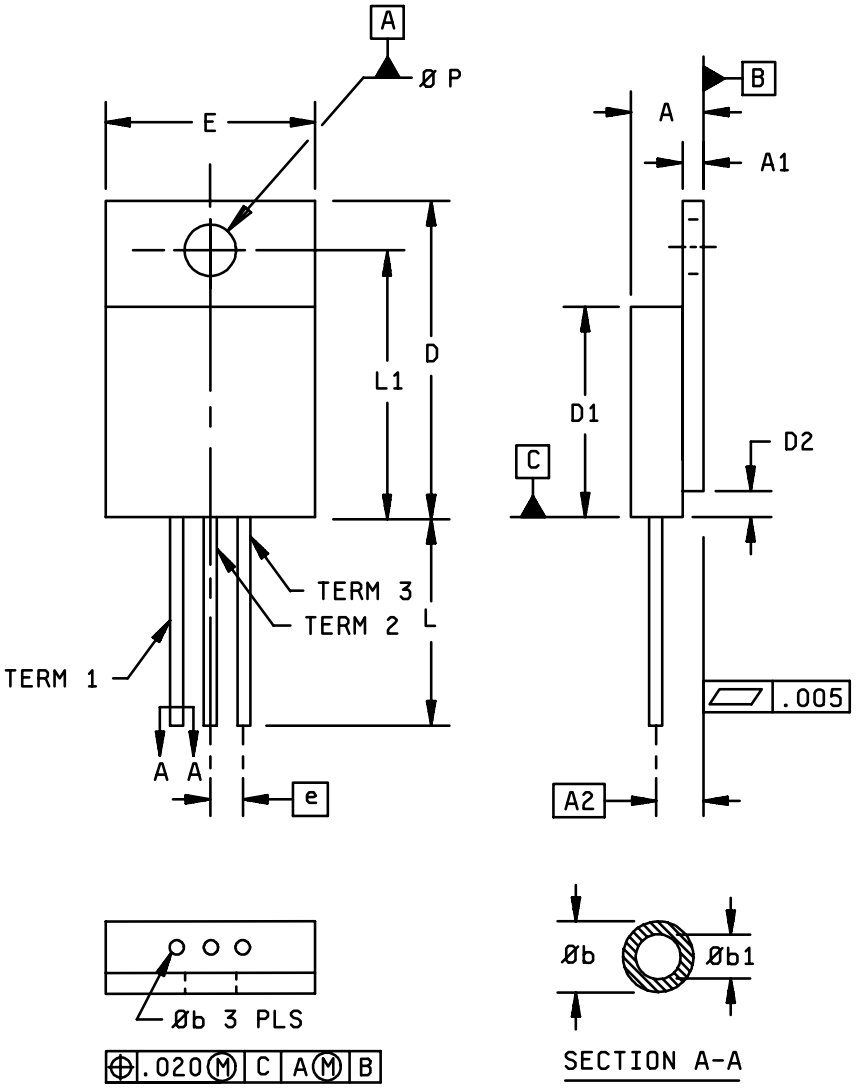

Symbol	Variation						Notes
	AA (inches)			AA (millimeters)			
	Min	Nom	Max	Min	Nom	Max	
A	.190	.195	.200	4.83	4.95	5.08	
A1	.035	.040	.045	0.89	1.02	1.14	
A2	.120 BSC			3.05 BSC			
∅b	.025		.040	0.64		1.02	1, 2
∅b1	.025	.030	.035	0.64	0.76	0.89	1, 2
D	.645	.655	.665	16.38	16.64	16.89	
D1	.410	.420	.430	10.41	10.67	10.92	
D2	----	----	.038	----	----	0.97	
e	.100 BSC			2.54 BSC			
E	.410	.415	.420	10.41	10.54	10.67	
L	.500	.625	.750	12.70	15.88	19.05	
L1	.527	.532	.537	13.39	13.51	13.64	
∅P	.140	.145	.150	3.56	3.68	3.81	
Notes	3, 4						

Symbol	Variation						Notes
	BB (inches)			BB (millimeters)			
	Min	Nom	Max	Min	Nom	Max	
A	.249	.255	.260	6.32	6.48	6.60	
A1	.040	.045	.050	1.02	1.14	1.27	
A2	.150 BSC			3.81 BSC			
∅b	.035		.050	0.89		1.27	1, 2
∅b1	.035	.040	.045	0.89	1.02	1.14	1, 2
D	.790	.795	.800	20.07	20.19	20.32	
D1	.535	.540	.545	13.59	13.72	13.84	
D2			.				
e	.150 BSC			3.81 BSC			
E	.535	.540	.545	13.59	13.72	13.84	
L	.530	.540	.550	13.46	13.72	13.97	
L1	.665	.675	.685	16.89	17.15	17.40	
∅P	.139	.144	.149	3.53	3.66	3.78	
Notes	3, 4						

Symbol	Variation						Notes
	CC (inches)			CC (millimeters)			
	Min	Nom	Max	Min	Nom	Max	
A	.240	.255	.270	6.10	6.48	6.86	
A1	.035	.040	.045	0.89	1.02	1.14	
A2	.140 BSC			3.56 BSC			
∅b	.055		.070	1.40		1.78	1, 2
∅b1	.055	.060	.065	1.40	1.52	1.65	1, 2
D	.815	.825	.835	20.70	20.96	21.21	
D1	.530	.540	.550	13.46	13.72	13.97	
D2	----	----	.092	----	----	2.34	
e	.200 BSC			5.08 BSC			
E	.685	.690	.695	17.40	17.53	17.65	
L	.500	.625	.750	12.70	15.88	19.05	
L1	.697	.702	.707	17.70	17.83	17.96	
∅P	.155	.160	.165	3.94	4.06	4.19	
Notes	3, 4						

NOTES:

1. Dimension ∅b1 applies to base metal only. Dimension ∅b applies to plated part.
2. Section A-A dimensions apply between .100 inch (2.54 mm) to .150 inches (3.81 mm) from lead tip.
3. Pointed or rounded lead tips are preferred to ease insertion.
4. Methods used for electrical isolation of the terminal feed through shall employ materials that contain a minimum of 90 percent AL_2O_3 (ceramic).
5. See table VI for descriptive type designators.