METRIC

MIL-STD-1678-2A
W/Change 1
7 January 2022
SUPERSEDING
MIL-STD-1678-2A
4 November 2013

DEPARTMENT OF DEFENSE
STANDARD PRACTICE

FIBER OPTIC CABLING SYSTEMS REQUIREMENTS AND MEASUREMENTS

(Part 2: OPTICAL MEASUREMENTS)

(PART 2 OF 6 PARTS)

AMSC N/A

FSC 60GP

DISTRIBUTION STATEMENT A. Approved for public release; distribution is unlimited.

FOREWORD

1. This Department of Defense Standard Practice is approved for use by the DLA Land and Maritime, Defense Logistics Agency, and is available for use by all Departments and Agencies of the Department of Defense.

2. Comments, suggestions or questions on this document should be addressed to DLA Land and Maritime, ATTN: VAT, Post Office Box 3990, Columbus, OH 43218-3990, or emailed to FiberOpticGroup@dla.mil. Since contact information can change, you may want to verify the currency of this address information using the ASSIST Online database at https://assist.dla.mil.

3. This standard practice provides detailed information and guidance to personnel concerned with ensuring standardization of fiber optic cable topologies (optical fiber cabling and associated components) on military mobile vehicles used in air, land, and sea applications. In general, the requirements and methods specified herein are not identifiable to any specific mobile vehicle class or type, but are intended to standardize and minimize variations in requirements, test setups, test measurement procedures, test sample fabrication configurations, and other aspects that must be addressed for completeness. Where specified, constrains for usage or platform types will be listed. The term "platform" will be used to refer to the military mobile vehicles in general or, where designated, one particular class (such as "aircraft platform") or one particular type within that class (such as "F-35").

4. In order to provide flexibility in the use and update of the different aspects for requirements and methods, this standard practice is issued in five parts as follows:

Part 1: Design, installation and maintenance requirements. This part addresses design requirements for platforms that use cable harnesses as the means to transport data through optical fiber among communication network and end user equipment. Larger platforms excluding surface ships and submarines that route trunk cables through cableways and drop cables to the end user (application equipment), can cite applicable requirements in Part 1 of the Standard Practice and augment them with use of MIL-HDBK-2051, MIL-STD-2052 and MIL-STD-2042 in lieu of Part 1 of this Standard Practice for all fiber optic applications with the exception of Personnel Proficiency. For Personnel Proficiency, Surface ships and submarines, are to use are to use Navy shipboard and application training requirements in requirement 1306 of this Standard Practice.

Part 2 Optical measurements. Part 2 of this standard practice addresses further details to refine or bound (constrain) the performance of each optical test measurement addressed. The test methods, such as those in a TIA-455 series standard or military standard/specification, are cited herein. This part of the standard practice augments the test method in the standard or specification to ensure consistency with setup and measurement procedure. This consistency minimizes variations when comparing data obtained from different test laboratories (including commercial, vendor, Government and Government contractor).

Part 3 Physical, mechanical, environmental and material measurements. Part 3 of this standard practice addresses further details to refine or bound (constrain) the performance of each physical, mechanical, environmental and material test measurement or inspection addressed. The test methods, such as those in a TIA-455 series standard or military standard/specification, are cited herein. This part of the standard practice augments the test method to ensure consistency with setup, measurement procedure, data recording/analysis and other factors critical to conducting or evaluating test performance. This consistency minimizes variations when comparing data obtained from different test laboratories (including commercial, vendor, Government and Government contractor).

Part 4 Test sample configuration and fabrication requirements. Part 4 of this standard practice addresses further details to refine or bound (constrain) the configuration and fabrication of test samples for the fiber optic components addressed. Fabrication methods, such as those in the Shipboard installation standard, MIL-STD-2042, or in the general series aircraft maintainer's manual, NAVAIR 01-1A-505-4/TO 1-1A-14-1, are cited herein. This part of the standard practice augments the fabrication method to ensure consistency with use of the same components (such as cable types) and processes and augments the component specification to ensure consistency of the test sample configuration.

Part 5 Design phase, supplemental and legacy measurements. Design phase, supplemental and legacy measurements. Tests that are more unique to the design phase or tests and inspections that are not just primarily for qualification (supplemental measurements) are addressed in Part 5 of this standard practice. Prequels in other parts of this standard practice contained other variants that are now excluded. These variants are now retained for informational purposes in Part 5. Also, Part 5 addresses some test methods cited in former DOD-STD-1678. The test methods cited in DOD-STD-1678 are considered obsolete; however, a few military specifications and commercial standards still refer to some of the test methods. These test methods are provided in this part of the standard with the recommended replacement method. These former DOD-STD-1678 test methods are listed under the constraint that they be used only with the specific military specifications or commercial standards in which they are cited. The intent is to delete each DOD-STD-1678 test method from that standard practice in Part 5 once its reference from military specification or commercial standard is removed.

Part 6 Parts and support equipment commonality and standardization requirements. This part of the Standard Practice addresses component part and support equipment standardization requirements for platforms that transport data through optical fiber among communication network and end user equipment. Surface ships and submarines are to use the Navy Shipboard Fiber Optic Recommended Components Parts List in addition to part 6 of this Standard Practice. Likewise, larger platforms that route trunk cables through cableways and drop cables to the end user (application equipment), can cite applicable requirements in Part 6 of the Standard Practice, cite the Navy shipboard Fiber Optic Recommended Components Parts List with the test equipment list and tool list, or both, as appropriate. The Navy Shipboard Fiber Optic Recommended Components Parts List can be obtained at the Navy Shipboard fiber optic website. Due to the dynamic nature of web addresses, the current website URL can be obtained by e-mailing DLGR_NSWC_FOWEB@navy.mil with the subject line "WEBSITE URL REQUEST". An automated reply will contain the current web address. For surface ships and submarines, where there is conflict between the cited documents on the Web Site and Part 6 of this Standard Practice, the three documents on the Web Site shall take precedence.

CONTENTS

PARAGRAPH		PAGE
1.	SCOPE	1
1.1	Scope	1
1.1.1	Applicability	1
1.2	Intended uses for Part 2	1
1.2.1	Primary uses of Part 2	1
1.2.2	Supplemental use	1
1.2.3	Use for content	1
1.2.4	Constraints on use	1
1.3	Measurement numbering system	1
1.3.1	Measurement series	1
1.3.2	Revision to a measurement	2
1.3.2.1	Revision designators to Part 2 Revision A	2
1.4	Method of referencing a Measurement	2
2.	APPLICABLE DOCUMENTS	2
2.1	General	2
2.2	Government documents	2
2.2.1	Other Government documents	2
2.3	Non-Government documents	3
2.4	Order of precedence	3
3.	DEFINITIONS	3
3.1	General fiber optics terms	3
3.2	Acronyms	3
3.3	Use of term insertion loss versus the term change in optical transmittance	3
3.3.1	Insertion loss	3
3.3.2	Change in optical transmittance	4
3.4	Use of term monitor fiber versus the term reference fiber	4
3.4.1	Monitor fiber	4
3.4.2	Reference fiber	4
3.4.3	Optical discontinuity	4
4.	GENERAL REQUIREMENTS	4
4.1	Test sample configurations	4
4.1.1	Connectors and splices	4
4.1.2	Optical fiber and cable	4
4.2	Environmental conditions	4
4.3	Vendor minimum inspection responsibilities	5
4.4	Test conditions	5
4.4.1	Connection type at instrument optical port	5
4.4.2	Test setup cable routing to minimize macro bends and micro bends	5
4.4.3	Test interruption	5
4.4.4	Environmental chamber test charts	5
4.4.5	Multiple channel optical monitoring	5
4.4.6	Recording and verifying pass/fail criteria	6
4.5	Laser and fiber optic safety compliance	6
4.5.1	Laser safety precautions	6
4.5.2	Fiber optic safety precautions	7
4.6	Operating wavelength	7
4.6.1	Default	7
4.6.2	Default, shipboard	7
4.7	Consensus for optical performance measurements	7
4.8	Use the prescription approach cited	8
4.8.1	Launch conditions	8
4.8.2	Change in optical transmittance	8
4.8.3	Insertion loss	8
4.9	Inspection by attributes	8

PARAGRAPH		PAGE
5.	DETAILED REQUIREMENTS	8
5.1	Optical measurements	8
5.1.1	Insertion loss	8
5.1.2	Change in optical transmittance	8
5.1.3	Optical crosstalk	8
5.1.4	Optical signal discontinuity	8
5.1.5	Optical return loss	8
5.1.6	Attenuation rate	8
5.2	Support processes for optical measurements	8
5.2.1	Test procedures	8
5.2.2	Optical test instrumentation	8
5.2.3	Launch conditions	8
5.2.4	Rectangular backplane connector engagement and test fixtures	8
6.	NOTES	9
6.1	Intended use	9
6.2	Acquisition requirements	9
6.3	Subject term (key word) listing	9
6.4	Change notations	9
6.5	Supersession data	9
MEASUREMENTS		
Optical measurements		
2101	Insertion loss	11
2102	Change in optical transmittance	27
2103	Optical crosstalk	43
2104	Optical signal discontinuity	54
2105	Optical return loss	64
2106	Attenuation rate	77
Support processes for optical measurements		
2201	Test procedures	96
2202	Optical test instrumentation	101
2203	Launch conditions	109
2204	Rectangular backplane connector engagement and test fixtures	118

1. SCOPE

1.1 Scope. Part 2 of this standard practice provides further details to refine or bound (constrict) the performance of each optical test measurement addressed.

1.1.1 Applicability. The test methods, such as those in a TIA-455 series standard or military standard/specification, are cited already. This part of the standard practice augments the test method in the TIA-455 series standard or military standard/ specification to ensure consistency with setup and measurement procedure. This consistency minimizes variations when comparing data obtained from different test laboratories (including commercial, vendor, Government, and Government contractor). The rapidly changing state of the art in fiber optic technology makes it essential that some degree of flexibility be exercised in enforcing this document. When there is a conflict between this document and the platform specification or contract, the platform specification or contract will take precedence. Where obsolescence or other issues are such that the measurement requirements specified for the refinement or bound (constraint) herein cannot be implemented, users will submit a description of the issue along with a request for clarification or with proposal for redefining the requirement to consider for incorporation into this standard practice to: DLA Land and Maritime, ATTN: VAT, Post Office Box 3990, Columbus, OH 43218-3990, or emailed to FiberOpticGroup@dla.mil .

1.2 Intended uses for Part 2.

1.2.1 Primary uses of Part 2. Part 2 of this standard practice was prepared primarily for qualification functions performed by Government Personnel (including Government contractors acting on behalf of the Government) as specified in 1.2.1.1 through 1.2.1.3

1.2.1.1 Auditing. Use for performing audits of test laboratories doing testing for fiber optic cable topology (FOCT) components.

1.2.1.2 Test procedure review. Use to review optical test procedures for a FOCT component.

1.2.1.3 Test report review. Use to review the optical testing performance as part of a test report for a FOCT component.

1.2.2 Supplemental use. Part 2 of this standard practice is intended to identify to vendors and test laboratories the areas of emphasis for Government review for optical test measurements performed as part of a FOCT component qualification process.

1.2.3 Use for content. Each optical measurement contains the test methodology and performance requirements in a narrative format. Checklists are included that contain primary requirements in a table format. Further clarification of the items in the table can be found in applicable optical measurement.

1.2.4 Constraints on use.

a. Part 2 of this standard practice is not intended as a tutorial. There are significant differences in Government mandated optical tests versus performance in some parts of the commercial sector. Commercial entities are expected to be familiar with the test standards cited by the Government for use. Part 2 of this standard practice does provide some guidance and clarifications for successful implementation within the test standards cited.

b. Part 2 of this standard practice is not intended to be used in lieu of a test laboratory developing optical test procedures specific to their test instrumentation.

1.3 Measurement numbering system. The Measurements in Part 2 of this Standard Practice are designated by numbers assigned in accordance with the following system:

1.3.1 Measurement series. The Measurements are divided into two series: Measurements in the 2100 series, numbered 2101 to 2199 inclusive, cover optical measurements; and those in the 2200 series, numbered 2201 to 2299 inclusive, cover support processes for optical measurements. Within each series, Measurements are serially numbered in the order in which they are introduced into this standard.

1.3.2 Revision to a Measurement. Revisions to Measurements are indicated by a decimal point then number (i.e., the revision designator) following the Measurement number. For example, the original number assigned to the measurement for Insertion Loss is 2101; the first revision of that method is 2101.1, the second revision, 2102.2, etc.

1.3.2.1 Revision designators to Part 2 Revision A. Revision designators were not used initially or at all after the Measurement number up to and including Part 2 Revision A. Table I is provided to show when revisions were made to each Measurement from the Base document of Part 2 to Revision A.

1.4 Method of referencing a Measurement. When applicable, each Measurement contained herein should be referenced in the individual specification by specifying this standard (i.e., Standard Practice), the Measurement number, and, if applicable, specific details cited in the referenced Measurement. To avoid the necessity for changing specifications which refer to this standard, the revision designator (decimal point followed by a number) after the Measurement number should not be used when referencing the Measurement. For example, use "Measurement 2101", not "Measurement 2101.2.

TABLE I. Revision to Measurements for Part 2 from Base to Revision D with Change 2.

Measurement Number	Revisions to Base	Measurements Ch1	from Base to Ch2	Revision A Rev A
2101	New	.1	.2	
2102	New	.1		
2103	New	.1		
2104	New	.1	.2	.3
2105	New	.1	.2	
2106	New	.1	.2	
2201	New			
2202	New	.1		
2203	New	.1		

2. APPLICABLE DOCUMENTS

2.1 General. The documents listed in this section are specified in sections 3, 4, and 5 of this standard practice. This section does not include documents cited in other sections of this standard practice or recommended for additional information or as examples. While every effort has been made to ensure the completeness of this list, document users are cautioned that they must meet all specified requirements of documents cited in sections 3, 4, and 5 of this standard practice, whether or not they are listed.

2.2 Government documents.

2.2.1 Other Government documents, drawings, and publications. The following other Government documents, drawings, and publications form a part of this standard practice to the extent specified herein. Unless otherwise specified, the issues are these documents are those cited in the solicitation or contract.

NAVAIR 01-1A-505-4/ T.O. 1-1A-14-4/ TM 1-1500-323-24-4 — Aircraft Fiber Optic Cabling, Technical Manual, Installation and Testing Practices.

(A copy of this document is available online at: https://jswag.navair.navy.mil. At the home page select "Document Library" (on left side), then select the "Committee" folder, then "JFOWG" followed by the "Maintenance Documents" folder. If unable to access this Web Site, request an application by e-mail to NSWC DD Warfare Systems Department at: (DLGR_NSWC_Foweb@navy.mil.)

2.3 Non-Government publications. The following documents form a part of this document to the extent specified herein. Unless otherwise specified, the issues of these documents are cited in the solicitation or contract.

AMERICAN NATIONAL STANDARDS INSTITUTE

LIA Z136.2	-	Safe Use of Optical Fiber Communication Systems Utilizing Laser Diode and LED Sources.

(Copies are available from http://www.ansi.org or the American National Standards Institute, 1430 Broadway, New York, NY 10018-3308.)

TELECOMMUNICATIONS INDUSTRY ASSOCIATION

TIA440	-	Fiber Optic Terminology.
TIA455	-	Fiber Optic Fibers, Cables, Transducers, Sensors, Connecting and Termination Devices and Other Fiber Components.
TIA455.20	-	Measurements of Change in Optical Transmittance.
TIA526.14	-	Fiber Optic Power Loss Measurements of Installed Multimode Cable Plant.

(Copies are available online at http://www.tiaonline.org/standards/catalog/index.cfm or from TIA, 2500 Wilson Boulevard, Suite 300, Arlington, VA 22201, USA, ATTN: Standards Department.)

2.4 Order of precedence. Unless otherwise noted herein or in the contract, in the event of a conflict between the text of this document and the references cited herein, the text of this document takes precedence. Nothing in this document, however, supersedes applicable laws and regulations unless a specific exemption has been obtained.

3. DEFINITIONS

3.1 General fiber optics terms. Definitions for general fiber optics terms used in this standard practice are in accordance with TIA440. Definitions for other terms as they are used in this standard practice are given in the following paragraphs.

3.2 Acronyms. The following acronyms are used in this standard practice:

DUT	Device under test.
FOCT	Fiber optic cable topology.

3.3 Use of term insertion loss versus the term change in optical transmittance. The correct terminology must be used and the proper measurement must be performed.

3.3.1 Insertion loss. This test is performed when there is the requirement to take a measurement relative to that of the uncut cable. The uncut cable measurement acts as the baseline measurement. The test method to be used may be one of the following variations:

a. Original insertion method. Cut the cable, insert the component/DUT and take the measurements relative to a baseline measurement of the uncut cable.

b. Cut-back method. Take the DUT measurement then perform a cut-back of the cable between the source and the DUT. Place the cut-back pigtail into a bare fiber adapter and obtain the baseline measurement. A wide area detector must be used for power meter measurements when using this variation.

c. Simulated cut-back method. Take the DUT measurement then perform a simulated cut-back of the cable between the source and the DUT. The simulated cut-back is performed by disconnecting the DUT and placing the source end of the DUT directly into the power meter to obtain the baseline measurement. A wide area detector must be used for power meter measurements when using this variation.

No other methods, such as cable assembly loss methods A, B, or C in accordance with TIA526.14, are acceptable for performing this test. No fusion splicing of already constructed cable assemblies is permitted. No disconnection of the source end of the test sample from the source is permitted during this test.

3.3.2 Change in optical transmittance. This test is performed when there is the requirement to take the measurements during, during and after, or after the test relative to a pre-test measurement. The pre-test measurement acts as the baseline measurement.

3.4 Use of term monitor fiber versus the term reference fiber. The correct terminology must be used and the proper fiber, if required, employed in the measurement.

3.4.1 Monitor fiber.

a. Definition. A monitor fiber is used to compensate for instability in the optical source (in accordance with TIA455.20).

b. Compliance. A monitor fiber is required unless it can be verified that the stability of the optical source is sufficient to obtain the specified measurement accuracy over the duration of the test. The stability of most optical sources are specified in dB/hr or dB/8 hr, whereas, some tests, especially environmental, are weeks in duration.

3.4.2 Reference fiber.

a. Definition. The reference fiber is one that goes through environmental/mechanical testing. The distinction of the reference fiber is that no DUT has been inserted into the middle of the fiber length. The reference fiber is the same fiber type and cable construction as the other channels in which a DUT was inserted. The reference fiber is to be placed in close proximity to the cable with the DUT inserted. This standard practice uses the term reference fiber. Other terms include reference lead and reference specimen.

b. Compliance. Unless required for a particular test, the use of a reference fiber is optional.

3.4.3 Optical discontinuity. A reduction in the optical transmittance below the minimum specified level for a time interval beyond the specified duration. A discontinuity is considered to occur for any further optical power level reduction, for any duration beyond the maximum allowed duration, or for a combination of these two criteria.

4. GENERAL REQUIREMENTS

4.1 Test sample configurations.

4.1.1 Connectors and splices. Cable assembly configuration normally consists of 10 meters of cable with the DUT in the middle (at 5 meters) and single ferrule connectors on the ends to mate with the optical instrumentation. For insertion loss tests on multiple termini connectors where a cut-back must be done, a 13 meter length of cable is used with the DUT placed 8 meters from the launch end of the cable. This allows 3 cut-backs to be performed, each cut-back being one meter long. If a specific mechanical or environmental test requires longer lengths to reach optical measurement instrumentation, added test jumpers may be used after receipt of Government approval.

4.1.2 Optical fiber and cable. DUT lengths are generally over 1,000 meters for optical fiber and 500 meters for fiber optic cable. These lengths are required to permit sufficient optical measurement resolution for deviations in optical performance during testing. Some mechanical and environmental tests permit cutting the DUT into multiple sections for testing. Mechanical tests are mostly performed on short lengths (usually less than 10 meters) and environmental tests on longer lengths (150 to 500 meters for fiber optic cable, over 1,000 meters for optical fiber). Due to these different lengths, the optical transmittance measurements (for change in optical transmittance) are done in dB for mechanical tests and in dB/km for environmental tests.

4.2. Environmental conditions. Test equipment to perform the optical test measurements must be placed in an area in which specified ambient temperature and humidity conditions are maintained. “Standard Ambient” conditions (23°C ± 5ºC/73°F ± 9ºF and 20 to 70 percent RH), in accordance with TIA455, is acceptable if the test equipment is built to operate throughout that ambient temperature and humidity range and is within the specified accuracy. If not, then the “Controlled Ambient” conditions (23°C ± 2ºC/73°F ± 4ºF and 45 to 55 percent RH) are to be followed. For uncontrolled spaces where local weather is normally within the “Standard Ambient” range (or the specified test equipment operating ambient conditions, whichever is more conservative), testing shall be performed only when the acceptable conditions exist.

4.3 Vendor minimum inspection responsibilities. When the vendor has in house capabilities to perform Group A inspections, the vendor is encouraged to do the initial qualification inspections that are also listed under Group A inspections. When the initial qualification is performed outside the vendor's facility, the vendor should submit the results of the Group A inspections to the outside test laboratory for inclusion as part of the initial qualification report.

4.4 Test conditions.

4.4.1 Connection type at instrument optical port.

4.4.1.1 Optical interface connections. Different types of connections may be used to join the optical path and mechanically affix the connection for the cable assembly under test to the instrument optical ports. Instruments include optical sources, detectors and switches.

4.4.1.2 Preferred type. It is recommended that there be a direct connection at the instrument optical port. Bare fiber adapters, fusion splices and mechanical splices may cause a noticeable change in optical loss. Also, connectors terminated with a two-part epoxy process are found to give the most stable results at the instrument optical port.

4.4.2 Test setup cable routing to minimize macro bends and micro bends.

4.4.2.1 Occurrence. Macro bend losses may occur when the bend in the cable becomes less than a critical bend diameter. Micro bend losses may occur when external forces are applied over a very small area. This applied force is sufficient to place a small bend in the fiber. This bend may change light paths resulting in the coupling of lower and higher order modes. With both macro bend and micro bend losses, the higher order modes may be radiated out of the fiber causing a higher optical loss.

4.4.2.2 Preventative measures. To minimize macro bending, the cable routing shall be done so that any bend is not less than the minimum, long term, bend diameter of the cable. Sharp twists and bends are to be avoided. Cable routing is to avoid protrusions on shelving, runs perpendicular over other cable and other obstacles that may cause micro bending. Long term, bend diameter values should be stated in the applicable test procedures.

4.4.3 Test interruption.

4.4.3.1 Occurrence. Test interruption is considered to occur any time the test parameters fall outside of the ones specified. An example would be a temperature deviation exceeding ±2°C.

4.4.3.2 Corrective action. Once a test interruption occurs, the test sample shall be brought back to the unstressed condition at a controlled rate. The test shall then be continued from the point of repeating the last cycle prior to the interruption. For tests in which cycling is not performed, the test shall then be continued from the point of repeating the last action (as with the case of a mechanical test) or be continued from the point of repeating the last 12 hours (as with the case of an environmental soak type test). If collecting data during the test, start re-collecting data after repeating the last action or repeating the last 12 hours, as applicable.

4.4.4 Environmental chamber test charts.

4.4.4.1 Requirement. DLA Land and Maritime (DSCC) specifies detailed data requirements for some test methods. Test charts are required for tests performed in environmental chambers and contain recordings of the environmental conditions (such as temperature and humidity) inside the chamber. The test chart is to include the environmental chamber manufacturer, model, and serial number with the date of the recording.

4.4.4.2 Implementation. Objective evidence that test requirements were achieved whether it is circular chart, stored data on disk, or by other means approved by the qualifying activity. Any stored data must be retained and made available at Government request.

4.4.5 Multiple channel optical monitoring.

4.4.5.1 Number of channels to monitor. Unless otherwise specified, test samples with eight or less fibers/channels require that all channels be monitored. For test samples, excluding fiber optic cable, with higher fiber counts/numbers of channels, at least eight channels are to be monitored at different channels on each test sample. Unless otherwise specified, a minimum of 12 fibers are to be monitored in fiber optic cable with higher fiber counts (cables having greater than 8 fibers). One exception is for optical signal discontinuity. A minimum of four channels shall be monitored for optical signal discontinuity during shock and vibration.

4.4.5.2 Compliance. Each fiber/channel must be monitored individually with no fiber concatenation allowed. Exceptions will be considered on a per case basis only for test samples with no optical interfaces (such as fiber optic cable) and only for the optical signal discontinuity measurement during mechanical shock and vibration.

4.4.6 Recording and verifying pass/fail criteria.

4.4.6.1 Proper test criteria must be specified. Pass/fail criteria must be stated in the test procedure and available to the operating personnel performing the test.

4.4.6.2 Proper test fail criteria must be implemented. Operating personnel performing the test are to be knowledgeable in what constitutes a failure. The test laboratory shall determine if the result of each performance requirement for a test is a pass or fail and record that determination on the data sheet. A description of any failure is to be noted on the data sheet or supplemental documentation. Corrective measures, within the scope of the test setup (such as cleaning and reseating), are to be taken to resolve a failure. The corrective measures taken in trying to resolve a failure shall be recorded. If subsequent measurements obtained remain outside of the performance requirements, it is designated a failure. Alternative terminology (such as discrepancy or deviation) is not to be used.

4.4.6.3 Government determination of marginal performance. Government personnel, upon review of test documentation and instrumentation specifications, may determine that data just outside of the performance requirement is marginal. Allowance for this determination is made when using specialized test equipment for a more unique measurement. This allowance is not applicable for test equipment used in most of the optical tests conducted.

4.4.6.4 Pass/fail interpretation for number of test samples. Some tests specify a minimum number of channels must be monitored (such as a minimum of four channels for optical signal discontinuity). The intent is to address the case where the number of channels falls below that specified for the specific component (such as in accordance with 4.4.5.1). This allowance for a reduced number of channels is based on the type of instrumentation available to do the specified measurement. Unless otherwise specified by the qualifying activity, each available channel on the optical measurement instrumentation shall be used (such as all channels of the DUT or each single channel DUT, as applicable up to the specified limit in accordance with 4.4.5.1, shall be monitored if the capability exists). Each channel of the DUT/each DUT measured shall be used in determining if the DUT met the pass/fail criteria.

4.4.6.5 Pass/fail interpretation for measurements taken during and after versus only after a test. Some tests require only the change in optical transmittance after the test. In this case, only the baseline and posttest measurements are required and are used to determine the pass/fail criteria. Optical transmittance measurements may be obtained during the test for engineering informational purposes but shall not be considered in determining if the DUT met the pass/fail criteria.

4.5 Laser and fiber optic safety compliance.

4.5.1 Laser safety precautions. The classification of a laser is based on the ability of the optical beam to cause damage to the eye. Under normal operating conditions, the laser diode found in an optical fiber communication system (OFCS) is inherently an eye safe system; but, when an optical fiber connection is broken and optical viewing instruments are used, it is possible that hazardous energy can enter the eye. For this reason four service group hazard classes have been devised to indicate the degree of hazard and required hazard control measures. Refer to LIA Z136.2 for a full technical definition. Refer to subordinate Work Package 004 01 of NAVAIR 01-1A-505-4/T.O. 1-1A-14-4/TM 1-1500-323-24-4 for a laser safety refresher summary. Verify, at a minimum, that operating/test personnel are aware and adhere to 4.5.1a through 4.5.1d.

a. Verify that operating/test personnel observe and adhere to all Warning/Caution/Advisories/Notes in the applicable procedures and manuals for setup, repair, and operation of test and optical measurement equipment.

b. Verify that operating/test personnel are familiar with the degree of hazard and the required control measures for the laser in use.

c. Verify that operating/test personnel are aware to never stare into the end of an optical fiber connected to an LED or laser diode and do not stare into broken, severed, or disconnected optical cables. Light generated by light emitting diodes (LED's) and laser diodes may not be visible but may still be hazardous to the unprotected eye.

d. Verify that operating/test personnel are aware to never view the primary beam or a specular reflection from an OFCS, test apparatus, or optical measurement equipment with an optical microscope, eye loupe, or other viewing instrument. The instrument may create an eye hazard due to its light gathering capability

4.5.2 Fiber optic safety precautions. The fiber optic safety precautions listed in subordinate Work Package 004 01 of NAVAIR 01-1A-505-4/T.O. 1-1A-14-4/TM 1-1500-323-24-4 shall apply. Verify, at a minimum, that operating/test personnel are aware of 4.5.2a through 4.5.2m.

a. Keep all food and beverages out of the work area. If fiber particles are ingested they can cause internal injury.
b. Do not smoke while working with fiber optic systems.
c. Always wear safety glasses with side shields. Treat fiber optic splinters the same as glass splinters.
d. Never look directly into the end of fiber cables until you are positive that there is no light source at the other end. Use a fiber optic power meter to make certain the fiber is dark.
e. Do not touch the ends of the fiber, as they may be razor sharp. Rinse hands thoroughly under running water to rinse away any glass shards.
f. Contact wearers must not handle their lenses until they have thoroughly rinsed and then washed their hands.
g. In the event glass shards enter the eye or penetrate the skin seek medical attention immediately.

CAUTION: Do not rub your eye. Only authorized medical personnel should attempt removal of glass shards from the eye. Do not attempt removal of glass from the eye yourself!

h. Do not touch your eyes while working with fiber optic systems until your hands have been thoroughly cleaned.
i Clean hands thoroughly first by rinsing hands under running water to rinse away any glass shards after handling and repairing fiber. Then wash normally. Wear protective gloves if at all possible.
j. Keep all combustible materials safely away from heat sources.
k. Ultraviolet (UV) safety glasses shall be worn when using the UV curing lamp.
l. Only work in well-ventilated areas.
m. Avoid skin contact with epoxies.

4.6 Operating wavelength. Unless otherwise specified, the default operating wavelengths in 4.6.1 and 4.6.2 shall be specified as the standard transmission wavelength for the optical test instrumentation. Where feasible, wavelength of operation shall be standardized.

4.6.1 Default. Optical test instrumentation shall be designed to operate at a nominal wavelength of either 850 nanometers (nm) for multimode optical fibers and at 1,550 nm for single mode optical fibers.

4.6.2 Default, shipboard. Optical test instrumentation shall be designed to operate at a nominal wavelength of either 1,300 nanometers (nm) for multimode optical fibers and at 1,310 nm for single mode optical fibers. Other wavelengths of operation may be specified but are less preferred.

4.7 Consensus for optical performance measurements. Part 2 of this Standard Practice is a compilation of existing requirements. Consensus was obtained among various Government Activities, responsible for specifying the performance of fiber optic cabling components and systems/networks, on the requirements documented herein. These same Government Activities shall be the means to reach consensus on standardization of new/revised requirements, identify new requirements and new technologies that permit its rapid introduction, and provide those requirements to update Part 2 of this Standard Practice.

4.8 Use the prescription approach cited. Part 2 of this Standard Practice was developed to further define the test requirements, test methods and test measurement systems to be used for performing optical measurements. As the precursors to this document evolved, it became evident that requirements for optical test measurement instrumentation needed to be better defined to ensure that the risk to the Government of accepting bad optical measurement data was low. In the past, testing was done using a host of different type optical measurement systems. Some of the optical measurement instrumentation used provided very optimum results (such as using very restrictive launch conditions or smaller area detectors than the fiber core size used). Other optical measurement instrumentation did not provide consistent conditions or were of questionable stability. To minimize test variations and permit more accurate comparison of test results from multiple sources, a “prescription” approach evolved for optical measurement instrumentation. The use of a standardized launch condition approach requires that an optically well-behaved measurement system be used. Use of this prescription approach of specifically defined instrumentation used in conjunction with a standardized launch condition allows verification without necessitating analysis of the launch conditions to verify compliance.

4.8.1 Launch conditions. Unless otherwise specified, standardization shall be with the use of launch jumpers, mode filters, and specified optical source criteria.

4.8.2 Change in optical transmittance. Unless otherwise specified, the optical measurement system shall consist of optical sources, power meters, and switching system. This configuration is the one sold by vendors of laboratory grade optical test instrumentation during the time the precursors to this document were developed.

4.8.3 Insertion loss. Unless otherwise specified, the optical measurement system shall consist of an optical source and power meter with no intermediary devices.

4.9 Inspection by attributes. The random sampling alternative and inspection by attributes are applicable for the specified quality conformance inspections only. For qualification and for initial validation of the process, inspection shall be performed on 100 percent of samples with data supplied. Data includes a value and unit of measure for each measurement required on each sample. Inspection by attributes is an assessment in which each sample is measured then rated as conforming or nonconforming with respect to a given specification requirement or set of requirements (no measurement data provided).

5. DETAILED REQUIREMENTS

5.1 Optical measurements. Measurements shall be implemented as specified in 5.1.1 through 5.1.6.

5.1.1 Insertion loss. Measurements shall be performed to Measurement 2101.

5.1.2 Change in optical transmittance. Measurement shall be performed to Measurement 2102.

5.1.3 Optical crosstalk. Measurements shall be performed to Measurement 2103.

5.1.4 Optical signal discontinuity. Measurements shall be performed to Measurement 2104.

5.1.5 Optical return loss. Measurements shall be performed to Measurement 2105.

5.1.6 Attenuation rate. Measurements shall be performed to Measurement 2106.

5.2 Support processes for optical measurements. Support processes for measurements shall be implemented as specified in 5.2.1 through 5.2.3.

5.2.1 Test procedures. Test procedures shall be prepared to include the items listed in Measurement Support Process 2201.

5.2.2 Optical Test Instrumentation. Optical test instrumentation used to perform optical measurements shall meet specified parameters in Measurement Support Process 2202.

5.2.3 Launch conditions. Launch conditions in the optical measurement system shall be in accordance with Measurement Support Process 2203.

5.2.4 Rectangular backplane connector engagement and test fixtures. Rectangular backplane connector engagement and test fixtures used to perform optical measurements shall meet specified parameters in Measurement Support Process 2204.

6. NOTES

(This section contains information of a general or explanatory nature that may be helpful but is not mandatory.)

6.1 Intended use. The measurements depicted in this standard practice are intended for qualification testing; however, they are applicable for other types of test or evaluation programs that require these specific measurements for fiber optic cabling components used on military mobile vehicles, also identified as platforms.

6.2 Acquisition requirements. Acquisition documents should specify the following:

Title, number, and date of this standard practice.

6.3 Subject term (key word) listing.

Attenuation
Fiber optic cabling
Insertion loss
Launch conditions
Optical measurements

6.4 Change notations. The margins of this specification are marked with vertical lines to indicate modifications generated by this change. This was done as a convenience only and the Government assumes no liability whatsoever for any inaccuracies in these notations. Bidders and contractors are cautioned to evaluate the requirements of this document based on the entire content irrespective of the marginal notations.

6.5 Supersession data. The five parts of MIL-STD-1678 replace superseded DOD-STD-1678 with completely new fiber optic requirements and measurements. With the exception of some legacy material in Part 5 of MIL-STD-1678, none of the fiber optic test and measurement material comprising superseded DOD-STD-1678 has been included. With the exceptions noted in Part 5 of this standard practice, this standard practice should be applied in lieu of the legacy methods in superseded DOD-STD-1678.

OPTICAL MEASUREMENTS

(2101- 2106)

MEASUREMENT 2101.3

INSERTION LOSS.

1. Purpose. This measurement is performed when there is the requirement to take a measurement for the insertion of a component/DUT into the cable relative to that of the uncut cable. The uncut cable measurement acts as the baseline measurement. The three allowed variations in the method to perform this measurement are the original insertion, cut-back, and simulated cut-back. Measurement 2101 is intended to standardize on the performance of this measurement, as specified in the commercial standard (TIA455.34), by imposing further refinements or boundaries (constraints). To ensure that the risk to the Government of accepting bad optical measurement data is low, to minimize test variations and to permit more accurate comparison of test results from multiple sources, a "prescription" approach is specified for the optical instrumentation used to obtain this measurement.

1.1 Measurement 2101 with revision designator. See 1.3 and 1.4 in Part 2 of this Standard Practice (material in beginning of Part 2) to identify the Measurement number from the revision designator and method to reference this Measurement in other documents.

2. APPLICABLE DOCUMENTS

2.1 General. The documents listed in this section are specified in sections 3, 4, and 5 of this specification. This section does not include documents cited in other sections of this specification or recommended for additional information or as examples. While every effort has been made to ensure the completeness of this list, document users are cautioned that they must meet all specified requirements of documents cited in sections 3, 4, and 5 of this specification, whether or not they are listed.

2.2 Non-Government publications. The following documents form a part of this document to the extent specified herein. Unless otherwise specified, the issues of these documents are those cited in the solicitation or contract.

TELECOMMUNICATIONS INDUSTRY ASSOCIATION

TIA526.14 - Optical Power Loss Measurements of Installed Multimode Cable Plant.
TIA455.34 - Interconnection Device Insertion Loss Test.

(Copies are available online at http://www.tiaonline.org/standards/catalog/index.cfm or from TIA, 2500 Wilson Boulevard, Suite 300, Arlington, VA 22201, USA, ATTN: Standards Department.)

2.3 Order of precedence. Unless otherwise noted herein or in the contract, in the event of a conflict between the text of this document and the references cited herein, the text of this document takes precedence. Nothing in this document, however, supersedes applicable laws and regulations unless a specific exemption has been obtained.

3. DEFINITIONS

3.1 Original insertion method. This variation consists of obtaining a baseline measurement of the uncut cable, cutting the cable, inserting the component/DUT, taking measurements with the DUT inserted (DUT measurement), then calculating the DUT inserted measurement relative to a baseline measurement of the uncut cable to obtain the insertion loss (see figure 2101-1).

3.2 Cut-back method. This variation consists of taking the DUT measurement then performing a cut-back of the cable between the source and the DUT. Next place the cut-back pigtail into a bare fiber adapter or put on connector and obtain the baseline measurement. Calculate the DUT measurement relative to a baseline measurement of the cut-back pigtail to obtain the insertion loss. A wide area detector must be used for power meter measurements when using this variation (see figure 2101-2).

3.3 Simulated cut-back method. This variation consists of taking the DUT measurement then performing a simulated cut-back of the cable between the source and the DUT. The simulated cut-back is performed by disconnecting the DUT and placing the source (output) end of the DUT directly into the power meter to obtain the baseline measurement. Calculate the DUT measurement relative to a baseline measurement of the simulated cut-back to obtain the insertion loss. A wide area detector must be used for power meter measurements when using this variation (see figure 2101-3).

4. Setup. Three variations on the method to perform the insertion loss measurement are defined in 3.1 through 3.3. Where feasible, the initial insertion shall be performed using the setup for the original insertion loss method. When the cable assembly (cabling with DUT inserted) has been prepared in advance and sent to the testing facility, either the setup for the cut-back method or the simulated cut-back shall be used for the initial insertion loss measurement (for an example, see appendix A). Succeeding insertion loss verifications shall be performed using either the setup for the cut-back method or the simulated cut-back. In general, the setup shall reflect the original insertion method (see figure 2101-1), the cut-back method (see figure 2101-2), or the simulated cut-back (see figure 2101-3). Test sample configuration shall conform to 4.1 in Part 2 of this Standard Practice.

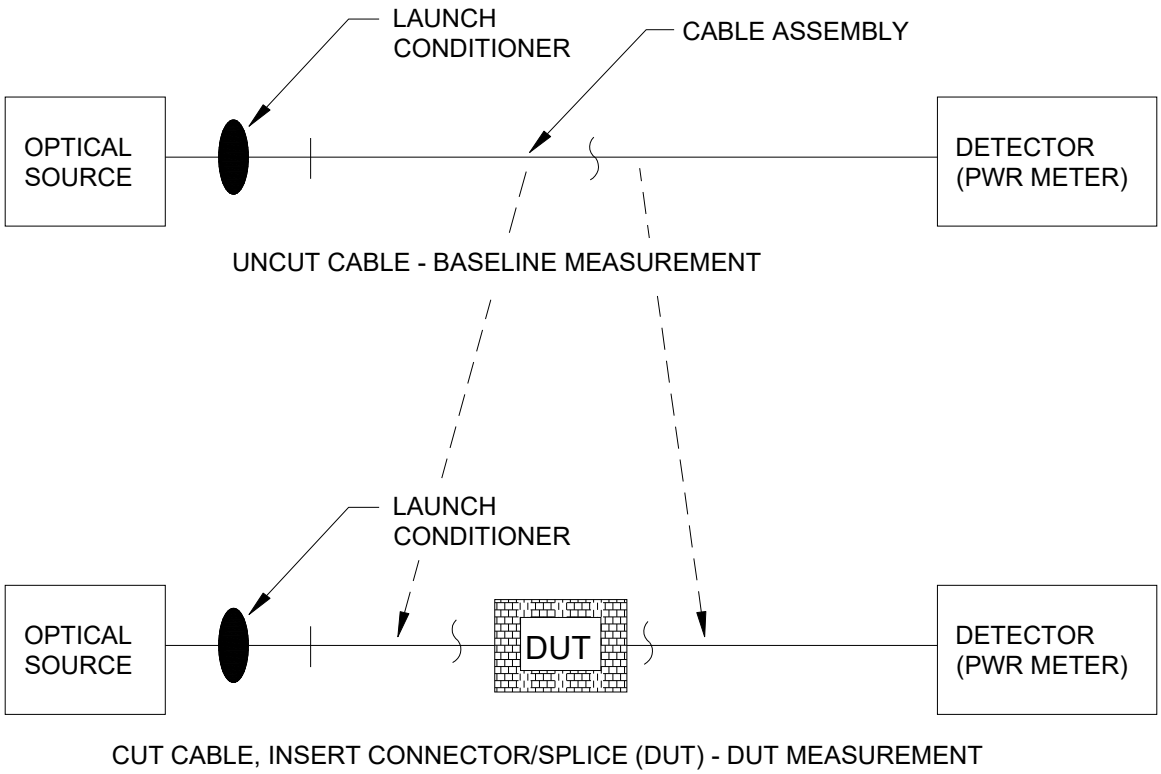

FIGURE 2101-1. Insertion loss: original insertion method.

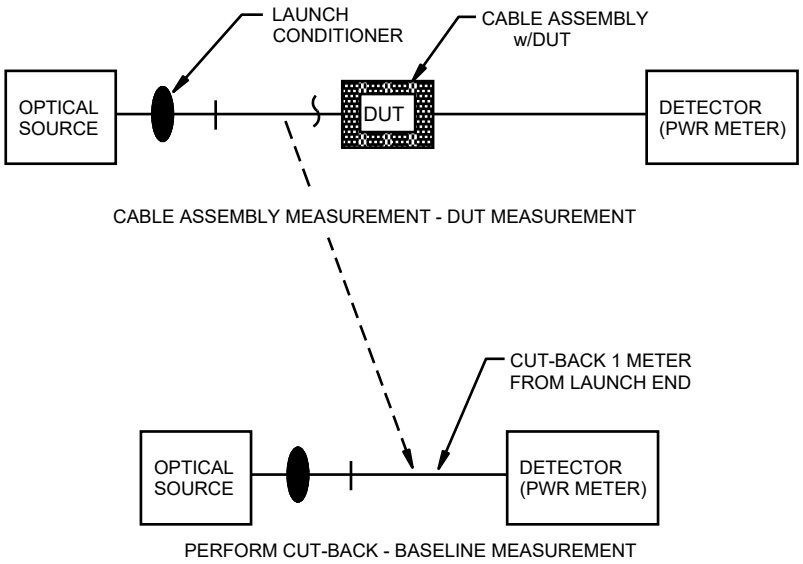

FIGURE 2101-2. Insertion loss: cut-back method.

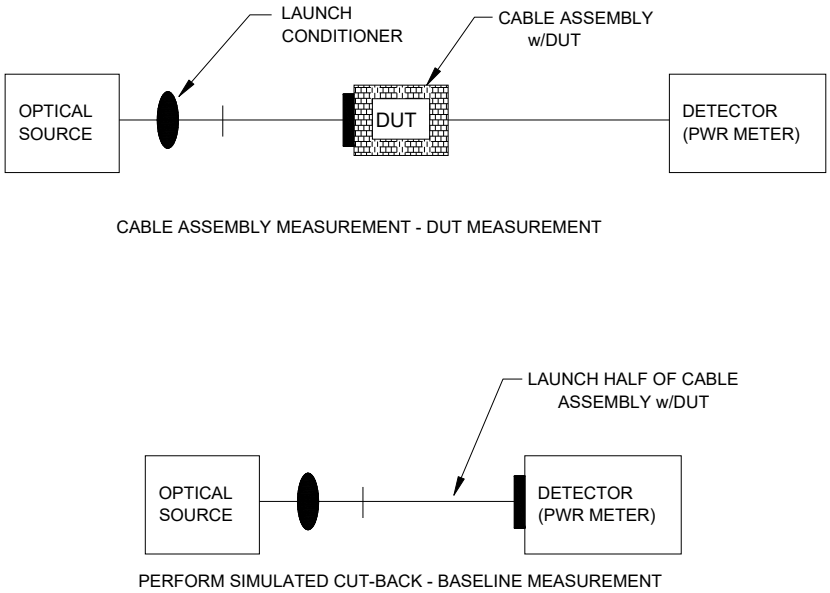

FIGURE 2101-3. Insertion loss: simulated cut-back method.

MEASUREMENT 2101.3

4.1 Connection at source end. No disconnection of the (optical) source end of the test sample from the source is permitted during this test.

4.2 Test equipment. Requirements for test equipment compliance are listed in Measurement Support Process 2202.

4.2.1 No switches. Test sample/DUT is connected directly from source to power meter. No intermediary devices, such as switches, that contribute additional sources of error shall be used.

4.2.2 No splicing is permitted. The intent is to measure only the insertion loss, not the insertion loss plus the end connection losses.

4.2.3 Use of wide area detector for cut-backs. To ensure all light emitted for the fiber is captured, a power meter with a wide area detector shall be used.

4.2.4 Launch conditions. Requirements for launch conditions are listed in Measurement Support Process 2203.

4.2.4.1 Initial insertion loss, multimode. Initial insertion loss for components with multimode fiber must be measured first using an overfilled launch condition and then repeated with the specified restricted launch condition. For a restricted launch condition, the launch condition shall be used as defined in Measurement Support Process 2203.

4.2.4.2 Subsequent insertion loss, multimode. Subsequent insertion loss for components with multimode fiber must be performed with the specified restricted launch condition (see above).

4.2.4.3 Insertion loss, single mode. For components with single mode fiber, light launch conditions (mode conditioning for filtering out higher order modes), as listed in Measurement Support Process 2203, shall be used.

4.2.5 Light source(s).

4.2.5.1 Optical source wavelength. Unless otherwise specified, measurements are to be taken at 1,310 nm for single mode fiber and at 1,300 nm for multimode fiber. For aircraft designated components, single mode fiber optic components shall be tested using optical sources at both the 1,310 nm and the 1,550 nm wavelengths. For aircraft designated components, multimode fiber optic components can be tested using an optical source at either the 850 nm or the 1,300 nm wavelength. Current preference is to use the 850 nm wavelength.

4.2.5.2 Optical source coherency. The insertion loss test for components with multimode fiber is to be done using an optical source with non-coherent light (an LED source shall be used, see 6.1.2). Coherent light source (LD) is preferred for components with single mode fiber.

4.2.5.3 Power meter. See Measurement Support Process 2202.

4.2.6 Verifications.

4.2.6.1 Verify conformance to requirements for optical light sources and detection system parameters listed above and in Measurement Support Process 2202.

4.2.6.2 Verify conformance to requirement for a wide area detector when the cut-back or the simulated cut-back method is used. Unless otherwise specified, a wide area detector for use in the cut-back method with a bare fiber adapter is one with a minimum active surface of 5 mm (.20 inch) in diameter (2 mm (.08 inch) diameter if verification technique can confirm complete light impingement on active area). The same condition holds for a connector inserted into a different configuration connector port when performing a simulated cut-back. For performing the original insertion loss method, verification of sufficient detector surface area as stated in Measurement Support Process 2202 is acceptable.

4.2.7 Test fixtures for rectangular backplane connector engagement distance. Test fixtures shall be used to set and maintain the module engagement distance for obtaining optical measurements of rectangular backplane connectors as specified Measurement 2204.

5. Test procedure.

5.1 Test methods. The test method shall be performed using one of three variations. These variations (original insertion, cut-back, simulated cut-back) have prescribed definitions. The checklist in appendix B is provided to ensure compliance for inspection purposes. Maximum allowed values for selected fiber optic components are tabulated in appendix C. Insertion loss measurements for multiple termini connectors are addressed in appendix A and for connectors with multiple fiber ferrules (such as MT ferrules) in appendix D.

5.1.1 Multimode. Perform in accordance with method A of TIA455.34, using both restricted and overfill launch conditions. See launch conditions under Setup for specific requirements for initial and subsequent insertion loss testing.

5.1.2 Single mode. Perform measurement in accordance with method B of TIA455.34.

5.2 Test performance, eliminate/reduce other sources of error. The intent is to measure insertion loss and eliminate or minimize potential sources of error.

5.2.1 Connector mates. The connector shall be mated ten times. Mates should be done in a manner that minimizes variation. Techniques such as tying down cabling except close to the connectors, use of substantial receptacle/adapter fixtures and in-line approach to mating/demating connectors should be practiced. Each mating loss, and not the average loss of the ten mates, is used in the evaluation of the pass/fail criteria.

5.2.2 Connector mating for cut-backs. For received cable assemblies, ten mates and de-mates are performed. Next the cable is cut back about 1 meter from the source and a bare fiber adapter is placed on the fiber end. The bare fiber adapter is inserted into the power meter. The cable may be re-terminated with a connector in lieu of using a bare fiber adapter.

5.2.3 No switches. Test sample/DUT is connected directly from source to power meter. No intermediary devices, such as switches, that contribute additional sources of error are used.

5.3 Test synopsis. This test synopsis has been developed under the assumption that the user or vendor has prepared the cable assemblies (containing the DUT) and sent them to the test laboratory (either in-house or outside) for testing. Test synopsis addresses performance of the cut-back method. This method is used after the DUT has been inserted into the cable assembly. Where feasible, the initial insertion loss shall be done first using the original insertion method. Where applicable, the simulated cut-back method may be employed as an acceptable alternative.

5.3.1 Perform ten mates and de-mates of the DUT for each measurement channel. For multiple termini connectors, perform per appendix A. For connectors with multiple fiber ferrules (such as MT ferrules), perform per appendix D.

5.3.1.1 Pass/fail criteria. Ten mates and de-mates are to be performed for insertion measurements, but none of the ten measurements can exceed the maximum acceptable value to meet the pass/fail criteria.

5.3.1.2 Test completion per channel or DUT. For a multiple channel connector, all channels in the connector do not have to be monitored for one insertion loss measurement (test) if sufficient number of optical sources and power meters are not available. If this is the case, complete the measurement with the channels connected before going back and repeating the insertion loss measurement for other channels. Once the DUT/channel is connected to the optical source, this connection must be maintained until after the insertion loss measurement is completed for the DUT/channel.

5.3.2 Perform cut-back test measurement. Depending upon the connection configuration being tested, this may be either a cut-back or a simulated cut-back.

5.3.3 Calculate the insertion loss.

5.3.4 Repeat steps 5.3.1 through 5.3.3 for other DUT's/channels.

5.4 Insertion loss calculation (with no monitor fiber used). Insertion loss is defined (in accordance with the equation below) as a positive value.

Insertion loss (OIL) = $-10 \log_{10} (P_1/P_0)$
Where P_0 = optical power measurement for the uncut cable (in units of Watts).
P_1 = optical power measurement with the DUT inserted (in units of Watts).

5.5 Data sheet. In addition to the items for the standard data sheet listed in Measurement Support Process 2201, the data sheet shall list which launch condition was used for samples with multimode fiber (overfilled or restricted) and how the launch condition was achieved.

5.6 Other restrictions.

5.6.1 Alternative test methods. No other methods, such as cable assembly loss methods A, B, or C in accordance with TIA526.14, are acceptable for performing this test.

5.6.2 Splicing. No fusion splicing or mechanical splicing of already constructed cable assemblies is permitted.

5.6.3 Disconnection at source. No disconnection of the source end of the test sample from the source is permitted during this test.

6. Notes.

6.1 Intended use.

6.1.1 Loss mechanisms. For single mode, a different loss mechanism dominates each window. Connection losses are greater at the 1,310 nm wavelength. Micro bend sensitivity losses dominate the 1,550 nm wavelength. For multimode, difference in loss at the 850 nm and 1,300 nm wavelength are cable length dependent. This loss is greater at the 850 nm wavelength.

6.1.2 Optical source type. The military specifications may state the optical source wavelength (such as 1,300 nm window) to use, but not the source type (LED, LD, and VCSEL). Some TIA standards specify the use of a non-coherent or non-monochromatic source. In general, an LED source should be used for components tested with multimode fiber. A laser diode (LD, Fabry Perot type) source is to be used for components with single mode fiber. An LED source used for testing a component with single mode fiber would provide a more conservative result and is not indicative of the way the component would be used in service. If the component passes using this latter configuration, then the test is valid. If the component fails, then the test would need to be repeated using a LD to determine if it is indeed a failure. Also, a LD source provides too optimistic of a result for components tested with multimode fiber and may lead to unacceptable noise in measurements. For consistency in a multiple component test procedure, the prescription approach dictates the use of an LED source for components tested with multimode fiber and a laser diode (LD) source for components with single mode fiber.

MEASUREMENT 2101.3

APPENDIX A

INSERTION LOSS MEASUREMENTS FOR MULTIPLE TERMINI CONNECTORS

A.1 Purpose. This appendix addresses methodology considerations specific to the insertion loss measurements for multiple termini connectors.

A.2 Initial insertion and verification after test sequence. The insertion loss measurement is performed at least twice on the test sample during a test sequence (see A.2.1 and A.2.2). For each insertion loss measurement, the connector will be mated ten times.

A.2.1 Initial insertion loss. An insertion loss test will be performed prior to the start of a mechanical or environmental test sequence (initial insertion loss test). To ensure that testing is begun with an acceptable test sample (DUT), the initial insertion loss is placed in group 1 in the test sequence.

A.2.1.1 Sending pre-assembled test samples to test laboratory. With a multiple termini connector, the test sample is received as an already terminated cable assembly. No baseline measurement can be obtained unless a cut back or simulated cut back is performed. For this scenario, the test laboratory will perform a cut-back or simulated cut-back for the initial insertion loss.

A.2.1.2 Limitations. The limitations of each method described in A.2.2.2, A.2.2.3, and A3.1 apply.

A.2.2 Insertion loss verification. Once a test sequence is concluded, a second insertion loss measurement (insertion loss verification test) is performed.

A.2.2.1 Allowed methods. This insertion loss test for multiple termini connectors will be performed using the cut back method or the simulated cut-back method.

A.2.2.2 Simulated cut-back. This method involves simulating the cut back by removing the terminus in the connector half on the launch end of the cable. The cabling is not disturbed for this measurement; however, removal and reinsertion of the termini is required.

A.2.2.3 Cut-back. This method involved not removing any termini from the connector insert cavities; however, cabling between the optical source and the test sample is cut. Connectors must again be placed on the source end of this cabling prior to performing further testing.

A.3 Performance impact.

A.3.1 Simulated cut back. Studies performed to assess optical performance have shown that termini removal and re-insertion into the cavities may impact the optical performance. This process has shown to be a possible source of error in assessing insertion loss performance.

A.3.2 Preference for original insertion method. Each insertion loss test requires a baseline measurement to determine the optical loss prior to inserting the test sample into the cable assembly. A true initial insertion loss test will not disturb any connections since it is performed by:

a. Taking the baseline measurement of the uncut cable.

b. Cutting the cable in half and inserting the test sample.

c. Obtaining the measurement with the test sample inserted.

d. Calculating the optical loss (insertion loss).

MEASUREMENT 2101.3

APPENDIX A

A.3.3 Allowance for baseline measurement. If the optical instrumentation is connected at the time prior to taking the baseline measurement and remains connected throughout the test sequence, then the baseline measurement can be used to determine insertion loss for both the initial and verification measurements.

MEASUREMENT 2101.3

APPENDIX B

MINIMUM ESSENTIAL CHECKLIST FOR INSERTION LOSS MEASUREMENTS

B.1 Purpose. This appendix addresses a checklist of the minimum essentials for the optical insertion loss (OIL) measurement.

B.2 Usage. Table 2101 B-I is the checklist of minimum essentials for Government auditors, or their representatives, to be used during inspections. This checklist should be expanded at the auditor's discretion.

TABLE 2101 B-I. Minimum essential checklist for insertion loss measurements.

Item	Category	Description	Requirement	Compliance
1	Test sample configuration	Cable assembly length: Connectors and splices	10 meters minimum (13 m if to do 3 cut-backs)	
2	Room ambient environmental condition	Standard Ambient (if test equipment built to operate in this range, if not-then controlled ambient)	23 ± 5°C/73 ± 9°F and 20 to 70 percent RH	
		Controlled Ambient, pertains to items 5 to 7	23 ± 2°C/73 ± 4°F and 45 to 55 percent RH	
3	Test condition	Test setup cable routing	Bend diameters ≥ min long term bend diameter	
			Sharp twists and bends avoided	
			Avoid protrusions/other obstacles	
4	Environmental	Temperature and humidity profiles recorded	Chart, stored data on disk, other approved means	
	Chamber charts		Includes chamber model and serial, date of test	
	Test equipment	Pertains to items 5 to 7		
5	Multimode optical source	Source type: LED	Compliance with Measurement Support Process 2203	
		Performance parameters	Compliance with Measurement Support Process 2202	
6	Single mode optical source	Source type: LD	Compliance with Measurement Support Process 2203	
		Performance parameters	Compliance with Measurement Support Process 2202	
7	Power meter	Performance parameters	Compliance with Measurement Support Process 2202	
		Added requirement: Detector size (see detector verification test trigonometric analysis, Measurement Support Process 2202) If do cut-back or simulated cut-back, wide area detector used (5 mm (.20 inch) diameter minimum)	Sufficient active area and placed sufficiently close to the end of the fiber to detect all the radiation emitted from it (captures light – both spatial and angular)	
	Launch conditions	Pertains to items 8 to 10.		
8	Multimode	Overfilled launch (initial OIL only)	Compliance with Measurement Support Process 2203	
9	Multimode	Restricted launch (initial and all subsequent OIL)	Compliance with Measurement Support Process 2203	
10	Single mode	Reduce higher order modes	Compliance with Measurement Support Process 2203	

MEASUREMENT 2101.3

APPENDIX B

TABLE 2101 B-I. Minimum essential checklist for insertion loss measurements - Continued.

Item	Category	Description	Requirement	Compliance
11	Test setup	Items to inspect for compliance	No switching system (source-DUT-detector)	
			No splicing of cable assembly	
			Restricted launch at source end of each DUT/each channel	
		Items to minimize variation in test	Secure/tie down cables (no move at instr. ports)	
			In line mate/demate connection for mates	
			Use of substantial fixtures (no wobbling)	
12	Test	Test procedure	Compliance with Measurement Support Process 2201	
		Maintain setup during test (source end)	No disconnection allowed until after testing completed	
		Measurement after DUT insertion	Ten mates and de-mates performed	
		Simulate cable: pre-DUT insertion	Cut-back (use bare fiber adapter, ST or FC)	
			or simulated cut-back (if configuration permits)	
13	Calculation	Equation to give value in dB	Verify proper method if operator performed	
		Sign convention	Recorded as positive value	
14	Data Sheet	Approved data sheet	Compliance with Measurement Support Process 2201	
		Added data sheet requirement	Method used to do restricted launch condition	
15	Pass/fail criteria	Proper criteria specified	Conforms with MIL-SPEC parameters and values	
		Proper criteria implemented	Test operators knows if fail and to verify result	

B.3. Notes.

B.3.1 Intended use.

B.3.1.1 Audit team. This checklist is intended to assist Government auditors or their representatives during inspections of the optical measurement system. This checklist may be augmented at the auditor's discretion; however, it is not to be reduced.

B.3.1.2 Test laboratories. When test laboratories prepare to perform optical measurements or audits, this checklist should be used to supplement Measurement 2201, not replace it.

MEASUREMENT 2101.3

APPENDIX C

MAXIMUM ALLOWED VALUES FOR INSERTION LOSS MEASUREMENTS

C.1 Purpose. This appendix provides in tabular format a listing of the maximum allowed values for insertion loss that are specified in various military fiber optic component specifications.

C.2. APPLICABLE DOCUMENTS

C.2.1 General. The documents listed in this section are specified in sections C-3, C-4, and C-5 of this standard practice. This section does not include documents cited in other sections of this standard practice or recommended for additional information or as examples. While every effort has been made to ensure the completeness of this list, document users are cautioned that they must meet all specified requirements of documents cited in sections C-3, C-4, and C-5 of this standard practice, whether or not they are listed.

C.2.2 Government documents.

C.2.2.1 Specifications, standards, and handbooks. The following specifications, standards, and handbooks form a part of this document to the extent specified herein. Unless otherwise specified, the issues of these documents are those cited in the solicitation or contract.

DEPARTMENT OF DEFENSE SPECIFICATIONS

MIL-PRF-24623	-	Splice, Fiber Optic Cable, General Specification for (Metric).
MIL-PRF-29504	-	Termini, Fiber Optic Connectors, Removable, General Specification for.
MIL-PRF-28876	-	Connectors, Fiber Optic Circular, Plug and Receptacle Style, Multiple Removable Termini, General Specification for.
MIL-PRF-64266	-	Connectors, Fiber Optic, Circular, Plug and Receptacle Style, Multiple Removable Genderless Termini, Environment Resisting General Specification For
MIL-DTL-83522	-	Connectors, Fiber Optic, Single Termini, General Specification for.

(Copies of these documents are available online at https://quicksearch.dla.mil/)

C.2.2.2 Other Government documents, drawings, and publications. The following other Government documents, drawings, and publications form a part of this document to the extent specified herein. Unless otherwise specified, the issues of these documents are those cited in the solicitation or contract.

NAVSEA Drawing 8283255	-	Termini, Fiber Optic, MIL-PRF-29504/4 and MIL-PRF-29504/5, Test Sample Configurations/Fabrication and Specific Methods/Practices.
NAVSEA Drawing 8283458	-	Termini, Fiber Optic, MIL-PRF-29504/14 and MIL-PRF-29504/15, Test Sample Configuration/Fabrication and Specific Methods/Practices.
NAVSEA Drawing 8283460	-	Termini, Fiber Optic, MIL-PRF-29504/18, Test Sample Configurations/Fabrication and Specific Methods/Practices.

(A copy of the NAVSEA Drawings can be obtained at web site: https://fiberoptics.nswc.navy.mil/ in the NAVSEA Drawing section under Component Information. If unable to access this Web Site, request an application by e-mail to NSWC DD Warfare Systems Department at: DLGR_NSWC_Foweb@navy.mil.)

C.2.3 Order of precedence. Unless otherwise noted herein or in the contract, in the event of a conflict between the text of this document and the references cited herein, the text of this document takes precedence. Nothing in this document, however, supersedes applicable laws and regulations unless a specific exemption has been obtained.

MEASUREMENT 2101.3

APPENDIX C

C.3 Pass/fail criteria. The initial insertion loss will not exceed the value specified in column 4 of table 2101 C-I. Any subsequent insertion loss (i.e., insertion loss verification) will not exceed the value specified in column 5 of table 2101 C-I.

C.4 Intended use. Table 2101 C-I provides pass/fail criteria to assist Government auditors, or their representatives, during documentation reviews (such as test procedures and test reports) and inspections. Revisions to the military specifications supersedes any values found in table 2101 C-I.

TABLE 2101 C-I. Maximum allowed insertion loss.

Fiber type (MIL-PRF-49291)	DUT (Termini/ splice/connector)	Fiber size	Initial insertion loss (dB)	Insertion loss verification (dB)
/3	M29504/1 or /12	50/125	N/A	2.00
/3	M29504/2 or /13	50/125	N/A	2.00
/4	M29504/1 or /12	100/140	N/A	1.50
/4	M29504/2 or /13	100/140	N/A	1.50
/6	M29504/14	62.5/125	0.75	1.25
/6	M29504/15	62.5/125	0.75	1.25
/7	M29504/14	SM	0.75	1.25
/7	M29504/15	SM	0.75	1.25
Aerospace 2/	M29504/4	SM	0.75	1.25
Aerospace 2/	M29504/5	SM	0.75	1.25
Aerospace 2/	M29504/4	50/125,100/140	1.00 1/	1.50 1/
Aerospace 2/	M29504/5	50/125,100/140	1.00 1/	1.50 1/
/6 and /7	M83522/16	SM, 62.5/125	1.00 1/	1.50 1/
/6	M24623/6	62.5/125	0.2	0.5
/7	M24623/6	62.5/125	0.3	0.3
/10	M24623/7	62.5/125	0.5	1.0
/11	M24623/7	SM	0.5	1.0
/12	M24623/7	50/125	0.5	1.0
Aerospace 2/	M24623/7	100/140	0.5	1.0
/12	M29504/18 and /20	50/125	0.5	0.75
Aerospace 2/	M29504/18 and /20	100/140	0.5	0.75
/6	M29504/18 and /20	62.5/125	0.5	0.75
/10	M29504/18 and /20	62.5/125	0.5	0.75
/7	M29504/18 and /20	SM	0.5	0.75
/11	M29504/18 and /20	SM	0.5	0.75
Aerospace 2/	M29504/18 and /20	SM	0.5	0.75
Aerospace 2/	M29504/18 and /20	50/125,100/140	0.5	0.75

1/ Long-term objective: Initial insertion loss shall not exceed 0.75 dB, maximum loss for subsequent insertion loss tests shall not exceed 1.25 dB.
2/ Aerospace fiber/cables used are to be specified by NAVSEA Drawing 8283255, 8283258, or 8283460, as applicable.
3/ MIL-PRF-29504/14 and MIL-PRF-29504/15 termini are for use with the MIL-PRF-28876 multiple termini connector.
4/ MIL-PRF-29504/18 and /20 terminus is for use with the MIL-PRF-64266 multiple termini connector.

MEASUREMENT 2101.3

APPENDIX D

INSERTION LOSS MEASUREMENTS FOR CONNECTORS WITH MULTIPLE FIBER FERRULES

D.1 Purpose. This appendix provides acceptable test setups that are to be used only when performing an optical insertion loss measurement for a connector with multiple fiber ferrules (such as MT ferrules). This appendix does not apply to other component/DUT configurations (such as connectors with single fiber ferrule termini and single fiber ferrule connectors). Otherwise, this appendix augments sections 4 and 5 of Measurement 2101 for connectors with multiple fiber ferrules.

D.2 Initial insertion and verification after test sequence. The insertion loss measurement is performed at least twice on the test sample during a test sequence (see D.2.1 and D.2.2). For each insertion loss measurement, the connector shall be mated ten times for obtaining the DUT cable assembly measurement "P_1".

D.2.1 Initial insertion loss. An insertion loss test shall be performed prior to the start of a mechanical or environmental test sequence (initial insertion loss test). To ensure that testing is begun with an acceptable test sample (DUT), the initial insertion loss is placed in group 1 in the test sequence.

D.2.1.1 Sending pre-assembled test samples to test laboratory. With a connector with a multiple fiber ferrule, the test sample is received as an already terminated cable assembly. No baseline measurement can be obtained unless a cut back or simulated cut back is performed. For this scenario, the test laboratory shall perform a cut-back or simulated cut-back for the initial insertion loss.

D.2.1.2 Limitations. The limitations of each method described in D.2.2.2 and D.2.2.3 apply.

D.2.2 Insertion loss verification. Once a test sequence is concluded, a second insertion loss measurement (insertion loss verification test) is performed.

D.2.2.1 Allowed methods. This insertion loss test for connectors with multiple fiber ferrules shall be performed using the cut back method or the simulated cut-back method.

D.2.2.2 Simulated cut-back. This method involves simulating the cut back by uncoupling the connector mated pair, then the connector half on the launch end of the cable is inserted directly into the integrating sphere detector. The cabling at the launch end from optical source to the launch end of the DUT is not disturbed for this measurement. One limitation is that the connector mated pair must be uncoupled, then recoupled.

D.2.2.3 Cut-back. This method involved not uncoupling the mated connector; however, cabling between the instrument end connectors of the DUT and the launch end of the DUT is cut. After the conclusion of this test, one limitation is that instrument end connectors must again be placed on launch end of the DUT prior to performing further testing.

D.3 Setup.

D.3.1 Simulated cut-back. Setup 1 shall be used. Setup in figure 2101 D-1 shall be used for obtaining the DUT cable assembly measurement "P_1" for a connector mated pair with multiple fiber ferrules. Setup in figure 2101 D-2 shall be used for simulating the cut-back and obtaining the measurement "P_0" for connector mated pair with multiple fiber ferrules.

D.3.2 Cut-back. Setup 2 shall be used. Setup in figure 2101 D-3 shall be used for obtaining the DUT cable assembly measurement "P_1" for a connector mated pair with multiple fiber ferrules. Setup in figure 2101 D-4 shall be used for performing the cut-back and obtaining the measurement "P_0" for connector mated pair with multiple fiber ferrules.

D.3.3 Allowance for source end connector transition (reference) cables. Source end connector transition (reference) cable is optional (allowed, but less preferred). For multimode cable assemblies, use of source end connector transition cables is contingent upon not impacting the target launch condition. No receive (detector) end connector transition cables is permitted for an insertion loss measurement. See figure 2101 D-3 for example of a setup that shows inclusion of source end connector transition (reference) cables.

D.4 Notes.

D.4.1 Preference for original insertion method. Each insertion loss test requires a baseline measurement to determine the optical loss prior to inserting the test sample into the cable assembly. A true initial insertion loss test will not disturb any connections. Due to the process employed to terminate a multiple fiber ferrule onto the end of cable, performance of the initial insertion loss test at the cable assembly fabrication site is usually (almost always) not feasible.

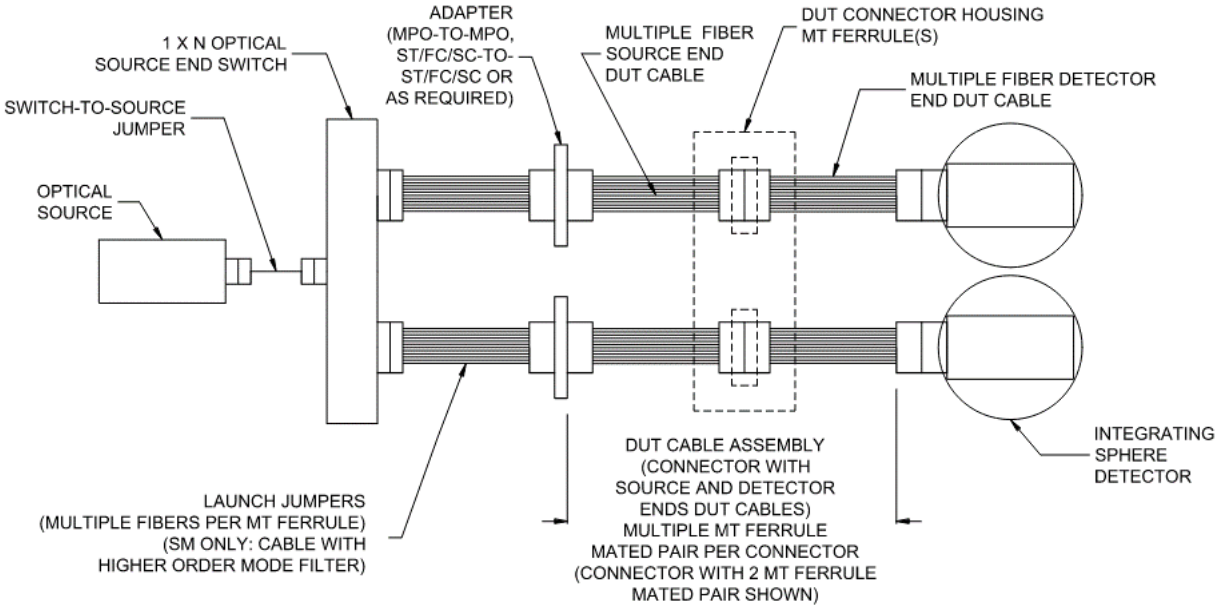

FIGURE 2101 D-1. Setup 1: DUT cable assembly measurement “P_1”, connector mated pair with multiple fiber (such as MT) ferrules.

MEASUREMENT 2101.3

APPENDIX D

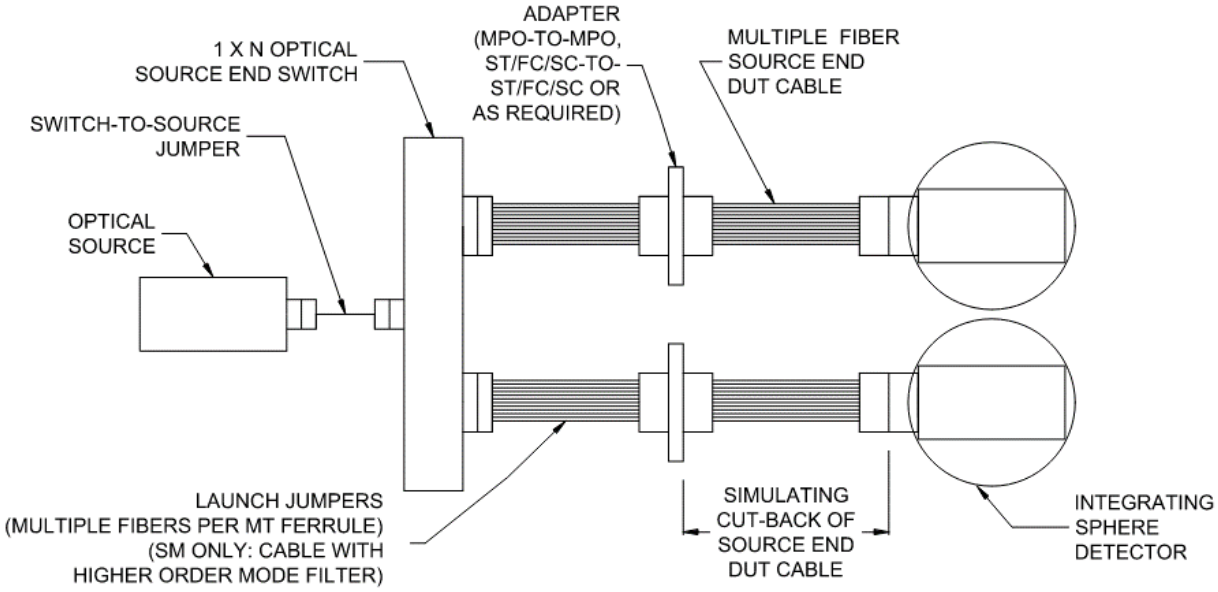

FIGURE 2101 D-2. Setup 1: Simulated cut-back (reference) measurement “P_0” connector mated pair with multiple fiber (such as MT) ferrules.

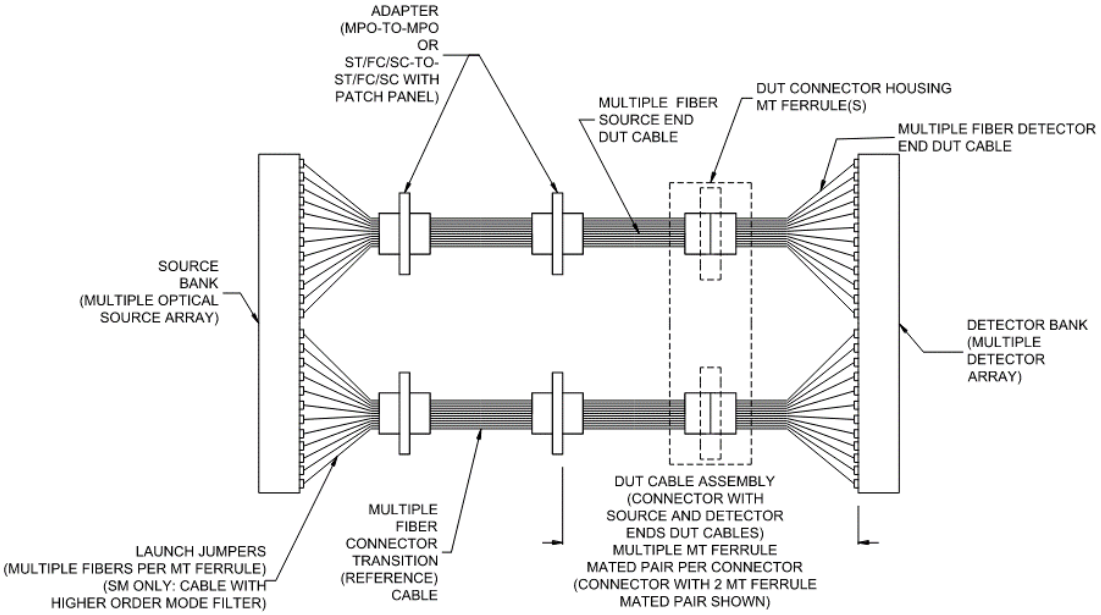

FIGURE 2101 D-3. Setup 2: DUT cable assembly measurement “P_1”, connector mated pair with multiple fiber (such as MT) ferrules.

MEASUTREMENT 2101.3

APPENDIX D

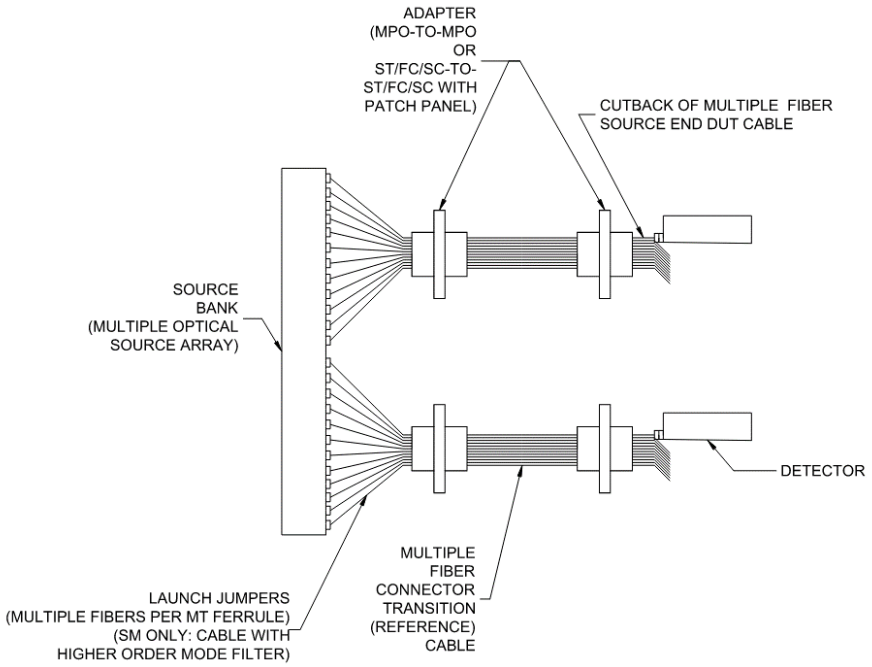

FIGURE 2101 D-4. Setup 2: Cut-back (reference) measurement “P_0”, connector mated pair with multiple fiber (such as MT) ferrules.

MEASUREMENT 2102.2

CHANGE IN OPTICAL TRANSMITTANCE

1. Purpose. This measurement is performed when there is the requirement to take measurements during and after the test relative to a pre-test measurement. The pre-test measurement acts as the baseline measurement. Measurement 2102 is intended to standardize the performance of this measurement, as specified in a former version of the commercial standard (TIA455.20), by imposing further refinements or boundaries (constraints). To ensure that the risk to the Government of accepting bad optical measurement data is low, to minimize test variations and to permit more accurate comparison of test results from multiple sources, a "prescription" approach is specified for the optical instrumentation used to obtain this measurement.

1.1 Measurement 2102 with revision designator. See 1.3 and 1.4 in Part 2 of this Standard Practice (material in beginning of Part 2) to identify the Measurement number from the revision designator and method to reference this Measurement in other documents.

2. APPLICABLE DOCUMENTS

2.1 General. The documents listed in this section are specified in sections 3, 4, and 5 of this standard practice. This section does not include documents cited in other sections of this standard practice or recommended for additional information or as examples. While every effort has been made to ensure the completeness of this list, document users are cautioned that they must meet all specified requirements of documents cited in sections 3, 4, and 5 of this standard practice, whether or not they are listed.

2.2 Non-Government publications. The following documents form a part of this document to the extent specified herein. Unless otherwise specified, the issues of these documents are those cited in the solicitation or contract.

TELECOMMUNICATIONS INDUSTRY ASSOCIATION

TIA-455.20 - Measurement of Change in Optical Transmittance.

(Copies are available online at http://www.tiaonline.org/standards/catalog/index.cfm or from TIA, 2500 Wilson Boulevard, Suite 300, Arlington, VA 22201, USA, ATTN: Standards Department.)

2.3 Order of precedence. Unless otherwise noted herein or in the contract, in the event of a conflict between the text of this document and the references cited herein, the text of this document takes precedence. Nothing in this document, however, supersedes applicable laws and regulations unless a specific exemption has been obtained.

3. Definitions.

3.1 Baseline measurement. The measurement to obtain the optical power level (such as optical transmittance) that is taken before the start of the test.

3.2 Change in optical transmittance. The calculation of each test measurement relative to a baseline measurement.

3.3 Monitor fiber. A fiber used to compensate for instability of the optical source.

3.4 Reference fiber. A fiber used to compensate for the environmental or mechanical stress of the fiber optic cable. The reference fiber is the same fiber type and cable construction as the other channels in which a DUT was inserted; however, it contains no DUT.

3.5 Test measurement. The measurement to obtain the optical power level (such as optical transmittance) that is taken at a point during the test or at the conclusion of the test. When referenced to the baseline measurement, this measurement may be referred to as a "subsequent" measurement.

4. Setup. The setup for optical measurements (both baseline and test measurements) shall use an optical switching system, optical source banks with optical detector banks, or combinations of the switches and banks as listed under allowable test setups in table 2102-I. A generic representation of this optical measurement setup with a switching system is shown in figure 2102-1. Test sample configuration shall conform to 4.1 under General Requirements in Part 2 of this Standard Practice.

MEASUREMENT 2102.2

TABLE 2102-I. Table of allowable test setups for change in optical transmittance.

Acceptable test setups	Source End	Detector End
1	Single source, multiple channel switch	Single detector, multiple channel switch
2	Single source, multiple channel switch	Detector bank
3	Optical source bank	Single detector, multiple channel switch
4	Optical source bank	Detector bank

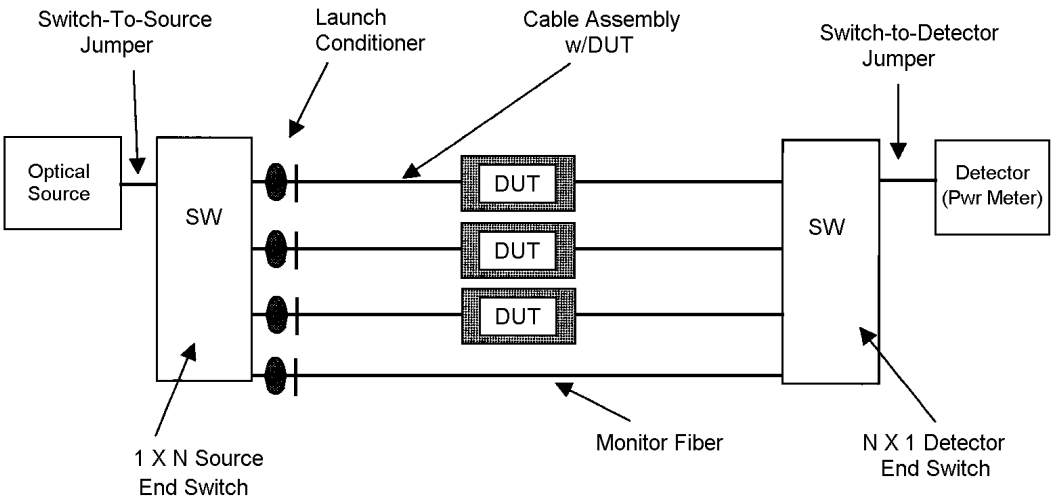

FIGURE 2102-1. Change in optical transmittance: Optical measurement setup.

4.1 Connection at source end. No disconnection of the source end of the test sample (DUT) from the optical source or other source end items in the optical measurement system is permitted during this test. This conformance is further addressed in appendix A.

4.2 Test equipment. Requirements for test equipment compliance are listed in Measurement Support Process 2202.

4.2.1 Use of multiple channel, optical switches. A measurement system that includes optical switches is acceptable for use with this measurement providing the constraints listed in 4.2.1.1 through 4.2.1.7 are met.

4.2.1.1 Verification for repeatability and stability. Switch repeatability is to be 0.03 dB or better for either random or sequential switching. Drift in any switch channel, relative to a designated monitor/reference channel, is to be 0.06 dB or better within the ambient environmental conditions (see 4.2 under General Requirements in Part 2 of this Standard Practice) for a duration of ten days.

4.2.1.2 Fiber size, general. Switches with a smaller fiber size shall not be used.

4.2.1.3 Fiber size, launch end (1xN) switch. Switches with the same fiber size as the DUT shall be used at the launch end switch. Specified launch condition must be obtained at the output port of each channel using the method in Measurement Support Process 2203, Launch Conditions. The test jumper, connecting the optical source to the input port of the switch, shall have the same fiber size as the launch end switch.

4.2.1.4 Fiber size, detector end (Nx1) switch. Switches of the same fiber size as the DUT shall be used at the detector (receive) end switch. The test jumper, connecting the output port of the switch to the power meter/test set, shall have the same fiber size as the detector end switch.

4.2.1.5 Launch condition. Switches shall not reduce the launch condition to be more restrictive than the launch condition specified for the test.

4.2.1.6 Switching speed. Switching speed shall be set so that switch bounce has stabilized and optical power measurements are obtained at a steady state condition.

4.2.1.7 Crosstalk effects. Since only one channel is being measured at a time in an automated, multiplexed switching system, taking each measurement after transitory effects have obtained steady state conditions and not thelight transmission path during the transitory timeframe is the issue to address. Data shall be collected once the optical measurement instrumentation (switch) has settled/stabilized.

4.2.2 Splicing.

4.2.2.1 Allowance. Splicing is permitted to affix the cable assembly, containing or being the DUT, to the test instrumentation. No splice is to be disturbed from the pre-test optical transmittance measurement to the post test optical transmittance measurement.

4.2.2.2 Verification. Test procedure shall be in place and verification shown to demonstrate each splice is low loss and presents a stable connection.

4.2.3 Launch conditions. Launch conditions shall conform to those listed in Measurement Support Process 2203.

4.2.4 Light source(s).

4.2.4.1 Optical source wavelength. Unless otherwise specified, measurements shall be taken at 1,310 nm for single mode fiber and at 1,300 nm for multimode fiber. For aircraft designated components, single mode fiber optic components shall be tested using optical sources at both the 1,310 nm and the 1,550 nm wavelengths. For aircraft designated components, multimode fiber optic components can be tested using an optical source at either the 850 nm or the 1,300 nm wavelength. Current preference is to use the 850 nm wavelength.

4.2.4.2 Optical source coherency. The optical transmittance shall be measured with test equipment for components with multimode fiber using an optical source with non-coherent light (an LED source shall be used, see 6.1.2). Coherent light source (LD) is preferred for components with single mode fiber.

4.2.4.3 Power meter. Power meter shall conform as specified in Measurement Support Process 2202.

4.2.5 Monitor fiber.

4.2.5.1 Allowance. A monitor fiber shall be used unless an allowance is made (see 3.4 in Part 2 of this Standard Practice). In this latter case, a monitor fiber is still preferred.

4.2.5.2 Determination based on source stability. For tests of a short duration (less than 1 hour), a monitor fiber to compensate for optical source stability is not required (based also on detector stability requirement of the power meter listed in Measurement Support Process 2202). For tests of longer duration, a monitor fiber is required.

4.2.6 Verifications.

4.2.6.1 Conformance to requirements for sources optical sources and detectors. Verify conformance to for optical light sources and detection system parameters listed above and in Measurement Support Process 2202.

4.2.6.2 Conformance to requirements for wide area detector. Verify conformance to requirement for a wide area detector when the jumper from the port on the detector end switch to the detector is larger than the fiber size on the DUT. Verification of sufficient detector surface area as stated in Measurement Support Process 2202 is acceptable.

4.2.6.3 Conformance to requirements for wide area detector Verify instrumentation used in the performance of the change in optical transmittance test meets the optical stability requirements (see verification requirements in Measurement Support Process 2202). This verification is to be done and submitted for approval prior to start of testing. The test procedure must list the test equipment to be used. Verification must be submitted for optical stability of the test instrumentation.

4.2.6.4 Verify switch repeatability and stability. Switch repeatability is to be 0.03 dB or better for either random or sequential switching. Drift in any switch channel, relative to a designated monitor/reference channel, is to be 0.06 dB or better within the ambient environmental conditions (see 4.2 under General Requirements in Part 2 of this Standard Practice) for the duration of ten days.

4.2.7 Test fixtures for rectangular backplane connector engagement distance. Test fixtures shall be used to set and maintain the module engagement distance for obtaining optical measurements of rectangular backplane connectors as specified Measurement 2204.

4.2.8 Coupler (splitter) exclusion. A coupler shall not be used as an “optical divider” or branching device. The one exception that is permitted is that a coupler may be used on a measurement system in which the optical return loss is measured along with the optical transmittance. In this one exception only, a one by two coupler may be used with source end instrumentation.

4.2.9 Use of optical source and detector banks. A measurement system that includes optical source banks, optical detector banks or both are acceptable for use with this measurement providing the constraints listed in 4.2.9.1 and 4.2.9.2 are met. A bank is considered to be a configuration where multiple optical sources or multiple detectors are housed within the same enclosure.

4.2.9.1 Fiber size. Each optical source shall be constructed for the size of the optical fiber under test. Each optical detector shall have sufficient surface area to capture all light exiting the fiber to the detector.

4.2.9.2 Performance compliance. Each optical source or each detector in the bank and the stability requirements of the bank shall met the performance requirements specified in Measurement Support Process 2202 for optical sources and power meters. In addition, each optical source or each detector in the bank shall met the other performance requirements specified in Measurement Support Process 2202 for optical sources and power meters.

5. Test procedure.

5.1 Test methods. Change in optical transmittance shall be measured in accordance with method A (transmitted power) of TIA455.20 with the restrictions on the setup and procedure as specified herein. For instance, the setup shall be constrained to that shown in figure 2102-1 and other test setups listed in table 2102-I with the term “divider” limited to a switch and launch conditions restricted to those as specified in Measurement Support Process 2203. The checklist in appendix B is provided to ensure compliance for inspection purposes. Maximum allowed values for selected fiber optic components are tabulated in appendix C. Test setups for connectors with multiple fiber ferrules (such as MT ferrules) shall be restricted to those setups in appendix D.

5.1.1 Not a stand-alone optical test. The change in optical transmittance is not a “stand-alone” test, but performed during various specified mechanical and environmental tests.

5.1.2 Use of a monitor fiber. The change in optical transmittance shall be performed utilizing a monitor fiber to compensate for optical source drift during exposure of the DUT to environment/mechanical and other tests of sufficiently long duration (see 4.2.5 in this Measurement and Measurement Support Process 2202 for requirements/discussion).

5.1.3 Measurements during test, when specified. The periodicity of the measurements shall be sufficient for the mechanical/environmental test performed as approved by the qualifying activity when the periodicity is not specified. Test sample position/orientation during applicable tests, such as ones with mechanical cycling, shall conform as specified in appendix A.

5.2 Test performance. Test shall be performed by taking a pre-test (baseline) measurement followed by either measurements taken both during and after the test (referred to as “during”) or taken only after the test (referred to as “after”).

MEASUREMENT 2102.2

5.2.1 Baseline. A pre-test, optical power (transmittance) measurement is made. This is considered as the baseline measurement.

5.2.2 Subsequent measurements. All optical power measurements, subsequent to the pretest measurement for the test being performed (such as environmental or mechanical), shall be referenced to the pretest measurement.

5.2.3 Calculations. The change in the optical transmittance, calculated in dB, shall be included as part of the data for the mechanical/environmental test to determine compliance to this optical requirement.

5.3 Test performance, sources of error. The intent is to measure change in optical transmittance and eliminate or minimize potential sources of error.

5.3.1 Mating and un-mating during the test. Connections are to be left mated during the test. It is recognized that some specifications state to test “mated and un-mated connections”. Connector performance during the test is to be evaluated under the mechanical/environmental condition imposed; therefore, each DUT must remain mated. Connections are to remain mated from pre-test measurement until after posttest measurement.

5.3.2 Environmental test conditions. These conditions are the specific ambient conditions of temperature and humidity under which the test is to be performed. For change in optical transmittance measurements, the ambient test condition in which the optical test instrumentation is placed, outside of any test apparatus, is relevant and must be specified to verify compliance. Also, the ambient temperature and humidity shall be recorded during the test and listed on the data sheet (as listed under Measurement Support Process 2201). This information is in addition to those required when a test/environmental chamber is used.

5.4 Test synopsis.

5.4.1 Baseline measurement. Perform the baseline or pre-test, optical transmittance measurement prior to initiating the mechanical/environmental test condition.

5.4.2 Subsequent measurements, “during” the test. Perform optical transmittance measurements during the test at the specified test intervals.

5.4.2.1 Cycling type environmental test. When no measurement intervals are specified for an environmental test, at a minimum optical transmittance measurements shall be obtained during each high and low temperature plateaus for each cycle once the temperature has stabilized.

5.4.2.2 Posttest measurement. It is acceptable to wait a maximum of 24 hours for the cable assembly to return to stable/ambient conditions after the conclusion of the test prior to obtaining the posttest measurement. The DUT shall not be disturbed until the posttest measurement is obtained.

5.4.3 Subsequent measurements, “after” the test. Some tests require only the change in optical transmittance after the test. In this case, only the baseline and posttest measurements are required. Optical transmittance measurements may be obtained during the test for engineering informational purposes, but are not to be considered in evaluating the pass/fail criteria.

5.5 Calculation, change in optical transmittance. Calculation shown is one that includes the case with a monitor fiber being used.

5.5.1 Change in optical transmittance (OOT).

$$OOT = DeltaD_i = 10 \log_{10} (P_{ti}/P_{Mi}) - 10 \log_{10} (P_{to}/P_{M0})$$

Where:

P_{t0} = optical power measurement of the DUT/DUT channel before the start of the test (P in units of Watts).

P_{M0} = optical power measurement of the monitor fiber before the start of the test (P in units of Watts).

P_{ti} = optical power measurement of the DUT/DUT channel at a specified point during or after the conclusion of a mechanical or environmental test (P in units of Watts).

P_{Mi} = optical power measurement of the monitor fiber at a specified point during or after the conclusion of a mechanical or environmental test (P in units of Watts).

$DeltaD_I$ = Change in optical transmittance at a specified point during or after the conclusion of a mechanical or environmental test.

Clarifications for designations:

The change in optical transmittance is defined (in accordance with the equation above) as a negative value for a decrease in the transmitted power. A decrease in optical power, from a baseline measurement, is an increase in the optical loss or attenuation.
The subscript "$_o$" = the baseline or pre-test measurement.
The subscript "$_i$" = a specific test measurement in the sequence of the test where "i = 1, 2, 3 …n" and n = the posttest measurement.

5.5.2 Measurement parameter designations. The optical power, P, have different subscripts designations than in TIA455.20. The subscripts have been retained for compatibility with legacy procedures and test reports. The subscripts are now reversed so that that test order precedes the measurement obtained. For instance, P_{to} now becomes P_{ot}. Also, a different form of the equation is shown; however, the two forms are equivalent.

5.5.3 Length normalization measurement. Unless otherwise specified, the change in optical transmittance shall be normalized for optical fiber and for fiber optic cable that are (1) undergoing environmental testing and (2) where the length of the sample exceeds 15 meters or the requirement for optical performance is specified in dB/km. Normalization shall be done for one kilometer.

5.5.4 Reference fiber measurements. Optional reference fiber measurements may be obtained, but may not be used in the denominator or the change in optical transmittance calculation in lieu of the monitor fiber. The cable assembly is supposed to be constructed with already tested components (as this availability is not always the case early in the Military fiber optic QPL program). Any effect seen by a reference fiber should also be referenced to the monitor fiber.

5.6 Data sheet. In addition to the items for the standard data sheet listed in Measurement Support Process 2201, the data sheet shall include 5.6.1 through 5.6.3.

5.6.1 Verification that integrity maintained at optical interfaces. Optical interfaces are not disconnected from before the pre-test measurement until after the posttest measurement. For instance, the instrumentation shall not be disconnected from DUT during test.

5.6.2 Adequate channel identification. Information for each channel, in which a measurement is obtained, is adequate (identifying each DUT, position, monitor, or reference fiber) shall be provided.

5.6.3 Calculations for each measurement. The calculated value for the change in optical transmittance for each during or posttest measurement is required to be provided for the test.

6. Notes.

6.1 Intended use.

MEASUREMENT 2102.2

6.1.1 Loss mechanisms. For single mode, a different loss mechanism dominates each window. Connection losses are greater at the 1,310 nm wavelength. Micro bend sensitivity losses dominate the 1,550 nm wavelength. For multimode, difference in loss at the 850 nm and 1,300 nm wavelength are cable length dependent. This loss is greater at the 850 nm wavelength.

6.1.2 Optical source type. The military specifications may state the optical source wavelength (such as 1,300 nm window) to use, but not the source type (LED, LD, and VCSEL). Some TIA standards specify the use of a non-coherent or non-monochromatic source. In general, an LED source should be used for components tested with multimode fiber. A laser diode (LD, Fabry Perot type) source should be used for components with single mode fiber. An LED source used for testing a component with single mode fiber would provide a more conservative result and is not indicative of the way the component would be used in service. If the component passes using this latter configuration, then the test is valid. If the component fails, then the test would need to be repeated using a LD to determine if it is indeed a failure. Also, a LD source provides too optimistic of a result for components tested with multimode fiber and may lead to unacceptable noise in measurements. For consistency in a multiple component test procedure, the prescription approach dictates the use of an LED source for components tested with multimode fiber and a laser diode (LD) source for components with single mode fiber.

6.2 Sign conventions for transmittance and loss.

6.2.1 Transmittance. An increase or gain in the optical power level is indicated as a positive value. A decrease or loss in the optical power level is indicated as a negative value.

6.2.1.1 Transmittance parameter. The change in optical power level is referred to as the “change in optical transmittance”. The change in optical transmittance is calculated as a negative number when there is a decrease in optical power from the baseline or pre-test measurement.

6.2.1.2 Amplification. Since fiber optic cabling components are passive and have no gain or amplification associated with them, any increase in the optical power level are attributed to factors such as cable stress relaxation, relative movement between mating ferrules or fibers, and mechanical or environmental induced connection material stresses.

6.2.2 Loss. An increase or gain in the optical power level is indicated as a negative value. A decrease or loss in the optical power level is indicated as a positive value.

6.2.2.1 Loss parameter. The decrease in optical power level is referred to by various parameters depending upon how the measurements are performed. Loss parameters include “attenuation”, “optical loss”, “insertion loss”, and “return loss”. The loss is calculated as a positive number for all of these loss parameters when there is a decrease in optical power from the baseline or reference measurement.

6.2.2.2 Attenuation factor. An alternative way to describe loss is as an attenuation factor that is always less than 1. For instance, a loss of 30 dB is one that deceases or attenuates the optical power to a level that is only 1/1000 of the initial power level. Another way to state this decrease is an attenuation factor of 1/1000. Table 2102-II provides examples of loss values with the equivalent attenuation factors.

TABLE 2102-II. Loss with equivalent attenuation factor.

Loss (dB)	Attenuation factor
-3	1/2
-6	1/4
-9	1/8
-10	1/10
-20	1/100
-30	1/1000

6.2.3 Calculation using logarithms. The result is calculated as a negative value if the log of the ratio of reflected power (during or posttest measurement) to incident power (baseline or pre-test measurement) is a fraction less then one (a negative value). Placing a negative sign in front of the logarithmic equation will turn a decrease in optical power into a positive value.

Example:

Given reference measurement = P1 = -10 dBm.
Given test measurement = P2 = -18 dBm.
Optical loss = -10log(P2/P1) = P1–P2 = [-10-(-18)] = 8 dB.

Units of dB should not be confused with units of dBm. Units of dB are power measurement units relative to any stable power level as the reference level. Units of dBm are power measurement units relative to a one milliwatt power level.

MEASUREMENT 2102.2

APPENDIX A

SUPPLEMENTAL DETAILS FOR CHANGE IN OPTICAL TRANSMITTANCE MEASUREMENTS

A.1 Purpose. This appendix addresses supplemental considerations specific to the change in optical transmittance measurements.

A.2 Test sample position. Test sample position during mechanical testing with multiple cycles.

A.2.1 Occurrence. Applicable for mechanical tests in which the position of the test sample is re-positioned or re-oriented during each cycle.

A.2.2 Implementation. Optical measurements are to be obtained at the same position or orientation of the cycle during mechanical testing. If necessary, the cycling may be halted only for the duration required to perform each measurement. The test sample is not to be relaxed while the measurement is performed.

A.3 Integrity of launch conditions. Maintain integrity of launch conditions during change in optical transmittance measurements.

A.3.1 Occurrence. Applicable for mechanical tests and environmental tests in which the change in optical transmittance is measured either only after the test or both during and after the test.

A.3.2 Implementation. The instrumentation attached to the test sample must remain affixed to the test sample to maintain the integrity of the launch conditions. This instrumentation is used to measure the change in optical transmittance. As an example, the test sample may be moved from one chamber to another for the thermal shock test. The instrumentation must not be disconnected from the cable launch end during this move.

MEASUREMENT 2102.2

APPENDIX B

MINIMUM ESSENTIAL CHECKLIST FOR CHANGE IN OPTICAL TRANSMITTANCE MEASUREMENTS

B.1 Purpose. This appendix addresses a checklist of the minimum essentials for the change in optical transmittance measurement.

B.2 Usage. Table 2102 B-I is the checklist of minimum essentials for Government auditors, or their representatives, use during inspections. This checklist should be expanded at the auditor's discretion.

TABLE 2102 B-I. Minimum essential checklist for change in optical transmittance measurements.

Item	Category	Description	Requirement	Compliance
1	Test sample configuration	Cable assembly length: Connectors and splices	10 meters minimum (13 m if to do 3 cut-backs)	
		Optical fiber	1,000 meters minimum	
		Fiber optic cable	500 meters minimum	
2	Room ambient environmental condition	Standard ambient (if test equipment built to operate in this range, if not- then controlled ambient)	23 ± 5°C/73 ± 9°F and 20 to 70 percent RH	
		Controlled ambient	23 ± 2°C/73 ± 4°F and 45 to 55 percent RH	
3	Test condition	Test setup cable routing	Bend diameters ≥ min long term bend diameter	
			Sharp twists and bends avoided	
			Avoid protrusions/other obstacles	
4	Environmental chamber charts test equipment	Temperature and humidity profiles recorded	Chart, stored data on disk, or other approved means	
			Includes chamber model and serial, date of test	
	Test equipment	Pertains to items 5 to 10		
5	Multimode optical source	Source type: LED	Compliance with Measurement Support Process 2203	
		Performance parameters	Compliance with Measurement Support Process 2202	
6	Single mode optical source	Source type: LD	Compliance with Measurement Support Process 2203	
		Performance parameters	Compliance with Measurement Support Process 2202	
7	Power meter	Performance parameters	Compliance with Measurement Support Process 2202	
		Added requirement: Detector size per trigonometric analysis (see detector verification test, Measurement Support Process 2202)	Sufficient active area and placed sufficiently close to the end of the fiber to detect all the radiation emitted from it (captures light – both spatial and angular)	

MEASUREMENT 2102.2

APPENDIX B

TABLE 2102 B-I. Minimum essential checklist for change in optical transmittance measurements - Continued.

Item	Category	Description	Requirement	Compliance
8	Switching system	Repeatability, each switch	≤ 0.03 dB either random or sequential switching	
		Drift relative to monitor channel	0.06 dB for ten days	
		Fiber size in switch	same fiber size as DUT	
		Launch end switch, when use restricted launch	MM: restricted launch device at each output port	
		Launch end switch, single mode	Higher order mode filter at each output port	
		Launch end switch, jumper: source-to-switch	Fiber size same: jumper and switch	
		Detector end switch, jumper: switch-to-detector	Fiber size same: jumper and switch	
9	Monitor fiber	Fiber size	Same as DUT cable assembly	
		Configuration	Between source and detector switches, no DUT inserted, at ambient, or no bends	
10	System (overall)			
	Verify stability	Optical system: 4 hour and 96 hour stability tests Each channel: 1x per minute for 4 hours, every 30 minutes for 96 hours. Find min, max, avg, std dev.	See Measurement Support Process 2202 (< 0.1 dB of optical performance requirement)	
	Launch conditions	Pertains to items 11 to 13		
11	Multimode	Overfilled launch	Not Applicable (N/A) for this test	
12	Multimode	Restricted launch	Compliance with Measurement Support Process 2203	
13	Single mode	Reduce higher order modes	Compliance with Measurement Support Process 2203	
14	Test setup	Items to inspect for compliance	Setup: (source-S sw.-DUT-d. sw.-detector)	
			Splicing of cable assembly: to sw./instr. only	
			Restricted launch at source end of each DUT/each channel	
		Items to minimize variation in test	Secure/tie down cables (no move at instr. ports)	
			No sharp bend in cable from DUT	
			Use of substantial fixtures (no wobbling)	
		Splicing allowance	Affix DUT cable assembly to switch	
			Do not disturb from pre-test to post test	
			Verify each splice is low loss and stable	

MEASUREMENT 2102.2

APPENDIX B

TABLE 2102 B-I. Minimum essential checklist for change in optical transmittance measurements - Continued.

Item	Category	Description	Requirement	Compliance
15	Test procedure	Approved test procedure	Compliance with Measurement Support Process 2201	
		Maintain setup during test (source end)	No detachment of DUT cable from source	
		Maintain pre-test baseline	No de-mate during test	
		Perform pre-test (baseline) measurement	Prior to mechanical/environmental conditions	
		Perform measurements during (when specified)	at specified interval, if not see 5.4.2.1 and appendix A of Measurement 2102	
		Perform posttest measurement after test	Complete after conditions are stable (wait up to 24 hr)	
16	Calculation	Equation to give value in dB	Verify proper method if operator performed	
		Normalize for length (environ for cable and fiber)	Units in dB/km (normalized for 1 km length)	
		Sign convention	Recorded as + value, if increase in optical power.	
17	Data sheet	Approved data sheet	Compliance with Measurement Support Process 2201	
			Method used to do restricted launch condition	
			Each DUT/channel/position identified	
			All during/after measurements calculated on sheet.	
18	Pass/fail criteria	Proper criteria specified	Conforms with military specification parameters and values	
		Proper criteria implemented	Test operators knows if fail and to verify result	

B.3 Notes.

B.3.1 Intended use.

B.3.1.1 Audit team. This checklist is intended to assist Government auditors or their representatives during inspections of the optical measurement system. This checklist may be augmented at the auditor's discretion; however, it is not to be reduced.

B.3.1.2 Test laboratories. When test laboratories prepare to perform optical measurements or audits, this checklist should be used to supplement Measurement 2102, not replace it.

MEASUREMENT 2102.2

APPENDIX C

MAXIMUM ALLOWED VALUES FOR CHANGE IN OPTICAL TRANSMITTANCE MEASUREMENTS

C.1 Purpose. This appendix provides in tabular format the maximum allowed values for change in optical transmittance that are specified in various military fiber optic component specifications.

C.2. APPLICABLE DOCUMENTS

C.2.1 General. The documents listed in this section are specified in sections 3, 4, and 5 of this standard practice. This section does not include documents cited in other sections of this standard practice or recommended for additional information or as examples. While every effort has been made to ensure the completeness of this list, document users are cautioned that they must meet all specified requirements of documents cited in sections 3, 4, and 5 of this standard practice, whether or not they are listed.

C.2.2 Government documents.

C.2.2.1 Specifications, standards, and handbooks. The following specifications, standards, and handbooks form a part of this document to the extent specified herein. Unless otherwise specified, the issues of these documents are those cited in the solicitation or contract.

DEPARTMENT OF DEFENSE SPECIFICATIONS

MIL-PRF-24623	-	Splice, Fiber Optic Cable, General Specification for (Metric).
MIL-PRF-29504	-	Termini, Fiber Optic Connectors, Removable, General Specification for.
MIL-PRF-28876	-	Connectors, Fiber Optic Circular, Plug and Receptacle Style, Multiple Removable Termini, General Specification for.
MIL-PRF-64266	-	Connectors, Fiber Optic, Circular, Plug and Receptacle Style, Multiple Removable Genderless Termini, Environment Resisting General Specification For
MIL-DTL-83522	-	Connectors, Fiber Optic, Single Termini, General Specification for.

(Copies of these documents are available online at https://quicksearch.dla.mil.)

C.2.2.2 Other Government documents, drawings, and publications. The following other Government documents, drawings, and publications form a part of this document to the extent specified herein. Unless otherwise specified, the issues of these documents are those cited in the solicitation or contract.

NAVSEA Drawing 8283255	-	Termini, Fiber Optic, MIL-PRF-29504/4 and MIL-PRF-29504/5, Test Sample Configurations/Fabrication and Specific Methods/Practices.
NAVSEA Drawing 8283458	-	Termini, Fiber Optic, MIL-PRF-29504/14 and MIL-PRF-29504/15, Test Sample Configuration/Fabrication and Specific Methods/Practices.
NAVSEA Drawing 8283460	-	Termini, Fiber Optic, MIL-PRF-29504/18, Test Sample Configurations/ /Fabrication and Specific Methods/Practices.

A copy of the NAVSEA Drawings can be obtained at web site: https://fiberoptics.nswc.navy.mil/ in the NAVSEA Drawing section under Component Information. If unable to access this Web Site, request an application by e-mail to NSWC DD Warfare Systems Department at DLGR_NSWC_Foweb@navy.mil.

C.2.3 Order of precedence. Unless otherwise noted herein or in the contract, in the event of a conflict between the text of this document and the references cited herein, the text of this document takes precedence. Nothing in this document, however, supersedes applicable laws and regulations unless a specific exemption has been obtained.

MEASUREMENT 2102.2

APPENDIX C

C.3 Pass/fail criteria. The change in optical transmittance will not exceed the value (optical power level) specified during or after the test performed (such as environmental or mechanical).

C.4 Intended use. Table 2102 C-I provides pass/fail criteria to assist Government auditors, or their representatives, during documentation reviews (such as test procedures and test reports) and inspections. Revisions to the military specifications supersedes any values found in table 2102 C-I.

TABLE 2102 C-I. Maximum allowed change in optical transmittance.

DUT (Termini, connector, splice, fiber, cable)		Maximum allowable change in optical transmittance (dB unless noted)	
Specification	Component description	Mechanical tests	Environmental tests
MIL-PRF-29504	Termini	0.5	0.5
MIL-PRF-28876	Connector, multiple termini	0.5	0.5
MIL-DTL-83522	Connector, single ferrule	0.5	0.5
MIL-PRF-24623	Splice	0.3	0.3
MIL-PRF-49291, multimode, graded index and step index	Optical fiber	0.5	0.5
MIL-PRF-49291, single mode, dispersion shifted and dispersion unshifted	Optical fiber	0.3	0.3
MIL-PRF-64266	Connector, multiple termini	0.5	0.5
MIL-PRF-85045, multimode	Fiber optic cable 2/	0.5 3/	0.5 dB/km 1/
MIL-PRF-85045, single mode	Fiber optic cable 2/	0.2 3/	0.3 dB/km 1/

1/ The change in optical transmittance requirement for freezing water immersion, gas flame, and shock are for the specified test length and shall not be normalized for one kilometer.
2/ Aerospace fiber/cables used are to be specified by NAVSEA Drawing 8283255, 8283258 or 8283460, as applicable.
3/ Aerospace requirements have not been specified to date.

MEASUREMENT 2102.2

APPENDIX D

CHANGE IN OPTICAL TRANSMITTANCE MEASUREMENTS FOR CONNECTORS WITH MULTIPLE FIBER FERRULES

D.1 Purpose. This appendix provides acceptable test setups that are to be used only when performing change in optical transmittance measurement for a connectors with multiple fiber ferrules (such as MT ferrules). This appendix does not apply to other component/DUT configurations (such as connectors with single fiber ferrule termini and single fiber ferrule connectors). Otherwise, this appendix augments sections 4 and 5 of Measurement 2102 for connectors with multiple fiber ferrules.

D.2 Allowed test setups. The change in optical transmittance measurements for connectors with multiple fiber ferrules shall be performed using one of the test setups as specified in D.2.1 through D.2.3.

D.2.1 Multiple channel switches (source & detector ends). Setup 1 shall be used. Setup in figure 2102 D-1 shall be used for obtaining optical transmittance measurements for a connector mated pair with multiple fiber ferrules when the test instrumentation includes an optical source, a source end optical switch, a detector end optical switch and a detector (power meter).

D.2.2 Multiple Port Source and Detector Banks (source & detector ends). Setup 2 shall be used. Setup in figure 2102 D-2 shall be used for obtaining optical transmittance measurements for a connector mated pair with multiple fiber ferrules when the test instruments are multiple port source and detector banks.

D.2.3 Other allowed test setups. At the source end, either an optical source or an optical source with a multiple channel (1 x N) switch may be used. At the detector end, a detector bank or single detector with a multiple channel (1 x N) switch may be used. When specified as another alternative, an integrated sphere detector. See table 2102 D-I for allowable test setups at the source end and at the detector end.

TABLE 2102 D-I. Table of allowable test setups for change in optical transmittance, connectors with MT ferrules.

Acceptable test setups	Source End	Detector End
1	Single source, multiple channel switch	Single detector, multiple channel switch
2	Single source, multiple channel switch	Detector bank
3	Single source, multiple channel switch	Integrating sphere detector
4	Optical source bank	Single detector, multiple channel switch
5	Optical source bank	Detector bank

D.3.3 Allowance for source end connector transition (reference) cables. Connector transition (reference) cables at the source end, at the detector end or both are optional (allowed, but less preferred). For multimode cable assemblies, use of a source end connector transition cable is contingent upon not impacting the target launch condition. See figure 2102 D-2 for example of a setup that shows inclusion of both source end and detector end connector transition (reference) cables.

D.4 Notes.

D.4.1 Figure similarity. Figure 2102-1 with one optical source, a source end switch, one detector and a detector end switch, is the same setup as shown in figure 2101 D-1, but figure 2101 D-1 has been enhanced for a DUT with multiple fiber ferrules and contains additional clarifying leader notes for connectors with multiple fiber ferrules.

MEASUREMENT 2102.2

APPENDIX D

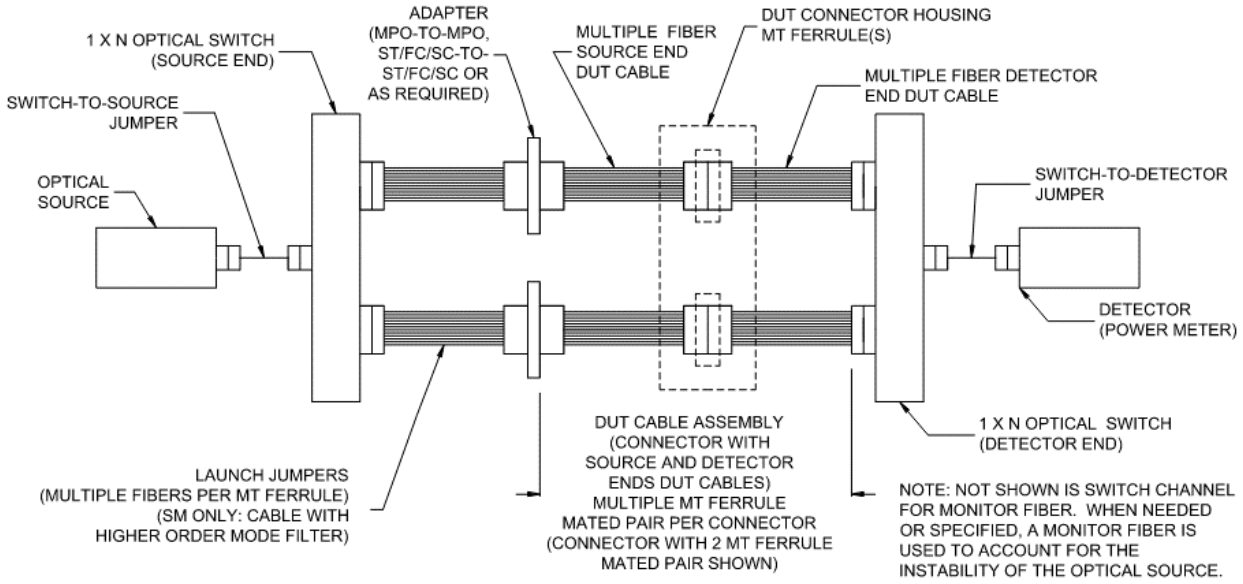

FIGURE 2102 D-1. Setup 1: Multiple channel switches (source & detector ends)

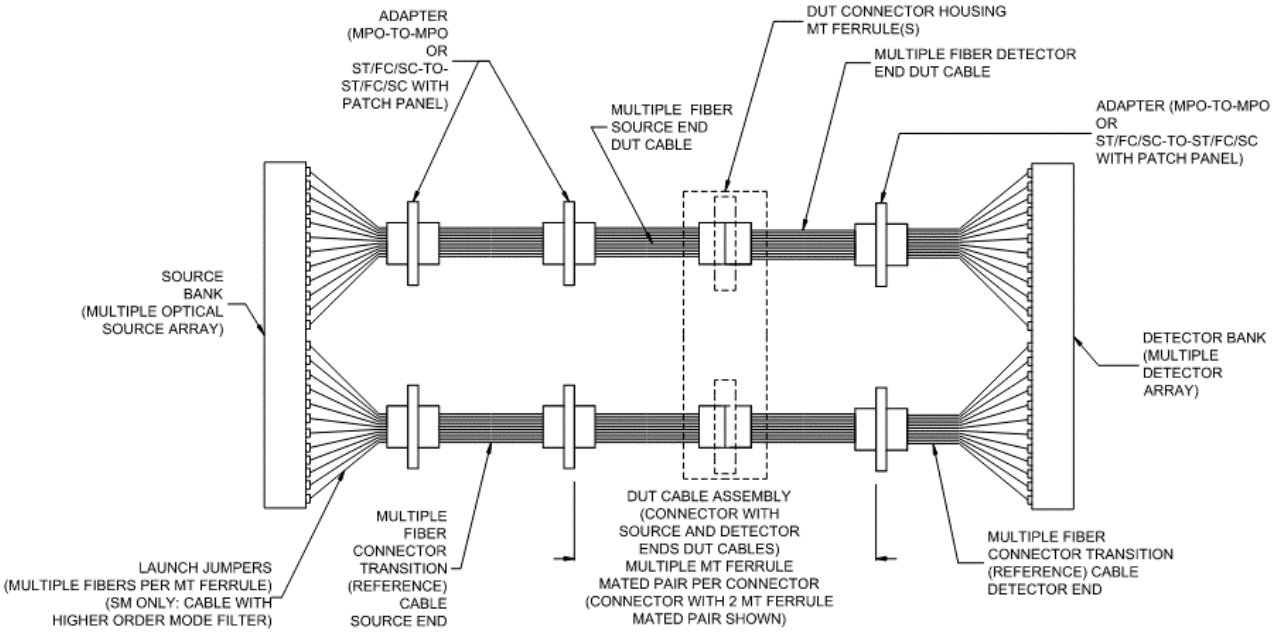

FIGURE 2102 D-2. Setup 2: Multiple Port Source and Detector Banks (source & detector ends)

MEASUREMENT 2103.2

OPTICAL CROSSTALK

1. Purpose. This measurement is performed when there is the requirement for a multiple channel component (such as a multiple fiber cable or a multiple termini connector) to take measurements of two passive channels adjacent to an active channel. Depending upon the type of component tested, either each passive channel or the sum of the passive channels measured must be below a specified power level. Measurement 2103 is intended to standardize on the performance of this measurement, as specified in a commercial standard (TIA455.42), by imposing further refinements or boundaries (constraints). To ensure that the risk to the Government of accepting bad optical measurement data is small, to minimize test variations and to permit more accurate comparison of test results from multiple sources, a prescription approach is specified for the optical instrumentation used to obtain this measurement.

1.1 Measurement 2103 with revision designator. See 1.3 and 1.4 in Part 2 of this Standard Practice (material in beginning of Part 2) to identify the Measurement number from the revision designator and method to reference this Measurement in other documents.

2. APPLICABLE DOCUMENTS

2.1 General. The documents listed in this section are specified in sections 3, 4, and 5 of this standard practice. This section does not include documents cited in other sections of this standard practice or recommended for additional information or as examples. While every effort has been made to ensure the completeness of this list, document users are cautioned that they must meet all specified requirements of documents cited in sections 3, 4, and 5 of this standard practice, whether or not they are listed.

2.2.1 Non-Government publications. The following documents form a part of this document to the extent specified herein. Unless otherwise specified, the issues of these documents are those cited in the solicitation or contract.

TELECOMMUNICATIONS INDUSTRY ASSOCIATION

TIA455.42 - Optical Crosstalk in Fiber Optic Components.

(Copies are available online at http://www.tiaonline.org/standards/catalog/index.cfm or from TIA, 2500 Wilson Boulevard, Suite 300, Arlington, VA 22201, USA, ATTN: Standards Department.)

2.3 Order of precedence. Unless otherwise noted herein or in the contract, in the event of a conflict between the text of this document and the references cited herein, the text of this document takes precedence. Nothing in this document, however, supersedes applicable laws and regulations unless a specific exemption has been obtained.

3. Definitions.

3.1 Active channel. One single fiber cable, in a multiple fiber cable or affixed to a multiple termini connector, to which a light source is transmitting optical power through that cable.

3.2 Crosstalk. The amount of optical power received in one or more adjacent passive channels from that transmitted in an active channel.

3.3 Passive channel. One single fiber; in a ribbon, multiple fiber cable, or affixed to a multiple termini connector; to which a light source is not transmitting any optical power through that cable.

4. Setup. A generic representation of this optical measurement setup is shown in figure 2103-1 to test a multiple fiber cable and in figure 2103-2 to test a multiple termini connector. Test sample configuration shall conform to 4.1 in Part 2 of this Standard Practice. When testing a multiple fiber cable without connectors, the test sample length shall be 0.5 km versus the 20 meter length specified in TIA455.42. When testing a multiple termini connector, the cable assembly length shall be a minimum of 10 meters versus the 20 meter length stated in TIA455.42.

4.1 No switches. For crosstalk, optical source and detector are to be connected directly to the DUT (cable for a cable DUT or cable assembly for connector/splice DUT). See figure 1 and figure 2 in TIA455.42. Test sample/DUT is connected directly from source to power meter. No intermediary devices, such as switches, that contribute additional sources of error are used.

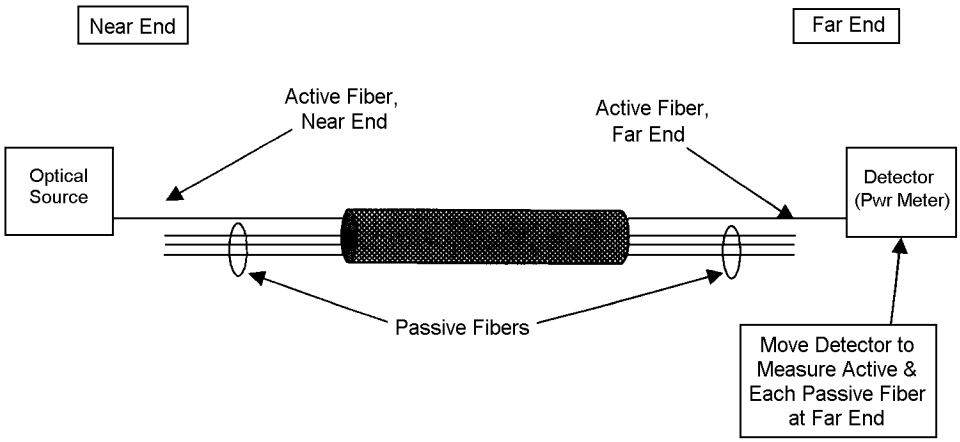

FIGURE 2103-1. Crosstalk measurement for cable.

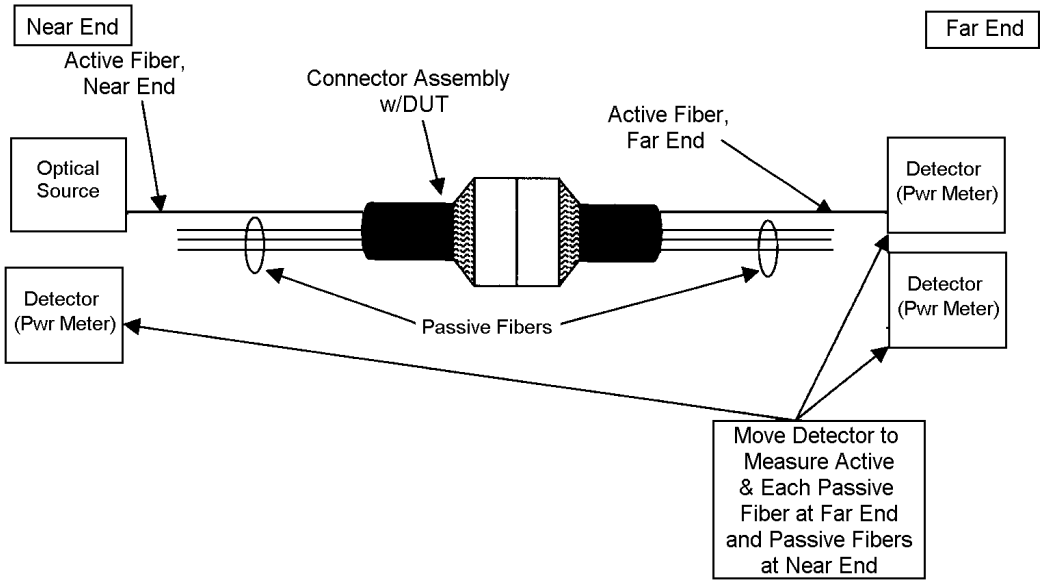

FIGURE 2103-2. Crosstalk measurement for connectors.

4.2 Connection at source end. No disconnection of the source end of the test sample from the source is permitted during this test until that fiber/channel is no longer the one connected to the optical source (active channel).

4.3 Test equipment. Requirements for test equipment shall be in compliance with Measurement Support Process 2202.

4.3.1 Launch conditions. Requirements for launch conditions shall be in compliance with Measurement Support Process 2203.

4.3.1.1 Multimode configuration. The overfilled launch condition shall be used. For the multiple termini connector test sequence, crosstalk may be performed after the initial insertion loss using an overfilled launch condition, but prior to the initial insertion loss using a restricted launch condition.

4.3.1.2 Single mode configuration. A mandrel with diameter specified in Measurement Support Process 2203 shall be used.

4.3.2 Light source(s). Requirements for parameters specified for the change in optical transmittance and insertion loss tests specified in Measurement Support Process 2202 shall apply.

4.3.2.1 Optical source wavelength. Unless otherwise specified, cross talk measurements shall be taken at 1,310 nm for single mode fiber and at 1,300 nm for multimode fiber. For aircraft designated components, the following optical source wavelength constraints shall be used. Single mode fiber optic components shall be tested using optical sources at both the 1,310 nm and the 1,550 nm wavelengths. Multimode fiber optic components can be tested using an optical source at either the 850 nm or the 1,300 nm wavelength. Current preference is to use the 850 nm wavelength.

4.3.2.2 Optical source type. The crosstalk test for components with multimode fiber is to be done using an optical source with non-coherent light (an LED source shall be used). Also, a non-coherent light source (an LED source) shall be used for components with single mode fiber.

4.3.2.3 Power meter. Requirement parameters specified for the change in optical transmittance and insertion loss tests specified in Measurement Support Process 2202 shall apply with one additional requirement. A more restrictive requirement for the optical noise floor as specified in 4.3.3.1 shall apply.

4.3.3.1 Power level of noise floor. The power level obtained on the active channel shall be at least 60 dB above the noise floor to do the measurement. On power meters with simple circuitry, the display shall follow the noise power level at the noise floor and not remain constant or hold a value. On power meters with more complex circuitry, the electronics integrates over a sufficiently long time constant to stabilize the displayed value. Measurements can be taken close to the power level at the noise floor.

4.3.3.2 Verification. Verification shall be performed to show test equipment conformance for sufficient detector sensitive to detect the optical signal. Note that the power in the active channel must be 60 dB above the noise floor of the detector versus the 40 dB requirement specified in TIA455.42.

4.3.3.3 Verification calculations. The method provided by example in appendix A shall be used to determine if sufficient power exists to do crosstalk measurements.

4.3.4 Verifications.

4.3.4.1 Verify conformance to requirements for optical light sources and detection system parameters listed above and as specified in Measurement Support Process 2202.

4.3.4.2 Verify conformance of optical power meter to requirements at the noise floor (as shown by example in appendix A).

4.3.5 Test fixtures for rectangular backplane connector engagement distance. Test fixtures shall be used to set and maintain the module engagement distance for obtaining optical measurements of rectangular backplane connectors as specified Measurement 2204.

MEASUREMENT 2103.2

5. Test procedure. The crosstalk measurement shall be measured in accordance with TIA455.42. For multiple fiber cable, the crosstalk shall be determined between a minimum of three randomly selected fibers in a multiple fiber cable, using each selected fiber sequentially as the actively transmitting element, and measuring the far-end power output of all other fibers in the cable specimen. For a multiple termini connector, test all other channels in the DUT (the passive channels) relative to the active channel. Determine both the far end and the near end crosstalk of two passive channels, in accordance with the crosstalk calculation, relative to the designated active channel and to the test fiber. The checklist in appendix B is provided to ensure compliance for inspection purposes. Maximum allowed values for selected fiber optic components are tabulated in appendix C.

5.1 Test synopsis. Obtain the measurement for the parameters specified for the multiple termini connector or fiber optic cable, as applicable (see Crosstalk calculations below).

5.1.1 Cable.

5.1.1.1 Select, at random, one fiber in the cable and connect an optical source to one end (designated the near end).

5.1.1.2 Measure the optical power of this “active fiber” at the other end (designated the far end) of the cable using an approved power meter (see above).

5.1.1.3 Measure the far end optical power at the far end for all the other fibers in the cable. These other fibers (channels) are to be passive (not having an activated optical source at the near end).

5.1.1.4 Separately determine the far end crosstalk of each passive channel relative to the designated active channel.

5.1.1.5 Calculate the crosstalk.

5.1.1.6 Repeat this process for a minimum of three, randomly selected, active fibers.

5.1.2 Multiple termini connector.

5.1.2.1 Select, at random, one fiber in the connector assembly (DUT) and connect an optical source to one end (designated the near end).

5.1.2.2 Measure the optical power of this “active fiber” at the other end (designated the far end) of the DUT using an approved power meter (see 4.3 above).

5.1.2.3 Measure both the near end and the far end optical power for two randomly selected fibers in the DUT that are adjacent to the active fiber. These other fibers (channels) are to be passive (not to have an activated optical source at the near end).

5.1.2.4 Calculate the crosstalk. Determine both the far end and the near end crosstalk of two passive channels, in accordance with crosstalk calculation, relative to the designated active channel and to the test fiber.

5.1.2.5 Repeat this process for a minimum of three, randomly selected, active fibers.

5.1.3 Test fiber. To account for the inherent crosstalk in the cable when the DUT is a multiple termini connector, a measurement may be taken from a separate test fiber with the same cable type and length, but without an inserted connector

5.2 Crosstalk calculations.

MEASUREMENT 2103.2

5.2.1 Test equation parameters. The parameters for the equations to calculate the near end and far end crosstalk for both cable and for connecting devices inserted into cable are as follows:

a. Where the parameters for cable are as follows (where the power is measured in units of Watts):

P_r Output power of cable (i.e., power of the active channel measured at the output/far end)
$P_{b[j]}$ Near end output power of the test fiber channel [j]
$P_{b[k]}$ Near end output power of the test fiber channel [k]
$P_{f[j]}$ Far end output power of the test fiber channel [j]
$P_{f[k]}$ Far end output power of the test fiber channel [k]

b. Where the parameters for Multi Terminus Connector (DUT) are as follows (where the power is measured in units of Watts): (and DUT = connecting device inserted, designated by subscripts “bi” or “fi” where “i” stands for “inserted” and is not an incremented variable)

P_b Near end output power of the test fiber (with no DUT inserted)
P_f Far end output power of the test fiber (with no DUT inserted)
$P_{bi[j]}$ Near end output power of the test fiber with DUT channel [j]
$P_{bi[k]}$ Near end output power of the test fiber with DUT channel [k]
$P_{fi[j]}$ Far end output power of the test fiber with DUT channel [j]
$P_{fi[k]}$ Far end output power of the test fiber with DUT channel [k]
P_r Output power of DUT (i.e., power of the active channel measured at the output/far end)

c. And where the crosstalk variants are designated as follows:

CT_f Inherent far end crosstalk of the cable sample
CT_b Inherent near end crosstalk of the cable sample
CT_{fi} Far end crosstalk of the DUT
CT_{bi} Near end crosstalk of the DUT

5.2.2 The crosstalk should be calculated, using the TIA parameter designations, as follows:

a. For cable: The far end crosstalk between any two fibers shall be not greater than -60 dB below the active fiber optical output level.

Implementation: Determine the far end crosstalk of each passive channel relative to the designated active channel separately. Equations below illustrate how to perform the calculations for two of the channels in the cable.

Far end crosstalk of the cable sample:
Far end crosstalk of channel [j] = $CT_{f[j]}$ (dB) = $-10 \log_{10} [(P_{f[j]})/P_r]$

Far end crosstalk of channel [k] = $CT_{f[k]}$ (dB) = $-10 \log_{10} [(P_{f[k]})/P_r]$.

The requirement is that $CT_{f[j]}$ (dB) and $CT_{f[k]}$ (dB) separately must not be greater than –60 dB. Currently, there is no near end crosstalk requirement for the cable sample.

b. For cable with a connecting device (connector/splice): When connectors with more than 3 channels are tested, the sum of the signal power levels of two passive channels adjacent to the active channel, shall be below the signal level of the active channel by at least 60 dB.

Implementation: Test all other channels in the DUT (such as the passive channels) relative to the active channel. Determine both the far end and the near end crosstalk of two passive channels, in accordance with crosstalk calculation, relative to the designated active channel and to the test fiber.

Far end crosstalk of each channel in the DUT:
CT_{fi} (dB) = $-10 \log_{10} [(P_{fi} - P_f)/ P_r]$

Near end crosstalk of each channel in the DUT:
CT_{bi} (dB) = $-10 \log_{10} [\{(P_{bi} - P_b)/P_r]$

Far end crosstalk of two passive DUT channels ([j] and [k]) relative to an active DUT channel:
$CT_{fi[j,k]}$ (dB) = $-10 \log_{10} [\{(P_{fi[j]} - P_f)+(P_{fi[k]} - P_f)\}/ P_r]$

Near end crosstalk of the DUT:
$CT_{bi[j,k]}$ (dB) = $-10 \log_{10} [\{(P_{bi[j]} - P_b)+(P_{bi[k]} – P_b)\}/ P_r]$

5.3 Data sheet. In addition to the items for the standard data sheet specified in Measurement Support Process 2201, the data sheet shall list the items in 5.3.1 through 5.3.3.

5.3.1 Each measured optical power value.

5.3.2 Each channel (identifying each DUT or position).

5.3.3 The calculated crosstalk values required.

6. Notes.

6.1 Intended use.

6.1.1 Loss mechanisms. For single mode, a different loss mechanism dominates each window. Connection losses are greater at the 1,310 nm wavelength. Micro bend sensitivity losses dominate the 1,550 nm wavelength. For multimode, difference in loss at the 850 nm and 1,300 nm wavelength are cable length dependent. This loss is greater at the 850 nm wavelength.

MEASUREMENT2103.2

APPENDIX A

CALCULATION FOR SUFFICIENT OPTICAL POWER LEVEL

A.1 Purpose. This appendix provides an example for determining if there is sufficient power or sensitivity to perform a crosstalk measurement.

A.2 Sample calculation.

Passive channel. Power level recorded = 0.09 x E -9 W.
10 log ([0.09 x E –9]/E-3) = -70.5 dBm

Active channel. Power level recorded = 22.14 x E -6 W.
10 log 0.02214 = -16.5 dBm

Subtract active power level from passive power level.

```
  -70.5  dBm
 -(-16.5) dBm
   54    dBm
```

Since 54 dBm < 60 dBm, the optical measurement instrumentation does not have a sufficient range to do crosstalk measurements.

A.3 Reiteration of test equipment verifications required.

A.3.1 Verify conformance to requirements for optical light source and power meter parameters.

A.3.2 Verify sufficiently low noise floor to adequately measure for crosstalk.

MEASUREMENT 2103.2

APPENDIX B

MINIMUM ESSENTIAL CHECKLIST FOR OPTICAL CROSSTALK MEASUREMENTS

B.1 Purpose. This appendix addresses a checklist of the minimum essentials for the optical crosstalk measurement.

B.2 Usage. Table 2103 B-I is the checklist of minimum essentials for Government auditors, or their representatives, use during inspections. This checklist should be expanded at the auditor's discretion.

TABLE 2103 B-I. Minimum essential checklist for optical crosstalk measurements.

Item	Category	Description	Requirement	Compliance
1	Test sample configuration	Cable assembly length: Connectors	10 meters minimum (13 m if to do 3 cut-backs)	
		Fiber optic cable	500 meters minimum	
2	Room ambient environmental condition	Standard ambient (if test equipment built to operate in this range, if not-then controlled ambient)	23 ± 5ºC/73 ± 9ºF and 20 to 70 percent RH	
		Controlled ambient	23 ± 2ºC/73 ± 4ºF and 45 to 55 percent RH	
3	Test condition	Test setup cable routing	Bend diameters ≥ min long term bend diameter	
			Sharp twists and bends avoided	
			Avoid protrusions/other obstacles	
4	Environmental chamber charts	Temperature and humidity profiles recorded	Chart, stored data on disk, other approved means	
			Includes chamber model and serial, date of test	
	Test equipment	Pertains to items 5 to 7		
5	Multimode optical source	Source type: LED	Compliance with Measurement Support Process 2203	
		Performance parameters	Compliance with Measurement Support Process 2202	
6	Single mode optical source	Source type: LD	Compliance with Measurement Support Process 2203	
		Performance parameters	Compliance with Measurement Support Process 2202	
7	Power meter	Performance parameters	Compliance with Measurement Support Process 2202	
		Added requirement: Detector size per trigonometric analysis (see detector verification test, Measurement Support Process 2202)	Sufficient active area and placed sufficiently close to the end of the fiber to detect all the radiation emitted from it (captures light – both spatial and angular)	
		Added requirement: optical noise floor	-60 dB minimum above noise floor (do calculation)	

MEASUREMENT 2103.2

APPENDIX B

TABLE 2103 B-I. Minimum essential checklist for optical crosstalk measurements - Continued.

Item	Category	Description	Requirement	Compliance
	Launch conditions	Pertains to items 8 to 10		
8	Multimode	Overfilled launch	Compliance with Measurement Support Process 2203	
9	Multimode	Restricted launch	Not Applicable (N/A) for this test	
10	Single mode	Reduce higher order modes	Compliance with Measurement Support Process 2203	
11	Test setup	Items to inspect for compliance	No switching system (source-DUT-detector)	
			No splicing of cable assembly	
			Restricted launch at source end of each DUT/each channel	
		Items to minimize variation in test	Secure/tie down cables (no movement at instrument ports)	
			In line approach to and from connection for mates	
			Use of substantial fixtures (no wobbling).	
	Test procedure	Approved test procedure	Compliance with Measurement Support Process 2201	
12	General	Maintain setup during test (source end)	No detachment of DUT cable from source	
		Use correct detector (Power meter = pwr mtr)	Verify -60 dB min above noise floor (do calculation)	
		Designate source and detector ends of DUT	Source = near end (near), detector = far end (far)	
13	Test procedure, cable	Measure optical power of active channel	Source at near, detector at far of channel	
		Measure far end opt power, all other channels	Move detector to measure each “passive” channel,	
			Leave source at “active” channel	
		Calculate crosstalk of each passive channel	Calculation near and far end relative to active channel	
			Separate calc for each channel near and each channel far	
		Repeat process	Minimum of 3, random selected, active fibers	
14	Test procedure, connectors (multiple termini)	Measure optical power of active channel	connectors	
		Measure far and near optimum power, all other channels	(multiple termini)	
			Leave source at “active” channel	
		Calculate crosstalk of two passive channel	Far and near end relative to active channel and test fiber	
			Far end and near end done in separate calculations	
		Repeat process	Minimum of 3, random selected, active fibers	
15	Calculation	Equation to give value in dB	Verify proper method if operator performed	
		Each channel listed	Far and, if specified, near end crosstalk calculated	
16	Data sheet	Approved data sheet	Compliance with Measurement Support Process 2201	
			Each measured optical power value	
			Each channel (identifying each DUT, position)	
			Calculated crosstalk values	
17	Pass/fail criteria	Proper criteria specified	Conforms with MIL-SPEC parameters and values	
		Proper criteria implemented	Test operators knows if fail and to verify result	

MEASUREMENT 2103.2

APPENDIX B

B.3 Notes.

B.3.1 Intended use.

B.3.1.1 Audit team. This checklist is intended to assist Government auditors or their representatives during inspections of the optical measurement system. This checklist may be augmented at the auditor's discretion; however, it is not to be reduced.

B.3.1.2 Test laboratories. When test laboratories prepare to perform optical measurements or audits, this checklist should be used to supplement Measurement 2103, not replace it.

MEASUREMENT 2103.2

APPENDIX C

MAXIMUM ALLOWED VALUES FOR OPTICAL CROSSTALK MEASUREMENTS

C.1 Purpose. This appendix provides in tabular format the maximum allowed values for optical crosstalk that are specified in various military fiber optic component specifications for fiber optic cable and multiple termini connectors.

C.2. APPLICABLE DOCUMENTS

C.2.1 General. The documents listed in this section are specified in sections 3, 4, and 5 of this standard practice. This section does not include documents cited in other sections of this standard practice or recommended for additional information or as examples. While every effort has been made to ensure the completeness of this list, document users are cautioned that they must meet all specified requirements of documents cited in sections 3, 4, and 5 of this standard practice, whether or not they are listed.

C.2.2 Government documents.

C.2.2.1 Specifications, standards, and handbooks. The following specifications, standards, and handbooks form a part of this document to the extent specified herein. Unless otherwise specified, the issues of these documents are those cited in the solicitation or contract.

DEPARTMENT OF DEFENSE SPECIFICATIONS

MIL-PRF-28876	-	Connectors, Fiber Optic Circular, Plug and Receptacle Style, Multiple Removable Termini, General Specification for.
MIL-PRF-64266	-	Connectors, Fiber Optic, Circular, Plug and Receptacle Style, Multiple Removable Genderless Termini, Environment Resisting General Specification for
MIL-PRF-85045	-	Fiber Optic Cables (Metric), General Specification for.

(Copies of these documents are available online at https://quicksearch.dla.mil.)

C.2.3 Order of precedence. Unless otherwise noted herein or in the contract, in the event of a conflict between the text of this document and the references cited herein, the text of this document takes precedence. Nothing in this document, however, supersedes applicable laws and regulations unless a specific exemption has been obtained.

C.3 Pass/fail criteria.

C.3.1 MIL-PRF-28876/MIL-PRF-64266: When connectors with 3 or more channels are tested, the signal power levels, or sum of levels of the passive channel or channels, will be below the signal level of the active channel by at least 60 dB.

C.3.2 MIL-PRF-85045: The far end crosstalk between any two fibers will be not greater than -60 dB below the active fiber optical output level.

C.4 Intended use. C.3 provides pass/fail criteria to assist Government auditors, or their representatives, during documentation reviews (such as test procedures and test reports) and inspections. Revisions to the military specifications supersede any values found in C.3.

MEASUREMENT 2104.4

OPTICAL SIGNAL DISCONTINUITY

1. Purpose. This measurement is performed when there is the requirement to determine if an optical signal discontinuity has occurred. The optical signal discontinuity occurs if the optical power falls below the specified level of reduction in optical transmittance for a time interval beyond the specified duration. This measurement is taken in conjunction with a mechanical event such as during mechanical shock or vibration testing. Measurement 2104 is intended to standardize on the performance of this measurement, as specified in a commercial standard (TIA455.32), by imposing further refinements or boundaries (constraints). To ensure that the risk to the Government of accepting bad optical measurement data is small, to minimize test variations and to permit more accurate comparison of test results from multiple sources, a prescription approach is specified for the optical instrumentation used to obtain this measurement.

1.1 Measurement 2104 with revision designator. See 1.3 and 1.4 in Part 2 of this Standard Practice (material in beginning of Part 2) to identify the Measurement number from the revision designator and method to reference this Measurement in other documents.

2. APPLICABLE DOCUMENTS

2.1 General. The documents listed in this section are specified in sections 3, 4, and 5 of this standard practice. This section does not include documents cited in other sections of this standard practice or recommended for additional information or as examples. While every effort has been made to ensure the completeness of this list, document users are cautioned that they must meet all specified requirements of documents cited in sections 3, 4, and 5 of this standard practice, whether or not they are listed.

2.2 Non-Government publications. The following documents form a part of this document to the extent specified herein. Unless otherwise specified, the issues of these documents are those cited in the solicitation or contract.

ELECTRONIC COMPONENTS INDUSTRY ASSOCIATION

EIA-364-27 - Mechanical Shock (Specified Pulse) Test Procedure for Electrical Connectors.

(Copies of these documents are available online at http://www.eciaonline.org or from the Electronic Component Industry Association, 1111Alderman Drive, Suite 400, Alpharetta, GA 30005-4175.)

TELECOMMUNICATIONS INDUSTRY ASSOCIATION

TIA455.14 - Fiber Optic Shock Tests (Specified Pulse).
TIA455.32 - Fiber Optic Circuit Discontinuities.

(Copies are available online at http://www.tiaonline.org/standards/catalog/index.cfm or from TIA, 2500 Wilson Boulevard, Suite 300, Arlington, VA 22201, USA, ATTN: Standards Department.)

2.3 Order of precedence. Unless otherwise noted herein or in the contract, in the event of a conflict between the text of this document and the references cited herein, the text of this document takes precedence. Nothing in this document, however, supersedes applicable laws and regulations unless a specific exemption has been obtained.

3. Definitions.

3.1 Optical signal discontinuity. A reduction in the optical transmittance below the minimum specified level for a time interval beyond the specified duration. A discontinuity is considered to occur for any further optical power level reduction, for any duration beyond the maximum allowed duration, or for a combination of these two criteria.

4. Setup. A generic representation of this optical measurement setup is shown in figure 2104-1 that shows one approach for the detection measurement. Test sample configuration shall conform to 4.1 under General Requirements in Part 2 of this Standard Practice. A minimum or four DUT's or four channels of a multiple channel DUT are to be monitored for optical signal discontinuity during the specified vibration/shock test. For the mechanical shock test, a minimum test sample length of 1 meter is to be mounted to the shock test fixture.

4.1 No switches. For optical signal discontinuity measurements, the optical source and detector are to be connected directly to each DUT/DUT channel to permit multiple monitoring of at least four DUT's or four channels of a DUT. No intermediary devices, such as switches, that do not allow a direct optical path from the optical source through the DUT to the detector are to be used.

4.2 Connection at source end. No disconnection of the source end of the test sample from the source is permitted during this test.

4.3 Test equipment. Requirements for test equipment shall be in compliance with Measurement Support Process 2202.

4.3.1 Instrumentation. Instrumentation used in the performance of the optical signal discontinuity test is to be verified for optical stability (see verification requirements in Measurement Support Process 2202). This verification is to be done and submitted for approval prior to start of testing. The test procedure must list the test equipment to be used. Verification must be submitted for optical stability of the test instrumentation.

4.3.2 Launch conditions. Requirements for launch conditions shall be in compliance with Measurement Support Process 2203.

4.3.2.1 Multimode configuration. The restricted launch condition shall be used. Although TIA/EIA-45-32 states that testing should be done using overfilled launch conditions, the individual fiber optic military specifications state that the restricted launch condition is to be used for the mechanical and environmental tests for components tested with multimode fiber.

4.3.2.2 Single mode configuration. A mandrel with diameter specified in Measurement Support Process 2203 shall be used.

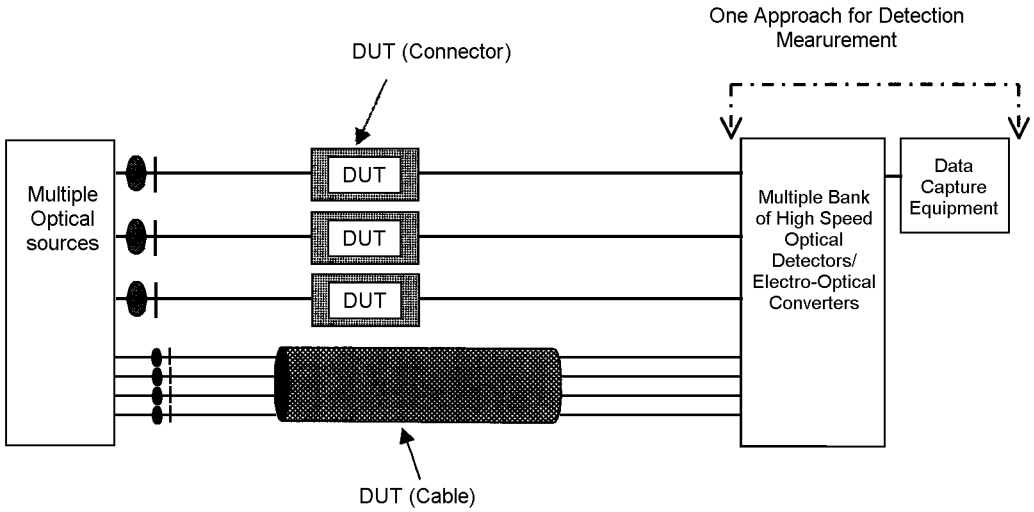

FIGURE 2104-1. Optical signal discontinuity.

4.3.3 Light source(s). Requirements for parameters specified in Measurement Support Process 2202 for the change in optical transmittance and insertion loss tests shall apply.

4.3.3.1 Optical source wavelength. Unless otherwise specified, optical signal discontinuity measurements shall be taken at 1,310 nm for single mode fiber and at 1,300 nm for multimode fiber. For aircraft designated components, the following optical source wavelength constraints shall be used. Single mode fiber optic components shall be tested using optical sources at the 1,310 nm wavelength. Multimode fiber optic components can be tested using an optical source at either the 850 nm or the 1,300 nm wavelength. Current preference is to use the 850 nm wavelength.

4.3.3.2 Optical source type. The optical signal discontinuity test for components with multimode fiber is to be done using an optical source with non-coherent light (an LED source shall be used). A coherent light source (LD) is preferred for components with single mode fiber.

4.3.4 Power meter. Requirements for parameters specified for the change in optical transmittance and insertion loss tests specified in Measurement Support Process 2202 shall apply with one additional requirement. The test equipment shall have a time resolution sufficient to resolve discontinuities of duration less than 50 **µ**s. Sufficient resolution shall be the ability to sample data at least one half the time resolution of the specified requirement for optical discontinuity (25 microseconds for a 50 microsecond optical discontinuity).

4.3.4.1 Data capture capability. Each channel being monitored for optical signal discontinuity (OSD) must have a discrete (separate) optical source, fast optical detector, and data capture capability. Data capture for the duration of each event during a test (such as each hammer strike, blow, drop, impact or wave-shape duration during a shock test) is preferred. Data capture set to specification limits, monitored continuously for specification limits, and recorded each event (amplitude and duration) that exceeded specification limits is acceptable also.

4.3.5 Use of a monitor fiber.

4.3.5.1 Monitoring fiber for optical signal discontinuity. The measurement method may include the use of a monitoring fiber. This method for optical signal discontinuity is an acceptable method; however, the use of a monitoring fiber may be waived for this measurement if the optical source stability is shown to be sufficiently stable and the monitoring fiber is not used to establish the trigger level.

4.3.5.2 Monitoring fiber for change in optical transmittance. For shock and vibration testing, of some components, the change in optical transmittance after the test is required in addition to the optical signal discontinuity during the test. An optical measurement system with multiple channel switches may be used for any channel in which only the change in optical transmittance is obtained. In short, the monitoring fiber is not needed strictly for an optical discontinuity measurement. The monitoring fiber can be used as part of the data needed to calculate the change in optical transmittance.

4.3.6 Verifications.

4.3.6.1 Conformance to requirements for optical light sources and detection system parameters listed above and as specified in Measurement Support Process 2202 shall be verified.

4.3.6.2 Conformance to requirement for equipment used shall be verified to have a resolution sufficient to resolve discontinuities of duration less than 50 microseconds or as otherwise specified. Verification of sufficient detector response, in accordance with 3.2.1.2 of TIA455.32 shall be provided.

4.3.6.3 Conformance to requirement of accelerometer used to monitor shock testing shall be verified. In accordance with A.2.3 of TIA455.14 (or EIA-364-27), the transducer (accelerometer) used to monitor the shock pulse must be calibrated over an expanded frequency range. The accuracy of the calibration method must be at least ± 5 percent over the frequency range of 2 to 5,000 Hz. The amplitude of the transducer being calibrated must be ± 5 percent over the frequency range of 4 to 5,000 Hz.

4.3.7 Test fixtures for rectangular backplane connector engagement distance. Test fixtures shall be used to set and maintain the module engagement distance for obtaining optical measurements of rectangular backplane connectors as specified Measurement 2204

5. Test procedure. The optical signal discontinuity measurements shall be performed in accordance with TIA455.32 using test equipment having a time resolution sufficient to resolve discontinuities of duration less than 50 µs. This test is not a “stand-alone” test, but it is one optical type measurement performed during a vibration test or a mechanical shock test. For tests of extended duration (i.e., some vibration tests), optical signal discontinuity measurements may be made at discrete times during the test as approved by the qualifying activity. One constraint is that this allowance to perform measurement at discrete times is not applicable if using data capture only when the specification limit is exceeded. The checklist in appendix A is provided to ensure compliance for inspection purposes. Maximum allowed values for selected fiber optic components are tabulated in appendix B.

MEASUREMENT 2104.4

5.1 Specific to type of equipment to detect and capture optical power levels (transients) outside of specified limits. Setup and test procedures shall be detailed and specific to the test equipment used. Various methods of detection/capture/recording may be used. Test performance shall include verification for compliance to 5.2 and 5.3.

5.2 Items to inspect/verify prior to test.

5.2.1 No splicing. Verify that no splicing was done as part of the setup for optical discontinuity measurement.

5.2.2 End faces clean. Verify that all fiber optic connection end faces (at equipment optical ports and connectors on mating cabling) are clean prior to mating or interface with the optical source or detector.

5.2.3 Seating. Verify that connectors are seated properly in their adapters and termini within the connector. A weak optical power level may be a function of improper seating, other misalignment or end face contamination.

5.2.4 Saturation. Verify that no saturation of the optical trace has occurred. Flat horizontal lines in the signal trace close to optical signal peaks are an indication of amplifier saturation.

5.2.5 Reduce optical power between source and optical-electric converter. Verify that the amplifier is not overdriven. Place a jumper between the source and detector (optical-electric converter). Obtain a trace measurement. Perform at least 5 wraps of the jumper around a 0.64 mm (.025 inch) mandrel. If the optical power level does not change, then the amplifier is overdriven.

5.2.6 Optical source power mode. Verify that the optical source is transmitting in the external power (un-modulated) or continuous power mode of operation if so equipped.

5.2.7 Marking position of tightening/fastening mechanisms. Verify that a mark is placed where DUT is tightened/fastened. This mark shall be used to determine if any optical signal discontinuities are due to movement by the fastening mechanism.

5.3 Items to inspect/verify during the test.

5.3.1 Look at data after each axis (vibration) or impact (shock). Verify that no optical signal discontinuities occurred prior to proceeding to the next portion of the test.

5.3.2 Post axis/impact results in optical power gain above insertion loss value. Verify that the power level did not increase beyond that of an uncut fiber (one in which a DUT was not inserted). If this occurred, then the data shall be considered invalid. Redo axis/impact. Corrective measures shall include inspect for improper seated connectors and large particles/dirt on end face.

5.4 Calculations.

5.4.1 Equation to set the threshold for the trigger. To obtain the threshold from an initial detector voltage from the DUT, the equation is:

$$-0.5 = -10 \text{ Log } (V_{trigger}/V_{DUTinitial}).$$

From this equation the trigger should be set at 0.9 (or more precisely 0.8912) of $V_{DUTinitial}$. The above equation assumes that there is zero power at zero volts (V_0).

If not, then the following equation must be used:

$$-0.5 = -10 \text{ Log } [(V_{trigger} - V_0)/(V_{DUTinitial} - V_0)].$$

In the electrical usage, $P_{electrical} = V^2/R$.
In the optical usage the $P_{optical}$ is linear with the voltage.
In terms of decibels, $P_{optical} = -10 \text{ Log } (V_{measured}/V_{reference})$, whereas $P_{electrical} = -20\text{Log } (V_{measured}/V_{reference})$.

This equation is for setting the threshold where the amplitude for the optical discontinuity is 0.5 dB. This equation must be revised for a threshold requirement with a different amplitude. Specifically, the equation must be changed by replacing the “-0.5” with the applicable threshold requirement.

5.4.2 Chart showing duration of optical signal discontinuity. Objective evidence shall be provided that test requirements were achieved whether it is recorded on a plot/chart, stored data on disk or by other means approved by the qualification activity. Any stored data must be retained and made available at Government request. A plot of the variation in optical signal level during each mechanical shock pulse is desired to verify compliance with the optical signal discontinuity requirement in the applicable test specification. When specified by the Qualifying Activity, plots shall be provided and conform to 5.4.2.1 through 5.4.2.3.

5.4.2.1 Chart duration. The chart provided shall display sufficient duration to see the full extent of the optical discontinuity.

5.4.2.2 Chart threshold. The chart threshold power shall be displayed as “0” and not “1” or other base value.

5.4.2.3 Chart resolution. Resolution shall be sufficient to verify pass/fail criteria.

5.5 Data sheet. In addition to the items for the standard data sheet listed in Measurement Support Process 2202, the data sheet shall include 5.5.1 through 5.5.4.

5.5.1 Record/checklist to verify adjustments required by detection equipment were performed properly.

5.5.2 Calibration data of detection system if not done on a routine calibration cycle.

5.5.3 Recorded voltages and calculated optical transmittance (discontinuity) values if not automated.

5.5.4 Sign convention for optical values recorded. The sign convention for the optical signal discontinuity shall be stated on the data sheet. For instance, an increase in the optical power level, i.e., optical transmittance, is recorded as + dB. Similarly in this case, a decrease in optical transmittance (decreasing power) is recorded as – dB.

6. Notes.

6.1 Intended use.

6.1.1 Loss mechanisms. For single mode, a different loss mechanism dominates each window. Connection losses are greater at the 1,310 nm wavelength. Microbend sensitivity losses dominate the 1,550 nm wavelength. For multimode, difference in loss at the 850 nm and 1,300 nm wavelength are cable length dependent. This loss is greater at the 850 nm wavelength.

MEASUREMENT 2104.4

APPENDIX A

MINIMUM ESSENTIAL CHECKLIST FOR OPTICAL SIGNAL DISCONTINUITY MEASUREMENTS

A.1 Purpose. This appendix addresses a checklist of the minimum essentials for the optical signal discontinuity measurement.

A.2 Usage. Table 2104 A-I is the checklist of minimum essentials for Government auditors, or their representatives, use during inspections. This checklist should be expanded at the auditor's discretion.

TABLE 2104 A-I. Minimum essential checklist for optical signal discontinuity measurements.

Item	Category	Description	Requirement	Compliance
1	Test sample configuration	Cable assembly length: Connectors and splices	10 meters minimum (13 m if to do 3 cut-backs)	
		Fiber optic cable	500 meters minimum	
2	Room ambient environ-mental condition	Standard ambient (if test equipment built to operate in this range, if not-then controlled ambient)	23 ± 5°C/73 ± 9°F and 20 to 70 percent RH	
		Controlled ambient	23 ± 2°C/73 ± 4°F and 45 to 55 percent RH	
3	Test condition	Test setup cable routing	Bend diameters ≥ min long term bend diameter	
			Sharp twists and bends avoided	
			Avoid protrusions/other obstacles	
4	Environmental chamber charts	Temperature and humidity profiles recorded	Chart, stored data on disk, other approved means	
			Includes chamber model and serial, date of test	
	Test equipment	Pertains to items 5 to 7		
5	Multimode optical source	Source type: LED	Compliance with Measurement Support Process 2203	
		Performance parameters	Compliance with Measurement Support Process 2202	
6	Single mode optical source	Source type: LD	Compliance with Measurement Support Process 2203	
		Performance parameters	Compliance with Measurement Support Process 2202	
7	Power meter	Performance parameters	Compliance with Measurement Support Process 2202	
		Added requirement: Detector size per trigonometric analysis (see detector verification test, Measurement Support Process 2202)	sufficient active area and placed sufficiently close to the end of the fiber to detect all the radiation emitted from it (captures light – both spatial and angular)	
		Added requirement: Detector response: resolution to resolve signal	≥ 50 microseconds	
8	Accelerometer	Accuracy	± 5 percent from 5 to 5,000 Hz	
		Amplitude calibration	± 5 percent from 4 to 5,000 Hz	

MEASUREMENT 2104.4

APPENDIX A

TABLE 2104 A-I. Minimum essential checklist for optical signal discontinuity measurements - Continued.

Item	Category	Description	Requirement	Compliance
	Launch conditions	Pertains to items 9 to 11		
9	Multimode	Overfilled launch	Not Applicable (N/A) for this test (restricted launch only)	
10	Multimode	Restricted launch	Compliance with Measurement Support Process 2203	
11	Single mode	Reduce higher order modes	Compliance with Measurement Support Process 2203	
12	Test setup	Items to inspect for compliance	No switching system (source-DUT-detector)	
			No splicing of cable assembly	
			Restricted launch at source end of each DUT/each channel	
		Items to minimize variation in test	Secure/tie down cables (no move at instr. ports)	
			In line approach to and from connection for mates	
			Attachment to fixture adequate (no wobble)	
13	Test procedure	Approved test procedure	Compliance with Measurement Support Process 2201	
		Maintain setup during test (source end)	No detachment of DUT cable from source	
		Use correct detector (Power meter = pwr mtr)	Response adequate, resolve ≤ 50 microseconds	
		Optical connections of DUT	No splicing near DUT	
		Acceptable connections	Cleaned and properly seated (power level okay)	
		Data capture signal level set properly	Not saturate (flat close to peak value)	
			amp not overdriven (level changes if attenuated)	
		Verify if movement at connection	Mark joint where DUT is tightened	
			Observe if movement during test	
		Optical source transmission	Continuous power mode	
		Observe if no discontinuities during test, (if data capture equipment permits)	Shock: Verify after each impact	
			Vibration: Verify after each axis	
		Observe data for optical power gains above	If occurs, data is invalid	
		Value of insertion loss (that of uncut fiber)	Clean, reseat, then redo axis/impact	
14	Calculation	Equation to trigger threshold in dB (see 5.4.1)	Verify proper method if operator performed	
		Method to store data	Plot/chart, stored data on disk or other Government approved	
15	Data sheet	Approved data sheet	Compliance with Measurement Support Process 2201	
		Adjustments to detection system	Record/checklist that done properly	
		Detection system calibration	Verification if not done on routine cycle	

TABLE 2104 A-I. Minimum essential checklist for optical signal discontinuity measurements - Continued.

Item	Category	Description	Requirement	Compliance
16	Pass/fail criteria	Proper criteria specified	Conforms with military specification parameters and values	
		Proper criteria implemented	Test operators knows if fail and to verify result	

A.3 Notes.

A.3.1 Intended use.

A.3.1.1 Audit team. This checklist is intended to assist Government auditors or their representatives during inspections of the optical measurement system. This checklist may be augmented at the auditor's discretion; however, it is not to be reduced.

A.3.1.2 Test laboratories. When test laboratories prepare to perform optical measurements or audits, this checklist should be used to supplement Measurement 2104, not replace it.

MEASUREMENT 2104.4

APPENDIX B

MAXIMUM ALLOWED VALUES FOR OPTICAL SIGNAL DISCONTINUITY MEASUREMENTS

B.1 Purpose. This appendix provides in tabular format the maximum allowed values for optical signal discontinuity that are specified in various military fiber optic component specifications.

B.2. APPLICABLE DOCUMENTS

B.2.1 General. The documents listed in this section are specified in sections 3, 4, and 5 of this standard practice. This section does not include documents cited in other sections of this standard practice or recommended for additional information or as examples. While every effort has been made to ensure the completeness of this list, document users are cautioned that they must meet all specified requirements of documents cited in sections 3, 4, and 5 of this standard practice, whether or not they are listed.

B.2.2 Government documents.

B.2.2.1 Specifications, standards, and handbooks. The following specifications, standards, and handbooks form a part of this document to the extent specified herein. Unless otherwise specified, the issues of these documents are those cited in the solicitation or contract.

DEPARTMENT OF DEFENSE SPECIFICATIONS

MIL-PRF-24623	-	Splice, Fiber Optic Cable, General Specification for (Metric).
MIL-PRF-29504	-	Termini, Fiber Optic Connectors, Removable, General Specification for.
MIL-PRF-28876	-	Connectors, Fiber Optic Circular, Plug and Receptacle Style, Multiple Removable Termini, General Specification for.
MIL-PRF-64266	-	Connectors, Fiber Optic, Circular, Plug and Receptacle Style, Multiple Removable Genderless Termini, Environment Resisting General Specification For.
MIL-DTL-83522	-	Connectors, Fiber Optic, Single Termini, General Specification for.

(Copies of these documents are available online at https://quicksearch.dla.mil.)

B.2.3 Order of precedence. Unless otherwise noted herein or in the contract, in the event of a conflict between the text of this document and the references cited herein, the text of this document takes precedence. Nothing in this document, however, supersedes applicable laws and regulations unless a specific exemption has been obtained.

B.3 Pass/fail criteria (generic). The optical signal discontinuity will not exceed the reduction in the optical transmittance below the minimum specified level or for any duration beyond the maximum allowed duration.

B.4 Intended use. Table 2104 B-I provides pass/fail criteria to assist Government auditors, or their representatives, during documentation reviews (such as test procedures and test reports) and inspections. Revisions to the military specifications supersede any values found in table 2104 B-I.

MEASUREMENT 2104.4

APPENDIX B

TABLE 2104 B-I. Maximum allowed optical signal discontinuity.

Military specification	Requirement
MIL-PRF-24623	No discontinuity shall occur. A discontinuity is considered to be a reduction in optical transmittance of 0.3 dB or more for a duration of 50 microseconds or longer.
MIL-PRF-28876 MIL-PRF-29504 MIL-PRF-64266	No discontinuity shall occur. A discontinuity is considered to be a reduction in optical transmittance of 0.5 dB or more for a duration of 50 microseconds or longer for termini with multimode fiber. A discontinuity is considered to be a reduction in optical transmittance of 0.5 dB or more for a duration of 100 milliseconds or longer for termini with single mode fiber.
MIL-DTL-83522	No discontinuity shall occur. 1. Multimode, top and back impacts. A discontinuity is considered to be a reduction in optical transmittance of 0.5 dB or more for a duration of 50 microseconds or longer for connectors with multimode fiber tested for the top and back impacts. 2. Multimode, side impacts. A discontinuity is considered to be a reduction in optical transmittance of 0.5 dB or more for a duration of 500 microseconds or longer with multimode fiber tested for the side impacts. 3. Single mode; top, back and side impacts. A discontinuity is considered to be a reduction In optical transmittance of 0.5 dB or more for a duration of 1 seconds or longer for connectors with single mode fiber.
MIL-PRF-85045	No discontinuity shall occur. A discontinuity is considered to be a reduction in optical transmittance of 0.5 dB or more for a duration of 50 microseconds or longer for fiber optic cable with multimode fiber. A discontinuity is considered to be a reduction in optical transmittance of 0.3 dB or more for a duration of 50 microseconds or longer for fiber optic cable with single mode fiber.

MEASUREMENT 2105.3

OPTICAL RETURN LOSS

1. Purpose. This measurement is performed when there is the requirement to determine the amount of loss which occurs at a fiber optic connection due to back reflection at one connector interface (reflectance) or at aggregate reflective loss for one or more cable assemblies (return loss). Measurement 2105 is intended to standardize on the performance of this measurement, as specified in a commercial standard (TIA455.107), by imposing further refinements or boundaries (constraints). To ensure that the risk to the Government of accepting bad optical measurement data is small, to minimize test variations and to permit more accurate comparison of test results from multiple sources, a prescription approach is specified for the optical instrumentation used to obtain this measurement.

1.1 Measurement 2105 with revision designator. See 1.3 and 1.4 in Part 2 of this Standard Practice (material in beginning of Part 2) to identify the Measurement number from the revision designator and method to reference this Measurement in other documents.

2. APPLICABLE DOCUMENTS

2.1 General. The documents listed in this section are specified in sections 3, 4, and 5 of this standard practice. This section does not include documents cited in other sections of this standard practice or recommended for additional information or as examples. While every effort has been made to ensure the completeness of this list, document users are cautioned that they must meet all specified requirements of documents cited in sections 3, 4, and 5 of this standard practice, whether or not they are listed.

2.2 Non-Government publications. The following documents form a part of this document to the extent specified herein. Unless otherwise specified, the issues of these documents are those cited in the solicitation or contract.

TELECOMMUNICATIONS INDUSTRY ASSOCIATION

TIA-455-8	-	Measurement of Splice or Connector Loss and Reflectance Using an OTDR.
TIA-455.107	-	Determination of Component Reflectance or Link/System Return Loss Using a Loss Test Set.
TIA-455-180A	-	Measurement of the Optical Transfer Coefficients of a Passive Branching Device (Coupler).

(Copies are available online at http://www.tiaonline.org/standards/catalog/index.cfm or from TIA, 2500 Wilson Boulevard, Suite 300, Arlington, VA 22201, USA, ATTN: Standards Department.)

2.3 Order of precedence. Unless otherwise noted herein or in the contract, in the event of a conflict between the text of this document and the references cited herein, the text of this document takes precedence. Nothing in this document, however, supersedes applicable laws and regulations unless a specific exemption has been obtained.

3. Definitions.

3.1. Optical return loss. The ratio of the optical power in a fiber optic system or link. This is the ratio of the reflected power, P_r, to the incident power, P_i, in the unit of measure of dB. The return loss is measured as a positive value. Although the ratio of reflected power to incident power is a fraction less than one, the minus sign in front of the equation for optical return loss makes the value calculated a positive quantity. The optical return loss is measured when two or more optical interfaces are in the fiber optic system or link.

3.2. Reflectance. The ratio of the optical power at a single fiber optic interface or at one reflection point. This is the ratio of the reflected power, P_r, to the incident power, P_i, in the unit of measure of dB. The reflectance is measured as a negative value since the log of the ratio of reflected power to incident power is a fraction less than one (a negative value).

4. Setup. A generic representation of this optical measurement setup shown in figure 2105-1 is for the approach using an Optical Return Loss Meter (ORLM). The internal setup for the ORLM using a coupler is shown in figure 2105-2. Test sample configuration shall conform to 4.1 under General Requirements in Part 2 of this Standard Practice.

MEASUREMENT 2105.3

4.1 Connection at source end. No disconnection of the source end of the test sample from the source is permitted during this test. This disconnection is not allowed once the source end of the DUT is attached to a measurement system for optical monitoring during a series of mechanical or environmental tests.

4.2 Systems with switches. The return loss test is to be performed from the detector end only, on test samples, when measurements require that the optical path be disconnected for attachment to a return loss meter. No source end test sample removal from the test instrumentation is permitted. Mandrel wrapping during the measurement is to occur without disconnecting any optics at the test sample source end. Disconnecting the optics at the detector end is a source of error for succeeding change in optical transmittance measurements when the detector end is not connected directly to an optical power meter. Errors may be caused, by changing the optical conditions at the detector end when a switching system is used or when connecting directly to a detector with optics (such as a Grin lens) between the connector and photocell.

4.3 Test equipment (continuous wave measurements). The requirements listed in 4.3.1 through 4.3.3 for the optical source and detection system are applicable when an Optical Return Loss Meter (ORLM) is used.

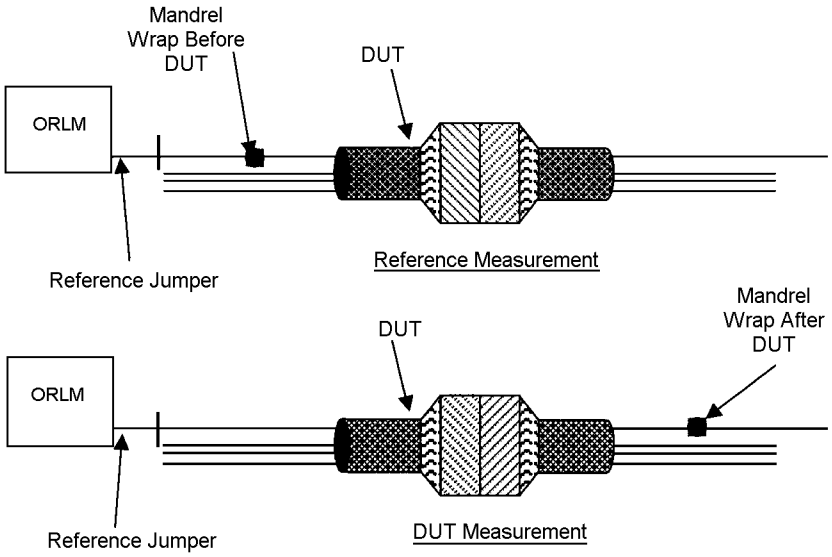

FIGURE 2105-1. Optical return loss: Test using ORLM (Optical Return Loss Meter).

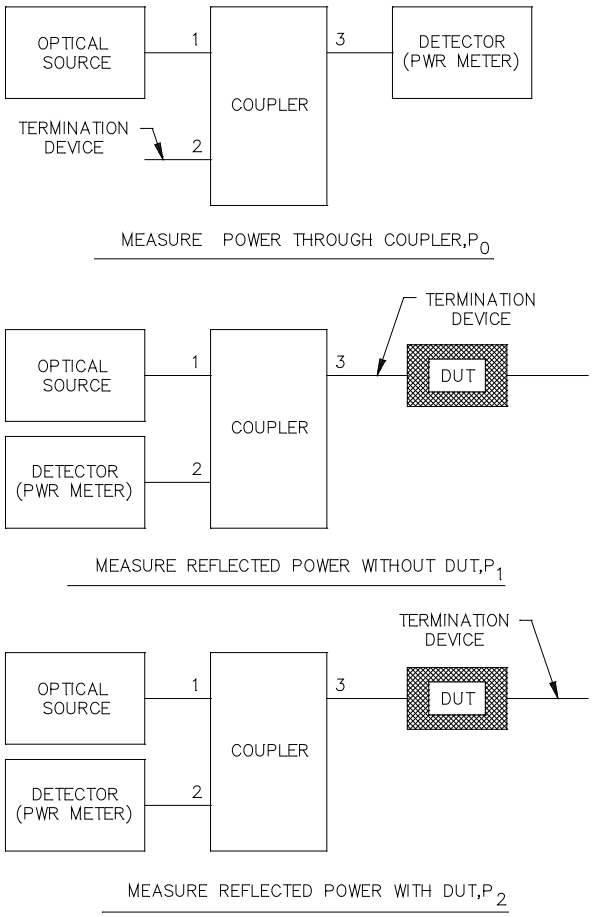

FIGURE 2105-2. Optical return loss: Test using coupler.

4.3.1 Optical source.

4.3.1.1 Optical source wavelength. Measurements shall be taken at 1310 nm. For aircraft designated components, the components shall be tested using optical sources at both the 1,310 nm and the 1,550 nm wavelengths.

4.3.1.2 Optical source type. Measurements shall be taken using an optical source with a coherent light source (LD).

4.3.2 Launch conditions. Launch conditions are not controlled.

4.3.3 Detection system.

4.3.3.1 Measured reflectance range: 10 to 55 dB minimum for measurement of domed end faces with a PC polish. 10 to 65 dB minimum for measurement domed end faces with an APC polish.

4.3.3.2 Resolution: 0.1 dB minimum.

4.3.3.3 Accuracy: ± 5 dB minimum at a return loss of 55 dB for measurement of domed end faces with a PC polish. ± 5 dB minimum at a return loss of 60 dB for measurement of domed end faces with an APC polish.

4.3.3.4 Detector size: Sufficient active area and placed sufficiently close to the end of the fiber to detect all the radiation emitted from it.

4.3.3.5 Detector stability: ≤ 0.1 dB/hr.

4.3.3.6 Measurement repeatability: Less than 3 percent variation.

4.3.3.7 Ambient light susceptibility (recommended). Effects of ambient light into the detector need to be controlled.

4.3.4 Coupler. When allowed and if approved by the qualifying activity, measurement using a coupler shall conform as specified in measurement 2105 appendix D.

4.3.5 Time of flight measurements (other types of test equipment/measurement approaches). Determination of the initial return loss must be done using test equipment and the method that complies with TIA455.107. Other technologies (such as OTDR based measuring technique, such as time of flight measurements) will be permitted, if approved by the qualifying activity, with the following constraint. The initial return loss must first be performed using test equipment and the method that complies with TIA455.107. Next, the initial return loss must be redone using the other technique. If the measurements are within 1 dB, then the other technique can be used for subsequent return loss measurements.

4.3.6 Termination device. Between 5 to 10 turns or wraps around a specified mandrel diameter (usually 6 to 10 mm (.24 to .39 inch)) is one acceptable method to provide a non-reflective termination. Mandrel diameter and number of wraps must be sufficient to provide a minimum attenuation level required by the measurement (usually 40 dB). Index matching material/gel may be used as a termination device, but is less preferred due to potential cleaning/contamination problems.

4.3.7 Verifications.

4.3.7.1 Verify conformance to requirements for optical light sources and detection system parameters listed in 4.3.1 through 4.3.6.

4.3.7.2 Verify conformance to TIA455.107 test method. The internal measurement system for an Optical Return Loss Meter (ORLM) shall be equivalent to using an optical source, three port (1X2) coupler (splitter) and power meter.

4.3.7.3 Verify conformance when alternative measurement approaches (such time of flight) are used. When an OTDR is used, verify measurement compatibility to an ORLM as stated in 4.3.5.

4.3.7.4 Verify consistency of measurement as specified in appendix C.

4.3.8 Test fixtures for rectangular backplane connector engagement distance. Test fixtures shall be used to set and maintain the module engagement distance for obtaining optical measurements of rectangular backplane connectors as specified Measurement 2204.

5. Test procedure.

5.1 Test methods. The return loss shall be measured in accordance with TIA455.107 or by an equivalent method (for a continuous wave measurement). The checklist in appendix A is provided to ensure compliance for inspection purposes. Maximum allowed values for selected fiber optic components are tabulated in appendix B.

5.1.1 Sequence in testing. The return loss measurement is usually performed prior to the start of a mechanical or environmental test sequence (initial return loss test under group I optical tests). Once this sequence is concluded, a second return loss measurement (a subsequent return loss or return loss verification test) is performed. Other specifications require return loss measurements after selected tests in the test sequence as opposed to only one measurement after the sequence.

5.1.2 Applicable fiber type. The return loss measurement is performed on single mode test samples.

5.2 Test synopsis.

5.2.1 Test using ORLM.

5.2.1.1 Perform the reference measurement. Mandrel wrap before the DUT and reference the ORLM. Verify reference measurement is inacceptable range. Undo mandrel wrap.

5.2.1.2 Perform DUT measurement. Mandrel wrap after the DUT with sufficient turns that the measurement is stable. Record the measurement as the value for return loss.

5.2.2 Test using equivalent method (optical source, coupler, power meter).

5.2.2.1 Measure optical power transmitted through the coupler, measurement P_o. Attach optical source at port 1 of the coupler and the detector to port 3. Place a termination device at port 2.

5.2.2.2 Measure optical power reflected back to the input port without a DUT attached at port 3, measurement P_1. Measure the reflected power at port 2 by placing the power meter at this port. The optical source remains at port 1 and a termination device is placed at port 3.

5.2.2.3 Measure optical power reflected back to the input port with a DUT attached at port 3, measurement P_2. Measure the reflected power at port 2 with the power meter at this port. The optical source remains at port 1. One end of the DUT is placed at port 3. A termination device is placed at the other end of the DUT.

5.3 Methods for continuous wave measurements. Test performed using an ORLM is the preferred test method.

5.3.1 Initial return loss. Test shall be performed using a continuous wave measurement instrument (ORLM, or as allowed by 4.3.4).

5.3.2 Subsequent measurements. A time of flight measurement approach (OTDR) may be used for subsequent return loss measurements provided that the requirements in 4.3.5 are met. Time of flight measurement shall be performed using an equivalent method to TIA-455-8.

5.4 Reference reflectors. Reference reflectors are discouraged for use in this test.

5.5 ORLM measurement. When an ORLM is used to make the measurement, no splicing shall be done from the ORLM to the mandrel wrap after the DUT.

MEASUREMENT 2105.3

5.6 Calculations. This calculation is done when using the equivalent method. Ports 1 and 2 are on one side of the coupler (input ports) and port 3 is on the other side (output port).

$L_R = -10 \text{ Log } [(P_2 - P_1)/P_o] - L_C$

Where:

L_R = Optical Return Loss (ORL).
L_C = Coupler Insertion Loss found using method in TIA-455-180A.
P_2 = Optical power reflected back to the input port when a DUT is attached at port 3 (reflected power at port 2 from optical source at port 1 and the DUT followed by a termination device at port 3).
P_1 = Optical power reflected back to the input port without a DUT attached at port 3 (reflected power at port 2 from optical source at port 1 and a termination device at port 3).
P_0 = Optical power transmitted through the coupler (from optical source at port 1 to detector at port 3 with a termination device at port 2).

5.7 Data sheet. In addition to the items for the standard data sheet listed in Measurement Support Process 2201, the data sheet is to list the items in 5.7.1 and 5.7.2.

5.7.1 Termination device (for mandrels, include mandrel diameter and number of wraps used).

5.7.2 Sign convention for optical values recorded. State the sign convention for the measurement performed for each parameter on the data sheet. For instance, Optical Return Loss is recorded as + dB. Similarly reflectance measurement is recorded as - dB.

6. Notes.

6.1 Intended use. This test is performed to ensure that the amount of reflected light is not sufficient to disturb optical source and network operations. Some technologies are sensitive to reflected light. If bidirectional signals are run, then reflected light can get back into the signal path propagating in the opposite direction. Multiple reflections can get back into the transmitted signal path and cause interference.

MEASUREMENT 2105.3

APPENDIX A

MINIMUM ESSENTIAL CHECKLIST FOR OPTICAL RETURN LOSS MEASUREMENTS

A.1 Purpose. This appendix addresses a checklist of the minimum essentials for the optical return loss measurement.

A.2 Usage. Table 2105 A-I is the checklist of minimum essentials for Government auditors, or their representatives, use during inspections. This checklist should be expanded at the auditor's discretion.

TABLE 2105 A-I. Minimum essential checklist for optical return loss measurements.

Item	Category	Description	Requirement	Compliance
1	Test sample configuration	Cable assembly length: Connectors and splices	10 m minimum (13 m if insertion loss cut-back)	
2	Room ambient environ-mental condition	Standard ambient (if test equipment built to operate in this range, if not-then controlled ambient)	23 ± 5°C/73 ± 9°F and 20 to 70 percent RH	
		Controlled ambient	23 ± 2°C/73 ± 4°F and 45 to 55 percent RH	
3	Test condition	Test setup cable routing	Bend diameters ≥ min long term bend diameter	
			Sharp twists and bends avoided	
			Avoid protrusions/other obstacles	
4	Environmental chamber charts	Temperature and humidity profiles recorded	Chart, stored data on disk, other approved means	
			Includes chamber model and serial, date of test	
	Test equipment	Pertains to items 5 to 10		
5	Single mode optical source	Source type: LD	Compliance with Measurement Support Process 2203	
		Performance parameters	Compliance with Measurement Support Process 2202	
6	Detector	Measured reflectance range, PC polish connectors, mechanical splice	10 to 55 dB minimum	
		Measured reflectance range, APC polish connectors, fusion splice" and with a requirement	10 to 65 dB minimum	
	(ORLM or separate detector)	Resolution	0.1 dB minimum	
		Accuracy	± 0.5 dB minimum at return loss of - 55 dB	
		Detector size per trigonometric analysis (see detector verification test, Measurement Support Process 2202)	Sufficient active area and placed sufficiently close to the end of the fiber to detect all the radiation emitted from it (captures light – both spatial and angular)	
		Detector stability	≤ 0.1 dB/hr.	
		Measurement repeatability	Less than 3 percent variation	
		Ambient light susceptibility (recommended)	Detector unit sealed to extent that not exposed to ambient light (ports covered completely)	

MEASUREMENT 2105.3

APPENDIX A

TABLE 2105 A-I. Minimum essential checklist for optical return loss measurements - Continued.

Item	Category	Description	Requirement	Compliance
7	Coupler	If equivalent method where stand-alone coupler (not use ORLM)	Do coupler insertion loss in accordance with TIA-455-180A Verify separate procedure to do insert loss exits	
8	OTDR or time of flight type measurement	Approach for acceptance for a non-continuous wave measurement method for optical return Loss (ORL) - using time of flight measurement	Do ORL, use TIA455.107 method -ORLM	
			Do ORL to time of flight method in accordance with TIA-455-8	
			If both within 1 dB of each other, okay to use time of flight for subsequent ORL measurements	
9	Termination device	Acceptable methods to do non-reflective terminations	Mandrel (6-10 mm (.24-.39 inch) dia.), 5 to 10 turns/wraps	
			Index matching gel (less preferred – messy!)	
			Either way, must do min attenuation level 40 dB	
	Launch conditions	Pertains to items 11 to 13		
10	Multimode	Overfilled launch (with initial OIL only)	Compliance with Measurement Support Process 2203	
11	Multimode	Restricted launch	Compliance with Measurement Support Process 2203	
12	Single mode	Reduce higher order modes	Compliance with Measurement Support Process 2203	
13	Test setup	Items to inspect for compliance	No switching system (ORLM or source-cpl-detector)	
			No splicing of cable assembly	
			Hi order mode fill at source end of each DUT/each channel	
		Items to minimize variation in test	Secure/tie down cables (no move at instr. ports)	
			In line approach to and from connection for mates	
			Use of substantial fixtures (no wobbling)	
14	Test procedure (test using ORLM)	Approved test procedure	Compliance with Section IX	
		Maintain setup during test (source end)	No detachment of DUT cable from source	
		Perform reference measurement	Mandrel wrap before DUT, reference ORLM	
		Perform DUT measurement	Mandrel wrap after DUT with turns so stable	
			Record measurement as the return loss	

TABLE 2105 A-I. Minimum essential checklist for optical return loss measurements - Continued.

Item	Category	Description	Requirement	Compliance
15	Test procedure (test using equivalent method, i.e., source-coupler-power meter)	Approved test procedure	Compliance with Measurement Support Process 2201	
		Maintain setup during test (source end)	No detachment of DUT cable from source	
		Measure optical power thru coupler, P_0	Port1 = source, port2 = terminator, port3 = detector	
		Measure reflected power to port2 without DUT	Port1 = source, port2 = detector, port3 = terminator	
		Measure reflected power to port2 with DUT	Port1 = source, port2 = detector, port3 = DUT, then terminator	
		Calculate return loss	Verify correct calculation, see 5.6	
16	Calculation	Equation to give value in dB	Verify proper method if operator performed	
		Sign convention	Recorded as positive value	
17	Data sheet	Approved data sheet	Compliance with Measurement Support Process 2201	
		Type of termination device used	If mandrel, diameter and number of wraps	
		Sign convention	Return loss, record as + dB	
18	Pass/fail criteria	Proper criteria specified	Conforms with MIL-SPEC parameters and values	
		Proper criteria implemented	Test operators knows if fail and to verify result	

A.3 Notes.

A.3.1 Intended use.

A.3.1.1 Audit team. This checklist is intended to assist Government auditors or their representatives during inspections of the optical measurement system. This checklist may be augmented at the auditor's discretion; however, it is not to be reduced.

A.3.1.2 Test laboratories. When test laboratories prepare to perform optical measurements or audits, this checklist should be used to supplement Measurement 2105, not replace it.

MEASUREMENT 2105.3

APPENDIX B

MAXIMUM ALLOWED VALUES FOR OPTICAL RETURN LOSS MEASUREMENTS

B.1 Purpose. This appendix provides in tabular format the maximum allowed values for optical return loss that are specified in various military fiber optic component specifications.

B.2. APPLICABLE DOCUMENTS

B.2.1 General. The documents listed in this section are specified in sections 3, 4, and 5 of this standard practice. This section does not include documents cited in other sections of this standard practice or recommended for additional information or as examples. While every effort has been made to ensure the completeness of this list, document users are cautioned that they must meet all specified requirements of documents cited in sections 3, 4, and 5 of this standard practice, whether or not they are listed.

B.2.2 Government documents.

B.2.2.1 Specifications, standards, and handbooks. The following specifications, standards, and handbooks form a part of this document to the extent specified herein. Unless otherwise specified, the issues of these documents are those cited in the solicitation or contract.

DEPARTMENT OF DEFENSE SPECIFICATIONS

MIL-PRF-24623	-	Splice, Fiber Optic Cable, General Specification for (Metric).
MIL-PRF-29504	-	Termini, Fiber Optic Connectors, Removable, General Specification for.
MIL-PRF-28876	-	Connectors, Fiber Optic Circular, Plug and Receptacle Style, Multiple Removable Termini, General Specification for.
MIL-PRF-64266	-	Connectors, Fiber Optic, Circular, Plug and Receptacle Style, Multiple Removable Genderless Termini, Environment Resisting General Specification For.
MIL-DTL-83522	-	Connectors, Fiber Optic, Single Termini, General Specification for.

(Copies of these documents are available online at https://quicksearch.dla.mil.)

B.2.3 Order of precedence. Unless otherwise noted herein or in the contract, in the event of a conflict between the text of this document and the references cited herein, the text of this document takes precedence. Nothing in this document, however, supersedes applicable laws and regulations unless a specific exemption has been obtained.

B.3 Pass/fail criteria (generic). The optical return loss will be not less than the specified power level.

B.4 Intended use. Table 2105 B-I provides pass/fail criteria to assist Government auditors, or their representatives, during documentation reviews (such as test procedures and test reports) and inspections. Revisions to the military specifications supersede any values found in table 2105 B-I.

MEASUREMENT 2105.3

APPENDIX B

TABLE 2105 B-I. Maximum allowed optical return loss.

Military specification	Requirement
MIL-PRF-24623	The return loss shall be not less than 30 dB.
MIL-PRF-24623/6	The return loss of a single mode fusion splice shall be not less than 57 dB.
MIL-PRF-28876 MIL-PRF-29504 MIL-PRF-64266	The return loss of a multimode or single mode optical terminus shall be not less than 30 dB. The return loss of an enhanced polish single mode optical terminus shall be not less than 40 dB. The return loss of an APC polish single mode terminus shall be not less than 60 dB.
MIL-DTL-83522	The return loss of a standard polish multimode or single mode optical terminus shall be not less than 30 dB. The return loss of an enhanced polish single mode optical terminus shall be not less than 40 dB.

MEASUREMENT 2105.3

APPENDIX C

Optical Return Loss Meter (ORLM) Measurement Consistency

C.1. Purpose. This appendix addresses the method to verify the consistency of an optical return loss meter (ORLM) when the ORLM is used during the qualification process, other laboratory type applications, or installation acceptance.

C.2. Method. A one point measurement is used as the means to verify consistency for return loss.

C.2.1 Single mode. Optical return loss through the 1 km spool of Corning SMF-28 or equivalent single mode optical fiber will not exceed 37 +/- 1 dB at a wavelength of 1310 nm or will not exceed 42 +/- 1 dB at a wavelength of 1550 nm. The tolerance on the 37 dB and 42 dB values is based on the end of the optical fiber end being terminated to achieve a low reflection that yields a 50 dB or greater (i.e., less reflection) return loss at the fiber end.

C.2.2 Multimode 50/125 micron fiber size. Optical return loss through the 1 km spool of Corning 50/125 micron Infinicor or equivalent optical fiber will not exceed 30 +/- 1 dB at a wavelength of 850 nm or will not exceed 36 +/- 1 dB at a wavelength of 1300 nm. The tolerance on the 30 dB and 36 dB values is based on the end of the optical fiber end being terminated to achieve a low reflection that yields a 50 dB or greater (i.e., less reflection) return loss at the fiber end.

C.2.3 Multimode 62.5/125 micron fiber size. Optical return loss through the 1 km spool of Corning 62.5/125 micron Infinicor or equivalent optical fiber will not exceed 30 +/- 1 dB at a wavelength of 850 nm or will not exceed 36 +/- 1 dB at a wavelength of 1300 nm. The tolerance on the 30 dB and 36 dB value is based on the end of the optical fiber end being terminated to achieve a low reflection that yields a 50 dB or greater (i.e., less reflection) return loss at the fiber end.

MEASUREMENT 2105.3

APPENDIX D

OPTICAL RETURN LOSS METER EQUIVALENT INSTRUMENTATION

D.1 Purpose. This appendix addresses the method for a continuous wave measurement using a coupler instead of a commercially available Optical Return Loss Meter (ORLM).

D.2. APPLICABLE DOCUMENTS

D.2.1 General. The documents listed in this section are specified in sections 3, 4, and 5 of this standard practice. This section does not include documents cited in other sections of this standard practice or recommended for additional information or as examples. While every effort has been made to ensure the completeness of this list, document users are cautioned that they must meet all specified requirements of documents cited in sections 3, 4, and 5 of this standard practice, whether or not they are listed.

D.2.2 Non-Government publications. The following documents form a part of this document to the extent specified herein. Unless otherwise specified, the issues of these documents are those cited in the solicitation or contract.

TELECOMMUNICATIONS INDUSTRY ASSOCIATION

TIA-455.107 - Determination of Component Reflectance or Link/System Return Loss Using a Loss Test Set.
TIA-455-180A - Measurement of the Optical Transfer Coefficients of a Passive Branching Device (Coupler).

(Copies are available online at http://www.tiaonline.org/standards/catalog/index.cfm or from TIA, 2500 Wilson Boulevard, Suite 300, Arlington, VA 22201, USA, ATTN: Standards Department.)

D.2.3 Order of precedence. Unless otherwise noted herein or in the contract, in the event of a conflict between the text of this document and the references cited herein, the text of this document takes precedence. Nothing in this document, however, supersedes applicable laws and regulations unless a specific exemption has been obtained.

D.3 ORLM equivalent instrumentation. In addition to the requirements listed in 4.3.1 through 4.3.3 for the optical source and detection system, the requirements listed in D.3.1 through D.3.3 are applicable when an equivalent method using an optical source, three port (1x2) coupler (splitter) and power meter is used.

D.3.1 The setup shall conform to the method using a standalone coupler as shown in figure 2105-2 or otherwise conforming to D.3.2.

D.3.2 When using an equivalent method to TIA-455.107, method A (using two detectors) is more straightforward. Method B (using one detector) reduces one variable. Either method may be used. Method 1 in annex A (using one detector and mandrel wrapping) is acceptable also.

D.3.3 When using an equivalent method with a separate (standalone) coupler, the coupler insertion loss shall be determined from methods listed in TIA-455-180A. Separate test procedure for determining the insertion loss for the coupler must be submitted to the Government for approval.

D.4 Assessed risk. The supplier takes the risk of using ORLM equivalent instrumentation instead of an ORLM. The components inside the commercially available ORLM are fixed with values of parameters needed for calculation established. This provides more confidence in a reliable measurement. The values for these parameters with ORLM equivalent instrumentation must be determined. The supplier takes the risk of obtaining more conservative values due to poor setup and less precise parameter value determination.

MEASUREMENT 2106.3

ATTENUATION RATE

1. Purpose. This measurement is performed when there is the requirement to determine the amount of loss in optical power or the attenuation which occurs in an optical fiber or fiber optic cable due to absorption, scattering, bending, and other loss mechanisms in the optical fiber or fiber optic cable. Measurement 2106 is intended to standardize on the performance of this measurement, as specified in a commercial standard (TIA455.78), by imposing further refinements or boundaries (constraints). To ensure that the risk to the Government of accepting bad optical measurement data is small, to minimize test variations and to permit more accurate comparison of test results from multiple sources, a prescription approach is specified for the optical instrumentation used to obtain this measurement.

1.1 Measurement 2106 with revision designator. See 1.3 and 1.4 in Part 2 of this Standard Practice (material in beginning of Part 2) to identify the Measurement number from the revision designator and method to reference this Measurement in other documents.

2. APPLICABLE DOCUMENTS

2.1 General. The documents listed in this section are specified in sections 3, 4, and 5 of this standard practice. This section does not include documents cited in other sections of this standard practice or recommended for additional information or as examples. While every effort has been made to ensure the completeness of this list, document users are cautioned that they must meet all specified requirements of documents cited in sections 3, 4, and 5 of this standard practice, whether or not they are listed.

2.2 Non-Government publications. The following documents form a part of this document to the extent specified herein. Unless otherwise specified, the issues of these documents are those cited in the solicitation or contract.

TELECOMMUNICATIONS INDUSTRY ASSOCIATION

TIA-455.34	-	Interconnection Device Insertion Loss Test.
TIA-455.78	-	Measurement Methods and Test Procedures – Attenuation.
TIA-455-133-A	-	Measurement Methods and Test Procedures Length Measurement.

(Copies are available online at http://www.tiaonline.org/standards/catalog/index.cfm or from TIA, 2500 Wilson Boulevard, Suite 300, Arlington, VA 22201, USA, ATTN: Standards Department.)

2.3 Order of precedence. Unless otherwise noted herein or in the contract, in the event of a conflict between the text of this document and the references cited herein, the text of this document takes precedence. Nothing in this document, however, supersedes applicable laws and regulations unless a specific exemption has been obtained.

3. Definitions.

3.1 Attenuation. In an optical fiber or fiber optic cable, the decrease in power of an optical signal measured from input to output, such as measured over the entire length of an optical fiber. The attenuation can be in absolute power units, a fraction of a reference value, or in decibels. Attenuation in a fiber occurs as a result of absorption, reflection, scattering, deflection, dispersion, or diffusion rather than as a result of geometric spreading.

3.2 Attenuation rate. Attenuation for an optical fiber or fiber optic cable is usually expressed as an attenuation rate, that is, in the units of decibels/kilometer (dB/km). The attenuation is the loss in the optical signal or power level that occurs per unit of distance along its length. In dB/km, the attenuation rate, α, is given by the relation $\alpha = [10 \log10(Pi/P0)]/L$ where L is a given length of the waveguide in kilometers, Pi is the input power for the length L and P0 is the output power for the length L. In this form, the attenuation rate will be a positive value because Pi is the larger of the two powers.

MEASUREMENT 2106.3

4. Setup. A generic representation of this optical measurement setup shown in figure 2106-1 is for the spectral attenuation measurement used in initial qualification testing and shown in figure 2106-2 for the backscatter measurement that may be used as an alternate for group A testing only. Test sample configuration shall conform to 4.1 in Part 2 of this Standard Practice. Unless otherwise specified, minimum length of the test sample for optical fiber is 1.0 km. Unless otherwise specified, minimum length of the test sample for fiber optic cable is 0.5 km. These lengths apply to initial qualification test samples. Allowances are given on production lengths when specified on customer orders.

4.1 Connection at source end. No disconnection of the source end of the test sample from the source is permitted during this test.

4.2 Test equipment (for spectral attenuation measurements). The requirements listed in 4.2.1 through 4.2.4 for the optical source and detection system are applicable for the spectral attenuation measurement only.

4.2.1 Light source(s). A spectrally broad non-coherent light source shall be used with sufficient stability in optical power output and wavelength over the measurement duration. A white light source, with a tungsten-halogen lamp or a xenon arc lamp, is an example of an acceptable light source.

4.2.2 Launch conditions.

4.2.2.1 Multimode configuration. The restricted launch condition shall be used.

4.2.2.2 Single mode configuration. A mandrel with diameter specified in Measurement Support Process 2203 shall be used.

4.2.3 Monochromator. Monochromator shall be capable of being tuned in 10 nm minimum increments over the wavelength range specified. Requirement is to verify that monochromator is tuned to correct wavelength.

4.2.4 Detection system. Requirements for the detection system are listed in 4.2.4.1 through 4.2.4.7.

4.2.4.1 Optical noise floor: Sufficient to detect optical power from the DUT at wavelength being measured.

4.2.4.2 Resolution: 0.01 dB minimum.

4.2.4.3 Accuracy: 0.25 dB minimum. A percent accuracy equates to a dB conversion as follows, using ± 5 percent accuracy as an example. Think of the 5 percent as the whole number 100 ± 5 percent = 0.95 to 1.05.

Take 10 log 0.95 = -0.22 dB
Take 10 log 1.05 = +0.21 dB
Therefore, specify the accuracy as ± 0.22 dB.

4.2.4.4 Linearity: ≤ 5 percent or ≤ 0.22 dB over the range of optical power being measured.

4.2.4.5 Detector size: Sufficient active area and placed sufficiently close to the end of the fiber or geometric optical system (one using lenses to couple light into the fiber under test) to detect all the radiation emitted from it.

4.2.4.6 Detector stability: ≤ 0.1 dB/hr.

4.2.4.7 Ambient light susceptibility (recommended). Affects of ambient light into the detector need to be controlled.

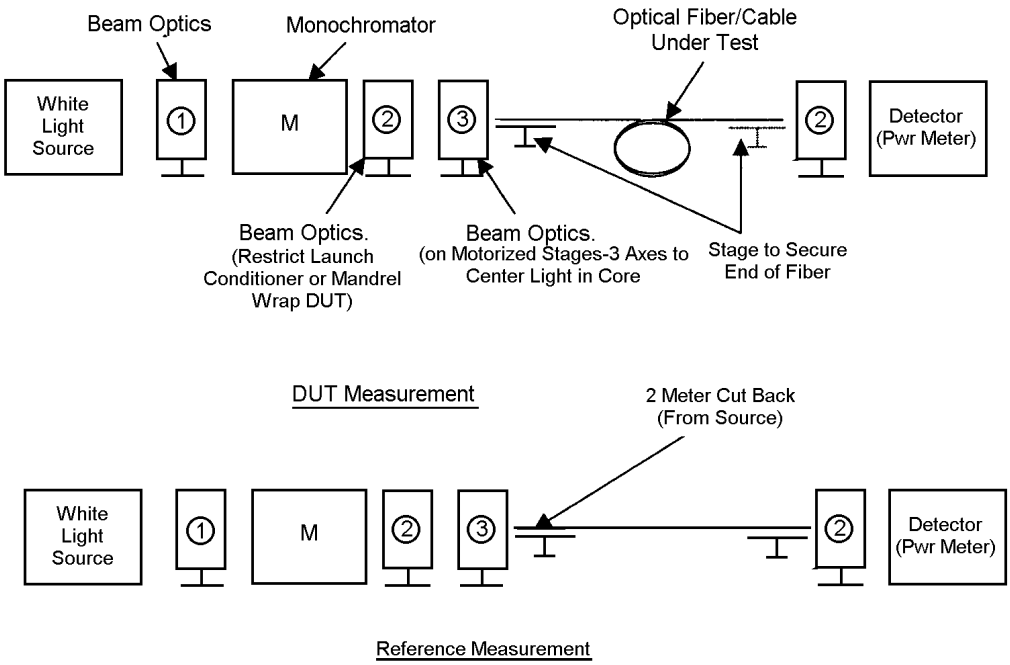

FIGURE 2106-I. Attenuation rate measurement for spectral attenuation.

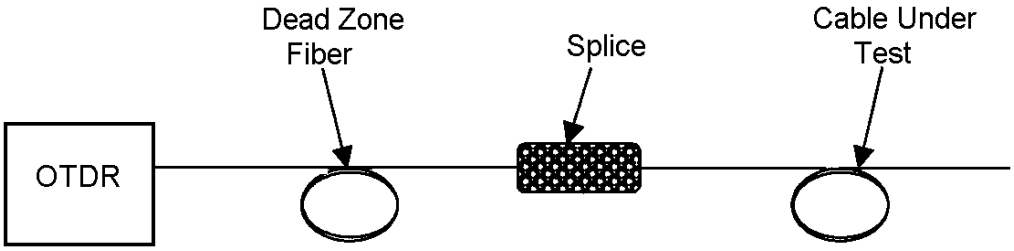

FIGURE 2106-2. Attenuation rate measurement using an OTDR.

4.2.5 Fiber interface with test equipment.

4.2.5.1 Launch end: Core alignment maximization. On the launch end, the light entering the core of the optical fiber must be uniformly overfilled, then a method used to deplete power from the higher order modes (for multimode optical fiber) or attenuate power in the second and third order modes (for single mode optical fiber).

a. Active alignment using beam optics. Active alignment using beam optics is one acceptable method to achieve a uniformly overfilled launch in the center of the core. Motorized stages (in three axes) optimize light entering the core to be uniformly overfilled. Either beam optics or other methods (such as mandrel wrapping in accordance with TIA-455.34, see Measurement 2203) may be used to obtain the required mode depletion/attenuation. Some automated optical benches for optical fiber parameter characterization, such as the Photon Kinetics Model PK2500, do active alignment using beam optics. When using an alternate method, the verification technique to ensure acceptable alignment shall be documented and employed.

b. Alternative methods. Optical fiber alignment to test equipment with a fiber optic pigtail is an alternative approach. The pigtail fiber typically has core diameter and numerical aperture matched to the test fiber. A larger fiber may be used; a smaller one may not. The pigtail fiber shall be overfilled. In this approach a mechanical splice is used to align the optical fiber with the fiber optic pigtail. The mechanical splice shall contain a guide tube, v-groove or other type alignment mechanism to align the two ends of the optical fiber. (An alignment method that presses the end faces of the two fibers together is referred to as butt-joint connection.) Index matching gel, shall be used to inhibit reflection from the end faces of the optical fiber.

c. Potential optical losses with alternative methods. With active alignment using beam optics, inspection of a cleaved fiber end face occurs. Poorly cleaved fibers shall be redone. Dirt on a cleaved fiber end face, when observed, shall be corrected (cleaned). Verification techniques for cleave quality, cleanliness, and optimal fiber alignment shall be performed when an alternate method is used. It should be noted that elevated losses are obtained with poor quality cleaves and dirt. Likewise, a very under filled launch will excite lower order mode that may result in attenuation (typically higher) which may be significantly different than otherwise would have been recorded. These verification techniques shall be a part of the test procedure/setup.

4.2.5.2 Detector end: Complete light impingement onto detector active area. On the detector end, all light exiting the optical fiber shall fall onto the active area of the detector. Items to ensure this occurrence include cleave quality, cleanliness and optical path to the detector. When active alignment with beam optics is not used, then other means for verification techniques shall be employed.

a. Cleave quality and cleanliness. As on the launch end, verification techniques shall be employed to ensure acceptable cleave quality and degree of cleanliness.

b. Light detection. Also, verification shall be provided that all light exiting the fiber does fall onto the active area of the detector. If an optical fiber pigtail is used, then the optical path to the detector may include a mechanical splice (to join the optical fiber under test to the fiber optic pigtail) and a connector interface at the detector. A larger core fiber for the fiber pigtail is one means that can be used to capture the light exiting the fiber under test. Use of a wide area detector is one method to ensure impingement/detection of all exiting light (see Measurement Support Process 2202 to verify sufficient detector surface area). Use of a power meter module with a green lens interface to the fiber pigtail is not preferred.

MEASUREMENT 2106.3

4.2.6 Functional check of optical test bench alignment, spectral attenuation measurement. Alignment shall be performed as specified in 4.2.7.3.

4.2.7 Verifications.

4.2.7.1 Verifications required for spectral attenuation.

a. Noise floor of photo-detector/power meter. Spectral attenuation measurement is obtained at a low power level for each wavelength. A photo-detector/power meter with a low noise floor must be used.

b. Spectral resolution (such as spectral bandwidth) and wavelength. Monochromator resolution (10 nm minimum) and range for both single mode and multimode fibers shall be provided. Means shall be provided to verify that correct wavelength is obtained.

c. Spatial and angular properties.

(1) Single mode. The mode launch condition used and the means to obtain that launch condition shall be provided. If a geometric optical system (one using lenses to couple light into the fiber under test) is not used, then the fiber/equipment interface shall be provided.

(2) Multimode. The multimode launch condition used and the means to obtain that launch condition shall be provided. If a geometric optical system (one using lenses to couple light into the fiber under test) is not used, then the fiber/equipment interface shall be provided. Also, the methods shall be specified that are used to verify/produce a beam to control spot size and numerical aperture and to center the launch spot on the fiber core.

4.2.7.2 Verifications required for attenuation rate at specified wavelengths using an OTDR.

a. Wavelength. Verify that the OTDR modules used conform to the specified wavelengths.

b. Dynamic range. Verify that the OTDR can cover the dynamic range for the minimum and maximum fiber/cable lengths to be measured.

c. Launch conditions. Verify requirement conformance with the methods employed to obtain both single mode and multimode light launch conditions.

d. Group delay index. Verify use of a table for the group delay index of the optical fiber being tested or use of a procedure to determine the group delay index for each optical fiber.

4.2.7.3 Functional check of optical test bench alignment, spectral attenuation measurement. Verify that the optical test bench used in the spectral attenuation measurement is aligned. One approach that may be taken to functionally check the alignment is to use standard test reels. A standard test reel is one with “known values” that the optical fiber manufacturer recorded for that specific reel of optical fiber. The same two meter pieces may be reused to simulate the cut-back. The functional check is performed by comparing values between the optical fiber manufacturers with those of the optical test bench in which the alignment is being verified. Other methods to perform this functional check may be used contingent upon Government approval.

MEASUREMENT 2106.3

5. Test procedures.

5.1 Test method verifications. The checklist in appendices A and B is provided to ensure compliance for inspection purposes. Maximum allowed values for selected fiber optic components are tabulated in appendix C.

5.2 Initial qualification. A spectral attenuation test shall be performed for attenuation rate that covers the wavelength range from 800 to 1,550 nm. A table of wavelength versus attenuation shall be provided. The intent is to have an initial record of the cable performance/characteristics throughout the specified measurement range. Spectral attenuation shall be performed at a sufficient number of wavelengths to cover the applicable optical transmission windows and sources for attenuation. Sufficient coverage includes the optical transmission windows (850, 1,300, 1,310 and 1,550 nm), ultraviolet absorption band (600 to 870 nm), Rayleigh scattering losses (800 to 1,200 nm), OH impurity absorption peaks (945, 1,249 and 1,383 nm) and infrared absorption (1,600 to 1,700 nm). Use of a source and power meter to perform this measurement is not acceptable.

5.2.1 Multimode. Test shall be performed in accordance with TIA-455.78, method A. Light launch conditions for the spectral attenuation measurements may be performed using beam optics to attenuate the transient modes to steady state (see limited phase space launch). As an alternative, beam optics may be used to obtain a launch with excited modes followed by a mandrel wrap mode filter to attenuate the transient modes to steady state.

5.2.2 Single mode. Test is to be performed in accordance with TIA-455.78, method A. Light launch conditions for the spectral attenuation measurements shall be performed at a wavelength greater than or equal one in which the fiber is single mode. The higher order mode filter consists of a mandrel or other device that keeps the fiber being tested in a controlled bend. The diameter of the bend and number of turns are the two key parameters. TIA455.78 cites another example of a higher order mode filter (single loop of radius sufficiently small to shift cut-off wavelength below the minimum wavelength of interest).

5.3 Quality conformance inspections (Group A testing). The test for attenuation rate at the wavelengths of operation (850 nm and 1,300 nm for multimode, 1,310 nm and 1,550 nm for single mode) may be provided in lieu of a spectral attenuation test specified in 5.1. This method of measurement is acceptable only when attenuation rate measurement is restricted to the transmission window of interest.

5.3.1 Use of OTDR for group A attenuation test, single mode. Method C of TIA-455.78 can be used with single mode fiber when launch conditions for the attenuation measurement is done as listed under method A using a mandrel with a diameter as specified in Measurement Support Process 2203.

5.3.2 Use of OTDR for group A attenuation test, multimode. Method C of TIA-455.78 can be used with multimode fiber when launch conditions for the attenuation measurement is done using a mandrel wrap mode filter or as specified in Measurement Support Process 2203.

5.3.3 Limited scope.

5.3.3.1 Group A only. The attenuation procedure submitted should contain a note that the OTDR method employed is limited to use for group A inspections only. This method is not to be used for initial qualification.

5.3.3.2 Single mode and multimode. This procedure is valid for group A inspections for both single mode and multimode fiber.

5.4 Group delay index. The group delay index of the optical fiber is required to perform the OTDR measurement accurately. A procedure for determining the group delay index, when it is not known, shall be included in the procedure (refer to equation A.1 of TIA-455-133-A using a known fiber length).

MEASUREMENT 2106.3

5.5 Test synopsis.

5.5.1 Spectral attenuation using cut-back method.

5.5.1.1 Verify suitable optical alignment and launch conditions.

5.5.1.2 Set monochromator for next wavelength in which test is to be performed.

5.5.1.3 Perform DUT measurement. Mandrel wrap the DUT (reel of fiber or cable), after interface with the launch end beam optics, with sufficient turns to obtain specified launch condition. Another specified mode filter can be employed instead. Record the value of P_B, the optical power of the DUT.

5.5.1.4 Perform the reference measurement. Maintain connection interface at the launch end and the mandrel wrap. Cut-back the DUT (reel of fiber or cable) to a 2 ± 1 meter length from the launch end and connect to detector. Record the value of P_A, the optical power of the 2 meter length.

5.5.1.5 Calculate the attenuation rate for that particular wavelength.

5.5.1.6 Repeat test for other wavelengths of light required.

5.5.2 Attenuation rate at specified wavelength using OTDR. Attenuation rate at specified wavelength using OTDR (such as backscattering method, method C in accordance with TIA-455.78). See measurement 2106 appendix D for a sample of an OTDR attenuation measurement in accordance with MIL-STD-2042.

5.5.2.1 Insert applicable source module into OTDR for next wavelength in which test is to be performed.

5.5.2.2 Connect dead zone fiber to OTDR source module. (Ensure dead zone fiber size is compatible to the DUT).

5.5.2.3 Enter correct fiber parameters (including Group Delay Index).

5.5.2.4 Mandrel wrap the DUT (reel of fiber or cable), after interface with the dead zone fiber, with sufficient turns to obtain specified launch condition (if not already done).

5.5.2.5 Perform DUT measurement. Some varieties of OTDR do this measurement automatically, with others cursor movements are required to obtain values for calculating parameters of interest. Step-by-step measurement process must be part of the test procedure.

5.5.2.6 Record the value of attenuation rate and length of DUT. Calculate the attenuation rate for that particular wavelength if not done so automatically.

5.5.2.7 Repeat test for other wavelengths of light required.

MEASUREMENT 2106.3

5.6 Calculations.

5.6.1 Spectral attenuation for each wavelength.

$$A(\lambda) = -10 \text{ Log } [(P_B(\lambda)/P_A(\lambda)]$$

Where:
$A(\lambda)$ = Spectral attenuation at wavelength λ.
$P_B(\lambda)$ = Optical power of the DUT (such as measurement with a reel of fiber optic cable or optical fiber).
$P_A(\lambda)$ = Optical power after the reel of cable/fiber has been cut back to 2 ± 1 meter (6.6 ± 3.3 feet) from the optical source end (such as measurement with the 2 meter, cutback length).

5.6.2 Spectral attenuation coefficient for each wavelength. The TIA-455.78 terminology for this parameter is attenuation coefficient. In the military specifications this same parameter is referred to as the attenuation rate.

$$\alpha(\lambda) = [A(\lambda)/L]$$

Where:
a (λ) = Spectral attenuation coefficient (or spectral attenuation rate) at wavelength λ.
$\alpha(\lambda)$ = Spectral attenuation at wavelength λ.
L = Length of the DUT in kilometers.

5.7 Data sheet. In addition to the items for the standard data sheet listed in Measurement Support Process 2201, the data sheet is to include 5.7.1 and 5.7.2.

5.7.1 Qualification.

5.7.1.1 Attenuation rate table. At a minimum, a table of wavelength versus attenuation rate shall be provided.

5.7.1.2 Length. Length of each DUT for which the attenuation rate is provided.

5.7.1.3 Attenuation rate plot (optional). The attenuation rate at the specific wavelengths plotted against wavelength.

5.7.2 Quality conformance (Group A).

5.7.2.1 Attenuation rate. At a minimum, the attenuation rate at each wavelength specified shall be provided.

5.7.2.2 Length. Length of each DUT for which the attenuation rate is provided.

MEASUREMENT 2106.3

APPENDIX A

MINIMUM ESSENTIAL CHECKLIST FOR ATTENUATION RATE MEASUREMENT, SPECTRAL ATTENUATION

A.1 Purpose. This appendix addresses a checklist of the minimum essentials to measure the attenuation rate for the spectral attenuation.

A.2 Usage. Table 2106 A-I is the checklist of minimum essentials for Government auditors, or their representatives, use during inspections. This checklist should be expanded at the auditor's discretion.

TABLE 2106 A-I. Minimum essential checklist for attenuation rate measurements, spectral attenuation.

Item	Category	Description	Requirement	Compliance
1	Test sample configuration	Cable assembly length:		
		Optical fiber	1,000 meters minimum	
		Fiber Optic cable	500 meters minimum	
2	Room ambient environmental Condition	Standard ambient (if test equipment built to operate in this range, if not-then controlled ambient)	23 ± 5ºC/73 ± 9ºF and 20 to 70 percent RH	
		Controlled ambient	23 ± 2ºC/73 ± 4ºF and 45 to 55 percent RH	
3	Test condition	Test setup cable routing	Bend diameters ≥ min long term bend diameter	
			Sharp twists and bends avoided	
			Avoid protrusions/other obstacles	
4	Environmental chamber charts	Temperature and humidity profiles recorded	Chart, stored data on disk, other approved means	
			Includes chamber model and serial, date of test	
	Test equipment	Pertains to items 5 to 8		
5	Light source (white light)	Source type: broad spectrum, non-coherent	white light: tungsten-halogen or xenon arc lamp	
		Optical power stability	≤ 0.1 dB/hr.	
6	Detector	Optical noise floor	Must detect optical power at each wavelength	
		Resolution	0.01 dB minimum	
		Accuracy	0.25 dB minimum	
		Linearity: over the range of optical power measured	≤ 5 percent or ≤ 0.22 dB (see section 4.9 of Measurement Support Process 2202 for conversion)	
		Detector size	sufficient active area and placed sufficiently close to the end of the fiber to detect all the radiation emitted from it (captures light – both spatial and angular)	
		Detector stability	≤ 0.1 dB/hr.	
		Measurement repeatability	Less than 3 percent variation	
		Ambient light susceptibility (recommended)	Detector unit sealed to extent that not exposed to ambient light (shielded as practicable)	

MEASUREMENT 2106.3

APPENDIX A

TABLE 2106 A-I. Minimum essential checklist for attenuation rate measurements, spectral attenuation - Continued.

Item	Category	Description	Requirement	Compliance
7	Monochromator	Use over specified wavelength range	Tune in 10 nm increments or less	
		Resolution	Wavelength change ≤ 10 nm	
		Tuned to correct wavelength	Verify method that correct wavelength obtained	
8	Calibration of attenuation rate measurement	One approach for acceptance:	Use standard reels with "known" values	
			Same 2 m piece may be used for cut-back, but only for standard reel (not DUT test)	
			Other methods: need Government approval	
	Launch conditions	Pertains to items 9 to 10		
9	Single mode	If geometric system not used	Fiber/equipment interface must be provided	
			Method to determine spatial and angular properties provided	
10	Multimode	Test setup If geometric system not used	Obtain launch condition	
			Control spot size and NA	
			Center launch spot on fiber core	
			Fiber/equipment interface must be provided	
			Method to determine spatial and angular properties provided	
11	Test setup	Items to inspect for compliance	No switching system	
			No splicing of cable assembly	
			Hi order mode fill at source end of each DUT/each channel	
		Items to minimize variation in test	Secure/tie down cables (no move at instr. ports)	
			In line approach to and from connection for mates	
			Use of substantial fixtures (no wobbling)	
12	Test procedure (spectral)	Approved test procedure	Compliance with Measurement Support Process 2201	
		Maintain setup during test (source end)	No detachment of DUT cable from source	
		Optical alignment and launch conditions	Verify suitability (per procedure)	
		Set monochromator to next wavelength in test	Verify correct wavelength (if required)	
		Perform DUT measurement	Mandrel wrap DUT, source end, with sufficient turns to obtain launch condition, record value	
		Perform reference measurement	Maintain source end connection interface	
			Cut-back 2 m from launch end, record measurement for 2 m length	
		Calculate attenuation rate	For that particular wavelength	
		Repeat test	For each wavelength to be measured	

MEASUREMENT 2106.3

APPENDIX A

TABLE 2106 A-I. Minimum essential checklist for attenuation rate measurements, spectral attenuation - Continued.

Item	Category	Description	Requirement	Compliance
13	Calculation	Equation to give value in dB/km	Verify proper method if operator performed	
		Sign convention	Recorded attenuation as positive value	
14	Data sheet	Approved data sheet	Compliance with Measurement Support Process 2201	
		At minimum, provide table	Attenuation rate versus wavelength	
		Record length	Length of DUT for attenuation rate provided	
		Attenuation rate plot (optional)	Attenuation rate plotted against wavelength	
15	Pass/fail criteria	Proper criteria specified	Conforms with MIL-SPEC parameters and values	
		Proper criteria implemented	Test operators knows if fail and to verify result	

A.3 Notes.

A.3.1 Intended use.

A.3.1.1 Audit team. This checklist is intended to assist Government auditors or their representatives during inspections of the optical measurement system. This checklist may be augmented at the auditor's discretion; however, it is not to be reduced.

A.3.1.2 Test laboratories. When test laboratories prepare to perform optical measurements or audits, this checklist should be used to supplement Measurement 2106, not replace it.

MEASUREMENT 2106.3

APPENDIX B

MINIMUM ESSENTIAL CHECKLIST FOR ATTENUATION RATE, OTDR MEASUREMENT

B.1 Purpose. This appendix addresses a checklist of the minimum essentials to measure the attenuation rate for the OTDR measurement. This measurement for attenuation rate, when used, will be only for the group A conformance testing.

B.2 Usage. Table 2106 B-I is the checklist of minimum essentials for Government auditors, or their representatives, use during inspections. This checklist should be expanded at the auditor's discretion.

TABLE 2106 B-I. Minimum essential checklist for attenuation rate OTDR measurements.

Item	Category	Description	Requirement	Compliance
1	Test sample configuration	Cable assembly length:		
		Optical fiber	1,000 meters minimum	
		Fiber Optic cable	500 meters minimum	
2	Room ambient environmental Condition	Standard Ambient (if test equipment built to operate in this range, if not-then controlled ambient)	23 ± 5ºC/73 ± 9ºF and 20 to 70 percent RH	
		Controlled Ambient	23 ± 2ºC/73 ± 4ºF and 45 to 55 percent RH	
3	Test condition	Test setup cable routing	Bend diameters ≥ min long term bend diameter	
			Sharp twists and bends avoided	
			Avoid protrusions/other obstacles	
4	Environmental chamber charts	Temperature and humidity profiles recorded	Chart, stored data on disk, other approved means	
			Includes chamber model and serial, date of test	
	Test equipment	Pertains to item 5		
5	OTDR	Optical noise floor	Must detect optical power at each wavelength	
		Resolution	0.01 dB minimum	
		Accuracy	0.25 dB minimum	
		Measurement repeatability	Less than 3 percent variation	
	Launch conditions	Pertains to items 6 to 8		
6	Multimode	Overfilled	Not applicable (N/A) for this test	N/A
7	Multimode	Restricted launch	Compliance with Measurement Support Process 2203	
8	Single mode	Reduce higher order modes	Compliance with Measurement Support Process 2203	

MEASUREMENT 2106.3

APPENDIX B

TABLE 2106 B-I. Minimum essential checklist for attenuation rate OTDR measurements - Continued.

Item	Category	Description	Requirement	Compliance
9	Test setup	Dead zone fiber reel	Same fiber size as DUT	
			Splicing o.k. to attach dead zone fiber to DUT	
			Launch condition at source end of each DUT/each channel	
		Items to minimize variation in test	Secure/tie down cables (no move at instr. ports)	
			Group Delay Index found, if not known	
			Fiber parameters entered correctly into OTDR	
10	Test procedure (spectral)	Approved test procedure	Compliance with Measurement Support Process 2201	
		Maintain setup during test (source end)	No detachment of DUT cable from source	
		Insert applicable source module into OTDR	Correct wavelength (MM: 850/1,300, SM: 1,310/1,550 nm)	
		Attach dead zone fiber to OTDR and DUT	Splice/index matching gel okay at DUT interface	
		Verify launch condition	Mandrel wrap DUT, source end	
		Perform measurement	If not automatic, perform cursor operations to obtain parameters for calculation	
		Calculate attenuation rate	For that particular wavelength	
		Repeat test	For each wavelength to be measured	
11	Calculation	Equation to give value in dB/km	Verify proper method if operator performed	
		Sign convention	Recorded attenuation as positive value	
12	Data sheet	Approved data sheet	Compliance with Measurement Support Process 2201	
		At minimum, at each wavelength specified	Usually MM: 850, 1,300; SM: 1,310, 1,550 nm	
		Record length	Length of DUT for attenuation rate provided	
13	Pass/fail criteria	Proper criteria specified	Conforms with MIL-SPEC parameters and values	
		Proper criteria implemented	Test operators knows if fail and to verify result	

B.3 Notes.

B.3.1 Intended use.

B.3.1.1 Audit team. This checklist is intended to assist Government auditors or their representatives during inspections of the optical measurement system. This checklist may be augmented at the auditor's discretion; however, it is not to be reduced.

B.3.1.2 Test laboratories. When test laboratories prepare to perform optical measurements or audits, this checklist should be used to supplement Measurement 2106, not replace it.

MEASUREMENT 2106.3

APPENDIX C

MAXIMUM ALLOWED VALUES FOR ATTENUATE RATE MEASUREMENTS

C.1 Purpose. This appendix provides in tabular format the maximum allowed values for attenuation rate that are specified in various military fiber optic component specifications for optical fiber and fiber optic cable. Also, this appendix provides in tabular format the maximum allowable change in attenuation for fiber optic cable.

C.2. APPLICABLE DOCUMENTS

C.2.1 General. The documents listed in this section are specified in sections 3, 4, and 5 of this standard practice. This section does not include documents cited in other sections of this standard practice or recommended for additional information or as examples. While every effort has been made to ensure the completeness of this list, document users are cautioned that they must meet all specified requirements of documents cited in sections 3, 4, and 5 of this standard practice, whether or not they are listed.

C.2.2 Government documents.

C.2.2.1 Specifications, standards, and handbooks. The following specifications, standards, and handbooks form a part of this document to the extent specified herein. Unless otherwise specified, the issues of these documents are those cited in the solicitation or contract.

MIL-PRF-49291 - Optical Fiber (Metric), General Specification for.
MIL-PRF-85045 - Fiber Optic Cables (Metric), General Specification for.

(Copies of these documents are available online at https://quicksearch.dla.mil.)

C.2.3 Order of precedence. Unless otherwise noted herein or in the contract, in the event of a conflict between the text of this document and the references cited herein, the text of this document takes precedence. Nothing in this document, however, supersedes applicable laws and regulations unless a specific exemption has been obtained.

C.3 Pass/fail criteria (generic). The attenuation rate will not exceed the values specified in table 2106 C-I. The change in attenuation for fiber optic cable will not exceed the values specified in table 2106 C-II. For initial qualification, the pass/fail criteria include both the attenuation rate and the attenuation change. For group A testing, only the attenuation rate is required.

C.4 Intended use. Table 2106 C-I and table 2106 C-II provides pass/fail criteria to assist Government auditors, or their representatives, during documentation reviews (such as test procedures and test reports) and inspections. Revisions to the military specifications supersede any values found in table 2106 C-I and table 2106 C-II.

MEASUREMENT 2106.3

APPENDIX C

TABLE 2106 C-I. Maximum allowed attenuation rate.

DUT (Optical fiber, cable)	Maximum allowable attenuation rate (dB/km) at wavelength (nm) to be measured			
	Single mode		Multimode	
	dB/km at 1310 ± 20 nm	dB/km at 1550 ± 20 nm	dB/km at 850 ± 20 nm	dB/km at 1300 ± 20 nm
MIL-PRF-49291	0.4	0.3	3.5	1.0
MIL-PRF-85045 General	1.0	1.0	4.5	2.0
MIL-PRF-85045/16	1.0	1.0	4.5	2.0
MIL-PRF-85045/17	1.5	1.5	4.5	2.0
MIL-PRF-85045/18	1.5	1.5	4.5	2.0
MIL-PRF-85045/20	1.5	1.5	5.6	2.0
MIL-PRF-85045/21	2.0	2.0	4.5	2.0
MIL-PRF-85045/22	1.0	1.0	4.5	2.0
MIL-PRF-85045/23	2.0	2.0	4.5	2.0
MIL-PRF-85045/24	2.0	2.0	4.5	2.0
MIL-PRF-85045/27	0.75	0.75	3.75	1.25
MIL-PRF-85045/29	0.75	0.75	3.75	1.25

TABLE 2106 C-II. Maximum allowable change in attenuation.

DUT (Optical fiber, cable)	Maximum allowable change in attenuation (dB/km) at wavelength (nm) to be measured			
	Single mode		Multimode	
	dB/km at 1310 ± 20 nm	dB/km at 1550 ± 20 nm	dB/km at 850 ± 20 nm	dB/km at 1300 ± 20 nm
MIL-PRF-85045, Multiple fiber cable, tight buffer, Shipboard	0.5	0.5	1.0	1.0
MIL-PRF-85045 Multiple fiber cable, tight buffer, Tactical	0.3	0.3	0.5	0.5
MIL-PRF-85045, Single fiber cable, tight buffer	0.5	0.5	1.0	1.0

MEASUREMENT 2106.3

APPENDIX D

SYNOPSIS OF OTDR ATTENUATION MEASUREMENT

D.1 Purpose. This appendix provides a synopsis to perform an attenuation measurement when using an Optical Time Domain Reflectometer (OTDR). This appendix is meant to assist auditing and documentation reviews for verifying attenuation rate measurements at wavelengths of operation are performed correctly. This means to perform the attenuation rate at the wavelengths of operation (850 nm and 1,300 nm for multimode, 1,310 nm and 1,550 nm for single mode) may be used in lieu of a spectral attenuation test for conformance inspections (Group A testing), but not for initial qualification testing.

D.2. APPLICABLE DOCUMENTS

D.2.1 General. The documents listed in this section are specified in sections 3, 4, and 5 of this standard practice. This section does not include documents cited in other sections of this standard practice or recommended for additional information or as examples. While every effort has been made to ensure the completeness of this list, document users are cautioned that they must meet all specified requirements of documents cited in sections 3, 4, and 5 of this standard practice, whether or not they are listed.

D.2.2 Government documents.

D.2.2.1 Specifications, standards, and handbooks. The following specifications, standards, and handbooks form a part of this document to the extent specified herein. Unless otherwise specified, the issues of these documents are those cited in the solicitation or contract.

DEPARTMENT OF DEFENSE STANDARD

MIL-STD-2042 - Fiber Optic Cable Topology Installation, Standard Methods for Naval Ships.

(Copies of these documents are available online at https://quicksearch.dla.mil.)

D.2.3 Order of precedence. Unless otherwise noted herein or in the contract, in the event of a conflict between the text of this document and the references cited herein, the text of this document takes precedence. Nothing in this document, however, supersedes applicable laws and regulations unless a specific exemption has been obtained.

D.3 Definitions.

D.3.1 Optical time domain reflectometer (OTDR). A device used to characterize an optical waveguide, such as an optical fiber, by means of reflectometry.

D.3.2 Optical time domain reflectometry. A method for characterizing an optical fiber wherein an optical pulse is coupled into the fiber and the light that is backscattered or reflected back to the input is measured as a function of time. The method is useful in estimating the attenuation rate of the fiber, that is, the optical attenuation coefficient, as a function of distance; identifying the nature and location of defects; determining other localized losses, such as insertion losses caused by fiber optic connectors, couplers, and splices; and measuring other parameters of optical fibers and other components. The distance to a reflection interface surface or other discontinuity is determined by measuring the time it takes for a light pulse to travel to the discontinuity and back. Reflection surfaces include the ends of fiber optic cables, breaks in fibers, splices, connector interfaces, cracks, fractures, or other anisotropic features and discontinuities of the propagation medium. The measurement equipment is called an optical time domain reflectometer. It displays the reflected waves on a time axis for precise reading by showing, for example, the leading edge of a transmitted optical pulse and the various reflections that occur, usually before the next pulse is launched.

MEASUREMENT 2106.3

APPENDIX D

D.4 Synopsis of method. Minimum requirements for test procedures are those specified in 4.1 and 4.2 with the further details specified in 5 herein and individual measurements in this Standard Practice.

D.4.1 Setup OTDR in accordance with figure 6B1-3 of MIL-STD-2042.

D.4.1.1 Connect a 50 meter dead zone cable to the OTDR optical port.

D.4.1.2 Place a ST-to-ST adapter on the other end of the dead zone jumper.

D.4.1.3 Set the OTDR parameters as listed in D.4.1.3.1 through D.4.1.3.5 per this measurement.

D.4.1.3.1 Pulse width: use 20 ns pulse width.

D.4.1.3.2 Dynamic range: 1 km.

D.4.1.3.3 Group (refractive) index: Refer to 4.2.7.2.d or 5.4.

D.4.1.3.4 Back scatter coefficient: -74 (for 1,300 nm, 62.5/125 micron fiber).

D.4.1.3.5 Time for average measurement mode: 1 minute.

D.4.2 Prepare one fiber on the cable end using procedure I, method 6B1 of MIL-STD-2042. Strip lengths may vary depending on the bare fiber adapter used.

D.4.3 Place the bare fiber adapter on the end of a stripped fiber.

D.4.3.1 Clean bare fiber end using tape.

D.4.3.2 Examine end face under 400X microscope to verify that end face is clean and not shattered.

D.4.4 Connect ST-to-ST adapter on end of dead zone jumper to the bare fiber adapter.

D.4.4.1 Ensure that the setup is not disturbed during the OTDR average measurement.

D.4.4.2 Ensure that the fiber exiting the bare fiber adapter is not placed in a tight bend.

D.4.5 Actuate the OTDR for the average measurement mode (as opposed to placing in the real time mode).

D.4.5.1 Use caution as the LASER will be actuated for the duration of the average measurement (1 minute). Observe LASER safety precautions.

D.4.5.2 If waveform drops several dB after Z_3 (see figure 2106 D-1), then fiber is shattered (or there is a poor fiber cleave). Re-cleave fiber and repeat measurement.

MEASUREMENT 2106.3

APPENDIX D

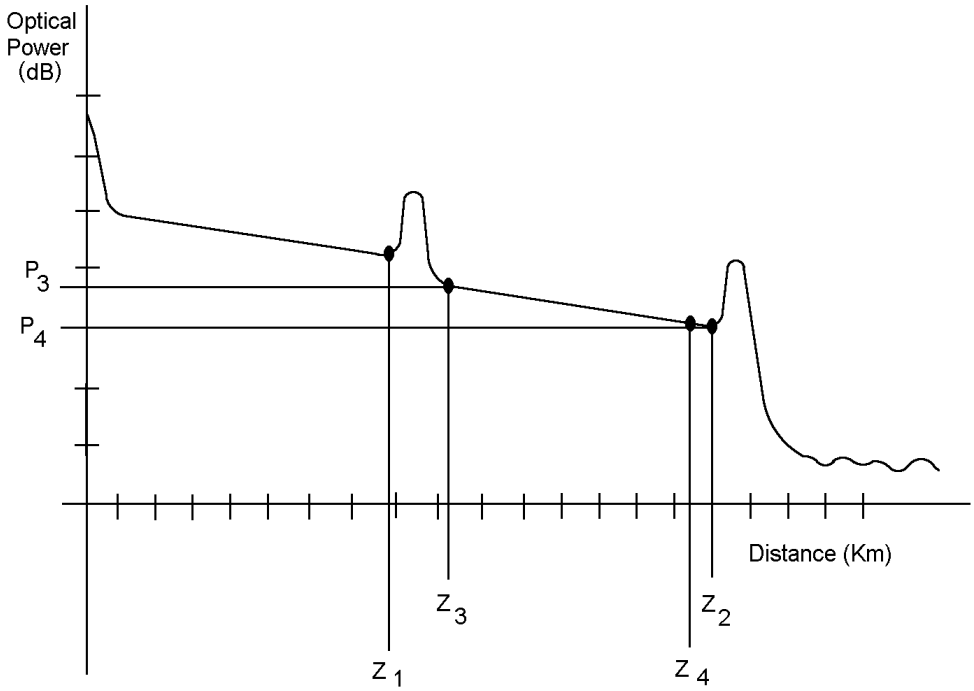

FIGURE 2106 D-1 OTDR waveform.

D.4.6 Find and record the cable lengths by placing cursors A and B on locations Z_1 and Z_2.

D.4.7 Find and record the attenuation in dB for the length Z_4 - Z_3.

D.4.7.1 Observe that Z_4 - Z_3 is the linear portion of the trace for the cable under test.

D.4.7.2 If the OTDR does not display cable attenuation, then calculate attenuation using the following formula: Attenuation (dB/km) = B =(P_3 - P_4)/(Z_4 - Z_3) in accordance with figure 2106 D-1. Multiply the result by the cable length in km.

D.4.7.2 If the OTDR displays the attenuation for Z_2 - Z_3, then that value may be recorded in lieu of the attenuation for Z_4 - Z_3.

SUPPORT PROCESSES FOR OPTICAL MEASUREMENT

(2201-2203)

MEASUREMENT SUPPORT PROCESS 2201.1

TEST PROCEDURES

1. Purpose. This support process supplements the measurements in this Standard Practice by specifying the minimum requirements for test documentation, specifically the test procedure. The minimum requirements for a data sheet are specified also since each test procedure is to include a data sheet layout (such as a sample data sheet with no data filled in). Measurement Support Process 2201 is intended to standardize on the minimum requirements for this measurement, which is one of the support processes for the other measurements in this Standard Practice. To ensure that the risk to the Government of accepting bad measurement data is small, to minimize test variations, and to permit more accurate comparison of test results from multiple sources, a prescription approach is specified for requiring detailed test procedures that includes data sheets.

1.1 Measurement 2201 with revision designator. See 1.3 and 1.4 in Part 2 of this Standard Practice (material in beginning of Part 2) to identify the Measurement number from the revision designator and method to reference this Measurement in other documents.

2. Definitions.

2.1 Fiber optic test method (FOTM). A general description of the overall approach to the testing of fiber optic component, identifying the component to be tested, the type and nature of the test, the parameters to be measured, and the environmental conditions under which the test is to be conducted. The FOTM does not explicitly describe in every detail the exact steps to be taken during the conduct of the test. Engineering analysis is required and one or more fiber optic test procedures (FOTPs) must be prepared before an FOTM can be executed. Also see fiber optic test procedure (FOTP).

2.2 Fiber optic test procedure (FOTP). A detailed, highly-explicit, unambiguous, stand-alone, step-by-step sequence of actions, or the document describing them, for testing fiber optic components, each step precisely described, with all dimensions, instrument settings, apparatus, structures, parameters to be measured, environmental conditions, exact action to be taken at each step, and data to be taken, clearly described for each part or run of the test. An FOTP can be executed without additional engineering analysis. FOTPs are usually prepared from or based on prepared fiber optic test methods (FOTMs). Also see fiber optic test method (FOTM).

2.3 Internal test procedure. A vendor/test laboratory prepared internal test procedure for each test method. These internal test procedures will translate the military test method into company language applicable to the specific test equipment being used. These internal test procedures will be reviewed during the audit to assure understanding and compliance to the applicable military test standard. Test personnel must be available to operate the equipment. All operating instructions and calibration records must be up-to-date and available for review.

3. General measurement criteria. Minimum requirements for test procedures are those specified in 3.1 and 3.2 with the further details specified in 4 herein and individual measurements in this Standard Practice.

3.1 Test procedure. Information must be in the test procedure as opposed to referencing the military specification or commercial standard for particular information such as figures, tables, or calculations.

3.1.1 Deviations from requirements. Test procedures to military specifications are specific and “interpretations” by other parties are not permitted.

3.1.2 Source for clarifications. Any clarifications required are to be addressed through the qualifying activity (such as DLA Land and Maritime-VQP).

3.2 Data sheets. Data sheet layouts for each optical test performed (such as sample data sheet) and sample calculations will be included in the procedures submitted.

3.2.1 Pass/fail criteria column. Data sheet will be specific with respect to items such as pass/fail criteria. Operators/test laboratory personnel are expected to make a judgment if the item passed or failed. The pass/fail criteria will be clearly denoted.

3.2.2 Pass/fail rating. For purposes of testing to a military specification, the items either passed or failed. No other classification, such as “deviation”, or other category/terminology will be used. A phrase such as “or as specified by the vendor” is not appropriate for a qualification to a military specification and will not be included in the wording of any test procedure.

3.2.3 Optical tests. Data sheet for each optical test will list those items not covered on any general data sheet. A separate optical measurement data sheet will be provided for each test in which an optical measurement was performed as part of that test.

4. Specific measurement requirements. Test procedures (including inspection procedures) shall be specific to the equipment/instruments used to perform the test, shall have sufficient detail so that someone with minimal training can "step in" and perform the test and shall include the elements listed in 4.1 through 4.2.

4.1 Test procedure.

4.1.1 Setup procedure or sufficiently detailed schematic, as appropriate. The preference is to be very specific with the figure(s), diagram(s), or drawing(s), so that less detail is needed in description (words) to do the setup. Unique features of the setup shall be more descriptive.

4.1.2 Step-by-step test method specific to the equipment/instruments to be used and to the component(s) being tested.

4.1.3 Pass/fail criteria (to specification requirements).

4.1.4 Equipment list or specific reference to one.

4.1.5 Reference documentation must be listed. Also, latest version of military and commercial specifications cited in the component specification must be available and shown during the audit.

4.1.6 Sample calculations shall be included for these methods where mathematical equations are used to determine the results. This requirement is waived if calculations are performed by the instrumentation or if data is entered into a spreadsheet for calculations to be performed.

4.2 Data sheet where standard data sheet is not used or appropriate. Data sheet (or standard data sheet, as appropriate) is to include the following information: Test performed, performed by, start date, end date, start time, end time, test sample description, test sample model number, test sample serial number (if applicable), test sample manufacturer, lab temperature during test, lab humidity during test, test procedure used, test requirements (pass/fail criteria), reference specifications, test equipment (manufacturer, model number, serial number, equipment accuracy, calibration due date), remarks (space to record discrepancies and unexpected events.), test data, indication of pass/fail, the data. Items other than the data may be summarized on a separate sheet or referenced to other sections of the test report.

MEASUREMENT SUPPORT PROCESS 2201.1

APPENDIX A

MINIMUM ESSENTIAL CHECKLIST FOR TEST PROCEDURE CONTENTS

A.1 Purpose. This appendix addresses a checklist of the minimum essentials for the contents found in test procedures.

A.2 Usage. Table 2201 A-I is the checklist of minimum essentials for Government auditors, or their representatives, use during inspections. This checklist should be expanded at the auditor's discretion.

TABLE 2201 A-I. Minimum essential checklist for optical test procedure content.

Item	Category	Description	Requirement	Compliance
	General			
1	Setup	Preference: Sufficiently detailed schematic	Figures/diagrams very specific	
			Unique features more descriptive (in narrative)	
		Alternate: Narrative	Detail sufficient to ensure proper test setup	
2	Test method	Content	Step-by-step	
			Specific to test lab equipment used for the test	
			Specific to DUT being tested	
3	Pass/fail criteria	Listed as range or other format easily understood by operator	Specific to DUT being tested	
4	Equipment list	Specific to test lab equipment used for the test	List of equipment or reference to it in another document	
5	Reference documentation	Component spec with military and commercial specs listed in component spec	Use latest version of each spec	
			Available during audit	
6	Sample calculations	Applicability: Test methods where equations cited to calculate results	Equation along with sample calculation shown	
		Exception: Instrumentation performs calculation	Verification that result determined using equations cited in military/commercial spec	
		Exception: Calculation performed on spreadsheet	Verification correct equation used and independent confirmation of result obtained	
	Added items	Specific to test		
7	Test being performed		Compliance with applicable MIL-STD-1678 Measurement and specified test method	

A.3 Notes.

A.3.1 Intended use.

A.3.1.1 Audit team. This checklist is intended to assist Government auditors or their representatives during inspections of the optical measurement system. This checklist may be augmented at the auditor's discretion; however, it is not to be reduced.

A.3.1.2 Test laboratories. When test laboratories prepare to perform optical measurements or audits, this checklist should be used to supplement Measurement Support Process 2201, not replace it.

MEASUREMENT SUPPORT PROCESS 2201.1

APPENDIX B

MINIMUM ESSENTIAL CHECKLIST FOR OPTICAL TEST DATA SHEETS

B.1 Purpose. This appendix addresses a checklist of the minimum essentials for parameters listed on an optical test data sheet.

B.2 Usage. Table 2201 B-I is the checklist of minimum essentials for Government auditors, or their representatives, use during inspections. This checklist should be expanded at the auditor's discretion.

TABLE 2201 B-I. Minimum essential checklist for optical test data sheet.

Item	Category	Description	Requirement	Compliance
1	General	Parameters 1 to 22 on data sheet	Test performed	
2			Performed by	
3			Dates: start, end	
4			Times: start, end	
5			DUT description	
6			DUT model number	
7			DUT serial # (if applies)	
8			DUT manufacturer	
9			Lab temperature during test	
10			Lab humidity during test	
11			Test procedure used	
12			Pass/fail criteria	
13			Reference specifications	
14			Test equipment:	
15			Test equipment: manufacturer	
16			Test equipment: model #	
17			Test equipment: serial #	
18			Test equipment: accuracy	
19			Test equipment: cal due date	
20			Remarks (note discrepancies)	
21			Test data	
22			Indication of pass/fail	
	Added items	Specific to test		
1	Insertion loss		Compliance with Measurement 2101	
2	Change in optical transmittance		Compliance with Measurement 2102	
3	Optical crosstalk		Compliance with Measurement 2103	
4	Optical signal discontinuity		Compliance with Measurement 2104	
5	Optical return loss		Compliance with Measurement 2105	
6	Attenuation rate		Compliance with Measurement 2106	

MEASUREMENT 2201.1

APPENDIX B

B.3 Notes.

B.3.1 Intended use.

B.3.1.1 Audit team. This checklist is intended to assist Government auditors or their representatives during inspections of the optical measurement system. This checklist may be augmented at the auditor's discretion; however, it is not to be reduced.

B.3.1.2 Test laboratories. When test laboratories prepare to perform optical measurements or audits, this checklist should be used to supplement Measurement Support Process 2201, not replace it.

MEASUREMENT SUPPORT PROCESS 2202.2

OPTICAL TEST INSTRUMENTATION

1. Purpose. This support process supplements the measurements in this Standard Practice by specifying the minimum requirements for optical test instrumentation. Specifically, this optical test instrumentation supports insertion loss and change in optical transmittance and with modifications, as specified in the applicable measurement, optical crosstalk, optical signal discontinuity and optical return loss. Measurement Support Process 2202 is intended to standardize on the minimum requirements for the optical test instrumentation in this measurement, which is one of the support processes for the other measurements in this Standard Practice. To ensure that the risk to the Government of accepting bad measurement data is small, to minimize test variations and to permit more accurate comparison of test results from multiple sources, a prescription approach is specified for requiring the optical test instrumentation meet specific criteria for the specified parameters.

1.1 Measurement 2202 with revision designator. See 1.3 and 1.4 in Part 2 of this Standard Practice (material in beginning of Part 2) to identify the Measurement number from the revision designator and method to reference this Measurement in other documents.

2. APPLICABLE DOCUMENTS

2.1 General. The documents listed in this section are specified in sections 3, 4, and 5 of this standard practice. This section does not include documents cited in other sections of this standard practice or recommended for additional information or as examples. While every effort has been made to ensure the completeness of this list, document users are cautioned that they must meet all specified requirements of documents cited in sections 3, 4, and 5 of this standard practice, whether or not they are listed.

2.2 Government documents.

2.2.1 Specifications, standards, and handbooks. The following specifications, standards, and handbooks form a part of this document to the extent specified herein. Unless otherwise specified, the issues of these documents are those cited in the solicitation or contract.

DEPARTMENT OF DEFENSE STANDARD

MIL-STD-2052 - Fiber Optic Systems Design.

(Copies of these documents are available online at https://quicksearch.dla.mil.)

2.3 Non-Government publications. The following documents form a part of this document to the extent specified herein. Unless otherwise specified, the issues of these documents are those cited in the solicitation or contract.

TELECOMMUNICATIONS INDUSTRY ASSOCIATION

TIA-526.14 - Optical Power Loss Measurements of Installed Multimode Cable Plant.

(Copies are available online at http://www.tiaonline.org/standards/catalog/index.cfm or from TIA, 2500 Wilson Boulevard, Suite 300, Arlington, VA 22201, USA, ATTN: Standards Department.)

2.4 Order of precedence. Unless otherwise noted herein or in the contract, in the event of a conflict between the text of this document and the references cited herein, the text of this document takes precedence. Nothing in this document, however, supersedes applicable laws and regulations unless a specific exemption has been obtained.

3. Definitions.

3.1 Optical source (fiber optic light source). A device that emits radiation in or near the visible region of the electromagnetic spectrum, for example, light-emitting diodes (LED), laser diodes (LD), and lamps (broad spectrum), for providing optical power to optical measurement system/instrumentation.

3.2 Power meter (fiber optic detector or photo-detector). An optoelectronic device that accepts optical signals from an optical source through the propagation medium (including fiber optic cabling and the DUT), detects them by converting them into electronic signals (through a light-sensitive element, such as a photodiode), amplifies, and further processes the electrical signal into units of measure of optical power in either dB or Watts (such as nano-Watts or micro-Watts).

4. Measurement criteria. Minimum requirements for test instrumentation are those specified in 4.1 through 4.9 with the further details specified in 5 herein and individual measurements in this Standard Practice.

4.1 Source and detection instrumentation. Optical sources shall be used to generate the optical signal and an optical power meter shall be used to detect the optical power transmitted through the test sample.

4.2 Fiber size for laser (LD) source launch. Unless otherwise specified, the output power from a specified laser diode (LD) source is that launched from a source, into a 9/125 µm fiber (such as the Corning SMF-28) then into a power meter.

4.3 Fiber size for LED source launch. Unless otherwise specified, the specified output power from a LED source is that launched from a source, into a 62.5/125 µm fiber (graded index) then into a power meter.

4.4 Minimum dynamic range.

4.4.1 Parameter specified for instrumentation. Dynamic range is the difference between the output power from an optical source (laser or LED) to the sensitivity of the detector (power meter optical noise floor).

4.4.2 Impact on related reduced instrument requirements. A reduced laser source output power and a reduced noise floor limit will decrease the dynamic range. The acceptable level of the signal would then be reduced at both source and receiver. The Government concern is that these reductions will lead to increased noise for change in optical transmittance, increasing ambiguity in test results.

4.4.3 Allowed reduction. A reduction in the dynamic range will be considered if it is demonstrated that at least 20 dB of signal to noise remains after accounting for all optical losses through the optical system (including switches, test jumpers, mode conditioners and DUT).

4.4.4 Limits based on other parameters specified. The requirements for optical source output power and power meter noise floor result in an implied dynamic range of 50 dB for single mode systems (with laser sources), 40 dB for multimode systems (with LED sources).

4.5 LED source. LED Source for use with 62.5/125 and 50/125 micron fiber sizes.

4.5.1 Wavelength:

4.5.1.1 Wavelength range for 850 nm: 850 ± 20 nm.

4.5.1.2 Wavelength range for 1,300 nm: 1300 ± 20 nm.

4.5.2 Power output: -20 dBm minimum for multimode.

4.5.3 Spectral width: 170 nm maximum.

4.5.4 Optical power stability: ≤ 0.1 dB/hr.

4.5.5 Coupled Power Ratio (CPR).

4.5.5.1 Requirement for 850 nm wavelength: Range of 24 to 29.5 dB.

4.5.5.2 Requirement for 1,300 nm wavelength: Range of 20.5 to 22.5 dB.

4.5.5.3 Test procedure: MIL-STD-2052, appendix A with conditions/apparatus in accordance with TIA526.14, Annex A.

4.5.6 Mechanical stability of connector interface/port.

4.5.6.1 Requirement: Repeated matings with the same unit (using units with both ST and FC interfaces) shall result in a measured change in the optical launch power of ≤ 0.1 dB between any two of the matings.

4.6 LED source. LED Source for use with 100/140, 62.5/125 and 50/125 micron fiber sizes, aircraft applications.

4.6.1 Wavelength: 850 ± 20 nm.

4.6.2 Power output: -20 dBm minimum for multimode.

4.6.3 Spectral width: 170 nm maximum.

4.6.4 Optical power stability: ≤ 0.1 dB/hr.

4.6.5 Mechanical stability of connector interface/port.

4.6.5.1 Requirement. Repeated matings with the same unit (using units with both ST and FC interfaces) shall result in a measured change in the optical launch power of ≤ 0.1 dB between any two of the matings.

4.6.6 Launch condition for the 100/140 micron fiber size: Launch condition shall meet 100/140 restricted launch (see Measurement Support Process 2203) .

4.7 LD (laser diode) source.

4.7.1 Wavelength: 1,310 +20/-30 nm for single mode.

4.7.2 Power output: -10 dBm minimum.

4.7.3 Spectral width: 5 nm maximum.

4.7.4 Optical power stability: ≤ 0.1 dB/hr.

4.7.5 Mechanical stability of connector interface/port.

4.7.5.1 Requirement: Repeated matings with the same unit (using units with both ST and FC interfaces) shall result in a measured change in the optical launch power of ≤ 0.1 dB between any two of the matings.

4.8 LD (laser diode) source.

4.8.1 Wavelength: 1,550 +20/-30 nm for single mode fiber sizes for aircraft applications.

4.8.2 Power output: -10 dBm minimum.

4.8.3 Spectral width: 5 nm maximum.
4.8.4 Optical power stability: ≤ 0.1 dB/hr.

4.8.5 Mechanical stability of connector interface/port.

4.8.5.1 Requirement: Repeated matings with the same unit (using units with both ST and FC interfaces) shall result in a measured change in the optical launch power of ≤ 0.1 dB between any two of the matings.

4.9 Power meter (including one with an integrating sphere and detector).

4.9.1 Optical noise floor: - 60 dB minimum.

4.9.2 Resolution: 0.01 dB minimum.

4.9.3 Accuracy: ± 0.25 dB maximum.

4.9.3.1 Units of measure for accuracy. A percent accuracy equates to a dB conversion as follows, using ± 5 percent accuracy as an example. Think of the 5 percent as the whole number 100 ± 5 percent = 0.95 to 1.05.

Take 10 log 0.95 = -0.22 dB.
Take 10 log 1.05 = +0.21 dB.
Therefore, specify the accuracy as ± 0.22 dB.

4.9.4 Linearity: ≤ 5 percent or ≤ 0.22 dB over the range of optical power from - 60 dBm to 3 dBm.

4.9.5 Detector size.

4.9.5.1 Power meter. Sufficient active area and placed sufficiently close to the end of the fiber to detect all the radiation emitted from it.

4.9.5.2 Power meter with integrating sphere detector. Sufficient active area, baffled to prevent direct exposure of incident radiation and positioned appropriately to detect attenuated, diffused radiation emitted from each fiber in the array or multiple fiber ferrule. Power meter measurement is compensated for attenuation of the integrating sphere with integrating sphere and detector calibrated as one unit (if performed separate from the power meter).

Example: Attenuation of a typical integrating sphere detector may be 30 dB. While this integrating sphere detector is rated for a maximum power of 40 dBm, the maximum power input to the photodetector could be in the range of 6 to 8 dBm. Calibration for accuracy may be performed in two stages. For instance, the first at 30 dB attenuation, then set the attenuator so that power meter displays 10.00 mW.

4.9.6 Detector stability: ≤ 0.1 dB/hr.

4.9.7 Measurement repeatability: Less than 3 percent variation.

4.9.8 Ambient light susceptibility (recommended). Effects of ambient light into the detector need to be controlled.

5. Verifications required.

5.1 Verify conformance to requirements for optical light sources and power meter parameters.

5.2 Verify optical transmittance instrumentation stability. Two stability tests shall be performed on the optical test instrumentation used to monitor the change in optical transmittance. The first test shall consist of measuring the transmitted power through each channel once every minute for a four hour period. The second test shall consist of measuring the transmitted power through each channel once every 30 minutes for a 96 hour period. The data for each channel shall be analyzed to determine average transmittance, minimum and maximum transmittance, the standard deviation of the transmittance, and the minimum and maximum percent deviation of the transmittance. Stability is acceptable if the observed change is less than one tenth of the optical performance requirement.

5.3 Verify detector surface area is sufficient.

5.3.1 Intent. Ensure that the entire cone of light from the ferrule end face strikes the active area of the detector. Provide an analysis to show that the distance from the connector ferrule end face to the detector surface is sufficient to provide complete light coverage over the active area of the selected detector without missing any higher order modes.

5.3.2 Sample calculation. See figure 2202-1 and sample calculations.

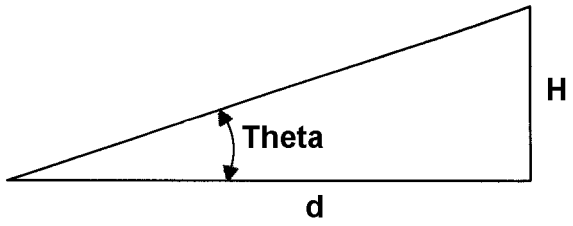

FIGURE 2202-1. Sides and angle shown for trigonometric tangent designations.

Given: NA = 0.275 and distance d between the ferrule end face and detector surface = 1.825 mm (.072 inch).

Calculations: Theta = ARCSIN NA = ARCSIN .275 = .279 tan Theta = H/d;
H = d tan Theta = 1.825 mm x 0.286 = .523 mm.

Result: Need a detector with an active surface diameter of at least 0.523 x 2 = 1.05 mm (.041 inch).

5.4 Verify Coupled Power Ratio (CPR). Verify Coupled Power Ratio (CPR) for multimode optical sources with tests using 62.5/125 micron fiber.

5.4.1 Test equipment. Optical power meter, optical source, one 62.5/125 micron multimode jumper cable with near nominal core size and NA, one single mode jumper cable (single mode at the source wavelength) and near nominal mode field diameter, one cable jumper-to-cable jumper adapter (such as an ST-to-ST adapter). The jumper cables should be sufficiently long (at least 1 meter) that all launch cladding mode power is completely attenuated.

5.4.2 Test setup. Allow sufficient warm up time for the optical source and power meter. Clean the optical connectors on the ends of the cable jumpers and the optical connector interface ports at the optical source and power meter.

5.4.3 CPR measurement.

5.4.3.1 Connect one end of the multimode jumper cable to the optical source and the other end to the power meter.

5.4.3.2 Observe the power meter display. When the value in the display is sufficiently stable, record the value (P_{MM}) in dBm.

5.4.3.3 Verify that power meter displayed value does not fluctuate by more than 0.4 dB (peak-to-peak). If the power meter value fluctuates more than 0.4 dB (peak-to-peak), a reading should not be taken. Either the optical source is not sufficiently stable or the optical power level is too low for the optical power meter.

5.4.3.4 Disconnect the multimode jumper cable from the power meter and place a ST-to-ST adapter (or the appropriate adapter) onto that end of the multimode jumper cable.

5.4.3.5 Select the appropriate single mode jumper cable with respect to the optical source output wavelength.

5.4.3.6 Connect one end of the single mode jumper cable to the adapter (on the output end of the multimode jumper cable).

5.4.3.7 Connect the other end of the single mode jumper cable to the power meter.

5.4.3.8 Observe the power meter display. When the value in the display is sufficiently stable, record the value (P_{SM}) in dBm.

5.4.3.9 Verify that the power meter displayed value does not fluctuate by more than 0.4 dB (peak-to-peak). If the power meter value fluctuates more than 0.4 dB (peak-to-peak), a reading should not be taken. Either the optical source is not sufficiently stable or the optical power level is too low for the optical power meter.

5.4.3.10 Disconnect the single mode and multimode jumper cable and clean the connectors and the cable ends.

5.4.3.11 Repeat steps a through h until five stable readings have been recorded both with and without the single mode jumper cable.

5.4.4 CPR calculations.

5.4.4.1 For each repetition of steps 5.4.3.1 through 5.4.3.9, calculate the logarithmic ratio of the optical power coupled into the multimode optical fiber (P_{MM}) to the optical power coupled into the combined single mode and multimode optical fibers (P_{SM}) using the equation:

$$R_S = P_{MM} - P_{SM}.$$

5.4.4.2 Calculate the average of the five values for R_S to obtain the CPR.

MEASUREMENT SUPPORT PROCESS 2202.2

APPENDIX A

MINIMUM ESSENTIAL CHECKLIST FOR OPTICAL TEST INSTRUMENTATION PARAMETERS

A.1 Purpose. This appendix addresses a checklist of the minimum essentials for test instrumentation used to obtain optical measurements. This appendix for launch conditions will apply only for test samples with single mode cable.

A.2 Usage. Table 2202 A-I is the checklist of minimum essentials for Government auditors, or their representatives, use during inspections. This checklist should be expanded at the auditor's discretion.

TABLE 2202 A-I. Minimum essential checklist for optical test instrumentation parameters.

Item	Category	Description	Requirement	Compliance
	Test equipment	Pertains to items 1 to 5		
1	LED optical source	LED (Light Emitting Diode) type	Compliance with Measurement Support Process 2203	
		Wavelength		
		If 850 nm, aircraft	Wavelength range: 850 ± 20 nm	
			Meets 100/140 restricted launch (see Measurement Support Process 2203) for 100/140 um fiber size	
		If 850 nm	Wavelength range: 850 ± 20 nm	
			CPR range: 24 to 29.5 dB, verify in accordance with 5.4 of Measurement Support Process 2202	
		If 1300 nm	Wavelength range: 1,300 ± 20 nm	
			CPR range: 20.5 to 22.5 dB, verify in accordance with 5.4 of Measurement Support Process 2202	
		Power output	-20 dBm minimum for multimode	
		Spectral width	170 nm maximum	
		Optical power stability	≤ 0.1 dB/hr.	
		Mechanical stability of connector interface/port	≤ 0.1 dB between any two of the matings	
2	LD optical source	LD (Laser Diode) type	Compliance with Measurement Support Process 2203	
		Wavelength		
		If 1550 nm	Wavelength range: 1,550 +20/-30 nm	
		If 1310 nm	Wavelength range: 1,310 +20/-30 nm	
		Power output	-10 dBm minimum	
		Spectral width	5 nm maximum	
		Optical power stability	≤ 0.1 dB/hr.	
		Mechanical stability of connector interface/port	≤ 0.1 dB between any two of the matings	

MEASUREMENT 2202.2

APPENDIX A

TABLE 2202 A-I. Minimum essential checklist for optical test instrumentation parameters - Continued.

Item	Category	Description	Requirement	Compliance
3	Power meter	Optical noise floor	- 60 dB minimum	
		Resolution	0.01 dB minimum	
		Accuracy	± 0.25 dB minimum	
		Linearity: over the range of optical power from - 60 dBm to 3 dBm.	≤ 5 percent or ≤ 0.22 dB (see Measurement Support Process 2202 for conversion)	
		Detector size per trigonometric analysis (see detector verification test in 5.3 of Measurement Support Process 2202)	sufficient active area and placed sufficiently close to the end of the fiber to detect all the radiation emitted from it (captures light – both spatial and angular)	
		Detector stability	≤ 0.1 dB/hr.	
		Measurement repeatability	Less than 3 percent variation	
		Ambient light susceptibility (recommended)	Detector unit sealed to extent that not exposed to ambient light (ports covered completely)	
4	Verify acceptable optical measurement system stability (5.2 of Measurement Support Process 2202)	Each channel measured once every minute for 4 hours	Determine average, min, max, std dev, max percent dev, min percent dev	
			< 0.1 of optical performance requirement	
		Each channel measured every 30 minutes for 96 hours	Determine average, min, max, std dev, max percent dev, min percent dev	
			< 0.1 of optical performance requirement	
5	Switching system	Only specified/allowed for Measurement 2102	Compliance with Measurement 2102	

A.3 Notes.

A.3.1 Intended use.

A.3.1.1 Audit team. This checklist is intended to assist Government auditors or their representatives during inspections of the optical measurement system. This checklist may be augmented at the auditor's discretion; however, it is not to be reduced.

A.3.1.2 Test laboratories. When test laboratories prepare to perform optical measurements or audits, this checklist should be used to supplement Measurement Support Process 2202, not replace it.

MEASUREMENT SUPPORT PROCESS 2203.2

LAUNCH CONDITIONS

1. Purpose. This support process supplements the measurements in this Standard Practice by specifying the requirements for test for controlling the launch condition. For single mode, the light must be launched only into the fundamental mode. The process to accomplish this is standardized by use of a mode filter on the optical fiber. For multimode, the power distribution among modes is controlled. The process to accomplish this is standardized by specifying requirements for the optical source and by use of launch jumpers. Measurement Support Process 2203 is intended to standardize on the means or process to accomplish the required launch condition, which is one of the support processes for the other measurements in this Standard Practice. To ensure that the risk to the Government of accepting bad measurement data is small, to minimize test variations, and to permit more accurate comparison of test results from multiple sources, a prescription approach is specified for requiring the means or process to accomplish the required launch condition.

1.1 Measurement 2203 with revision designator. See 1.3 and 1.4 in Part 2 of this Standard Practice (material in beginning of Part 2) to identify the Measurement number from the revision designator and method to reference this Measurement in other documents.

2. APPLICABLE DOCUMENTS

2.1 General. The documents listed in this section are specified in sections 3, 4, and 5 of this standard practice. This section does not include documents cited in other sections of this standard practice or recommended for additional information or as examples. While every effort has been made to ensure the completeness of this list, document users are cautioned that they must meet all specified requirements of documents cited in sections 3, 4, and 5 of this standard practice, whether or not they are listed.

2.2 Non-Government publications. The following documents form a part of this document to the extent specified herein. Unless otherwise specified, the issues of these documents are those cited in the solicitation or contract.

TELECOMMUNICATIONS INDUSTRY ASSOCIATION

TIA-526.14	-	Fiber Optic Power Loss Measurements of Installed Multimode Cable Plant.
TIA-455.34	-	Interconnection Device Insertion Loss Test.
TIA-455.177	-	Measurement Methods and Test Procedures – Numerical Attenuation.
TIA-455-176-A	-	Fiber Optic Cross-sectional Geometry by Grey-scale Analysis, Method for Measuring.

(Copies are available online at http://www.tiaonline.org/standards/catalog/index.cfm or from TIA, 2500 Wilson Boulevard, Suite 300, Arlington, VA 22201, USA, ATTN: Standards Department.)

2.3 Order of precedence. Unless otherwise noted herein or in the contract, in the event of a conflict between the text of this document and the references cited herein, the text of this document takes precedence. Nothing in this document, however, supersedes applicable laws and regulations unless a specific exemption has been obtained.

3. Definitions.

3.1 Launch angular distribution. The angular extent (range for the angles) of the light from the optical source incident on the optical fiber end face.

3.2 Launch condition. A parameter that describes the geometric relationships of the light entering or exiting a given point or surface (such as exit angle, launch angle, wavelength, refractive-index contrast, launch numerical aperture, launch loss, or spectral width). For single mode, the light must be launched only into the fundamental mode. For multimode, the power distribution among modes is controlled.

3.3 Launch spot size. The area of the optical fiber end face that is illuminated by the light from the optical source.

3.4 Mode filter. A device used to attenuate specific modes propagating in the core of an optical fiber. A free form loop and mandrel wraps are two examples of mode filters used. Alternatively, a specified length of optical fiber in which the coating acts as a cladding mode stripper may be used.

3.5 Mode filter, single mode. A device used to eliminate the second-order and higher modes from propagating along the optical fiber.

3.6 Mode filter, multimode. A device used to remove higher order modes from the optical fiber.

3.7 Overfilled launch condition. This launch condition occurs in multimode fiber when the launch spot size and angular distribution are larger than that of the core diameter. Incident light is lost that falls both outside of the optical fiber core and at incident angles greater than the angle of acceptance. Overfilling the optical fiber excites both low-order and high-order modes.

3.8 Restricted (underfilled) launch condition. This launch condition occurs in multimode fiber when the launch spot size and angular distribution are smaller than that of the core diameter. Incident light is lost that falls both outside of the optical fiber core and at incident angles greater than the angle of acceptance. Underfilling the optical fiber excites mainly the low-order modes. This results in concentrating most of the optical power in the center of the optical fiber.

4. Setup. Minimum requirements for implementing the launch conditions specified for the prescription approach are those specified in 4.1 through 4.4 with the further details, such as for optical source requirements, specified in individual measurements in this Standard Practice.

4.1 Single mode launch condition. The prescription launch condition shall be accomplished by use of a mandrel wrap with number of turns and mandrel diameter for each fiber size as specified in table 2203-1. When cabling length is unspecified or less than 3 meters between the optical source and test sample, a 2 meter minimum length of fiber shall exist between the optical source and the test sample. Each channel in which a measurement is obtained shall have a mode filter (mandrel wrap) at the source end. When a source end switch is included as part of the measurement system, a mode filter (mandrel wrap) shall be placed after each output port of the source end switch in which a measurement is obtained.

TABLE 2203-1. Mandrel wrap parameters for single mode optical fiber.

Fiber size (microns)	Coil diameter 3/ mm (inch)	Number of turns
5.8/125 1/	60 (2.36)	1
7.5/125 2/	60 (2.36)	1
9/125	30 (1.18)	3

1/ This optical fiber has a specified mode field diameter of 5.8 microns at the 1,550 nm wavelength. The equivalent mode field diameter at 1,310 nm wavelength is 5.1 microns.
2/ Likewise, the optical fiber has a specified mode field diameter of 7.5 microns at the 1,550 nm wavelength.
3/ See 4.3.1 to select the mandrel diameter for obtaining "coil diameter" specified in column 2 of this table.

4.2 Multimode restricted launch condition. The prescription launch condition shall be accomplished by use of the specified launch jumper for the 50/125 micron and 62.5/125 micron fiber sizes as specified in 4.2.1 and 4.2.2. The prescription launch condition for the 100/140 micron fiber size shall be accomplished as specified in 4.2.3. This prescription approach shall apply for measurements that specify a restricted launch condition in lieu of an overfilled launch condition. Each channel in which a measurement is obtained shall have a mode filter (launch jumper or mandrel wrap, as specified) at the source end. When a source end switch is included as part of the measurement system, a mode filter (launch jumper or mandrel wrap, as specified) shall be placed after each output port of the source end switch in which a measurement is obtained.

MEASUREMENT 2203.2

4.2.1 Fiber size: 50/125 micron. A 2 meter length of OFS optical fiber BF06819 or OFS fiber optic cable C16133 shall be used as the launch condition cable. Policy for Government provisioning of launch conditioning cable is addressed in 6.1.

4.2.2 Fiber size: 62.5/125 micron. For 62.5/125 micron optical fiber, use a 2 meter minimum length of 50/125 micron optical fiber with a 0.2 NA.

4.2.3 Fiber size: 100/140 micron. The restricted launch condition specified in 4.2.4 shall be used as the means to provide a restricted launch for the 100/140 micron fiber size and shall be referred to herein as the 100/140 restricted launch condition. Until the Government provides details on standard method to implement this launch condition (which will occur at a later date), the setup used shall be the one specified in 4.2.3.1 through 4.2.3.3.

4.2.3.1 Optical source. The launch condition into a 100/140 micron optical fiber exiting the optical source shall conform to 4.2.4.

4.2.3.2 Mode filter. When a switching system is used in conjunction with the optical source, a mode filter shall be used at the exit ports of the source end switch for each channel being monitored. The mode filer shall consist of 5 complete turns around a 25 mm (.98 inch) mandrel.

4.2.3.3 Mandrel wrapping operations. The process specified in 4.3 shall be used to select mandrel size and perform technique of mandrel wrapping.

4.2.4 100/140 restricted launch condition. The restricted launch condition at the optical source shall conform to table 2203-2.

TABLE 2203-2. 100/140 restricted launch tolerances. 1/, 2/

Pattern type	Intensity level (from peak value)	Minimum tolerance	Maximum tolerance	Measurement procedure
Far field 3/	5 percent 15 percent 75 percent	0.245 0.210 0.100	0.255 0.225 0.120	TIA-455.177
Near field 4/	5 percent 15 percent 75 percent	80 70 30	95 85 45	TIA-455-176-A

1/ This is a restricted launch condition for the 100/140 micron fiber size with a NA of 0.29
2/ 100/140 launch condition may be referred to in some industry documentation as ASA-100 launch condition or as the M80 launch condition.
3/ Far field skewing requirement for 100/140 restricted launch condition. The difference in the angle at the 5 percent points is not to exceed 3° when the far field intensity scan is performed in two, 90° radial orientations of the optical fiber.
4/ Near field core eccentricity requirement for 100/140 restricted launch condition. The difference in the diameter at the 5 percent points is not to exceed 3 microns when the near field intensity scan is performed in two, 90° radial orientations of the optical fiber.

4.3 Mandrel wrapping operations.

4.3.1 Mandrel diameter selection. The diameter of the mandrel selected shall account for the outer diameter of the cable. Process for mandrel diameter selection (determination) shall be the one as provided by example in 4.3.1.1.

4.3.1.1 Example of process for mandrel diameter selection (determination). For example, a 62.5/125 micron fiber is in a 2 mm (.08 inch) diameter cable. The "coil diameter" for the 62.5/125 micron fiber size is specified as 20 mm (.78 inch). The mandrel diameter selected shall be 18 mm (.71 inch) . This mandrel diameter is obtained by subtracting the diameter of the outer cable jacket from the specified 20 mm (.78 inch) "coil diameter". Winding this 2 mm (.07 inch) cable around the 18 mm (.71 inch) diameter mandrel will result in the fiber being in a 20 mm (.78 inch) coil.

4.3.2 Mandrel wrapping process. The technique of wrapping the fiber around a mandrel shall be performed as specified (see 3.5 of TIA-455.34). Mandrel wrap each cable with the specified number of closely wound turns around the mandrel, with no crossovers, while applying a minimal amount of tension.

4.4 Multimode overfilled launch condition. The overfilled launch condition shall be achieved only through the optical source.

4.4.1 Fiber sizes 50/125 micron and 62.5/125 micron. Acceptable overfilled launch shall be determined only through launch spot diameter and numerical aperture, measured by far field/near field distributions or through the coupled power ration (CPR), as specified in 4.4.1.1 and 4.4.1.2.

4.4.1.1 Far field/near field distributions. An overfilled launch condition shall be defined as one producing a nominal launch spot of diameter greater than or equal to the nominal core diameter of the test fiber and a nominal launch condition numerical aperture (NA) greater than or equal to the nominal NA. Due to measurement precision, a tolerance of ±5 percent may be applied to this definition. NA shall be calculated from the far field distribution as performed in accordance with TIA-455.177. Spot size shall be calculated from the near field distribution as performed in accordance with TIA-455-176-A.

4.4.1.2 Coupled Power Ratio (CPR). Annex A of TIA526.14 specifies the CPR limits for overfilled launch conditions (category 1) of multimode fibers. The CPR shall be measured for the multimode, 62.5/125 fiber size launch conditions at 1300 nm wavelength. For purposes of performing a CPR measurement for optical source acceptability, an acceptable overfilled launch condition shall be one within the range with a CPR from 20.5 to 22.5 as performed in accordance with 5.4 of Measurement Support Process 2202. When specified at the 850 nm wavelength, the CPR shall be measured for the multimode, 62.5/125 fiber size launch conditions with an acceptance criteria of a CPR from 24 to 29.5.

4.4.2 Fiber size 100/140 micron. Measurements for this fiber size are performed only with a restricted launch condition.

4.5 Bend insensitive single mode fiber. A bend insensitive cable shall not be used for the launch cable.

4.6 Bend insensitive multimode fiber. A mandrel shall not be used. A bend insensitive cable shall not be used for the launch cable. For 50/125 micron fiber, the launch jumper specified in 4.2.1 shall be used. For 62.5/125 micron fiber, the launch jumper specified in 4.2.2 shall be used.

5. Verification.

5.1 Verify mandrel wrap integrity. Verify that the mandrel wrap remains intact before and after testing. Also, mandrel wrap shall be inspected for integrity during testing if a failure occurs.

5.1.1 Loss of mandrel wrap. If the mandrel wrap becomes undone during testing, a determination shall be made if the data is valid. If there is no difference in the optical power, with a new mandrel wrap and with the undone mandrel wrap, then the test data is valid. If the change in optical transmittance is less than 0.1 dB, there is no concern. If the change in optical transmittance approaches 0.5 dB, then a determination cannot be made if the test sample passes, fails, or is borderline. The test shall be redone with a mandrel wrap properly wrapped.

5.2 Verify cabling distance. When mandrel wrapping is specified, verify that there is a 2 meter minimum length of fiber between the optical source and the test sample.

5.3 Verify correct launch jumper. When a launch jumper is specified, verify correct fiber size of the launch jumper.

5.4 Verify no disconnects. Verify that the light launch conditions at the optical source end are maintained throughout the test (there shall be no disconnections permitted) for all measurements taken with that fiber as the active channel.

5.5 Verify correct optical source is used.

5.5.1 Single mode. Verify that a mandrel is used in conjunction with a Fabry Perot type laser source.

5.5.1.1 Verify that the fiber pigtail on the optical source is of the same fiber size or larger than the fiber size for the test sample being tested. See 6.2.2.

5.5.2 Multimode.

5.5.2 1 Verify restricted launch, multimode. Verify that when a launch jumper is used, its use is in conjunction with an LED optical source. This optical source shall provide an overfilled launch condition for the fiber size being tested.

5.5.2 2 Verify overfilled launch, multimode. Vendor certification (using CPR or Near Field/Far Field power distributions) or measurements done to obtain CPR or Near Field/Far Field power distributions shall be required to show compliance.

5.6 Verify correct detection end instrumentation and cabling is used.

5.6.1 Single mode. For the smaller core fiber sizes, no detector end switch, switch-to-detector jumper or detector with a larger core fiber pigtail shall be used unless compliance, as specified in 6.2.2, is verified.

5.7 Verify placement of a mode filter at source end. This verification is applicable for single mode measurements and for multimode measurements in which a restricted launch condition is specified.

5.7.1 Measurement systems with a source end switch. Verify that the specified mode filter is placed at the output ports of the source end switch when a source end switch is included as part of the measurement system.

5.7.2 Measurement systems without a source end switch. Verify that the specified mode filter is placed at the source end of each channel in which a measurement is obtained.

6. Notes.

6.1 Policy for Government provisioning of 50/125 micron launch conditioning cable.

6.1.1 Eligible parties. The Government, at their discretion, may provide the test laboratory or vendor doing the testing (the recipient) with one 70 meter spool of the required launch condition cable (sufficient length of OFS C16133 fiber optic cable to terminate connectors on the ends of 32 two meter lengths of launch conditioning jumpers). Only recipients doing the testing are to receive cable. Only one provision (70 meter spool) of cable will be provided even if the recipient is testing multiple vendors.

6.1.2 Allowed use. Sole use of cable provisioned will be for QPL (Qualified Products List) testing. Cable provisioned will not be used to fabricate MQJ (Measurement Quality Jumper) cables or other type cables.

6.1.3 Recipient responsibilities. The recipient will make the connector terminations and retain the terminated cable for future use. Recipients that do not complete the QPL process will return the cable. Unused lengths will be returned to the Government. The recipient will bear shipping costs.

6.1.4 Method to request launch condition cable. Requests for launch condition cable will be made to DLA Land and Maritime-VQP Qualifications Group. Requests are to be submitted via e-mail and include the following information: Recipient (company) name, shipping address, point of contact with telephone number and e-mail address, DLA Land and Maritime test report number located on Form 19P, recipient's express mail shipping company, recipient's account number for the express mail shipping company. Current DLA Land and Maritime-VQP point of contact can be obtained at Web Site: https://www.landandmaritime.dla.mil/Programs/QmlQpl/. To obtain current technical contact, select Programs/Contacts followed by selecting on Passive Devices Team.

6.2 Intended use.

6.2.1 Launch into smaller fiber sizes, single mode. An optical source with a standard 9/125-micron fiber pigtail may be used to launch light into an optical fiber with a smaller single mode core size. This will incur a loss, but the single mode should reestablish itself in the smaller mode field diameter fiber.

6.2.2 Detection from smaller fiber sizes, single mode. It should be noted that care needs to be taken on the output end to ensure that all of the light exiting the test sample be captured by the detection system. The numerical aperture of some small mode field diameter fiber designs may be larger than the acceptance angle of the detection system or that of standard multimode fiber that might be used as pigtails on the detector. Light from a single mode fiber with a smaller mode field diameter cannot be transmitted to the detector through single mode fiber with a larger mode field diameter. From the smaller core fiber, no detector end switch, switch-to-detector jumper or detector with a larger core fiber pigtail can be used. The preference is to not do the mismatch on the detection end. Alternately, it is possible for development of a system that performs accurate measurements with a mismatch present, but this requires careful implementation and characterization before test results are considered acceptable.

6.3 Selection of launch jumper criteria, multimode 50/125 micron fiber size. A restricted launch condition will be standardized using a 42/125 micron, stepped index fiber (such as uniformly doped core with a pure silica cladding and acrylate coating). The selection of the parameters for this fiber was an engineering choice that produces results that are more conservative than that of a 70/70 restricted launch condition. The nominal value of the 42-micron core diameter was obtained by taking 70 percent of the core diameter for a 62.5/125 micron fiber. The nominal value for the numerical aperture was obtained by taking 70 percent of 0.20, the numerical aperture for the 50/125-micron fiber. The numerical aperture is measured at the 50 percent intensity levels as is typical for a SI (stepped index) fiber versus at the 5 percent intensity levels for a GI (graded index) fiber. A tolerance of ± 5 percent is used for the core diameter and ± 8 percent for the numerical aperture. Compliance for this restricted launch condition is evaluated at the indicated percent of the peak intensity as shown in the table below for the 50/125-micron fiber size.

MEASUREMENT 2203.2

APPENDIX A

MINIMUM ESSENTIAL CHECKLIST FOR LAUNCH CONDITION, SINGLE MODE

A.1 Purpose. This appendix addresses a checklist of the minimum essentials to obtain the launch conditions specified for the prescription approach. This appendix for launch conditions will apply only for test samples with single mode cable.

A.2 Usage. Table 2203 A-I is the checklist of minimum essentials for Government auditors, or their representatives, use during inspections. This checklist should be expanded at the auditor's discretion.

TABLE 2203 A-I. Minimum essential checklist for launch condition, single mode.

Item	Category	Description	Requirement	Compliance
	Test equipment	Pertains to items 1 to 3		
1	Optical source	Configuration: LD = Laser Diode	Type: Fabry Perot	
		Fiber pigtail on optical source	Fiber pigtail is same size or larger as DUT fiber size	
2	Detection end instruments and cabling	For DUT fiber size with smaller mode field diameters with larger NA than detector end instruments and cabling	Preference: No fiber mismatch on detector end	
			Alternate: Characterize to verify all light is captured by detection system	
3	Source end switch	For measurements where a source end switch is used	Mode filter (mandrel wrap) is placed at each output port	
	No source end switch	For measurements where no intermediate items are permitted between source and DUT	Mode filter (mandrel wrap) is placed at the source end of each channel that a measurement is made.	
	Launch conditions	Pertains to items 4 to 6		
4	Mandrel Wrap integrity	Inspect before start of testing	Mandrel wrap remains intact	
		Inspect after testing or if failure occurs	Mandrel wrap remains intact	
5	Mandrel wrap for fiber size	5.8/125	60 mm (2.36 inch) mandrel at 1 wrap	
		7.5/125	60 mm (2.36 inch) mandrel at 1 wrap	
		9/125	30 mm (1.18 inch) mandrel at 3 wraps	
6	Cable length	Minimum length at launch end	2 m (.07 inch) length minimum	
7	Calculation	Correct coil diameter calculated in accordance with 4.3.1.1.	Verify correct mandrel size	

A.3 Notes.

A.3.1 Intended use.

A.3.1.1 Audit team. This checklist is intended to assist Government auditors or their representatives during inspections of the optical measurement system. This checklist may be augmented at the auditor's discretion; however, it is not to be reduced.

A.3.1.2 Test laboratories. When test laboratories prepare to perform optical measurements or audits, this checklist should be used to supplement Measurement Support Process 2203, not replace it.

MEASUREMENT 2203.2

APPENDIX B

MINIMUM ESSENTIAL CHECKLIST FOR LAUNCH CONDITION, MULTIMODE

B.1 Purpose. This appendix addresses a checklist of the minimum essentials to obtain the launch conditions specified for the prescription approach. This appendix for launch conditions will apply only for test samples with multimode cable.

B.2 Usage. Table 2203 B-I is the checklist of minimum essentials for Government auditors, or their representatives, use during inspections. This checklist should be expanded at the auditor's discretion.

TABLE 2203 B-I. Minimum essential checklist for launch condition, multimode.

Item	Category	Description	Requirement	Compliance
	Test equipment	Pertains to items 1 to 3		
1	Optical source	LED source, overfilled	Verify using CPR or Far Field/Near Field distribution	
		CPR at 1300 nm wavelength, 62.5/125 micron fiber size	CPR will be from 20.5 to 22.5 as performed in accordance with 5.4 of Measurement Support Process 2202.	
		CPR at 850 nm wavelength, 62.5/125 micron fiber size	CPR will be from 24 to 29.5 as performed in accordance with 5.4 of Measurement Support Process 2202.	
		Far Field/Near field distribution	Nominal launch spot of diameter >= nominal core diameter of the test fiber, and nominal launch condition NA >= the nominal NA	
		LED source for aircraft applications (restricted launch at the 100/140 um fiber size)	100/140 restricted launch optical source	
2	Detection End Instruments and cabling	For DUT fiber size with smaller mode field diameters with larger NA than detector end instruments and cabling	Preference: No fiber mismatch on detector end	
			Alternate: Characterize to verify all light is captured by detection system	
3	Source end switch	For measurements where a source end switch is used	Mode filter (launch jumper or mandrel wrap, as specified) is placed at each output port	
	No source end switch	For measurements where no intermediate items are permitted between source and DUT	Mode filter (launch jumper or mandrel wrap, as specified) is placed at the source end of each channel that a measurement is made.	
	Launch conditions	Pertains to items 4 to 7		
4	Mandrel wrap integrity	Inspect before start of testing	Mandrel wrap remains intact	
		Inspect after testing or if failure occurs	Mandrel wrap remains intact	

MEASUREMENT 2203.2

APPENDIX B

TABLE 2203 B-I. Minimum essential checklist for launch condition, multimode - Continued.

Item	Category	Description	Requirement	Compliance
5	Optical source used	Overfilled launch (initial 2101 only, 2103)		
		100/140	Not/Applicable (N/A), do 100/140 restricted launch only	
		62.5/125	Use source with 62.5/125 launch. CPR range: 20.5 to 22.5 or do Far Field/Near Field	
		50/125	Use source with 62.5/125 launch	
6	Mode filter	Restricted launch (initial and all subsequent 2101, 2103, 2104, 2105)	Use same optical source as with overfilled launch	
		100/140 with no switching system at source end	100/140 restricted launch optical source	
		100/140 with switching system at source end	100/140 restricted launch optical source with 25 mm (.98 inch) mandrel at 5 wraps	
		62.5/125	50/125 jumper	
		50/125	42.5/125 jumper	
7	Cable length	Minimum length at launch end	2 m (79 inches) length minimum	
8	Calculation	Correct coil diameter calculated in accordance with 4.3.1.1.	Verify correct mandrel size	

B.3 Notes.

B.3.1 Intended use.

B.3.1.1 Audit team. This checklist is intended to assist Government auditors or their representatives during inspections of the optical measurement system. This checklist may be augmented at the auditor's discretion; however, it is not to be reduced.

B.3.1.2 Test laboratories. When test laboratories prepare to perform optical measurements or audits, this checklist should be used to supplement Measurement Support Process 2203, not replace it.

MEASUREMENT 2204

RECTANGULAR BACKPLANE CONNECTOR ENGAGEMENT AND TEST FIXTURES

1. Purpose. This support process supplements the measurements in this Standard Practice by specifying the minimum connector engagement requirements for rectangular backplane connectors undergoing optical, mechanical and environmental testing. Specifically, this support process establishes test fixture guidance and standardization when obtaining optical measurements during testing. Optical measurements include those for insertion loss, change in optical transmittance, optical crosstalk, optical signal discontinuity and optical return loss. Measurement Support Process 2204 is intended to standardize on the minimum requirements for the test fixture standardization to ensure measurement consistency. To ensure that the risk to the Government of accepting bad measurement data is small, to minimize test variations and to permit more accurate comparison of test results from multiple sources, a prescription approach is specified for module engagement distances (minimum, maximum or both) and test fixture features.

1.1 Measurement 2204 with revision designator. See 1.3 and 1.4 in Part 2 of this Standard Practice (material in beginning of Part 2) to identify the Measurement number from the revision designator and method to reference this Measurement in other documents.

2. APPLICABLE DOCUMENTS.

2.1 General. The documents listed in this section are specified in sections 3, 4, and 5 of this standard practice. This section does not include documents cited in other sections of this standard practice or recommended for additional information or as examples. While every effort has been made to ensure the completeness of this list, document users are cautioned that they must meet all specified requirements of documents cited in sections 3, 4, and 5 of this standard practice, whether or not they are listed.

2.2 Non-Government publications. The following documents form a part of this document to the extent specified herein. Unless otherwise specified, the issues of these documents are cited in the solicitation or contract.

VMEbus International Trade Association (VITA)

ANSI/VITA 66.0 - Optical Interconnect on VPX – Base Standard

ANSI/VITA 66.1 - Optical Interconnect on VPX – MT Variant

(Copies are available from http://www.vita.com or the VMEbus International Trade Association, PO Box 19658 Fountain Hills, AZ 85269.)

2.3 Order of precedence. Unless otherwise noted herein or in the contract, in the event of a conflict between the text of this document and the references cited herein, the text of this document takes precedence. Nothing in this document, however, supersedes applicable laws and regulations unless a specific exemption has been obtained.

3. Definitions.

3.1 Backplane connector. Connector mounted on the backplane or motherboard and mates with a module connector.

3.2 Module connector. Connector mounted on a plug-in module and mates with a connector mounted on the backplane.

3.3 Plug-in module. A board containing electronic circuitry with interfacing connectors and also referred to as the Printed Wiring Board (PWB), Printed Circuit Board (PCB), circuit card or daughter card..

4. General requirements.

MEASUREMENT 2204

4.1 Module engagement (insertion) range. The module engagement is the distance between the rear surface of the module (PWB, PCB, see 3.3) and the backplane front surface. The backplane front surface is shown as datum A in figure 2204-1. The rear surface of the module is shown as datum B in figure 2204-1. When performing optical measurements and mating backplane and module connectors that conform to VITA 66.0 series of connectors for those with MT ferrules (such as VITA 66.1), the distances for module engagement to set for various optical, mechanical and environmental tests shall be the ones specified in table 2204-I. For other backplane and module connectors, the distances for module engagement shall conform to those specified in the applicable component or interface standard. The module engagement range adjustable on the test fixture shall exceed that of the rectangular backplane connectors under test.

TABLE 2204-I. Module engagement distances for various type tests.

Test Type Performed	Connector engagement 1/, 2/, 3/, 4/	Distance (inch)
Optical	Minimum, Maximum	.522, .482
Mating Durability	Maximum	.482
Mechanical Shock, Vibration	Minimum	.522
Environmental	Minimum	.522

1/ Minimum connector engagement = least spring force.
2/ Minimum connector engagement = maximum value of distance between the front of the backplane to the rear edge of the plug-in module.
3/ Maximum connector engagement = highest spring force.
4/ Maximum connector engagement = minimum value of distance between the front of the backplane to the rear edge of the plug-in module.

4.2 Features for test fixtures. Fixtures used to comply with this support process shall meet the intent of the features specified in 4.2.1 through 4.2.3.

4.2.1 Common adapter plate. The test fixture shall have a sufficiently small profile that allows the test fixture to be mounted to a common adapter plate. An example of an adapter plate is the master adapter plate used for shock and vibration fixtures and found in figure 3202-8 of MIL-STD-1678-3. The advantage of using an adapter plate is that the same module engagement test fixture will have a common mounting that can be affixed to a variety of different test fixtures (such as automated or manual repositioning devices/fixtures, vibration blocks, shock plates).

4.2.2 Features for optical test fixtures.

a. Mounting plate, backplane connector. The backplane connector shall be affixed to a mounting plate. The mounting plate shall allow for backplane connector repositioning in both the x-axis and the y-axis.
b. Mounting plate, module connector. The module connector shall be affixed to a mounting plate. The mounting plate shall allow for module connector repositioning in the z-axis (i.e., longitudinal axis or axis corresponding to the distance of module engagement).
c. Fixed and movable stages. The backplane connector shall be affixed to a stationary bracket on the test fixture so as to prevent movement in the z axis. The module connector shall be on a movable bracket on the test fixture so as to allow movement in the z axis.
d. Measurements. The test fixture design shall allow for the length measurement of module engagement and for a force measurement to measure the spring force at specified values of module engagement. The range of test fixture travel in the z-axis shall be greater than the specified range for module engagement. The range of the instrument used to measure the spring force at the specified module engagement shall be beyond the range for the spring compression force.
e. Common adapter plate. Both the backplane connector and the module connector shall be mounted to adapter plates. The adapter plates shall be affixed to the test fixture.
f. Material. Test fixture material (including mounting plates) shall be metal, not circuit boards.

4.2.3 Concept sketch for an optical test fixture. The test fixture shall include those features shown in figure 2204-1.

MEASUREMENT 2204

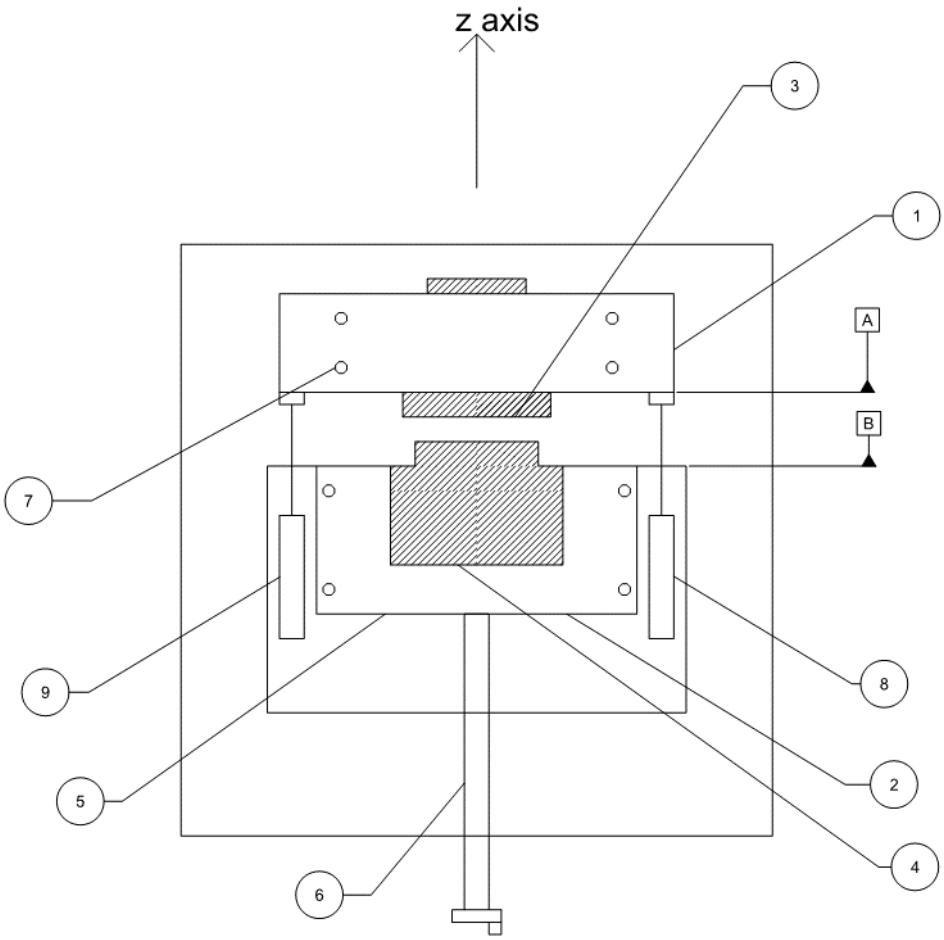

Balloon #	Description
1	Backplane plate
2	Module plate
3	Backplane connector
4	Module connector
5	Movable stage on L-bracket (The movable stage is considered to be the module plate which is mounted to the portion of L-bracket that permits z-axis movement between module plate and L-bracket.)
6	Mechanism or equivalent (Used to reposition Movable stage in z-axis). May need a less precise mechanism for mating durability. Can be a manual or automatic version.
7	Feature to align and lock connector in x and y planes.
8	Digital dial gauge or equivalent. Used to measure distance between datum A and datum B.
9	Force gauge or equivalent. Used to measure force exerted by connector spring.

FIGURE 2204-1. Concept for an optical test fixture with module connector engagement features.

4.2.4 Features for environmental and mechanical test fixtures. For tests in which the connector engagement distance is set and the connector is locked in place in the z-axis, a feature to align and lock the connector in the z-axis is sufficient in lieu of a mechanism to reposition the movable stage.

5. Implementation.

5.1 Test fixture evaluation criteria. Test fixture shall be evaluated in accordance with appendix A.

5.2 Test fixture with connector engagement distance aligned then locked in three axes . Appendix B shows a three dimensional model then drawing for each part for a test fixture that implements the features required to align the backplane and module connectors in the x-axis and y-axis, then set and lock the module connector engagement distance in the z-axis. Test fixture used for mechanical shock, vibration, most other mechanical tests and environmental testing shall incorporate features for aligning, setting connector engagement distance, and locking in three axes.

5.3 Test fixture with connector engagement distance mechanism for continuous repositioning in the z-axis. Appendix C is a placeholder that in the future will show~~s~~ a three dimensional model then drawing for each part for a test fixture that implements the features required to align the backplane and module connectors in the x-axis and y-axis; then reposition, measure and hold the module connector engagement distance stationary in the z-axis. Test fixture used for standalone optical measurements and for mating durability shall incorporate features for aligning and locking in the x-axis and y-axis, continuous repositioning in the z-axis, and maintaining position in the z-axis while optical measurements are obtained.

6. NOTES.

6.1 Intents behind standardization efforts.

6.1.1 Multiple party testing considerations. The incentive to minimize test variables, resulting in a level playing field for multiple parties testing, leads the Government to establish a baseline. This baseline includes considerations for fabrication of test samples, methods to employ launch conditions and use of specific test practices in addition to specifics for test sample configurations.

6.2 Approach.

6.3 Constraints. This constraint for rectangular connector engagement applies only to backplane and module connectors which are blind mated and require the connector engagement distance to be standardized for interoperability.

MEASUREMENT 2204

APPENDIX A

MINIMUM ESSENTIAL CHECKLIST FOR RECTANGULAR BACKPLANE CONNECTOR TEST FIXTURE

A.1. Purpose. This appendix addresses a checklist of the minimum essentials for test fixtures used for optical, mechanical and environmental testing of rectangular backplane connectors.

A.2. Usage. Table 2204 A-I is the checklist of minimum essentials for Government auditors, or their representatives, use during inspections. This checklist should be expanded at the auditor's discretion.

TABLE 2204 A-I. Minimum essential checklist for rectangular backplane connector test fixtures.

Item	Category	Item	Requirement	Compliance
1	Examinations	Parts: Figure 2204-1 balloon # 1 to 4	Test fixture includes parts in balloons # 1 to 4 and made of metal (see 4.2.2.f).	
		Module engagement range	Test fixture exceeds module engagement range of connectors under test (see 4.1 and figure 2204-1 balloon #8).	
		Means to measure spring compression	Test fixture contains means to allow spring compression measurement (see figure 2204-1 balloon #9).	
2	Features	Test fixture		
		x-axis and y-axis alignment	Ability to align and lock backplane connector in x and y planes (see 4.2.2a- c, 4.2.4 and figure 2204-I).	
		z-axis repositioning	Mechanism or equivalent and movable stage to reposition and lock module connector in z plane (see 4.2.2c, 4.2.4 and figure 2204-I).	
			Mechanism or equivalent may be automatic or manual.	
		Common adapter plate	Test fixture can be mounted to common adapter plate for expanded use (see 4.2.1 and 4.2.2.e)	
	Measurements	Tools		
		Digital dial gauge or equivalent	Test fixture includes or allows for use of measurement tool, gauge blocks, etc. used to measure distance between datum A and datum B in figure 2204-1.	
		Force gauge or equivalent	Test fixture includes or allows for use of measurement tool used to measure force exerted by connector spring.	

A.3. Notes.

A.3.1 Intended use.

A.3.1.1 Audit team. This checklist is intended to assist Government auditors or their representatives during inspections of the optical measurement system. This checklist may be augmented at the auditor's discretion; however, it is not to be reduced.

MEASUREMENT 2204

A.3.1.2 Test laboratories. When test laboratories prepare to perform rectangular backplane connector measurements with a test fixture or audits, this checklist should be used to supplement Measurement 2204, not replace it.

MEASUREMENT 2204

APPENDIX B

TEST FIXTURE WITH CONNECTOR ENGAGEMENT DISTANCE ALIGNED THEN LOCKED IN THREE AXES

B1. Illustration.

Excerpt to illustrate a three dimensional model for a test fixture that implements the features required to:
Align the backplane and module connectors in the x-axis and y-axis,
Set and lock the module connector engagement distance in the z-axis.

Illustration is shown in figure 2204 B-1.

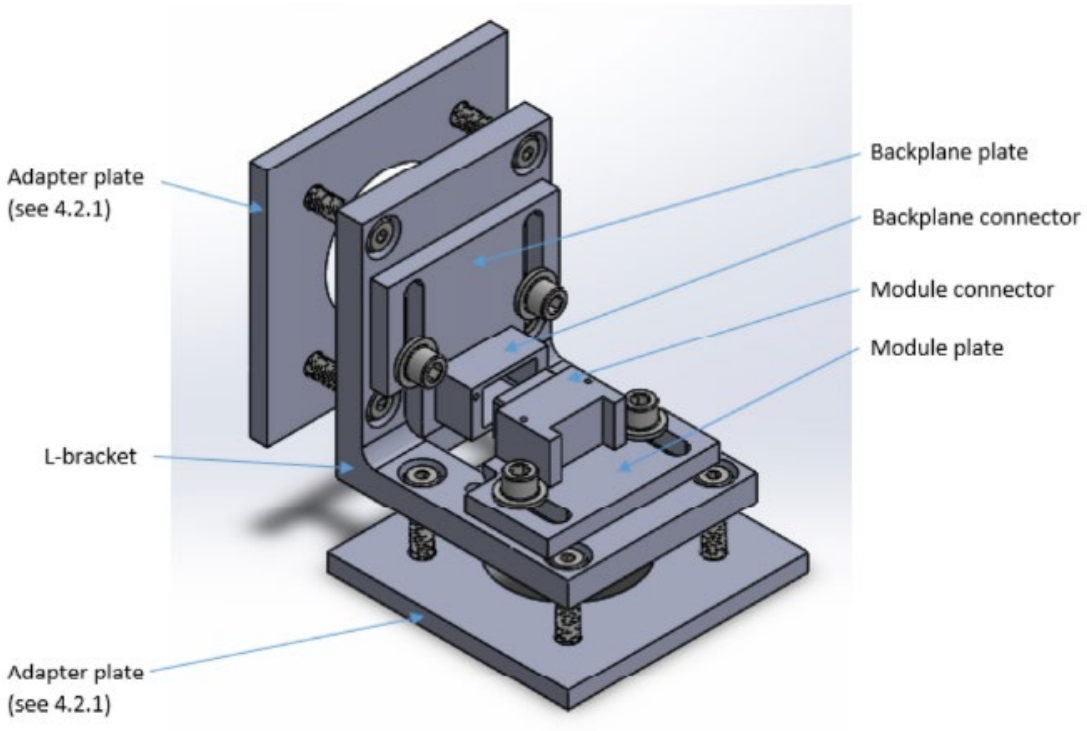

Notes:
1. 4 flanged socket head screws: McMaster-Carr P/N 92235A517 or equal.
2. 10 low profile socket head screws: McMaster-Carr P/N 92220A213 or equal.
3. Ensure sufficient grade screws are used for shock and vibration testing in lieu of those specified above.

FIGURE 2204 B-1. Three dimensional model for the test fixture.

B2. Figures for each part comprising the test fixture.

a. Excerpt to show the parts of a test fixture:
   (1) L-bracket,
   (2) Backplane plate,
   (3) Module plate.
b. Figures are shown in figure 2204 B-1 through figure 2204 B-4.

MEASUREMENT 2204

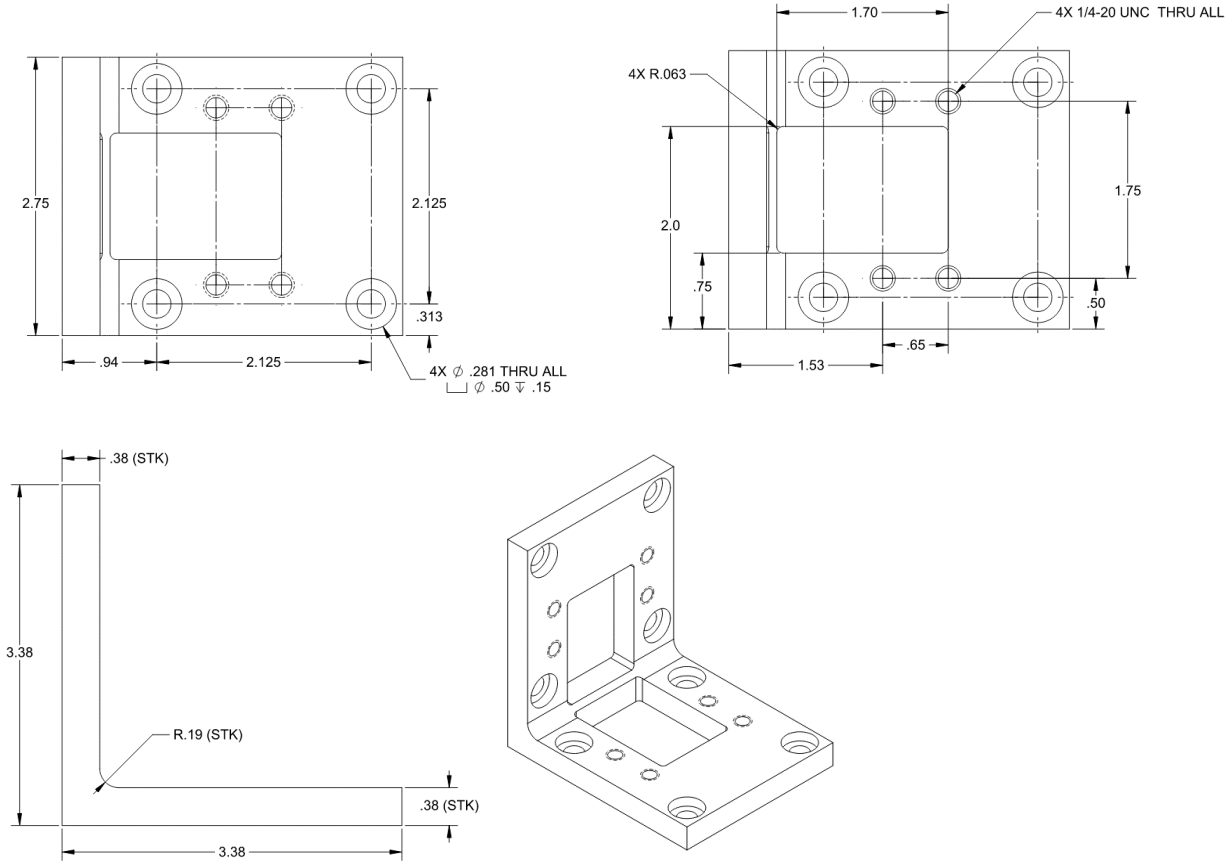

Notes:
1. Break all sharp edges.
2. Material: 6061 aluminum plate
3. All dimensions are in inches.

FIGURE 2204 B-2. L-bracket piece of the test fixture.

MEASUREMENT 2204

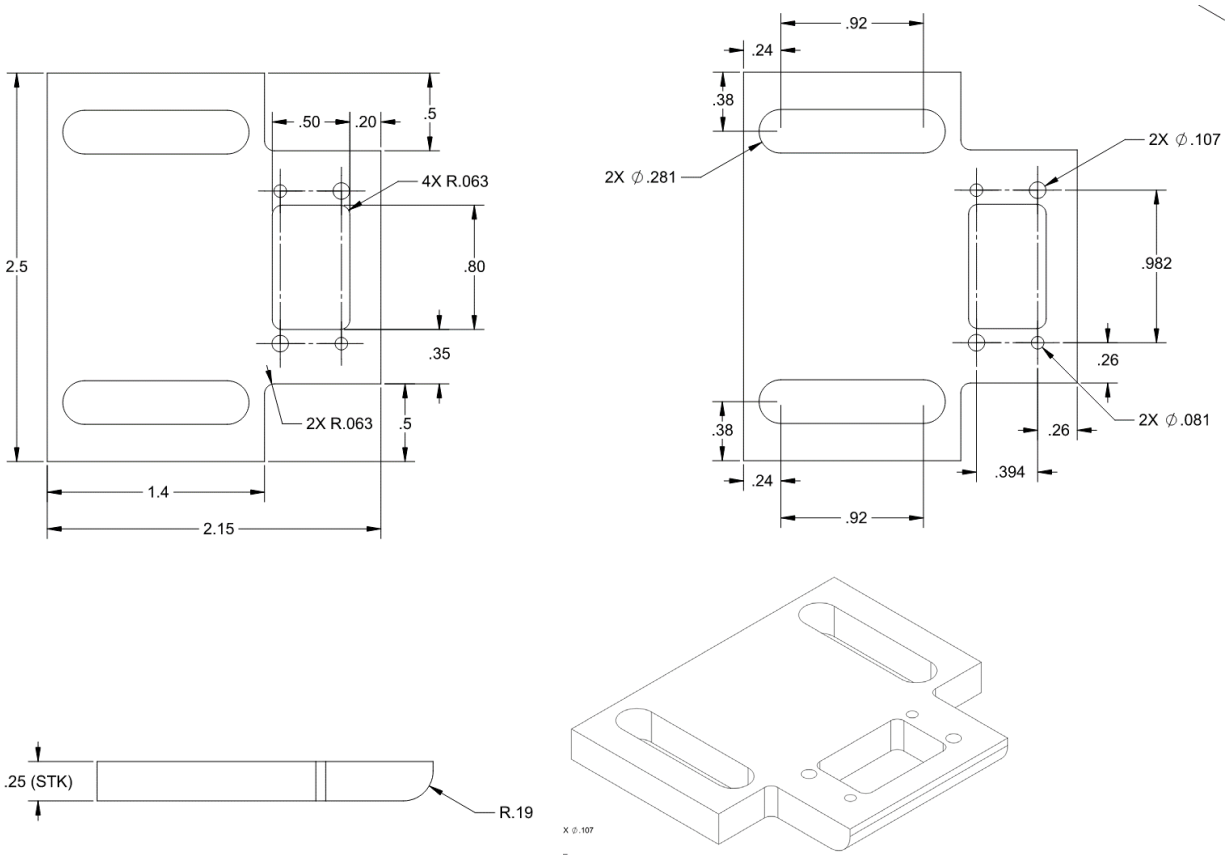

Notes:
1. Break all sharp edges.
2. Material: 6061 aluminum plate
3. All dimensions are in inches.

FIGURE 2204 B-3. Backplane plate piece of the test fixture.

MEASUREMENT 2204

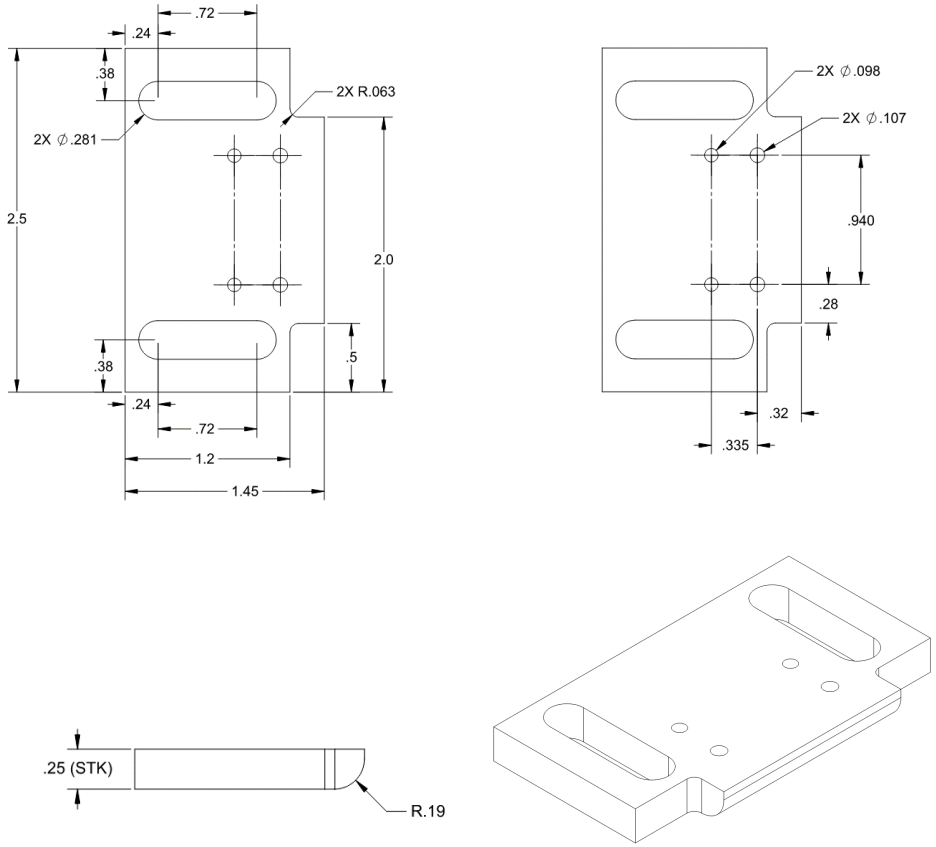

Notes:
1. Break all sharp edges.
2. Material: 6061 aluminum plate
3. All dimensions are in inches.

FIGURE 2204 B-4. Module plate piece of the test fixture

MEASUREMENT SUPPORT PROCESS 2204

APPENDIX C

TEST FIXTURE WITH CONNECTOR ENGAGEMENT DISTANCE FOR CONTINUOUS Z-AXIS REPOSITIONING

C1. Intent.

C1.1 Designs. Test fixture shall include features specified in 4.2 to align the backplane and module connectors in the x-axis and y-axis; then reposition, measure and hold the module connector engagement distance stationary in the z-axis.

C1.1.1 Design that includes appendix B test fixture. The deign may include the test fixture in appendix B with additional parts to retain portions of appendix B test fixture stationary and parts to have controlled movement of other portions in the z-axis.

C1.1.2 Design for a separate test fixture. The design shall incorporate the features specified in 4.2 including the feature to controlled movement in the z-axis.

Custodians:
Army – CR
Navy – SH
Air Force – 85
DLA - CC

Review activities:
Air Force - 20

Preparing activity:
DLA – CC

(Project: 60GP-2021-001)

NOTE: The activities listed above were interested in this document as of the date of this document. Since organizations and responsibilities can change, you should verify the currency of the information above using the ASSIST Online database at https://assist.dla.mil/.