INCH-POUND

MIL-PRF-83446/32A
w/AMENDMENT 2
6 January 2025
SUPERSEDING
MIL-PRF-83446/32A
w/AMENDMENT 1
14 February 2020

PERFORMANCE SPECIFICATION SHEET

COILS, RADIO FREQUENCY, CHIP, FIXED, IRON CORE

This specification is approved for use by all Departments and Agencies of the Department of Defense.

The requirements for acquiring the product described herein shall consist of this specification sheet and MIL-PRF-83446.

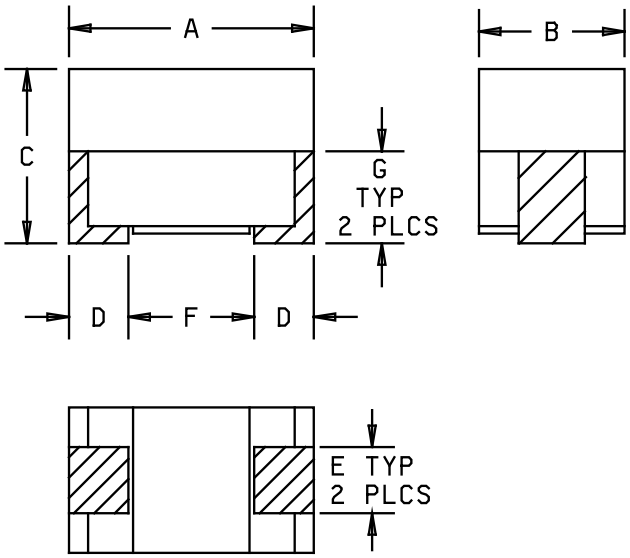

	Inches	Millimeters
A	.300 to .325	7.62 to 8.26
B	.105 to .125	2.67 to 3.18
C	.125 to .145	3.18 to 3.68
D	.020 Min.	.508 Min.
E	.040 to .060	1.02 to 1.52
F	.190 Ref.	4.83 Ref.
G	.070 Ref.	1.78 Ref.

NOTES:
1. Dimensions are in inches.
2. Metric equivalents are given for general information only.

FIGURE 1. Dimensions and configuration.

DISTRIBUTION STATEMENT A. Approved for public release; distribution is unlimited.

TABLE I. Electrical characteristics (initial).

Dash Number	Inductance µH ±10%	Q (min)	Test Frequency (L and Q) MHz	Self Resonant Frequency MHz (min)	DC Resistance Ohms (max)	Current Rating mA (max)
-01	1.20	25	7.9	150	.18	620
-02	1.50	28	7.9	140	.22	560
-03	1.80	30	7.9	125	.30	480
-04	2.20	30	7.9	115	.40	415
-05	2.70	37	7.9	100	.55	355
-06	3.30	45	7.9	90	.85	285
-07	3.90	45	7.9	80	1.00	263
-08	4.70	45	7.9	75	1.20	239
-09	5.60	50	7.9	65	1.80	195
-10	6.80	50	7.9	60	2.00	185
-11	8.20	55	7.9	55	2.70	160
-12	10.0	55	7.9	50	3.30	144
-13	12.0	45	2.5	40	2.70	160
-14	15.0	45	2.5	35	2.80	157
-15	18.0	45	2.5	30	3.10	149
-16	22.0	45	2.5	25	3.30	144
-17	27.0	45	2.5	20	3.50	140

TABLE II. Electrical characteristics (final).

Inspection group	Allowable percent variation from the initial measurement			
Qualification Inspection:	Inductance	Q	Self-resonant Frequency	DC resistance
Group II	±5	-10	-8	±3 (+.001 ohm)
Group IV	±5	-10	-10	±3 (+.001 ohm)
Group V	±5	-15	-----	-----
Quality Conformance Inspection:				
Group C				
Subgroup II	±5	-15	-10	±2 (+.001 ohm)
Subgroup IV	±5	-10	-8	±3 (+.001 ohm)

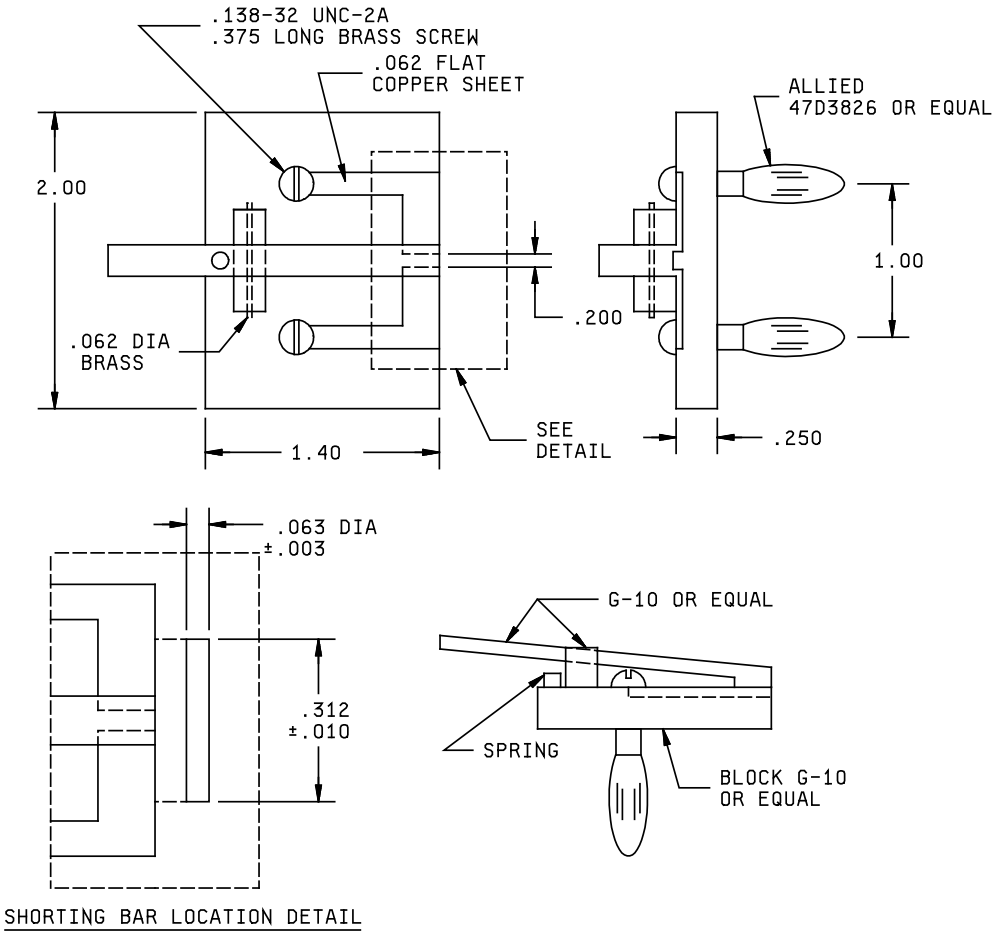

NOTES:
1. Dimensions are in inches.
2. Shorting bar material is brass.
3. The total fixture and residual inductance is approximately .049μH (for references only).

FIGURE 2. General test fixture, (TF - 388).

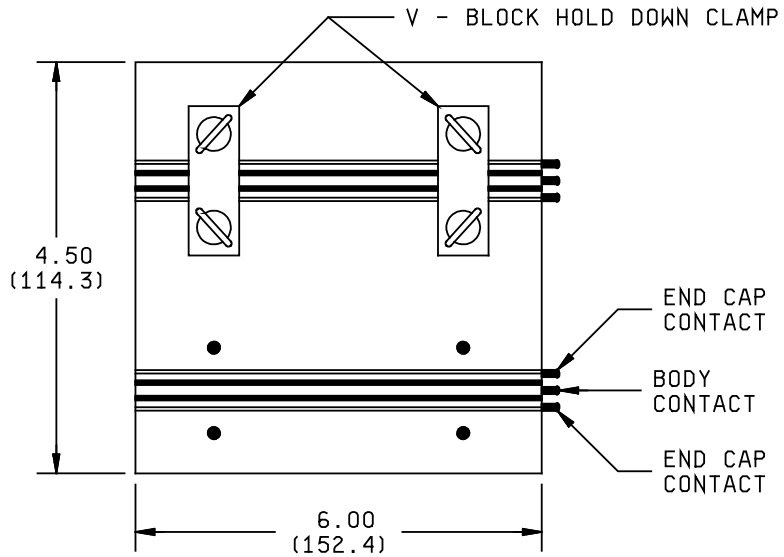

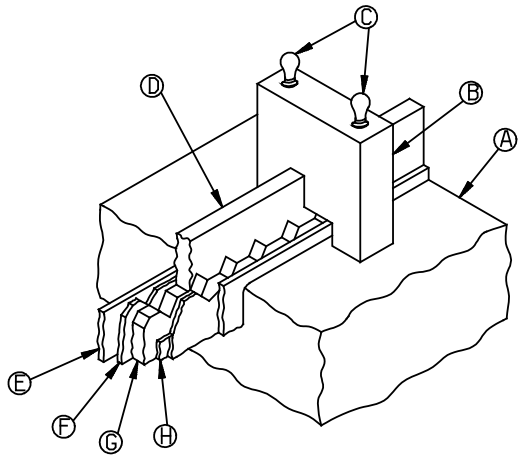

ENLARGED CUT-AWAY OF CLAMP

Legend	
LTR	Description
A	G-10 base
B	Upper V-block hold-down clamp
C	Clamp screws
D	Upper V-block (body contact)
E	End cap contact retaining wall
F	End cap contact V-block (in contact with E)
G	Lower V-block (body contact)
H	G-10 insulators (separating G from F/E)

NOTES:
1. Dimensions are in inches.
2. Metric equivalents are given for general information only.
3. Metric equivalents are in parentheses.

FIGURE 3. Test fixture for insulation resistance, dielectric withstanding voltage and barometric pressure.

REQUIREMENTS:

Dimensions and configuration: See figure 1.

Bond strength: Force 2 pounds.

Weight: 0.30 gram maximum.

Operating temperature range: -55°C to +105°C.

Temperature rise (at +90°C): +15°C.

Maximum operating temperature: +105°C.

Altitude: 70,000 feet.

Dielectric withstanding voltage: MIL-STD-202-301, test voltage 500 volts rms.

Barometric pressure: MIL-STD-202-105, test condition C, (70,000 feet), test voltage 200 volts rms.

Electrical characteristics (initial): See table I.

Electrical characteristics (final): See table II.

Test fixture: Tests shall be performed using test fixtures shown on figure 2 and 3, or equivalent.

Part or Identifying Number (PIN): The PIN shall be in the following form:

M83446/32 -04 F

Sequentially assigned dash Numbers (see table I)

Termination finish (see MIL-PRF-83446)

Referenced documents. In addition to MIL-PRF-83446, this document references the following:

MIL-STD-202-105 MIL-STD-202-301

Amendment notations. The margins of this specification are marked with vertical lines to indicate modifications generated by this amendment. This was done as a convenience only and the Government assumes no liability whatsoever for any inaccuracies in these notations. Bidders and contractors are cautioned to evaluate the requirements of this document based on the entire content irrespective of the marginal notations.

Custodians:
Army - CR
Navy - EC
Air Force - 85
DLA-CC

Preparing activity:
DLA - CC

(Project 5950-2025-006)

Review activities:
Army - MI
Navy - AS, OS
Air Force – 19

NOTE: The activities listed above were interested in this document as of the date of this document. Since organizations and responsibilities can change, you should verify the currency of the information above using the ASSIST Online database at https://assist.dla.mil/ .