INCH-POUND

MIL-PRF-83446/23A
w/AMENDMENT 2
6 November 2024
SUPERSEDING
MIL-PRF-83446/23A
w/AMENDMENT 1
2 September 2019

PERFORMANCE SPECIFICATION SHEET

COILS, RADIO FREQUENCY, CHIP, FIXED, PHENOLIC CORE

This specification is approved for use by all Departments and Agencies of the Department of Defense.

The requirements for acquiring the products described herein shall consist of this specification and MIL-PRF-83446.

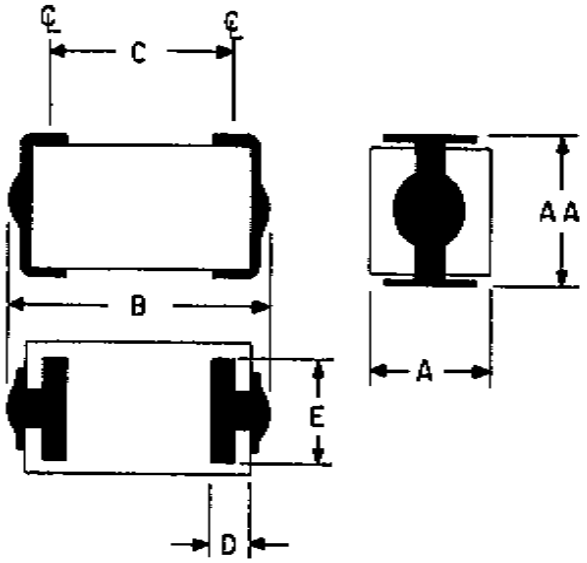

Letter	Dimensions	
	Minimum	Maximum
A	.105 (2.67)	.125 (3.18)
AA	.125 (3.18)	.145 (3.68)
B	.300 (7.62)	.320 (8.13)
C	.230 (5.84)	.260 (6.60)
D	.020 (0.51)	.040 (1.02)
E	.075 (1.91)	.095 (2.41)

NOTES:
1. Dimensions are in inches.
2. Metric equivalents are given for general information only.
3. Metric equivalents are in parentheses.
4. Dimensions AA and B are measured over the terminals.

FIGURE 1. Dimensions and configuration.

DISTRIBUTION STATEMENT A. Approved for public release; distribution is unlimited.

TABLE I. Electrical characteristics (initial) and dash numbers.

Dash number	Inductance ±10% (μH)	Q (min)	Test Frequency (L and Q) (MHz)	Self resonant frequency (min) MHz	DC resistance (max) ohms	Current rating (max) mA
-01	0.10	40	25	680	.08	1380
-02	0.12	40	25	640	.09	1300
-03	0.15	38	25	600	.10	1230
-04	0.18	35	25	550	.12	1120
-05	0.22	33	25	510	.14	1040
-06	0.27	33	25	430	.16	975
-07	0.33	30	25	410	.22	830
-08	0.39	30	25	365	.30	710
-09	0.47	30	25	330	.35	660
-10	0.56	30	25	300	.50	550
-11	0.68	28	25	275	.60	500
-12	0.82	28	25	250	.85	420
-13	1.00	25	25	230	1.00	390

TABLE II. Electrical characteristics (final).

Inspection group	Allowable variation from initial measurements			
	Inductance (Percent)	DC resistance	Self-resonant frequency (Percent)	Q (Percent)
Qualification inspection				
Group II	±5	±(3% +.001 ohm)	-8	-10
Group IV	±5	±(3% +.001 ohm)	-10	-10
Group V	±5	---	---	-15
Conformance inspection group C				
Subgroup II	±5	±(2% +.001 ohm)	-10	-15
Subgroup IV	±5	±(3% +.001 ohm)	-8	-10

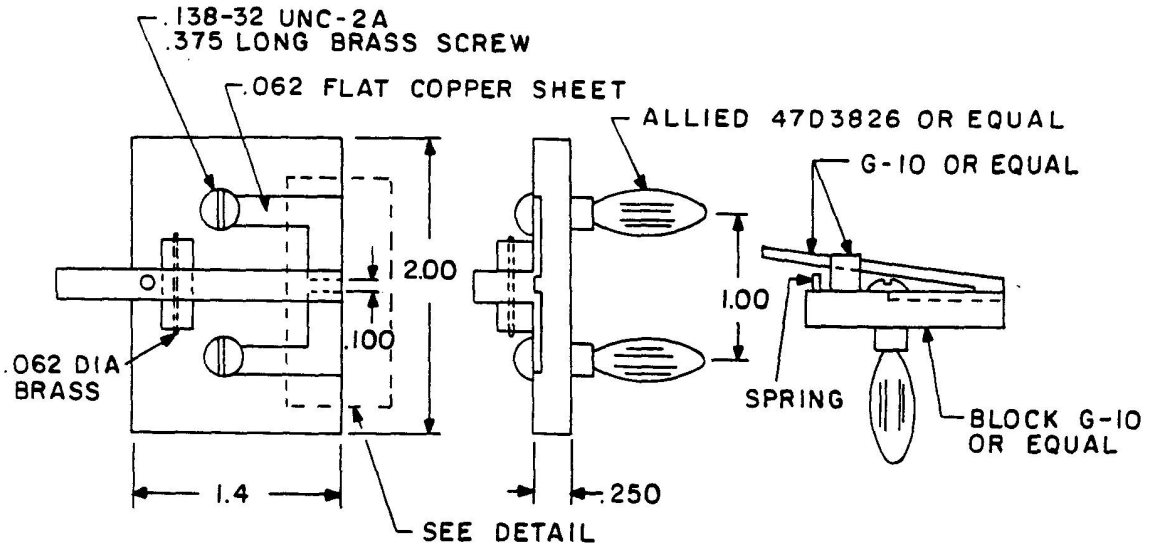

Inches	mm
.003	0.08
.010	0.25
.062	1.57
.063	1.60
.100	2.54
.138	3.51
.250	6.35
.312	7.92
.375	9.52
1.000	25.40
1.400	35.56
2.000	50.80

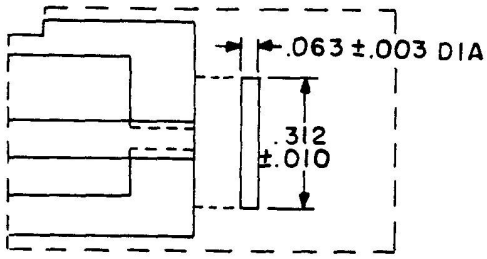

SHORTING BAR LOCATION DETAIL

NOTES:
1. Dimensions are in inches.
2. Metric equivalents are given for general information.
3. Shorting bar material is brass.
4. The total fixture and residual inductance is approximately .049 µH (for reference only).

FIGURE 2. General test fixture, (TF-397).

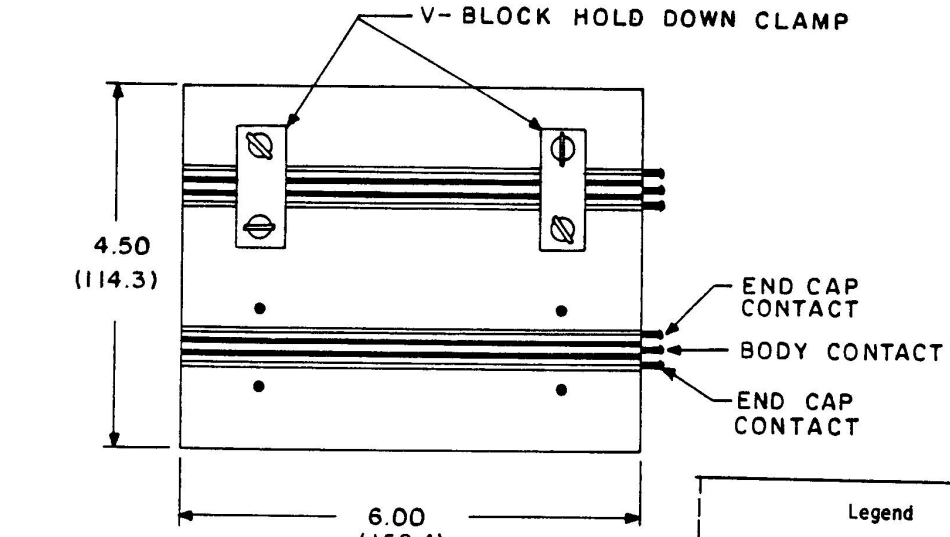

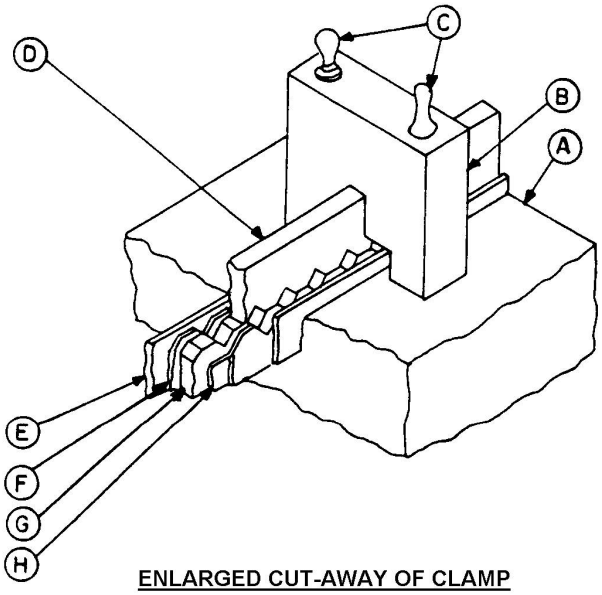

ENLARGED CUT-AWAY OF CLAMP

Legend	
LTR	Description
A	G-10 base
B	Upper V-block hold-down clamp
C	Clamp screws
D	Upper V-block (body contact)
E	End cap contact retaining wall
F	End cap contact V-block (in contact with E)
G	Lower V-block (body contact)
H	G-10 insulators (separating G from F/E)

NOTES:
1. Dimensions are in inches.
2. Metric equivalents are given for general information only.
3. Metric equivalents are in parentheses.

FIGURE 3. Test fixture for insulation resistance, dielectric withstanding voltage and barometric pressure.

REQUIREMENTS:

Dimensions and configuration: See figure 1.

Bond strength: Force 2 pounds.

Weight: 0.30 gram, maximum.

Operating temperature range: -55°C to +125°C.

Temperature rise (at 90°C): 35°C.

Maximum operating temperature: 125°C.

Altitude: 70,000 feet.

Dielectric withstanding voltage: MIL-STD-202-301, test voltage 500 volts rms.

Barometric pressure: MIL-STD-202-105, test condition C, (70,000 feet), test voltage 200 volts rms.

Electrical characteristics (initial): See table I.

Electrical characteristics (final): See table II.

Test fixture: Tests shall be performed using test fixtures shown on figures 2 and 3, or equivalent.

Part or Identifying Number (PIN): The part number shall be in the following form.

M83446/23-	04	F
	|	|
	Sequentially assigned dash Numbers (see table I and II)	Termination finish (see MIL-PRF-83446)

Amendment notations. The margins of this specification are marked with vertical lines to indicate modifications generated by this amendment. This was done as a convenience only and the Government assumes no liability whatsoever for any inaccuracies in these notations. Bidders and contractors are cautioned to evaluate the requirements of this document based on the entire content irrespective of the marginal notations.

Referenced documents. In addition to MIL-PRF-83446, this document references the following:

MIL-STD-202-105
MIL-STD-202-301

Custodians:
Army - CR
Navy - EC
Air Force - 85
DLA - CC

Review activities:
Army - MI
Navy - AS, OS
Air Force - 19

Preparing activity:
DLA - CC

(Project 5950-2024-034)

NOTE: The activities listed above were interested in this document as of the date of this document. Since organizations and responsibilities can change, you should verify the currency of the information above using the ASSIST Online database at https://assist.dla.mil.