INCH - POUND
MIL-PRF-83446/19B
w/AMENDMENT 3
1 October 2025
SUPERSEDING
MIL-PRF-83446/19B
w/AMENDMENT 2
6 November 2024

PERFORMANCE SPECIFICATION SHEET

COILS, RADIO FREQUENCY, VARIABLE

This specification is approved for use by all
Departments and Agencies of the Department of Defense.

The requirements for acquiring the products described
herein shall consist of this specification and MIL-PRF-83446.

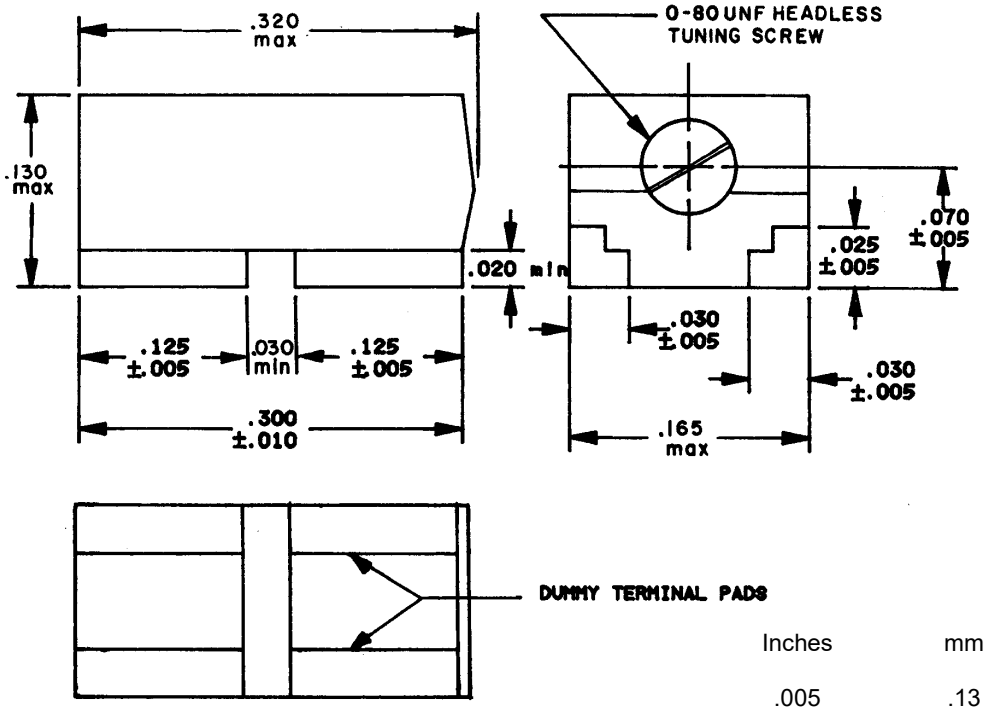

Inches	mm
.005	.13
.010	.25
.020	.51
.025	.64
.030	.76
.070	1.78
.130	3.30
.165	4.19
.300	7.62
.320	8.13

NOTES:
1. Dimensions are in inches.
2. Metric equivalents are given for general information only.

FIGURE 1. Variable, chip coil.

AMSC N/A
FSC 5950

DISTRIBUTION STATEMENT A. Approved for public release; distribution is unlimited.

REQUIREMENTS:

Dimensions and configuration: See figure 1.

Case: Epoxy.

Weight: 0.5 gram, maximum.

Turning torque: .05 ounce-inches minimum, .50 ounce-inches maximum.

Operating temperature range: -55°C to +125°C.

Temperature rise (at 90°C): 35°C.

Maximum operating temperature: 125°C.

Altitude: 70,000 feet.

Dielectric withstanding voltage: MIL-STD-202-301, test voltage 700 volts rms.

Barometric pressure: MIL-STD-202-105, test condition C, (70,000 feet), test voltage 200 volts rms.

Electrical characteristics (initial): See table I.

Electrical characteristics (final): See table II.

Part or Identifying Number (PIN): The part number shall be in the following form.

M83446/19-	04	B
	Sequentially assigned dash Numbers (see table I)	Termination finish (see MIL-PRF-83446)

TABLE I. Electrical characteristics (initial).

Dash number	Inductance (μH)			Q min over L range	Q (typ) (at L nom)	Test Freq-uency (MHz) 1/	Self resonant frequency (min) MHz	DC Resistance At 25 °C (max) ohms	Current (max) mA 2/	Incre-mental current 3/
	Min	Nom	Max							
01	0.010	0.013	0.016	50	60	200	1200	0.03	250	----
02	0.018	0.022	0.025	50	60	200	1050	0.07	250	----
03	0.036	0.044	0.051	40	50	100	740	0.13	250	----
04	0.049	0.065	0.076	40	50	100	600	0.20	250	----
05	0.071	0.085	0.100	30	40	25	530	0.32	250	----
06	0.080	0.105	0.130	30	40	25	525	0.34	200	----
07	0.107	0.129	0.150	30	40	25	500	0.35	200	----
08	0.120	0.150	0.180	30	40	25	470	0.41	180	----
09	0.157	0.189	0.220	30	40	25	400	0.45	180	----
10	0.193	0.232	0.270	30	40	25	350	0.50	180	----
11	0.236	0.283	0.330	30	40	25	320	0.60	140	----
12	0.230	0.300	0.370	30	40	25	275	0.62	140	----
13	0.336	0.403	0.470	30	40	25	255	0.65	100	----
14	0.400	0.480	0.560	30	40	25	230	0.75	100	----
15	0.485	0.583	0.680	30	40	25	190	0.85	100	----
16	0.565	0.660	0.760	30	40	25	170	0.88	100	----
17	0.586	0.703	0.820	30	40	25	150	0.90	100	----
18	0.616	0.783	0.950	30	40	25	145	0.95	100	----
19	0.666	0.833	1.00	25	35	25	140	0.98	100	----
20	1.00	1.25	1.50	25	35	7.9	110	1.0	100	----
21	1.47	1.84	2.20	25	35	7.9	100	1.4	80	----
22	1.80	2.25	2.70	25	35	7.9	89	1.6	75	----
23	2.20	2.75	3.30	25	35	7.9	77	1.8	65	----
24	3.13	3.92	4.70	25	35	7.9	49	2.2	60	----
25	3.87	4.84	5.80	25	35	7.9	38	2.8	58	----
26	4.53	5.67	6.80	25	35	7.9	36	3.0	55	----
27	5.47	6.84	8.20	25	35	7.9	21	3.0	55	----
28	6.00	7.50	10.00	25	35	2.5	20	2.8	55	50
29	6.50	9.75	13.00	25	35	2.5	19	3.0	53	45

See footnotes at end of table.

TABLE I. Electrical characteristics (initial) - Continued.

Dash number	Inductance (μH)			Q min over L range	Q (typ) (at L nom)	Test Freq-uency (MHz) 1/	Self resonant frequency (min) MHz	DC Resistance At 25 °C (max) ohms	Current (max) mA 2/	Incre-mental current 3/
	Min	Nom	Max							
30	8.00	12.00	16.00	25	35	2.5	16	3.4	50	40
31	10.00	15.00	20.00	25	35	2.5	14	3.5	43	37
32	11.00	16.50	22.00	25	35	2.5	12	4.0	43	36
33	15.00	22.50	30.00	25	35	2.5	11	4.5	40	32
34	18.00	27.00	36.00	25	35	2.5	10	5.0	40	31
35	23.00	35.00	47.00	25	35	2.5	6.5	5.7	39	29
36	28.00	42.00	56.00	25	35	2.5	6.3	7.0	35	28
37	34.00	51.00	68.00	25	35	2.5	6.2	8.0	30	26
38	37.00	56.00	75.00	25	35	2.5	5.9	9.0	30	25
39	43.00	65.00	86.00	25	35	2.5	5.6	10.0	28	23
40	50.00	75.00	100	25	35	2.5	5.3	12.0	27	20
41	60.00	90.00	120	20	30	0.79	4.4	14.0	25	20
42	75.00	112.5	150	20	30	0.79	4.0	18.0	22	20
43	235	353	470	20	30	0.79	2.1	30.0	16	16
44	340	510	680	20	30	0.79	2.1	35.0	15	15
45	500	750	1000	20	30	0.79	1.1	75.0	11	11

1/ Test frequency range 0.25 through 25 MHz: For electrical characteristics measurements, use the HP260-A Q Meter, HP4342A, HP250B RX Meter, or equivalent with the TF-405 test fixture, or equivalent (see figure 2). Fixture inductance (approximately 0.038 μH) and residual Q-meter inductance (approximately 0.01 μH) should be subtracted from indicated inductance.

Test frequency range 100 through 200 MHz: For electrical characteristics measurements, use the HP190-A Q Meter, HP260-A Q Meter, HP4342A, HP250B RX Meter, or equivalent with the TF-405 test fixture, or equivalent (see figure 2). Fixture inductance (approximately 0.009 μH) should be subtracted from indicated inductance.

2/ Maximum current allowed is not to exceed the specified temperature rise.

3/ Applicable to ferrite core only.

TABLE II. Electrical characteristics (final).

Inspection group	Allowable variation from initial measurements			
	Inductance (Percent)	DC resistance	Self-resonant frequency (Percent)	Q (Percent)
Qualification inspection				
Group II	±5	±(3% +.001 ohm)	-8	-10
Group IV	±5	±(2% +.001 ohm)	-10	-10
Group V	±2	---	---	-10
Conformance inspection group C				
Subgroup II	±5	±(3% +.001 ohm)	-8	-10
Subgroup IV	±5	±(3% +.001 ohm)	-8	-10

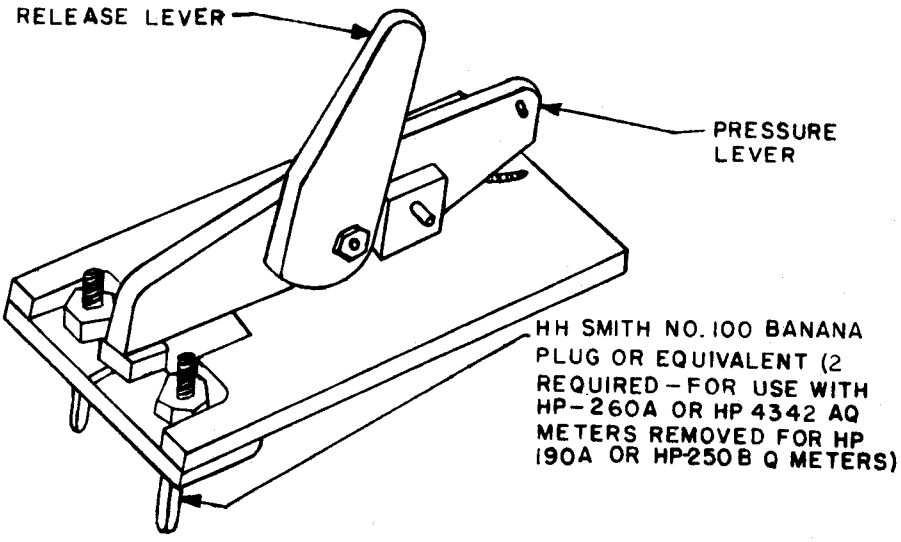

FIGURE 2. Typical chip coil test fixture (TF-405, or equivalent).

Amendment notations. The margins of this specification are marked with vertical lines to indicate modifications generated by this amendment. This was done as a convenience only and the Government assumes no liability whatsoever for any inaccuracies in these notations. Bidders and contractors are cautioned to evaluate the requirements of this document based on the entire content irrespective of the marginal notations.

Referenced documents. In addition to MIL-PRF-83446, this document references the following:

MIL-STD-202-105
MIL-STD-202-301

Custodians:
Army - CR
Navy - EC
Air Force - 85
DLA - CC

Review activities:
Army - MI
Navy - AS, OS
Air Force - 19

Preparing activity:
DLA – CC

(Project 5950-2025-050)

NOTE: The activities listed above were interested in this document as of the date of this document. Since organizations and responsibilities can change, you should verify the currency of the information above using the ASSIST Online database at https://assist.dla.mil.