INCH-POUND

MIL-PRF-83383F
w/AMENDMENT 1
4 February 2019
SUPERSEDING
MIL-PRF-83383F
27 June 2017

PERFORMANCE SPECIFICATION

CIRCUIT BREAKERS, REMOTE CONTROL, THERMAL, TRIP FREE GENERAL SPECIFICATION FOR

This specification is approved for use by all Departments and Agencies of the Department of Defense.

1. SCOPE

1.1. Scope. This specification covers the general requirements and test procedures for single and triple pole, trip-free, thermal, remote control circuit breakers for use in electric systems conforming to MIL-STD-704. These remote control circuit breakers are capable of being remotely set or tripped and provide indication of the main contact position by use of a 0.5 ampere, push-pull, trip-free circuit breaker (not covered by this specification). These remote control circuit breakers include auxiliary contacts (see 6.5.4) and terminals for control/monitor circuits. Hereinafter, a remote control circuit breaker is referred to as an RCCB (see 6.9).

1.2 Part or Identifying Number (PIN). The PIN will consist of the letter “M”, the basic number of the specification sheet, and an assigned dash number (see 3.1), as shown in the following example:

M	83383/01	-01
Designator	Specification sheet number	Dash number (see 3.1 for details)

2. APPLICABLE DOCUMENTS

2.1 General. The documents listed in this section are specified in sections 3 and 4 of this specification. This section does not include documents cited in other sections of this specification or recommended for additional information or as examples. While every effort has been made to ensure the completeness of this list, document users are cautioned that they must meet all specified requirements of documents cited in sections 3 and 4 of this specification, whether or not they are listed.

2.2 Government documents.

2.2.1 Specifications, standards, and handbooks. The following specifications, standards, and handbooks form a part of this document to the extent specified herein. Unless otherwise specified, the issues of these documents are those cited in the solicitation or contract (see 6.2).

Comments, suggestions or questions on this document should be addressed to DLA Land and Maritime, ATTN: VAT, Post Office Box 3990, Columbus, OH 43218-3990, or emailed to CircuitProtect@dla.mil. Since contact information can change, you may want to verify the currency of this address information using the ASSIST Online database at https://assist.dla.mil/.

FEDERAL STANDARDS

FED-STD-H28	-	Screw-Thread Standards for Federal Services.

DEPARTMENT OF DEFENSE SPECIFICATIONS

MIL-PRF-5606	-	Hydraulic Fluid, Petroleum Base; Aircraft; Missile and Ordnance
MIL-DTL-5624	-	Turbine Fuel, Aviation, Grades JP-4 and JP-5.
MIL-PRF-7808	-	Lubricating Oil, Aircraft Turbine Engine, Synthetic Base.
MIL-PRF-23699	-	Lubricating Oil, Aircraft Turbine Engine, Synthetic Base, NATO Code Numbers O-152, O-154, O-156, and O-167.
MIL-PRF-83282	-	Hydraulic Fluid, Fire Resistant, Synthetic Hydrocarbon Base, Metric, NATO Code Number H-537
MIL-PRF-87937	-	Cleaning Compound, Aerospace Equipment.
MIL-PRF-83383/1	-	Circuit Breakers, Remote Control, ac-dc, Thermal, Trip-Free, Series Trip, Single Pole, (5 to 100 Amperes).
MIL-PRF-83383/2	-	Circuit Breakers, Remote Control, ac-dc, Thermal, Trip-Free, Series Trip, Single Pole, Auxiliary Contacts (5 to 100 Amperes).
MIL-PRF-83383/4	-	Circuit Breakers, Remote Control, ac-dc, Thermal, Trip-Free, Series Trip, Triple Pole, Auxiliary Contacts (5 to 100 Amperes).

DEPARTMENT OF DEFENSE STANDARDS

MIL-STD-202	-	Test Methods for Electronic and Electrical Component Parts.
MIL-STD-202-101	-	Method 101, Salt Atmosphere (Corrosion)
MIL-STD-202-106	-	Method 106, Moisture Resistance
MIL-STD-202-107	-	Method 107, Thermal Shock
MIL-STD-202-109	-	Method 109, Explosion
MIL-STD-202-110	-	Method 110, Sand and Dust
MIL-STD-202-204	-	Method 204, Vibration Frequency
MIL-STD-202-211	-	Method 211, Terminal Strength
MIL-STD-202-213	-	Method 213, Shock (Specified Pulse)
MIL-STD-202-215	-	Method 215, Resistance to Solvents
MIL-STD-202-301	-	Method 301, Dielectric Withstanding Voltage
MIL-STD-202-302	-	Method 302, Insulation Resistance
MIL-STD-202-310	-	Method 310, Contact-Chatter Monitoring
MIL-STD-461	-	Requirements for the Control of Electromagnetic Interference Characteristics of Subsystems and Equipment.
MIL-STD-704	-	Aircraft Electric Power Characteristics.
MIL-STD-1285	-	Marking of Electrical and Electronic Parts.

(Copies of these documents are available online at https://quicksearch.dla.mil/.)

2.3 Non-Government publications. The following documents form a part of this document to the extent specified herein. Unless otherwise specified, the issues of these documents are those cited in the solicitation or contract.

INTERNATIONAL ORGANIZATION FOR STANDARDIZATION (ISO)

ISO 10012	-	Measurement Management Systems - Requirements for Measurement Processes and Measuring Equipment.
ISO/IEC 17025	-	General requirements for the competence of testing and calibration Laboratories.

(Copies are available online at http://www.iso.org/.)

SAE International

SAE AS1241	-	Fire Resistant Phosphate Ester Hydraulic Fluid for Aircraft.
SAE AMS1424	-	Fluid, Aircraft Deicing/Anti-Icing, SAE Type I.
SAE AS39029/1	-	Contacts, Electrical Connector, Pin, Crimp Removable, (For MIL-T-81714, Terminal Junction System).
SAE AS81714	-	Terminal Junction System (TJS), Environment Resistant, General Specification for.

(Copies of these documents are available from http://www.sae.org/.)

2.4 Order of precedence. In the event of a conflict between the text of this document and the references cited herein (except for related specification sheets), the text of this document takes precedence. Nothing in this document, however, supersedes applicable laws and regulations unless a specific exemption has been obtained.

3. REQUIREMENTS

3.1 Specification sheets. The individual item requirements shall be as specified herein and in accordance with the applicable specification sheet. In the event of any conflict between the requirements of this specification and the specification sheet, the latter shall govern.

3.2 Qualification. RCCB's furnished under this specification shall be products that are authorized by the qualifying activity for listing on the applicable qualified products list before contract award (see 4.4 and 6.3).

3.3 Materials. The materials shall be as specified herein. When materials are not specified, materials shall be used which enable the RCCB's to meet the performance requirements of this specification. Note, however, that the tin content of RCCB components and solder shall not exceed 97 percent, by mass. Tin shall be alloyed with a minimum of 3 percent lead, by mass (see 3.3.7). Acceptance or approval of any constituent material shall not be construed as a guarantee of the acceptance of the finished product.

3.3.1 Metals. All metals used in the construction of circuit breakers shall be corrosion resistant or shall be suitably protected to resist corrosion. The use of dissimilar metals shall be avoided. Where contact between dissimilar metals is unavoidable, the metals shall be protected against electrolytic corrosion. When thermostatic bimetals and trimetals are used, corrosion resulting from tests specified herein shall not adversely affect the performance of the breaker.

3.3.1.1 Dissimilar metals. When dissimilar metals are used in intimate contact with each other, protection against electrolysis and corrosion shall be provided. The use of dissimilar metals in contact, which tend toward active electrolytic corrosion is not acceptable. However, metal plating or metal spraying of dissimilar base metals to provide similar or suitable abutting surfaces is permitted. The use of dissimilar metals separated by a suitable insulating material is also permitted. Dissimilar metals are defined in 6.4.

3.3.2 Plastics. Plastic materials may be used provided the RCCBs meet all the performance requirements of this specification. The plastic materials used shall neither support combustion nor give off noxious gases when subjected to arcs, such as those caused by interrupting heavy short circuit currents, or explosions of gaseous vapors to which the materials may be subjected in service. Plastic materials with cellulose fillers will not be permitted in parts that may be subjected to arcing or surface creepage. For guidance on plastics, see 6.4.1

3.3.3 Fungus resistance. Materials shall be used that are not nutrients for fungus. For guidance on fungus resistance, see 6.4.2.

3.3.4 Solder. Solder for electronic components shall be of such a quality as to enable the RCCB to meet the performance requirements of this specification. Tin content of solder shall not exceed 97 percent, by mass. Tin shall be alloyed with a minimum of 3 percent lead, by mass (see 6.4.5).

3.3.5 Soldering flux. Soldering flux for electronic components shall be of such a quality as to enable the RCCB to meet the performance requirements of this specification. No acid, acid salts, or type RA fluxes shall be used in preparation for or during soldering. For guidance on soldering flux, see 6.4.3.

3.3.6 Electronic components. Electronic components selected shall be such that the RCCB shall meet the performance requirements and product characteristics specified herein. The manufacturer shall establish an evaluation program in accordance with Appendix A.

3.3.7 Finishes and plating. The use of pure tin, as an underplate or final finish, is prohibited both internally and externally. Tin content shall not exceed 97 percent, by mass. Tin shall be alloyed with a minimum of 3 percent lead, by mass (see 6.4.5).

3.4 Interface and physical dimensions. The RCCB shall be of the interface, weight, and physical dimensions specified (see 3.1). All poles of triple pole RCCB's shall be mechanically ganged together.

3.4.1 Trip-free feature. The RCCB shall be such that the circuit cannot be maintained closed when any pole is carrying overload currents that would normally automatically trip the circuit breaker to the open position.

3.4.2 Trip indication or warning label. The RCCB shall provide positive indication of the main contact position or a warning label shall be furnished with the RCCB (see 3.1). Electrical actuation of the indicator is not acceptable.

3.4.2.1 Remote trip indication. The RCCB shall be such that when the circuit breaker contacts open automatically on overload, the RCCB shall cause the remote actuator to indicate the operation by moving to the "open" tripped position.

3.4.3 Attitude. The RCCB shall trip within maximum and minimum limits of the specified trip times (see 3.1, 6.5.1 and 6.5.2), when mounted in any of three mutually perpendicular axes (see 4.6.4).

3.4.4 Controls.

3.4.4.1 Indicator/control unit (I/CU). The RCCB shall be capable of remote actuation by means of an I/CU connected between a control terminal of the RCCB and supply ground (see 3.1). A load control switch or subsystem relay contact may be connected in series with the I/CU. The I/CU (not furnished under this specification) shall be a 0.5 ampere, trip-free circuit breaker, with trip times and internal impedance defined in the applicable specification sheet.

3.4.5 Electrical connections. Connections to external circuits shall be as specified (see 3.1).

3.4.5.1 Line and load terminals (see 6.5.3). The main line and load terminals shall be as specified (see 3.1). Each terminal shall be capable of carrying rated current and voltage per pole of the RCCB.

3.4.5.2 Control and auxiliary contact terminals (see 6.5.4). The control terminals and auxiliary contact terminals shall meet the performance of a terminal junction system (TJS) in accordance with SAE-AS81714 to accept pin contact, part number SAE-AS39029/1-100 or -101 in accordance with SAE-AS39029/1. Auxiliary contacts shall be of a single pole, double throw configuration. The auxiliary contacts shall be arranged in a manner to insure (regardless of actuator position) that the normally open contacts are closed when the main contacts are closed.

3.4.6 Threaded parts. Screw threads shall be in accordance with FED-STD-H28 and as specified (see 3.1). RCCB's shall be supplied with the specified hardware assembled in proper order.

3.4.7 Solder. Solder shall not be used primarily for obtaining mechanical strength. Electrical connections shall be mechanically secure before and electrically continuous after soldering.

3.4.8 Voltage rating. The RCCB shall have a voltage rating per pole as specified (see 3.1).

3.4.9 Continuous current carrying capacity. The RCCB shall be capable of carrying the rated current as specified (see 3.1).

3.5 Dielectric withstanding voltage. When tested as specified in 4.6.2, the RCCB shall show no evidence of damage, arcing, or breakdown. The leakage current shall not exceed 0.5 milliamperes.

3.6 Insulation resistance. When tested as specified in 4.6.3, the RCCB shall have an insulation resistance of not less than 100 megohms.

TABLE I. Tripping times for calibration tests.

Calibration tests	Percent rated current	Ambient temperature °C ±5°C	Tripping time
Minimum ultimate trip 1/ 2/ Maximum ultimate trip 1/	115 138	+25	No trip 3/ 1 hour max
Overload and trip-free	200 400 1000	At -54, +25, and +71	(see 3.1)
Ambient effect on calibration (ultimate trip limits)	115 160	-54	No trip 3/ 1 hour max
	100 138	+71	No trip 3/ 1 hour max
Unbalanced overload 4/	200 400 1000	+25	Within maximum and 10% of minimum trip time limits (see 3.1)

1/ See 6.5.5 and 6.5.6.
2/ Temperature rise of the terminals shall not exceed 75°C during testing.
3/ Test time shall be 1 hour, minimum.
4/ Triple pole RCCB's only.

3.7 Calibration. When tested as specified in 4.6.4.1 (qualification or periodic inspection) or 4.6.4.2 (group A inspection), the tripping time (see 6.5.1) shall be as specified (see 3.1 and table I). All poles of triple pole RCCB's shall trip under all "must trip" conditions.

3.8 Voltage drop. The voltage drop across the auxiliary contact terminals shall not exceed .250 volt. When tested as specified in 4.6.5, the voltage drop across the line and load terminals of the RCCB shall not exceed the following limits per pole:

Rating (amperes)	Initial measurement	After endurance
5	.450	.50
7.5	.360	.40
10	.347	.385
15-100	.225	.250

3.9 Response time. When tested as specified in 4.6.6, the RCCB shall open within the specified time (see 3.1).

3.10 Power requirements and response time at minimum voltage. When tested as specified in 4.6.7a, b, and c, respectively, the RCCB shall:

a. Minimum opening voltage: Open automatically.

b. Standby current drain and actuation current: Not to exceed 10 milliamperes dc and 20 milliamperes ac standby current. The opening and closing current shall not exceed the value specified (see 3.1).

c. Maximum operating time at minimum voltage: Open or close the main contacts within a maximum of 50 milliseconds after the corresponding opening or closing of the I/CU.

3.11 Overload cycling. When tested as specified in 4.6.8, the RCCB shall meet the 200 percent overload calibration requirement (see 3.7) during cycling; after cycling, the RCCB shall meet the minimum and maximum ultimate trip requirements (see 3.7).

3.12 Endurance. When tested as specified in 4.6.9, the RCCB shall not fail and shall show no evidence of mechanical damage or loosening of parts.

3.12.1 Electrical operation. In addition, the RCCB shall calibrate within the limits of 90 percent of the specified minimum ultimate trip current and 110 percent of the specified maximum ultimate trip current (see 3.7) and shall meet the voltage drop requirement (see 3.8).

3.13 Terminal strength. When tested as specified in 4.6.10, the RCCB shall show no evidence of short-circuiting, breakage, loosening, bending, stripping of threads, or rotation of terminals, as applicable, and no damage to the circuit breaker body around the terminals.

3.14 Vibration. When tested as specified in 4.6.11, the RCCB main contacts shall not trip and there shall be no opening of the closed nor closing of the open main or auxiliary contacts in excess of 10 microseconds, nor shall there be any evidence of mechanical or electrical damage. The RCCB shall also meet the 200 percent overload calibration requirement (see 3.7).

3.14.1 Vibration scan. When tested as specified in 4.6.11.1 or 4.6.11.2, the RCCB main contacts shall not trip, and there shall be no opening of the closed nor closing of the open main or auxiliary contacts in excess of 10 microseconds, nor shall there be any evidence of mechanical or electrical damage. The RCCB shall also meet the 200 percent overload calibration requirements when tested at 25°C, mounted in the y-axis upon completion of the scan.

3.15 Moisture resistance. When tested as specified in 4.6.12, the RCCB shall show no evidence of breaking, cracking, spalling, excessive corrosion, or loosening of terminals. The RCCB shall also meet the following requirements when tested at 25°C:

a. 1000 percent overload calibration. The RCCB must trip within ±20 percent of the specified limits (see 3.7).

b. 400 percent trip-free calibration. The RCCB must trip within ±20 percent of the specified limits (see 3.7) and meet the trip free requirement (see 3.27).

c. 200 percent overload calibration. The RCCB must trip within ±10 percent of the specified limits (see 3.7).

d. Dielectric withstanding voltage (see 3.5).

3.16 Thermal shock. When tested as specified in 4.6.13, the RCCB shall show no evidence of mechanical damage.

3.17 Shock (specified pulse). When tested as specified in 4.6.14, the RCCB main contacts shall not trip. There shall be no closing of the open main or auxiliary contacts, nor opening of the closed main or auxiliary contacts in excess of 10 microseconds, nor shall there be any evidence of mechanical or electrical damage. The RCCB shall also meet the 200 percent overload calibration requirements (see 3.7).

3.18 Coordination. When tested as specified in 4.6.15, the RCCB with the higher rating shall not open, the RCCB with the lower rating shall open, and there shall be no electrical or mechanical malfunction.

3.19 Electromagnetic interference. When tested as specified in 4.6.16, the RCCB shall meet the requirements for Aircraft, Army, Navy, and Air Force of MIL-STD-461.

3.20 Transient susceptibility. When tested as specified in 4.6.17, the RCCB shall not electrically or mechanically malfunction.

3.21 Explosion. When tested as specified in 4.6.18, the RCCB shall not ignite the explosive mixture outside the RCCB.

3.22 Sand and dust. When tested as specified in 4.6.19, the RCCB shall meet the 400 percent trip-free calibration requirement. The RCCB shall also trip within ±20 percent of the specified limits for 200 percent overload calibration (see 3.7).

3.23 Salt atmosphere (corrosion). When tested as specified in 4.6.20, the RCCB shall show no evidence of excessive corrosion, warping, cracking, or other damage. The RCCB shall also trip within ±20 percent of the specified limits for 200 percent overload calibration (see 3.7).

3.24 Interrupting capacity. When tested as specified in 4.6.21, the RCCB shall trip automatically and provide indication by tripping the I/CU. The RCCB shall be resettable within 10 minutes after each test. The RCCB shall also meet the following requirements:

a. Dielectric withstanding voltage (see 3.5).

b. 200 percent overload calibration. The RCCB must trip within ±20 percent of the specified limits (see 3.7).

3.25 Resistance to solvents. When RCCB's are tested as specified in 4.6.22, the marking shall remain legible.

3.26 Operation. When tested as specified in 4.6.23, the following conditions shall result for each corresponding subparagraph.

a. Paragraphs a through e: RCCB main contacts shall close when the I/CU is closed and open when the I/CU is opened.

b. Paragraph f: RCCB main contacts shall remain open.

c. Paragraph g: RCCB main contacts shall close.

3.27 Trip-free calibration. When tested as specified in 4.6.24, the RCCB shall open, but not reclose in on the overload current or be capable of resetting until the ground is removed and reconnected.

3.28 High temperature cycling. When the RCCB is cycled as specified in 4.6.25, the main contacts shall close and remain closed, and open and remain open when the I/CU is closed and opened.

3.29 Marking (see 3.1).

3.29.1 Identification marking. The following information shall be marked on the RCCB in accordance with method I of MIL-STD-1285:

a. Part number (see3.1).

b. Current rating, voltage, and operating frequency (see 3.1.

c. Contractor's name, trademark, or code and date code.

d. Circuit schematic (see 3.1).

3.29.2 Other marking. The "on" position of integral actuators (see 3.4.4.1); the line and load terminals; the terminal identification on the TJS; the pole identification, when specified (see 3.1); the position indication; and when specified (see 3.1), "ac only" shall be clearly and permanently marked on each RCCB, as specified (see 3.1).

3.30 Recycled, recovered, environmentally preferable, or biobased materials. Recycled, recovered, environmentally preferable, or biobased materials should be used to the maximum extent possible, provided that the material meets or exceeds the operational and maintenance requirements, and promotes economically advantageous life cycle costs.

3.31 Workmanship. RCCB's shall be processed in such a manner as to be uniform in quality and shall be free from cracked or displaced parts, sharp edges, burrs and other defects that will affect life or serviceability.

4. VERIFICATION

4.1 Classification of inspections. The inspections and testing of RCCB's shall be classified as follows:

a. Qualification inspection (see 4.4).
b. Verification of qualification (see 4.4.5).
c. Conformance inspection (see 4.5).
d. Periodic inspection (see 4.5.2).

4.2 Test equipment and inspection facilities. The manufacturer shall establish and maintain a calibration system in accordance with ISO/IEC 17025, ISO 10012, or equivalent system as approved by the qualifying activity.

4.3 Inspection conditions. Unless otherwise specified, all inspections shall be performed in accordance with the test conditions specified in the "GENERAL REQUIREMENTS" of MIL-STD-202.

4.3.1 Power Supply. Unless otherwise specified herein, the power supply shall have no more than 10 percent regulation at twice the specified load current. A dc power supply shall have no more than 5 percent voltage ripple. An ac power supply shall be within 1 percent of the specified frequency and shall be sinusoidal with a form factor between 0.95 and 1.25. The ac or dc power supply shall be capable of simulating the normal and abnormal power conditions described in MIL-STD-704, with the following exceptions:

4.3.1.1 AC power exception. The steady state voltage shall be 104 to 122 volts.

4.3.1.2 DC power exception. The steady state voltage shall be 18 to 32 volts.

4.4 Qualification inspection. Qualification inspection shall be performed at a laboratory acceptable to the Government (see 6.3) on sample units produced with equipment and procedures normally used in production.

4.4.1 Sample size. Unless otherwise specified (see 3.1), 20 sample RCCB's for each specification sheet for which qualification is sought, shall be submitted for testing in accordance with table II. If qualification is sought for less than the entire family of ratings, the total qualification lot size shall be kept at 20 samples to insure coverage of all test conditions specified in table II. No failures shall be allowed in the 20 sample units.

4.4.2 Inspection routine. The sample units shall be subjected to the inspections specified in table II, in the order shown. A new sample unit may be chosen to avoid conducting interrupting capacity and coordination tests on the same unit. If a new sample is chosen, it shall be used for the coordination test with calibration in accordance with 4.6.4 and 3.7 performed before and after the coordination test. In the event less than 13 current ratings are being qualified, 20 sample units are still required. The additional sample units shall be of the highest current rating being qualified.

4.4.3 Failures. One or more failures shall be cause for refusal to grant qualification approval.

4.4.4 Extent of qualification. Qualification of RCCB's with auxiliary contacts will also grant qualification to RCCB's that are identical without auxiliary contacts.

4.4.5 Verification of qualification. To retain qualification, the contractor shall provide verification to the qualifying activity for the following items every 36 months, unless otherwise specified:

a. Design of the circuit breaker has not changed.

b. Verification that the conformance inspections have been performed on inspection lots supplied to the requirements of this specification. The inspections shall consist of the examinations and tests specified in table III and table V. (see 4.5.1.1.1 and 4.5.2.1).

c. Verification, every 36 months, that the group C periodic inspections have been performed as applicable (see 4.5.2.2). The inspections shall consist of the examinations and tests specified in table VI, in the order shown. If test results indicate nonconformance with specification requirements, and corrective action acceptable to the qualifying activity has not been taken, action may be taken to remove the failing product from the QPL.

In the event that no production has occurred in this period, the contractor shall still verify to the qualifying activity that the capacity to manufacture and test QPL RCCB's still exists and that the contractor wants to remain on the QPL.

4.5 Conformance inspection.

4.5.1 Inspection of product for delivery. Inspection of product for delivery shall consist of group A inspection.

4.5.1.1 Inspection lot. An inspection lot shall consist of all the RCCB's covered by a single specification sheet produced under essentially the same conditions within a period not to exceed 1 month, and offered for inspection at one time.

4.5.1.1.1 Group A inspection. Group A inspection shall consist of the inspections specified in table III.

4.5.1.1.1.1. Sampling plan. Group A inspection shall be on an inspection lot basis. Samples shall be selected in accordance with table IV, based on the inspection lot. If there are one or more failures, the inspection lot shall be considered to have failed.

4.5.1.1.2 Rejected lots. If an inspection lot is rejected, the supplier may rework the lot to correct the defects or 100 percent inspect the lot and remove all defective parts. Reworked lots shall be resubmitted for inspection. Such lots shall be separated from new lots and shall be clearly identified as reinspected lots. If one or more defects are found in this second sample, the lot shall be rejected and shall not be supplied to this specification.

4.5.1.1.3 Disposition of sample units. Sample units which have passed all the group A inspection may be delivered on the contract or order if the lot is accepted and the sample units are still within specified electrical tolerances.

4.5.2 Periodic inspection. Periodic inspection shall consist of groups B and C. Except where the results of these inspections show noncompliance with the applicable requirements (see 4.5.2.2.3), delivery of products which have passed group A shall not be delayed pending the results of these periodic inspections.

4.5.2.1 Group B inspection. Group B inspection shall consist of the inspections specified in table V, in the order shown. Group B inspection shall be made on sample units selected from inspection lots which have passed group A inspection.

TABLE II. Qualification inspection.

Inspection	Requirement paragraph	Method paragraph	5	7.5	10	15	20	25	35	40	50	60
			1	2	3	4	5	6	7	8	9	10
Visual and mechanical inspection 1/	3.1, 3.3 to 3.4.9 incl., 3.29, and 3.30		Top line above represents RCCB current rating and second line represents the test sample number.									
		4.6.1	1	1	1	1	1	1	1	1	1	1
Dielectric withstanding voltage	3.5	4.6.2	2	2	2	2	2	2	2	2	2	2
Insulation resistance	3.6	4.6.3	3	3	3	3	3	3	3	3	3	3
Calibration	3.7	4.6.4.1	4	4	4	4	4	4	4	4	4	4
Voltage drop	3.8	4.6.5	6	5	6	5	5	6	5	5	6	5
Response time	3.9	4.6.6	7				6					
Power requirements and response time at minimum voltage	3.10	4.6.7	8								7	
Overload cycling	3.11	4.6.8										
Endurance 2/ 3/	3.12	4.6.9										
AC resistive	3.12	4.6.9.1a										
DC resistive	3.12	4.6.9.2a										
AC motor load	3.12	4.6.9.1c										
DC motor load	3.12	4.6.9.2c										
AC inductive	3.12	4.6.9.1b										
DC inductive	3.12	4.6.9.2b										
Lamp load ac or dc 4/ 5/	3.12	4.6.9.1d or 4.6.9.2d										
Terminal strength	3.13	4.6.10	9									6
Vibration	3.14	4.6.11			7						8	
Moisture resistance	3.15	4.6.12					10					
Thermal shock	3.16	4.6.13		7			8	7				
Shock	3.17	4.6.14				6	9					
Coordination	3.18	4.6.15	5		5			5			5	
Electromagnetic interference	3.19	4.6.16							6			
Transient susceptibility	3.20	4.6.17								6		
Explosion	3.21	4.6.18							7			
Sand and dust	3.22	4.6.19				7						
Salt atmosphere	3.23	4.6.20										
Interrupting capacity 3/	3.24	4.6.21										
AC capacity A/G	3.24	4.6.21	10									7
AC capacity B/H	3.24	4.6.21		6								
DC capacity C	3.24	4.6.21				8						
DC capacity D	3.24	4.6.21					7					
AC capacity E	3.24	4.6.21						8				
DC capacity F	3.24	4.6.21								7		
Resistance to solvents	3.25	4.6.22	11	8	9							
Operation	3.26	4.6.23								8		
Trip-free calibration	3.27	4.6.24								9		

See footnotes at end of table.

TABLE II. Qualification inspection - Continued.

Inspection	Requirement paragraph	Method paragraph	75	80	100 amperes or highest rating being qualified							
			11	12	13	14	15	16	17	18	19	20
Visual and mechanical inspection 1/	3.1, 3.3 to 3.4.9 incl., 3.29, and 3.30		Top line above represents RCCB current rating and second line represents the test sample number.									
		4.6.1	1	1	1	1	1	1	1	1	1	1
Dielectric withstanding voltage	3.5	4.6.2	2	2	2	2	2	2	2	2	2	2
Insulation resistance	3.6	4.6.3	3	3	3	3	3	3	3	3	3	3
Calibration	3.7	4.6.4.1	4	4	4							4
Voltage drop	3.8	4.6.5	5	5	5	4	4	4	4	4	4	5
Response time	3.9	4.6.6										
Power requirements and response time at minimum voltage	3.10	4.6.7			6							
Overload cycling	3.11	4.6.8	6									
Endurance 2/ 3/	3.12	4.6.9										
AC resistive	3.12	4.6.9.1a			7							
DC resistive	3.12	4.6.9.2a				5						
AC motor load	3.12	4.6.9.1c					5					
DC motor load	3.12	4.6.9.2c						5				
AC inductive	3.12	4.6.9.1b							5			
DC inductive	3.12	4.6.9.2b								5		
Lamp load ac or dc 4/ 5/	3.12	4.6.9.1d or 4.6.9.2d									5	
Terminal strength	3.13	4.6.10										
Vibration	3.14	4.6.11		6								
Moisture resistance	3.15	4.6.12										
Thermal shock	3.16	4.6.13				7						
Shock	3.17	4.6.14										7
Coordination	3.18	4.6.15										6
Electromagnetic interference	3.19	4.6.16										
Transient susceptibility	3.20	4.6.17										
Explosion	3.21	4.6.18	7									
Sand and dust	3.22	4.6.19										
Salt atmosphere	3.23	4.6.20		8								
Interrupting capacity 3/	3.24	4.6.21										
AC capacity A/G	3.24	4.6.21										
AC capacity B/H	3.24	4.6.21	8									
DC capacity C	3.24	4.6.21		7								
DC capacity D	3.24	4.6.21			8							
AC capacity E	3.24	4.6.21										8
DC capacity F	3.24	4.6.21				6						
Resistance to solvents	3.25	4.6.22										
Operation	3.26	4.6.23										
Trip-free calibration	3.27	4.6.24										

1/ Dimensional measurement shall be made on two sample units only.
2/ In the event of any design change between the lowest and highest rated circuit breaker, other than the tripping element, modifications to this table may be required. Contact the qualifying activity.
3/ For three phase RCCB's, dc tests are not required.
4/ This test may be waived if the highest lamp load rating is at 50 amperes and a 100-ampere rated device is tested for motor load.
5/ For single phase RCCB's, perform dc lamp load tests and for three phase RCCB's, perform ac lamp load.

TABLE III. Group A inspection.

Inspection	Requirement paragraph	Method paragraph
Group I		
Visual and mechanical inspection:		
Dimensions 1/	3.4	4.6.1
Workmanship	3.30	4.6.1
Dielectric withstanding voltage	3.5	4.6.2
Insulation resistance	3.6	4.6.3
Voltage drop	3.8	4.6.5
Group II		
Visual and mechanical inspection:		
Marking	3.29	4.6.1
Calibration	3.7	4.6.4.2
High temperature cycling 2/	3.28	4.6.25

1/ Dimensional measurements shall be made on two units only.
2/ If the contractor can demonstrate that this test has been performed for three consecutive periods with zero failures, this test, with the approval of the qualifying activity, can be performed as part of the Group B testing. This test to be performed prior to the dielectric withstanding voltage test in table V.

TABLE IV. Group A, zero defect sampling plan.

Lot size	Sample size
1 - 13	100 percent
14 - 150	13
151 - 280	20
281 - 500	29
501 - 1,200	34
1,201 - 3,200	42
3,200 - 10,000	50
10,001 - 35,000	60
35,001 - 150,000	74
150,001 - 500,000	90
500,001 and up	102

TABLE V. Group B inspection.

Inspection	Requirement paragraph	Test paragraph
Dielectric withstanding voltage	3.5	4.6.2
Insulation resistance	3.6	4.6.3
Overload calibration 1/	3.7	4.6.4.1c
Voltage drop	3.8	4.6.5
Endurance 2/	3.12	4.6.9
Vibration scan 3/	3.14.1	4.6.11.1

1/ Overload calibration shall be run at 200 percent and 1000 percent only at 25°C ±5°C. Each time this test is run, a different axis shall be used.
2/ Endurance testing shall be run on a rotational basis, i.e., switch between ac and dc resistive, motor and inductive loads.
3/ Upon completion of the vibration scan the device shall meet the 200 percent overload calibration requirement when tested at 25°C, mounted in the y-axis, except that a +15 percent allowance will be made on the trip time.

4.5.2.1.1 Sampling plan. One RCCB shall be selected after 100 units have been produced in a quarter. If production exceeds 1000 units in a quarter, one RCCB shall be selected from each subsequent 1000 units. If no RCCB's are selected in one year based on the above, two units will be selected at the end of that year. If these two units represent more than 1 percent of production, testing is not required. The endurance and vibration scan testing specified in table V shall only be carried out on the highest ampere rated device selected. The sampling plan as specified, shall be based on the number of all devices which are similar.

4.5.2.1.2 Failure criteria. When one or more RCCB's fail to pass group B inspection, further acceptance shall be withheld until the cause of failure is determined. In the event of a single isolated failure on group B testing, and if the failed RCCB has satisfactorily completed 50 percent of the specified minimum cycles on the particular load being tested, the manufacturer, at his option, may have two additional RCCB's selected for the same group B testing. If the two RCCB's pass, the lot shall be accepted, and production and testing resumed. In the event of an additional failure on the two samples, acceptance shall be withheld and corrective action will be necessary. After corrective action has been taken, production and acceptance testing may be resumed. For production reasons, group A tests may be continued pending the investigation of group B failure.

4.5.2.1.3 Extent of group B inspection. The group B inspection of RCCBs with auxiliary contacts will also grant group B inspection to RCCBs that are identical without auxiliary contacts.

4.5.2.1.4 Disposition of sample units. Sample units which have been subjected to group B inspection shall not be delivered on the contract.

4.5.2.2 Group C inspection. Group C inspection shall consist of the inspections specified in table VI, in the order shown. Group C inspection shall be made on sample units selected from lots which have passed group A inspection.

4.5.2.2.1 Sampling plan. Fourteen sample units shall be selected from those covered by a single specification sheet, 36 months after the date of notification of qualification, and after each subsequent 36 month period. The sample units shall consist of one sample per current rating manufactured, except that for the highest current rating manufactured, two samples shall be chosen. If all current ratings are not manufactured, tests which are scheduled for these devices must be run on RCCB's which are manufactured, or on the highest current rated device if additional units are needed to complete the tests. A test plan showing these exceptions must be submitted to the qualifying activity prior to the start of testing. The endurance testing shall be run at the highest ampere rating being qualified. The various types of endurance tests (resistive, inductive, motor and lamp loads) shall be covered on a rotating basis, i.e., for each 3-year retention of qualification period, a different type of endurance test shall be performed. If there is no production of RCCB's covered by a single specification sheet within a 36 month period, the qualifying activity shall be notified, and the sample units for group C inspection shall be selected and tested from the first inspection thereafter.

TABLE VI. Group C inspection.

Inspection	Requirement paragraph	Method paragraph	5	7.5	10	15	20	25	35
			1	2	3	4	5	6	7
Visual and mechanical inspection 1/	3.1, 3.3 to 3.4.9 incl., 3.29, and 3.30	. 4.6.1	Top line above represents RCCB current rating and second line represents the test sample number						
			1	1	1	1	1	1	1
Dielectric withstanding voltage	3.5	4.6.2	2	2	2	2	2	2	2
Insulation resistance	3.6	4.6.3	3	3	3	3	3	3	3
Calibration 2/	3.7	4.6.4.1d	4	4	4	4	4	4	4
Voltage drop	3.8	4.6.5	5	5	5	5	5	5	5
Overload cycling	3.11	4.6.8							
Endurance cycling 3/	3.12	4.6.9							
AC resistive load	3.12	4.6.9.1a							
DC resistive load	3.12	4.6.9.2a							
AC inductive load	3.12	4.6.9.1b							
DC inductive load	3.12	4.6.9.2b							
AC motor load	3.12	4.6.9.1c							
DC motor load	3.12	4.6.9.2c							
Lamp load ac or dc 4/	3.12	4.6.9.1d or 4.6.9.2d							
Terminal strength	3.13	4.6.10	7						
Vibration	3.14.1	4.6.11.2			7				
Moisture resistance	3.15	4.6.12							
Interrupting capacity 3/	3.24	4.6.21							
AC capacity A/G	3.24	4.6.21		6		6			
AC capacity B/H	3.24	4.6.21	6						
DC capacity C	3.24	4.6.21			6				
DC capacity D	3.24	4.6.21							6
AC capacity E	3.24	4.6.21					6		
DC capacity F	3.24	4.6.21						6	
Thermal shock	3.16	4.6.13							

See footnotes at end of table.

TABLE VI. Group C inspection - Continued.

Inspection	Requirement paragraph	Method paragraph	40	50	60	75	80	100	100
			8	9	10	11	12	13	14
Visual and mechanical inspection 1/	3.1, 3.3 to 3.4.9 incl., 3.29, and 3.30	4.6.1	Top line above represents RCCB current rating and second line represents the test sample number. 1	1	1	1	1	1	1
Dielectric withstanding voltage	3.5	4.6.2	2	2	2	2	2	2	2
Insulation resistance	3.6	4.6.3	3	3	3	3	3	3	3
Calibration 2/	3.7	4.6.4.1d	4	4	4	4	4	4	4
Voltage drop	3.8	4.6.5	5	5	5	5	5	5	5
Overload cycling	3.11	4.6.8						6	
Endurance cycling 3/	3.12	4.6.9							6 5/
AC resistive load	3.12	4.6.9.1a							
DC resistive load	3.12	4.6.9.2a							
AC inductive load	3.12	4.6.9.1b							
DC inductive load	3.12	4.6.9.2b							
AC motor load	3.12	4.6.9.1c							
DC motor load	3.12	4.6.9.2c							
Lamp load ac or dc 4/	3.12	4.6.9.1d or 4.6.9.2d							
Terminal strength	3.13	4.6.10							
Vibration	3.14.1	4.6.11.2							
Moisture resistance	3.15	4.6.12			7				
Interrupting capacity 3/	3.24	4.6.21							
AC capacity A/G	3.24	4.6.21						7	
AC capacity B/H	3.24	4.6.21	6						
DC capacity C	3.24	4.6.21		6					
DC capacity D	3.24	4.6.21			6				
AC capacity E	3.24	4.6.21				6			
DC capacity F	3.24	4.6.21					6		
Thermal shock	3.16	4.6.13	7						

1/ Dimensional measurements are to be made on two samples only.
2/ For overload calibration, testing shall be run at 200 percent and 1000 percent at -54°C and +71°C. All calibration testing shall be run in only one axis.
3/ For three phase RCCB's, dc tests are not required.
4/ This test may be waved if the highest lamp load rating is at 50 amperes and a 100 ampere rated device is tested for motor load.
5/ This test is performed on a rotating basis, see 4.5.2.2.1.

4.5.2.2.2 Disposition of sample units. Sample units which have been subjected to group C inspection shall not be delivered on the contract.

4.5.2.2.3 Noncompliance. If a sample fails to pass group B or C inspection, the manufacturer shall notify the qualifying activity and the cognizant inspection activity of such failure and take corrective action on the parts, materials, or processes, as warranted, and on all units of the product which can be corrected and which were manufactured with essentially the same parts, materials, and processes, and which are considered subject to the same failure. Acceptance and shipment of the product shall be discontinued until corrective action, acceptable to the qualifying activity has been taken. After corrective action has been taken, group B or C inspections shall be repeated on additional sample units (all inspections, or the inspection which the original sample failed, at the option of the qualifying activity). Group A inspection may be reinstated; however, final acceptance and shipment shall be withheld until the group B or C inspections have shown that the corrective action was successful. In the event of failure after reinspection, information concerning the failure shall be furnished to the cognizant inspection activity and the qualifying activity.

4.6 Methods of inspection and test.

4.6.1 Visual and mechanical inspection. RCCB's shall be inspected to verify that dissimilar metals, interface, physical dimensions, marking, and workmanship are in accordance with the applicable requirements (see 3.1, 3.3 to 3.4.9 inclusive, 3.29 and 3.30).

4.6.2 Dielectric withstanding voltage (see 3.5). RCCB's shall be tested in accordance with MIL-STD-202-301. The following details shall apply:

a. Magnitude of test voltage: 1500 volts (rms) for all applications except 1000 volts (rms) when testing is across open auxiliary contacts.

b. Nature of potential: AC.

c. Points of application: Between mutually insulated parts. NOTE: The control terminals and the line terminal(s) are electrically interconnected through a solid state module and must be shorted together during test.

d. Measurement during test: Leakage current.

e. Inspections after test: RCCB's shall be inspected for evidence of flashover, mechanical damage, arcing, breakdown and excessive current flow.

4.6.3 Insulation resistance (see 3.6). RCCB's shall be tested in accordance with MIL-STD-202-302. The following details shall apply:

a. Test condition: B.

b. Points of measurement: Between mutually insulated parts. NOTE: The control terminals and the line terminal(s) are electrically interconnected through a solid state module and must be shorted together during test.

4.6.4 Calibration (see 3.7). RCCB's shall be connected as shown in figure 1 and subjected to the applicable calibration tests specified in 4.6.4.1 or 4.6.4.2. For triple pole RCCB's, each pole (remaining poles passing no current) and all poles shall be subjected to the test current specified.

4.6.4.1 Qualification and periodic inspection.

a. Minimum limit of ultimate trip: The RCCB shall be subjected to an overload of 115 percent of rated current at 25°C ±5°C for a minimum of 1 hour and the tripping time shall be measured. The temperature rise of the RCCB terminals shall be obtained by the use of a suitable thermocouple attached to the terminals outside, but adjacent to the RCCB case.

b. Maximum limit of ultimate trip: The RCCB shall be subjected to an overload of 138 percent of rated current at 25°C ±5°C and the tripping time shall be measured.

c. Overload calibration: The RCCB shall be subjected to overloads of 200, 400, and 1000 percent of rated current at -54°C ±5C, 25°C ±5°C and 71°C ±5°C, and the tripping times shall be measured. During this test, the RCCB shall be tested with each major axis held in the vertical plane and in any other position likely to cause malfunctioning.

d. Ambient effect on calibration: The RCCB shall be subjected to overloads of 115 and 160 percent of rated current at -54°C ±5°C, 100 and 138 percent of rated current at 71°C ±5°C, and the tripping times shall be measured. At 100 and 115 percent of rated current, the current shall be applied for a minimum of 1 hour.

4.6.4.2 Group A inspection.

a. Minimum limit of ultimate trip: The RCCB shall be subjected to an overload of 115 percent of rated current at 25°C ±5°C on all poles for a minimum of 1 hour and the unit must not trip (see table I). At the manufacturer's option, this test may be substituted for by another minimum limit of ultimate trip test when a correlation between the two test methods can be substantiated to the satisfaction of the qualifying activity.

b. Maximum limit of ultimate trip: The RCCB shall be subjected to an overload of 138 percent of rated current at 25°C ±5°C, and it must trip within 1 hour (see table I).

c. Overload calibration: The RCCB shall be subjected to an overload of 200 percent of rated current at 25°C ±5°C and the tripping times for each pole shall be measured (see table I or 3.1).

4.6.5 Voltage drop (see 3.8). RCCB's shall break and then make rated current for 10 consecutive operations prior to measurement. With the RCCB carrying rated current, the voltage drop from the line terminal(s) to the load terminal(s) shall be measured. The voltage drop across the auxiliary contacts shall be measured at the terminals of the terminal junction system using the pin contact specified (see 3.4.5.2), or equivalent.

4.6.6 Response time (see 3.9). RCCB's shall be closed and carrying rated current. The power shall be removed and the I/CU opened. The power shall be reapplied and the opening time of the RCCB measured.

4.6.7 Power requirements and response time at minimum voltage (see 3.10).

a. Minimum opening voltage: With the RCCB stabilized at -54°C ±5°C, 25°C ±5°C, and 71°C ±5°C and the I/CU closed, monitor main contact position and apply power and an overload such that with 2½ volts (dc or ac, 400 Hz) (see 3.1) at the line terminal(s), the RCCB should open automatically. No back-up power shall be applied.

b. Standby current drain and actuation current: With the RCCB stabilized at room temperature, apply the specified back-up voltage (see 3.1) to the appropriate TJS terminal. Close the I/CU and measure the standby current drain, remove back-up power and repeat measurement after applying the specified line voltage (see 3.1); then open and close the I/CU and monitor the actuating current at each voltage.

c. Maximum operating time at minimum voltage: With no back-up power and the minimum specified voltage (see 3.1) at the line terminal(s), "open" then "close" the I/CU and measure the corresponding opening and closing times of the RCCB main contacts.

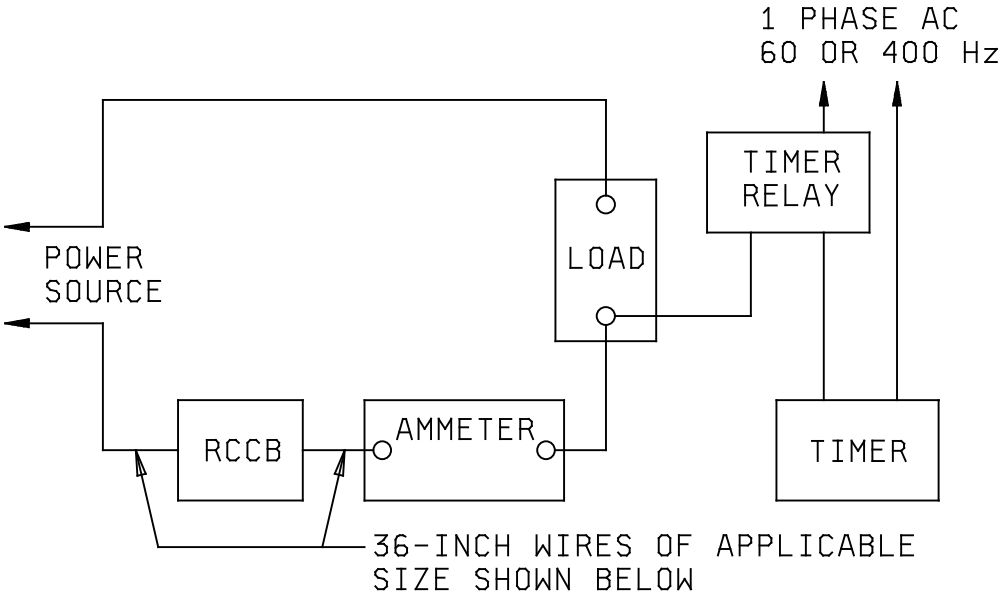

Circuit breaker capacity (amperes)	Wire size AWG
5	22
7 to 10 inclusive	18
11 to 15 inclusive	16
16 to 20 inclusive	14
21 to 25 inclusive	12
26 to 40 inclusive	10
41 to 50 inclusive	8
51 to 60 inclusive	8
61 to 90 inclusive	6
91 to 120 inclusive	4

NOTES:

1. Test lead wires and terminals shall be selected to enable the calibration tests to meet the intended requirements of this specification.

FIGURE 1. Suggested calibration test circuit.

4.6.8 Overload cycling (see 3.11). RCCB's shall be subjected to a 200 percent rated current resistive load for 100 cycles of normal openings and the tripping times shall be measured. This test shall be conducted at rated voltage and, unless otherwise specified (see 3.1), at a cycling rate of 2 to 3 minutes per operation. Following this test, RCCB's shall be subjected to the minimum and maximum ultimate trip calibration tests specified in 4.6.4. Triple pole RCCB's are to carry minimum and maximum ultimate trip currents on all three poles simultaneously.

4.6.9 Endurance (see 3.12). RCCB's shall be subjected to the number of cycles of make and break operation specified (see 3.1), with the RCCB's energized at rated current, voltage, and frequency (see 3.1, 4.6.9.1, and 4.6.9.2) throughout the cycling period with a duty cycle specified in table VII. All poles of triple pole RCCB's shall be simultaneously subjected to the required load. Auxiliary contacts shall also make and break the specified load (see 3.1 and 3.4.5.2).

(NOTE: Non-operate events will not be considered test failures. Non-operate events are to be defined as a failure of the device to close and latch the primary contacts in the relay mode. This type event shall be constrained to less than one percent per thousand cycles and cannot occur on consecutive cycles. Additionally, less than one hundred non-operate events will be tolerated over the endurance cycling period.)

The same type of load shall be applied to the auxiliary contacts as is applied to the main contacts, except when the motor load is applied to the RCCB, the auxiliary contacts shall be subjected to the inductive load. Electrical operation of the RCCB shall be by use of the I/CU or other contact in series with the I/CU. RCCB's shall be inspected for evidence of mechanical damage or loosening of parts. Following the test, RCCB's shall be subjected to the following tests:

a. Minimum ultimate trip calibration (see 4.6.4): Triple pole RCCB's are to carry minimum and maximum ultimate trip currents on all three poles simultaneously.

b. Maximum ultimate trip calibration (see 4.6.4): Triple pole RCCB's are to carry minimum and maximum ultimate trip currents on all three poles simultaneously.

c. Voltage drop (see 3.8).

TABLE VII. Duty cycle for endurance tests (seconds).

Resistance ac or dc		Inductive ac or dc		Motor 1/ ac or dc		Lamp 2/ ac or dc	
ON	OFF	ON	OFF	ON	OFF	ON	OFF
3.0 ±.5	3.0 ±.5	1.0 ±.05	4.0 ±.1	.5 ±.09	4.5 ±.1	2 ±.05	15 ±2

1/ Duration of the specified inrush current shall be 0.07 ±0.02 second, after which it shall be reduced to its rated motor load for the remainder of the "ON" period.
2/ Duration of the specified inrush current shall be 0.015-0.020 second, after which it shall be reduced to its rated lamp load for the remainder of the "ON" period.

4.6.9.1 AC loads. During the ac endurance tests, the voltage shall be 120 ±5 volts and the frequency shall be 400 ±20 Hz.

a. Resistive load: Testing shall be accomplished at rated load with a power factor between .9 and unity.

b. Inductive load: Testing shall be accomplished at rated load with a 0.7 ±0.05 lagging power factor.

c. Motor load: The RCCB shall make five times rated load and break rated load.

d. Lamp load: Lamp operation shall make 12 times rated load and break rated load.

4.6.9.2 DC loads. During the dc endurance tests, the voltage shall be 30 ±2 volts.

a. Resistive load: Resistive operation shall be accomplished at rated load.

b. Inductive load: Inductive operation shall be accomplished at rated load. Inductive dc load shall use iron core inductors as specified in 4.6.9.2.1 and 4.6.9.2.2. Inductors shall be used in parallel as necessary to meet or exceed rated load.

c. Motor load: The RCCB shall make six times rated load and break rated load.

d. Lamp load: Lamp operation shall make 12 times rated load and break rated load.

4.6.9.2.1 Type I DC inductor (main CB circuit). Terminal to terminal resistance shall be 0.277 Ohms ±10%. When calibrated or tested at 28 ±0.5 VDC, the current versus time curve obtained upon closing the inductor circuit with a suitable switching device whose contact-bounce duration shall be less than 1 millisecond shall be within the limits shown in Figure 2 for 5.0 ±0.5 amperes steady-state current and within the limits shown in Figure 3 for 25.0 ±0.5 amperes steady-state current. An alternate method of selecting DC inductors can be found in Appendix B.

4.6.9.2.2 Type II DC inductor (auxiliary switch circuit). Terminal to terminal resistance shall be 8.15 Ohms ±10%. When calibrated or tested at 28 ±0.5 VDC, using 1 ampere steady-state current, the current shall reach 95 percent of the steady-state point (3L/R) in 135 ±5 milliseconds.

4.6.10 Terminal strength (see 3.13). RCCB's shall be tested in accordance with MIL-STD-202-211. The following details and exceptions shall apply:

a. Test conditions: A and E. The tensile load specified in table VIII shall be applied to each terminal and to the mounting nut in the X and Y axis (see figure 4) for a period of 1 minute; then the torque value specified in table VIII shall be applied in a clockwise direction to the nut or screw head about the thread axis for a period of 1 minute.

b. Inspection after test: Verify compliance with 3.13.

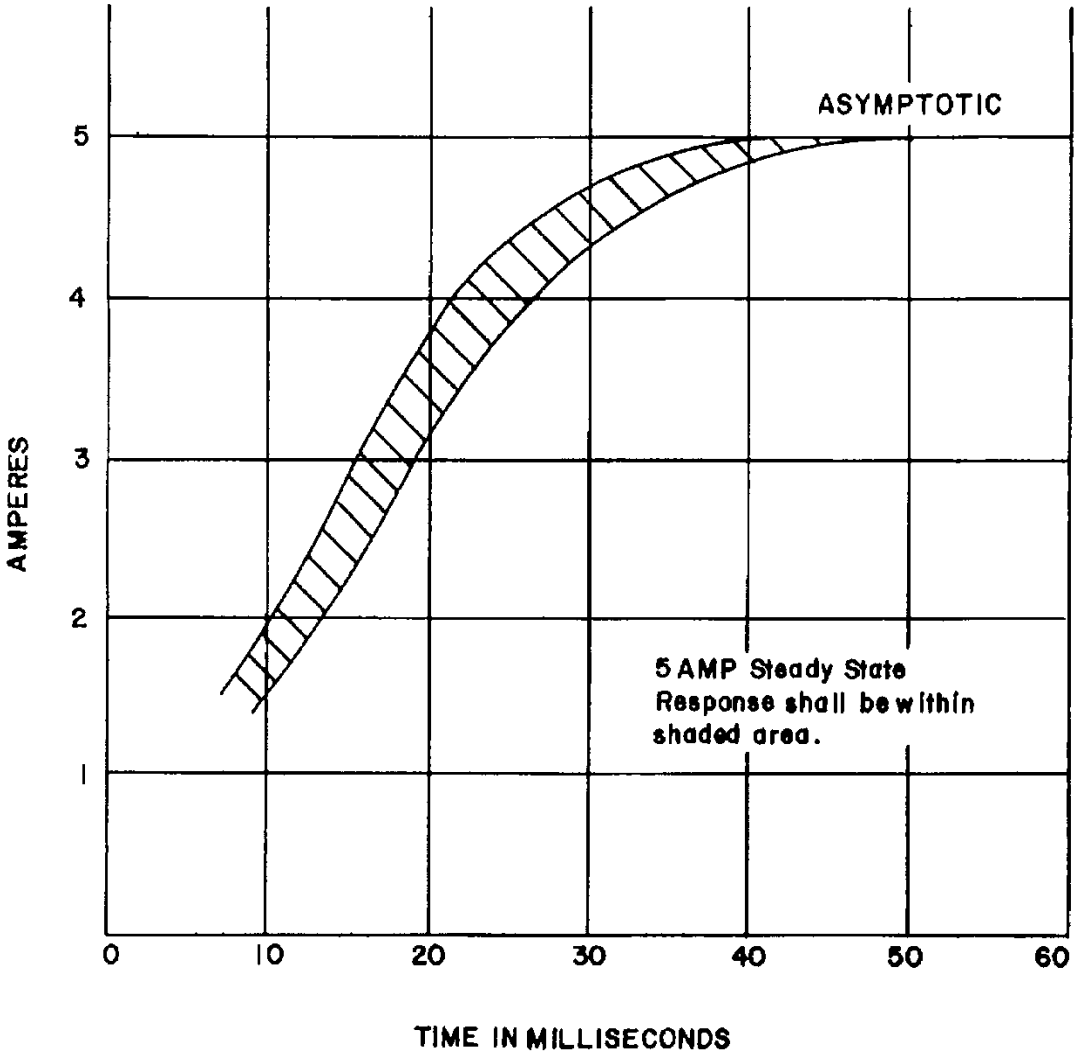

FIGURE 2. Response (current vs time) Type I inductors only.

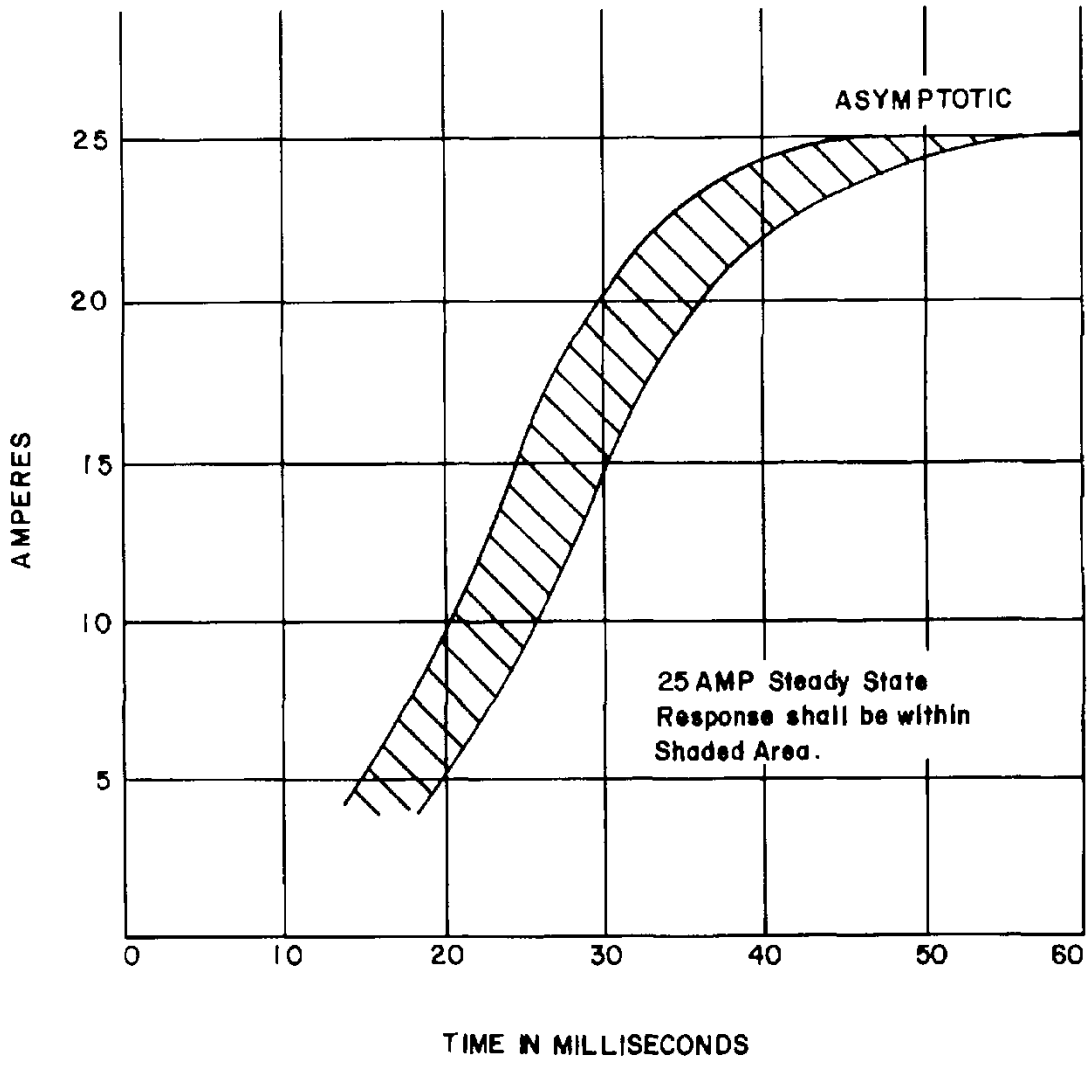

FIGURE 3. Response (current vs time) Type I inductors only.

TABLE VIII. Terminal strength forces.

Stud or screw size (inch)	Tensile load (pounds)	Design torque (inch-pounds)	Recommended installation torque (inch-pounds)
.190	30	30	18
.250	30	60	36

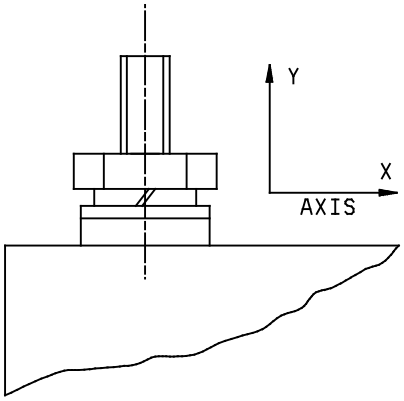

FIGURE 4. Terminal strength test.

4.6.11 Vibration (see 3.14). RCCB's shall be tested in accordance with MIL-STD-202-204. The following details and exceptions shall apply:

a. Mounting: Normal mounting means.

b. Temperature: Each test shall be repeated three times, once at 25°C ±5°C, and at the applicable high and low operating temperatures (see 3.1).

c. Electrical load conditions: One of the RCCB's shall be tested in the open position. The remainder of the RCCB's shall be tested in the closed position carrying no current and then with all poles carrying rated current (90 percent rated current at high temperature) during and 30 minutes prior to testing.

d. Test condition: C.

e. Measurements during vibration: When testing with contacts carrying current, monitor for trip indication only. When testing without rated current, RCCB's shall be monitored as specified in test condition A, test circuit B, MIL-STD-202-310 or similar to determine opening of closed main contacts (and auxiliary contacts, as applicable) and closing of open main contacts (and auxiliary contacts, as applicable). The following exceptions shall apply:

    1. The open circuit voltage is 28 Vdc maximum.
    2. The applied current is a maximum of 10% of the rated current.

f. Inspection after vibration: RCCB's shall be inspected for evidence of mechanical and electrical damage and shall be subjected to the 200 percent overload calibration test (triple pole RCCB's shall be subjected to 200 percent overload on all three poles simultaneously at 25°C) (see 4.6.4).

4.6.11.1 Vibration scan for group B inspection (see 3.14.1). Vibration testing shall consist of two scans of the vibration levels specified for MIL-STD-202-204, test condition C. Both scans shall be performed at 25°C. The scans shall consist of:

a. The RCCB closed and carrying rated current to check for trip.

b. The RCCB open to check for contact closures in excess of 10×10^{-6} seconds.

Each time the test is run, the RCCB shall be mounted in a different axis from the previous test.

4.6.11.2 Vibration scan for group C inspection (see 3.14.1). Vibration testing shall consist of two scans of the vibration levels specified for MIL-STD-202-204, test condition C. The scans shall consist of:

a. The RCCB closed and carrying rated current (90 percent of rated current at +71°C only) to check for trip.

b. The RCCB open to check for contact closures in excess of 10×10^{-6} seconds.

The RCCB shall be vibrated in this manner in each of the three mutually perpendicular axes. Each time group C inspection is run, a different ambient temperature shall be used (i.e., -54°C the first time, +25°C the second time, and +71°C the third, then repeat cycle).

4.6.12 Moisture resistance (see 3.15). RCCB's shall be tested in accordance with MIL-STD-202-106. The following details and exceptions shall apply:

a. Initial measurement: Not applicable.

b. Electrical load conditions: RCCB's shall be closed with no power applied.

c. Step 7b: Vibration is not required.

d. Final measurements: On removal from the chamber, the RCCB may be manually shaken or swabbed to remove external surface water and then permitted to stabilize at room temperature for 45 minutes. RCCB's shall be subjected to the following series of tests:

(1) 1000 percent overload calibration at 25°C (see 4.6.4).

(2) Stabilize for 1 hour at room temperature.

(3) Trip-free calibration at 25°C (see 4.6.24) except use 400 percent overload.

(4) Stabilize for 2 hours at room temperature.

(5) 200 percent overload calibration at 25°C (see 4.6.4).

(6) Stabilize for 4 hours at room temperature.

(7) Dielectric withstanding voltage (see 4.6.2).

4.6.13 Thermal shock (see 3.16). RCCB's shall be tested in accordance with MIL-STD-202-107. The following details and exceptions shall apply:

a. Test condition: A-1 (except that cycling shall be continuous and the high temperature shall be 71°C ±5°C).

b. Inspection after cycling: RCCB's shall be inspected for evidence of mechanical damage.

4.6.14 Shock (specified pulse) (see 3.17). RCCB's shall be tested in accordance with MIL-STD-202-213. The following details shall apply:

a. Mounting method: Normal mounting means.

b. Test condition: J (except peak value shall be 25 g's).

c. Electrical load conditions: The RCCB shall be subjected to three separate shocks in each of two directions in each of the three principle axes for each of the following conditions:

(1) With the RCCB in the closed position and carrying rated current for 30 minutes prior to and during the test.

(2) With the RCCB in the closed position with no load.

(3) With the RCCB in the open position.

d. Measurements during shock: When testing with contacts carrying rated current, monitor for false trip only. When testing without current, RCCB's shall be monitored as specified in test condition A, test circuit B, MIL-STD-202-310 or similar to determine opening of closed main contacts (and auxiliary contacts, as applicable) and closing of open main contacts (and auxiliary contacts, as applicable).

e. Inspection after shock: RCCB's shall be inspected for evidence of mechanical and electrical damage and shall be subjected to the 200 percent overload calibration test (triple pole RCCB's shall be subjected to 200 percent overload on all three poles simultaneously at 25°C) (see 4.6.4).

4.6.15 Coordination (see 3.18). RCCB's shall be tested in two phases as specified below to verify compliance with 3.18.

a. Coordination at overload conditions: The pairs of RCCB's specified in table IX shall be connected in series and subjected to overloads of 400, 1000, and 2000 percent of the current rating of the lower rated RCCB.

b. Coordination at interrupt currents: The pairs of RCCB's specified in table IX shall be connected in series and subjected to the maximum interrupt current for the applicable voltage rating. The test for each combination shall consist of applying the fault current three successive times with a minimum period of 10 minutes allowed between applications of current.

TABLE IX. Coordination test pairs.

Lower rating (amperes)	Higher rating (amperes)
5	10
10	20
25	50
50	100

4.6.16 Electromagnetic interference (see 3.19). RCCB's shall be tested in accordance with MIL-STD-461 as follows:

CS114 - (induced level: 49.0dBuA - 89.0dBuA from 10kHz - 1MHz; 89.0dBuA - 89.0dBuA from 1MHz - 30MHz; 89.0dBuA - 81.0dBuA from 30MHz - 200MHz; ref. MIL-STD-461 Fig. CS114-1, Curve 3).

RE102 - (radiated level at 1 m: 34dBuV/m at 2MHz - 100MHz; 34dBuV/m at 100MHz logarithmically rising to 54dBuV/m at 1GHz; ref. MIL-STD-461, Fig. RE102-3).

RS103 - (field intensity: 20V/m 2MHz to 1GHz).

The RCCB must be tested in each of the following four modes of operation:

Main contacts open (I/CU open) with rated AC voltage,
Main contacts closed (I/CU closed) with rated AC voltage and current,
Main contacts open (I/CU open) with rated DC voltage,
Main contacts closed (I/CU closed) with rated DC voltage and current.

The RCCB shall remain in the state which reflects the state of the I/CU; the RCCB shall not change state during any test.

4.6.17 Transient susceptibility (see 3.20). RCCB'S shall be subjected to a discharge across the line and load terminals from a 1 microfarad capacitor charged to 600 volts. This shall be done when the RCCB is in the closed position carrying rated current and in the open position. A 50-ohm resistor shall be connected in series with the capacitor to act as a source impedance during the discharge cycle. The line source impedance may not exceed 50 ohms. This procedure shall be repeated four times within 1 minute with the capacitor connected in one polarity and then repeated four times within 1 minute with the capacitor connected in the opposite polarity.

4.6.18 Explosion (see 3.21). RCCB's shall be tested in accordance with MIL-STD-202-109. The following details and exceptions shall apply:

a. Mounting method: Normal mounting means.

b. Electrical loading: RCCB's shall be energized with rated voltage and current and be operated for 30 operations.

c. Testing: The test shall be conducted at sea level only and all sample units may be tested together in the explosion chamber.

4.6.19 Sand and dust (see 3.22). RCCB's shall be tested in accordance with MIL-STD-202-110. The following details shall apply:

a. Mounting method: RCCB's shall be mounted by normal means on a dummy panel.

b. Test condition: A.

c. Electrical loading: RCCB's shall be in the set position.

d. Measurements: RCCB's shall be subjected to the 400 percent trip-free calibration test and the 200 percent overload calibration test at 25°C (triple pole RCCB's shall carry 200 percent overload on all three poles simultaneously) (see 4.6.4).

4.6.20 Salt atmosphere (corrosion) (see 3.23). RCCB's shall be tested in accordance with MIL-STD-202-101. The following details shall apply:

a. Test condition: B.

b. Measurements after exposure: Within 10 minutes after the test, the RCCB shall be washed for at least 5 minutes with running water not warmer than 37.8°C accompanied by a slight brushing and dried for 6 hours in a forced-air oven at approximately 57°C. RCCB's shall be subjected to and shall satisfactorily clear a 200 percent of rated current overload and shall then be subjected to the 200 percent overload calibration test at room ambient temperature (see 4.6.4) (triple pole RCCB's shall carry 200 percent overload on all three poles simultaneously).

4.6.21 Interrupt capacity (see 3.24). For the interrupting capacity tests, the RCCB shall be so connected to the power source that the currents specified (see table X) are provided at the RCCB terminals. The test circuit of figure 5 shall be used. The open circuit voltage before application of the interrupting current and the open circuit recovery voltage shall be the value specified in table X. Oscillographic records of current, voltage, and time shall be obtained. The RCCB shall be subjected to the interrupting capacity tests in table X as specified (see 3.1) and shall close on and open with the interrupting currents and voltages specified. After each interruption, the open circuit voltage specified in table X shall be maintained across the RCCB for a minimum of 5 seconds. There shall be sufficient time to permit proper cooling and reset between each cycle of operation. Under no circumstances shall an interrupting test be repeated within 5 minutes of the previous test.

Following the last operation of each test, the RCCB at room ambient temperature shall be subjected to the dielectric withstanding voltage test (see 4.6.2) and the 200 percent overload calibration test (see 4.6.4); triple pole RCCB's shall carry 200 percent overload on all three poles simultaneously. Each pole of triple pole RCCB's in turn shall be subjected to this test while the other poles are carrying rated current. For triple pole RCCB's, one operation shall be performed for each test altitude specified. Upon completion, the RCCB shall again be subjected to this test while each of the poles are simultaneously carrying 60 +10, 0 percent of the single phase fault current specified (see 3.1).

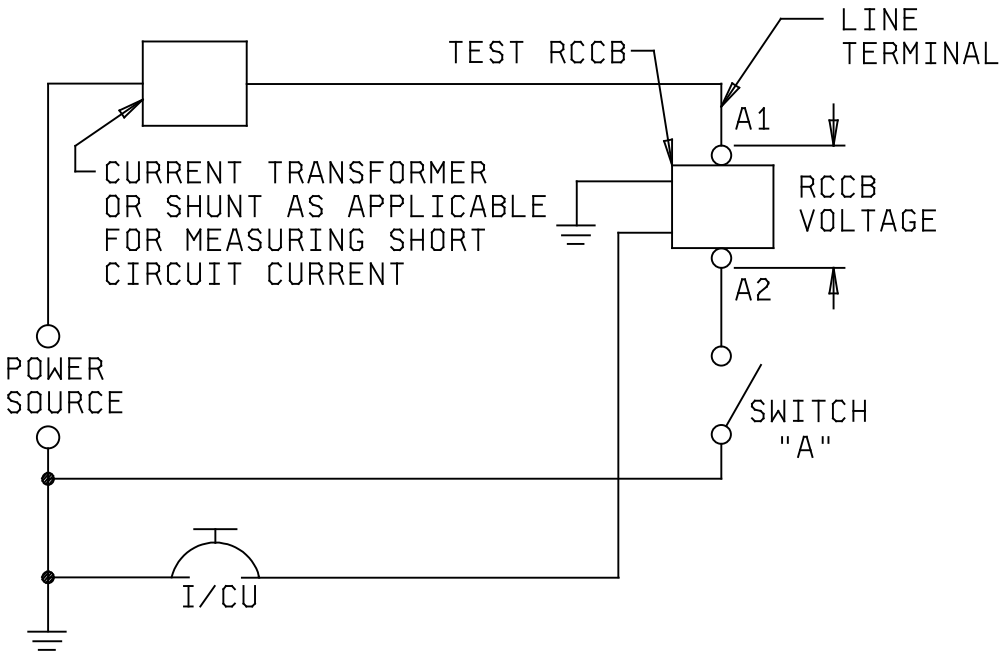

AC or dc short interrupt test

Connect terminals A1 and A2 together and close switch "A".
Adjust the current to the specified value (see table X).
Open switch "A" and connect the RCCB between terminals A1 and A2.
Close the I/CU (thereby closing the RCCB).
Close switch "A".

AC or dc close-in interrupt test

Connect terminals A1 and A2 together and close switch "A".
Adjust the current to the specified value (see table X).
Open switch "A" and connect the RCCB between terminals A1 and A2.
Open the I/CU (RCCB open).
Close switch "A".
Close the I/CU (thereby closing the RCCB).

NOTE: Interrupt current shall be measured by a current transformer or shunt as indicated and suitable recording oscillograph. The voltage across the RCCB shall be recorded simultaneously with interrupt current and at the point indicated.

FIGURE 5. Suggested interrupting capacity test circuit.

TABLE X. Interrupting capacity test procedure.

Test designation	Test description 1/	Operations 2/	System	Open circuit voltage (volts)	Calibrated fault current (amperes)	Transient rms voltage after calibrated fault current interrupt (volts)
A	Available current short circuit interruption (ac)	2 CO at sea level 2 CO at 50,000 feet	'Y' connected 400 Hz 115/200 volts	120 ±5	Current specified (see 3.1) in 10 to 25 cycles after fault initiation. Power factor .4 to .5 lagging	120 within 3 cycles 150 within 6 cycles 165 maximum
B	Available current close-in interruption (ac)	2 OCO at sea level 2 OCO at 50,000 feet				
C	Available current short circuit interruption (dc)	2 CO at sea level 2 CO at 50,000 feet	28 Vdc	30 ±2	Current specified (see 3.1) in 0.01 to 0.03 second after fault initiation	28 within 0.002 second 50 maximum
D	Available current close-in interruption (dc)	2 OCO at sea level 2 OCO at 50,000 feet				
E	Instantly available intermediate current interruption (ac)	1 CO at 50,000 feet 3/ 1 OCO at sea level 3/	'Y' connected 400 Hz 115/200 volts	120 ±5	2000% 1000% 750% 500%	120 within 3 cycles 165 maximum
F	Instantly available Intermediate current interruption (dc)	1 CO at 50,000 feet 3/ 1 OCO at sea level 3/	28 Vdc	30 ±2		28 within 0.002 second 50 maximum
G	Available current short circuit (ac) for 3-pole RCCB's only	1 CO at sea level 1 CO at 50,000 feet	115/200 volts	Single phase 120 ±5	10 to 25 cycles after fault initiation. Power factor .4 to .5 lagging	120 within 3 cycles 150 within 6 cycles 165 maximum
		1 CO at sea level		3-phase		205 within 3 cycles 280 maximum
H	Available current close-in interruption (ac) for 3-pole RCCB's only	1 OCO at sea level 1 OCO at 50,000 feet		Single phase 120 ±5		120 within 3 cycles 150 within 6 cycles 165 maximum
		1 OCO at sea level 1 OCO at 50,000 feet		3-phase 205 ±5		205 within 3 cycles 255 within 6 cycles 280 maximum

1/ See 6.5.7, 6.5.8, and 6.5.9.
2/ CO is an operation in which the RCCB is closed before initiation of the fault. OCO is an operation in which the fault is initiated, and the RCCB is closed to complete the fault.
3/ For each value of fault current specified.

4.6.22 Resistance to solvents (see 3.25). RCCB's shall be tested in accordance with MIL-STD-202-215. The following details and exceptions shall apply:

a. Portion to be brushed; All marking areas.

b. Solvent solutions: The solvent solutions used in this test shall be in accordance with table XI.

TABLE XI. Resistance to solvents.

Solvent	Test fluid	Solvent	Test fluid
1	MIL-PRF-7808	7	Solvent (a) specified in: MIL-STD-202-215
2	MIL-PRF-23699	8	Solvent (c) specified in: MIL-STD-202-215
3	SAE-AS1241 (Stoddard Petroleum Solvent)		
4	SAE-AMS1424 (or ethylene glycol)		
5	MIL-PRF-87937 (diluted for cleaning)	9	MIL-PRF-5606
6	MIL-DTL-5624	10	MIL-PRF-83282

4.6.23 Operation. Power shall be applied to the RCCB and operated by the I/CU as specified below. The main contact shall be continuously monitored for operation as specified in 3.26.

Applicable to ac-dc RCCB's:

a. Apply 115 volts, 400 Hz to single pole and 200 volts line to line 400 Hz, 3 phase grounded neutral to three pole RCCB line terminals and 28 V dc to back-up terminals, then manually close and open the I/CU.

b. Remove line power then manually close and open the I/CU.

c. Reapply line power and remove back-up power, then manually close and open the I/CU.

d. Single pole RCCB's only: Apply 28 V dc to line terminal and 115 volts, 400 Hz to back-up terminal, then manually close and open the I/CU.

e. Three pole RCCB's only: Disconnect back-up power and connect 115 volts, 400 Hz to one phase then manually close and open the I/CU.

f. Remove all power, then manually close the I/CU.

g. Reapply all power.

Applicable to ac RCCB's:

Perform test as specified in a. through g. above, except use the same voltage and phase for both line and back-up power.

4.6.24 Trip-free calibration (see 3.27). With the I/CU terminal connected directly to the ground, the RCCB shall be subjected to the maximum limit of ultimate trip calibration test. The ground shall remain connected for a minimum of 10 minutes after tripping of the RCCB occurs.

4.6.25 High temperature cycling (see 3.28). (Group A inspection only, see table III). The RCCB shall be maintained at 71°C ±5°C for 1 hour. The RCCB shall then be closed and opened fifty times via the I/CU at a rate of 3 ±.5 seconds. Mechanical closing and opening of the RCCB shall be monitored via the main contacts.

5. PACKAGING

5.1 Packaging. For acquisition purposes, the packaging requirements shall be as specified in the contract or order (see 6.2). When packaging of material is to be performed by DoD personnel, these personnel need to contact the responsible packaging activity to ascertain packaging requirements. Packaging requirements are maintained by the Inventory Control Point's packaging activities within the Military Service or Defense Agency, or within the Military Department's Systems Command. Packaging information retrieval is available from the managing Military Department's or Defense Agency's automated packaging files, CD-ROM products, or by contacting the responsible packaging activity.

6. NOTES

(This section contains information of a general or explanatory nature that may be helpful, but is not mandatory.)

6.1 Intended use. The RCCB's covered by this specification are military unique due to the fact that these devices must be able to operate satisfactorily in military systems under the following demanding conditions: 10 G's of vibration, 25 G's of shock, 48 hours of salt spray, and an ambient explosive atmosphere. In addition these military requirements are verified under a qualification system. Commercial components are not designed to withstand these military environmental conditions.

6.2. Acquisition requirements. Acquisition documents should specify the following:

a. Title, number, date of the specification, applicable specification sheet, and the complete military or contractor's type or part number, as applicable (including the CAGE).

b. The specific issue of individual documents referenced, if required. If not otherwise specified, the versions of the individual documents referenced will be those in effect on the date of release of the solicitation (see 2.1).

c. Packaging requirements (see 5.1).

6.3 Qualification. With respect to products requiring qualification, awards will be made only for products which are, at the time of award of contract, qualified for inclusion in Qualified Products List whether or not such products have actually been so listed by that date. The attention of the contractors is called to these requirements, and manufacturers are urged to arrange to have the products that they propose to offer to the Federal Government tested for qualification in order that they may be eligible to be awarded contracts or orders for the products covered by this specification. Information pertaining to qualification of products may be obtained from the Defense Supply Center Columbus (DLA Land and Maritime-VQH), 3990 East Broad Street, Columbus, OH 43218-3990, https://landandmaritimeapps.dla.milOffices/Sourcing_and_Qualification/default.aspx.

6.3.1 Provisions governing qualification. Copies of SD-6, "Provisions Governing Qualification" may be obtained online at https://quicksearch.dla.mil/.

6.4 Materials.

6.4.1 Plastics. It is suggested that ASTM D5948 be used as guidance only when using plastic materials which may be exposed to arcing or surface creepage.

6.4.2 Fungus resistance. It is suggested that guideline 4 of MIL-HDBK-454 be used for guidance only in dealing with fungus resistance.

6.4.3 Solder and solder flux. It is suggested that IPC-J-STD-006 be used for guidance only in dealing with solder and IPC-J-STD-004 be used for guidance only in dealing with soldering flux.

6.4.4 Intermetallic contact. The finishing of metallic areas to be placed in intimate contact by assembly presents a special problem, since intermetallic contact of dissimilar metals results in electrolytic couples that promote corrosion through galvanic action. To provide the required corrosion protection, intermetallic couples should be selected to meet the performance requirements of this specification.

6.4.5 Tin whisker growth. The use of alloys with tin content greater than 97 percent, by mass, may exhibit tin whisker growth problems after manufacture. Tin whiskers may occur anytime from a day to years after manufacture and can develop under typical operating conditions, on products that use such materials. Conformal coatings applied over top of a whisker-prone surface will not prevent the formation of tin whiskers. Alloys of 3 percent lead, by mass, have shown to inhibit the growth of tin whiskers. For additional information on this matter, refer to ASTM B545 (Standard Specification for Electrodeposited Coatings of Tin).

6.5 Definitions. For the purpose of this specification, the following definitions apply.

6.5.1 Tripping time (see 3.4.3 and 3.7). Tripping time is the total interval of elapsed time from the instant of applying a given overcurrent to the RCCB to the completion of the interruption of the circuit.

6.5.2 Tripping time delay (see 3.4.3). Tripping time delay is the delay factor purposely designed into the tripping time of an RCCB.

6.5.3 Line terminal (see 3.4.5.1). The terminal attached to the isolated stationary main contact of the RCCB with the breaker in the open or tripped position is considered the line terminal. If both main contacts of the circuit are isolated, only one terminal is to be designated the line terminal.

6.5.4 Auxiliary contacts (see 3.4.5.2). Auxiliary contacts are those mechanically interlocked with and operated by the main contacts of the RCCB, and intended for use in monitoring circuits for signaling, electrical interlocking, or other purposes.

6.5.5 Ultimate trip current (see 3.7). Ultimate trip current is the smallest value of current that causes tripping of the RCCB under a given set of ambient conditions.

6.5.6 Ultimate trip limits (see 3.7). The specified limits of ultimate trip currents are maximum ultimate trip current and minimum ultimate trip current. At the maximum specified ultimate trip current, the RCCB opens within the specified time, and at the minimum specified ultimate trip current the RCCB does not open.

6.5.7 Available short circuit and close-up interrupt capacity tests. Tests using a voltage regulated circuit in which the calibrated fault current is obtained after the regulator has provided maximum excitation.

6.5.8 Instantly available short circuit and close-in interrupt capacity tests. Tests during which the calibrated fault current is essentially constant from fault application to interruption. This type of test is generally conducted with a fixed excitation power supply.

6.5.9 Instantly available intermediate short circuit close-in interrupt capacity tests. Tests in which the fault current is limited by resistance and is essentially constant from fault application to interruption.

6.5.10 Bimetal. Two metals, each having a different temperature coefficient of expansion, attached together to form a bending motion with a change of temperature.

6.5.11 Discrete semiconductor. Those semiconductor devices having a single functional characteristic; i.e., diode, transistor, SCR, FET, etc., and are acquired in conformance to specified performance criteria.

6.5.12 Monolithic microcircuit (or integrated circuit). A microcircuit consisting exclusively of elements formed on or within a single semiconductor substrate with at least one of the elements formed within the substrate.

6.5.13 Hybrid microcircuit. A microcircuit consisting of elements which are a combination of the film microcircuit type (see 6.5.14) and the semiconductor types (see 6.5.11 and 6.5.12) or a combination of one or both of the types with discrete parts.

6.5.14 Film microcircuit. A microcircuit consisting exclusively of elements which are films formed in-situ upon or within an insulating substrate.

6.6 Warning.

6.6.1 Potential test procedure hazards. Potentially hazardous situations are inherent in some of the test procedures specified in this specification. Precautions should therefore be taken to insure that test personnel are adequately protected and observe the necessary safety measures at all times.

6.6.2 Aircraft and equipment maintenance hazards. The standard safe response time is 12 milliseconds maximum (see 3.9). Presently, all slash sheets have a response time in excess of 12 milliseconds. Extra precautions should be taken to protect maintenance personnel from shock. For example, if maintenance proceeds under power-down conditions and the I/CU lines are being manipulated, maintenance personnel can suddenly be exposed to electrical shock for up to 25 milliseconds if power-up occurs. This exceeds the accepted maximum industry standard of 12 milliseconds.

6.7 Application note. Coordination between devices supplied by different manufacturers should be verified by the user.

6.8 Operating principle. The RCCB is basically the marriage of a relay and a circuit breaker and allows the utilization of each identity singularly or in combination. The RCCB is normally located in the most direct line possible between the source and load. It operates in conjunction with the I/CU which is a small ½ ampere device which can be located convenient to operating personnel. When the RCCB trips from an overload, a current pulse in turn trips the I/CU. To reset the RCCB, the I/CU is manually closed. The I/CU is normally located some distance from the RCCB and connected via light guage wire, thereby eliminating long runs of heavy wire. The line impedance plus the I/CU impedance must not exceed 7.5 ohms. The RCCB can be operated as a relay via the manual operation of the I/CU. Back-up control power can be used to operate the RCCB in the event of loss of main power. NOTE: The I/CU is not furnished with the RCCB.

6.9 Subject (key word) listing.
Coordination
Endurance
Interrupting capacity
TJS
Triple pole

6.10 Amendment notations. The margins of this specification are marked with vertical lines to indicate where modifications from this amendment were made. This was done as a convenience only and the Government assumes no liability whatsoever for any inaccuracies in these notations. Bidders and contractors are cautioned to evaluate the requirements of this document based on the entire content irrespective of the marginal notations.

APPENDIX A

ELECTRONIC COMPONENTS

A. SCOPE

A.1 Scope. This appendix establishes requirements for an electronic component evaluation system for Remote Control Circuit Breakers (RCCB) manufactured in accordance with this specification. The manufacturer shall have a program for assessing the quality and reliability of component parts used in RCCBs. The following system is one way of achieving this requirement. This appendix is a mandatory part of the specification. The information contained herein is intended for compliance.

A.2 APPLICABLE DOCUMENTS

SPECIFICATIONS

DEPARTMENT OF DEFENSE

MIL-PRF-19500 - Semiconductor Devices, General Specification for.

MIL-PRF- 38535 - Integrated Circuits (Microcircuits) Manufacturing, General Specification for.

STANDARDS

DEPARTMENT OF DEFENSE

MIL-STD-883 - Test Methods and Procedures for Microelectronics.

HANDBOOKS

DEPARTMENT OF DEFENSE

MIL-HDBK-454 - General Guidelines for Electronic Equipment.

A.3 REQUIREMENTS

A.3.1 General requirements.

A.3.1.1 Alternative system requirements. The manufacturer has the option to use alternative methods for achieving the general requirements of the component evaluation system specified herein.

A.3.2 Electronic components. It is suggested that MIL-HDBK-454 be used for guidance only in component selection.

A.3.3 Discrete semiconductor devices. Pertinent characteristics (electrical, physical, mechanical, quality, reliability) of the semiconductor devices shall be addressed. JAN, JANTX, JANTXV semiconductors in accordance with MIL-PRF-19500 are preferred. When non-QPL semiconductors are selected, the RCCB manufacturer shall address requirements for assessing the quality and reliability of the component and the component supplier. When assessing the quality and reliability of non-QPL devices, MIL-PRF-19500 should be used as a guide. Non-QPL parts shall be screened by the RCCB manufacturer to the extent which satisfies the performance requirements and product characteristics as specified herein for the RCCB.

APPENDIX A

A.3.4 Microcircuits. Pertinent characteristics (electrical, physical, mechanical, quality, reliability) of the microcircuits shall be addressed. Standard Microcircuit Drawing (SMD) and QML devices (in accordance with MIL-PRF-38535) are preferred. When non-SMD or non-QML devices are selected, a device compliant with applicable requirements of MIL-STD-883 is preferred. When nonstandard microcircuits are selected, the RCCB manufacturer shall address requirements for assessing the quality and reliability of the devices and device supplier. When assessing the quality and reliability of nonstandard microcircuits, the aforementioned military documents should be used as a guide. Non-SMD or non-QML devices shall be screened by the RCCB manufacturer to the extent which satisfies the performance requirements and product characteristics as specified herein for the RCCB.

A.3.5 Electrostatic damage (ESD) protection. Electronic components which are subject to ESD shall be protected against ESD during manufacturing of the RCCB.

A.3.6 Pure tin. The use of pure tin, as an underplate or final finish, is prohibited both internally and externally. Tin content of RCCB components and solder shall not exceed 97 percent, by mass. Tin shall be alloyed with a minimum of 3 percent lead, by mass.

APPENDIX B

DC INDUCTOR CALIBRATION PROCESS

B.1 SCOPE.

B.1.1 Scope. This appendix details the alternate method of selecting inductors to meet the inductive load test (4.6.9.2.1). This appendix is not a mandatory part of this specification. The information contained herein is intended for guidance only.

B.2 INDUCTIVE LOAD, DC

B.2.1 Inductor Classification. Inductors shall be classified into the following two groups based on the nominal steady state current.

B.2.1.1 Group 1. Inductors for use with military circuit breakers with inductive ratings of up to 2 Amps will use an inductor that has been qualified per B.3.1

B.2.1.2 Group 2. Inductors for use with military circuit breakers with inductive ratings from 2 to 25 Amps will use an inductor that has been qualified per B.3.2

B.3 INDUCTOR CALIBRATION PROCESS

B.3.1 Group 1 - Inductive Load Ratings up to 2 Amps

a. Qualifying inductors for use in testing circuit breakers rated up to 2 Amps will be placed into a test circuit where the nominal rise time is 11.035 ±2.18 milliseconds measured at 63.2% of steady state current, or 1 L/R time constant as shown in Response Curve Figure B-1

b. Due to the decreasing tolerance zone of energy storage below 2 Amps, the inductors for this group shall be qualified at 1 Amp. Once qualified with a rise time that falls within the limits specified, it is acceptable to use the inductor for any test state current up to 2 Amps.

B.3.1.1 Calibration Process.

a. Place an inductor, variable resistor, and switching device in series with a 28±0.5VDC power supply.

b. Select a resistance to achieve a circuit current of 1±0.1 Amps.

c. Power shall be applied using a knife switch or other switching device where contact bounce shall be less than 1 millisecond.

d. Insure the power supply will not be limiting the current at or below the specified steady state current.

e. Apply power to the circuit by closing the switch.

f. Monitor current using an oscilloscope.

g. Verify the rise time is between 8.8 and 13.2 milliseconds and steady state current is 1±0.1 Amps. See Response Curve Figure B-1

B.3.1.2 Inductive Load Testing.

a. Test circuit breakers in series with a qualified inductor.

b. If the rise time of the inductor falls within 8.8 and 13.2 milliseconds at 1 Amp, it is qualified to use for any test current up to 2 Amps.

c. Set the current by adjusting the variable resistance to achieve the desired steady state current. Do not alter the inductance. The power supply shall remain at 28 +/- 0.5VDC.

B.3.2 Group 2. Inductive Load Ratings From 2 to 25 Amps

a. Qualifying inductors for use in testing circuit breakers rated from 2 to 25 Amps will be placed into a test circuit where the nominal rise time is 11.035 ±2.18 milliseconds measured at 63.2% of desired steady state current, or 1 L/R time constant. as shown in Response Curve Figure B-1.

B.3.2.1 Calibration Process.

a. Place an inductor, variable resistor, and switching device in series with a 28±0.5VDC power supply.

b. Select a nominal resistance to achieve the desired test current.

c. Select an inductor to achieve a rise time of 11.035 ±2.18 milliseconds measured at 63.2%, or 1 L/R of the desired steady state current.

d. Power shall be applied using a knife switch or other switching device where contact bounce shall be less than 1 millisecond.

e. Insure the power supply will not be limiting the current at or below the desired steady state current.

f. Apply power to the circuit by closing the switch.

g. Monitor current using an oscilloscope.

h. Verify the circuit has achieved the desired steady state current.

i. If the rise time of the inductor falls within 8.8 and 13.2 milliseconds, it is qualified to use for this test current. See Response Curve Figure B-1

k. Tests to be completed at different current levels require the qualification process be repeated in order to determine an acceptable inductor for the desired test current. A single inductor will not be capable of achieving the proper rise time requirement over the entire 2 to 25 Amp range.

B.3.2.2 Inductive Load Testing.

a. Test circuit breakers in series with a qualified inductor.

B.4 Inductor Temperature Rise. The temperature rise of the test inductors should be limited to 55°C in order to maintain stable test currents which will minimize changes to inductor resistance as temperature increases.

B.5 FORMULAS

B.5.1 Stored Energy. Figure B-2 was derived from the following formulas.

a. V = IR (R @ 5A, 28V = 5.6Ω)
b. $(\text{Joules})\ \mathrm{W} = \frac{1}{2}\mathrm{LI}^2$
c. (Rise Time) τ = L/R
d. Stored Energy – Upper & Lower Limits

Upper Limit $(\text{Joules})\ \mathrm{W} = 0.185 * \mathrm{I}$

Lower Limit $(\text{Joules})\ \mathrm{W} = 0.124 * \mathrm{I}$

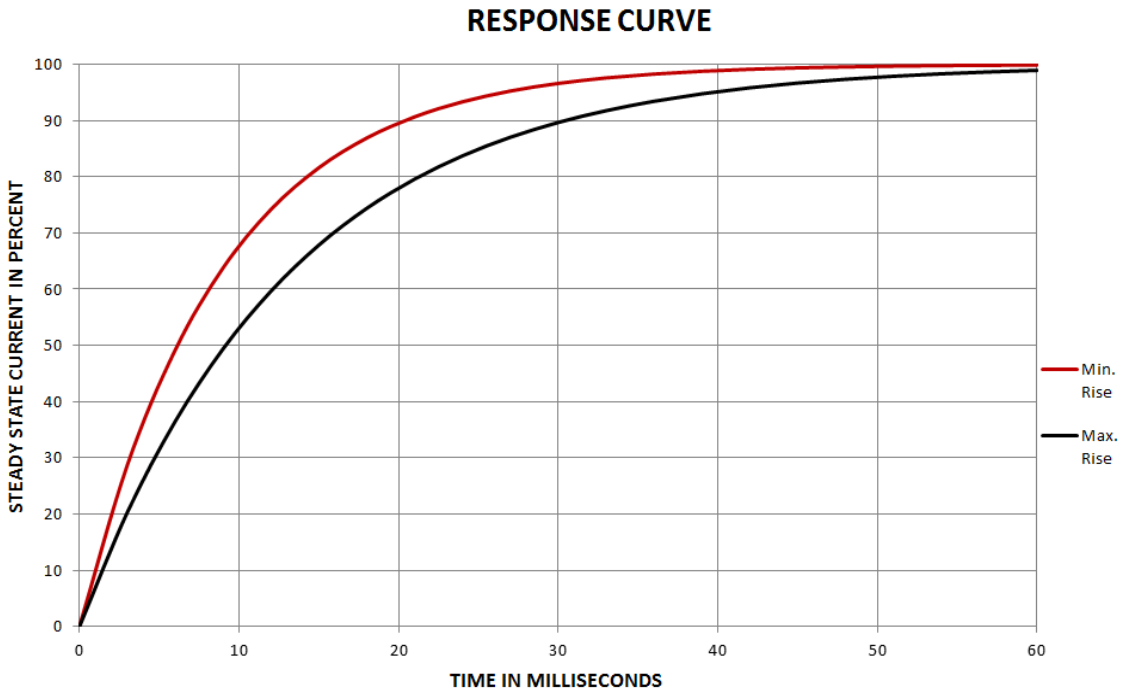

FIGURE B-1 - Response (Current versus Time)

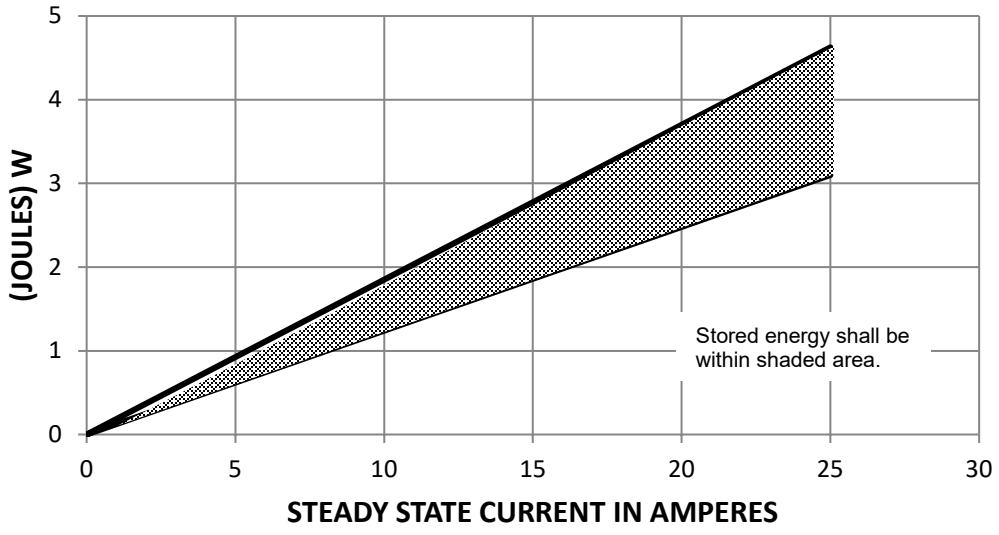

FIGURE B-2. Stored energy (Joules versus Current) type I inductors only.

Custodians:
Army - CR
Navy - AS
Air Force - 85
DLA - CC

Review activities:
Army - AT, AV, CR4, MI

Preparing activity:
DLA - CC

(Project: 5925-2018-011)

NOTE: The activities listed above were interested in this document as of the date of this document. Since organizations and responsibilities can change, you should verify the currency of the information above using the ASSIST Online database at https://assist.dla.mil/.