INCH-POUND

MIL-PRF-64266/32
W/AMENDMENT 1
3 February 2015
MIL-PRF-64266/32
7 April 2014

PERFORMANCE SPECIFICATION SHEET

CONNECTORS, FIBER OPTIC, CIRCULAR, PLUG AND RECEPTACLE STYLE, MULTIPLE REMOVABLE GENDERLESS TERMINI, SCREW THREADS, TEST TERMINUS ADAPTER, PLUG STYLE, FOR USE WITH A CONNECTOR RECEPTACLE

This specification is approved for use by all Departments and Agencies of the Department of Defense.

The requirements for acquiring fiber optic connectors described herein shall consist of this specification sheet and MIL-PRF-64266.

SCOPE. The Measurement Quality Jumper (MQJ) is a fiber optic test jumper or cable that conforms to the low loss optical requirements. The MQJ is used with test equipment including the performance of optical loss measurements using an optical source and power meter and including Optical Time Domain Reflectometer (OTDR) measurements. The MQJ consists of a single fiber cable with a connector at one end which mates to the test equipment (such as an optical source and power meter) and a connector (test terminus) at the other end which mates to the link/segment under test. For mating to a link/segment with a MIL-PRF-64266 multiple termini connector, a test terminus adapter is used to interface with the multiple termini connector plug or the connector receptacle under test. The test terminus adapter contains the insert cavity configuration to mate with and lock a test terminus in place. This specification sheet specifies the test terminus adapter that is a plug style for mating with a connector receptacle. The test terminus that is inserted into the test terminus adapter is specified under MIL-PRF-29504/21.

AMSC N/A

FSC 6060

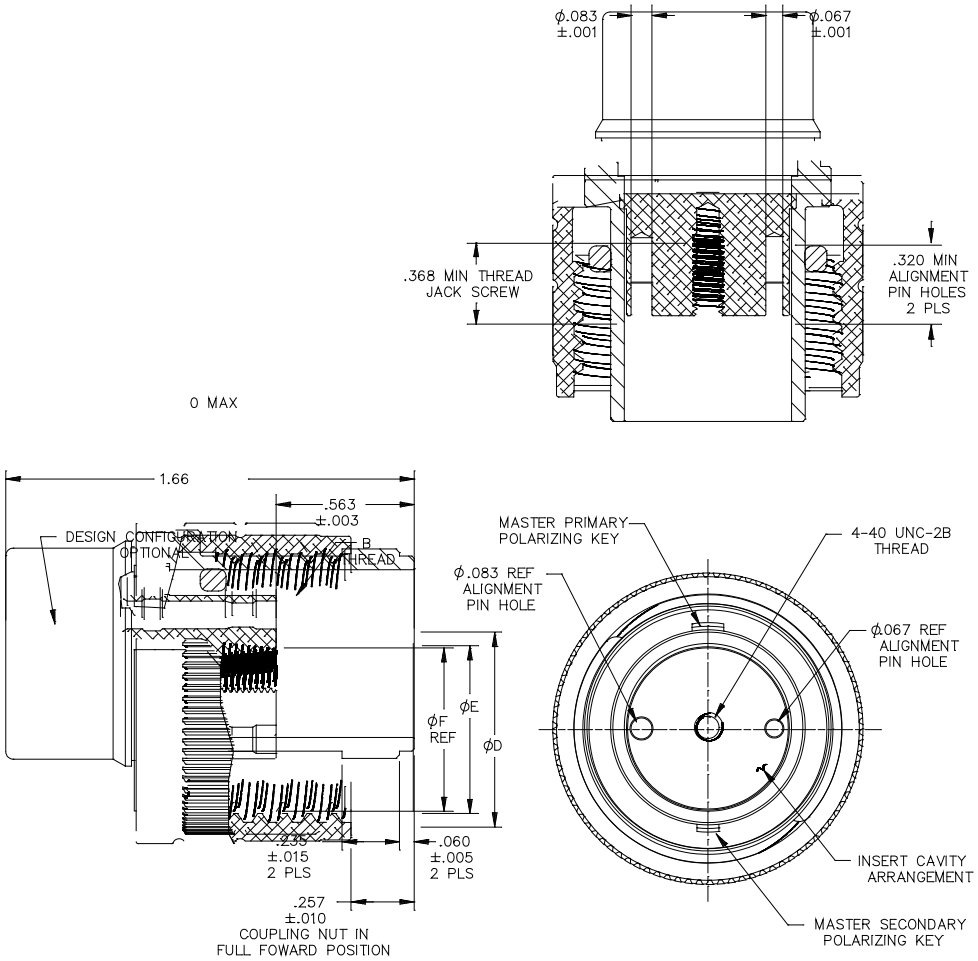

FIGURE 1. Interface dimensions, test terminus adapter, plug, fiber optic.

Shell size	Diameter A		B Thread Class -2B	Diameter D +/- .005		Diameter E +/- .005	
	inch	mm	Blunt Start	inch	mm	inch	mm
11	1.028	26.11	.750-.1P-.2L-DS	.497	12.62	.420	10.67
13	1.141	28.98	.875-.1P-.2L-DS	.621	15.77	.500	12.70
15	1.263	32.08	1.062-.1P-.2L-DS	.793	20.14	.678	17.22
23	1.805	43.31	1.500-.1P-.2L-DS	1.215	30.86	1.084	27.53

Shell size	Diameter F REF		Diameter YP +/- .004	
	inch	mm	inch	mm
11	.410	10.41	.555	14.10
13	.486	12.34	.679	17.25
15	.664	16.87	.851	21.62
23	1.068	27.13	1.271	32.28

NOTES:
1. Dimensions are in inches.
2. Metric equivalents are given for general information only.
3. Dimensions apply to plated/finished part.
4. Test terminus adapter internal configuration not shown. The test terminus adapter interface with the MIL-PRF-64266 connector receptacle shall be in accordance with figure A-2 of MIL-PRF-64266.
5. Test terminus cavity dimensions shall be in accordance with figure 2.
6. Test terminus adapter positions for placing the polarization key shall be in accordance with figure A-3 of MIL-PRF-64266.

FIGURE 1. Interface dimensions, test terminus adapter, plug, fiber optic. - Continued.

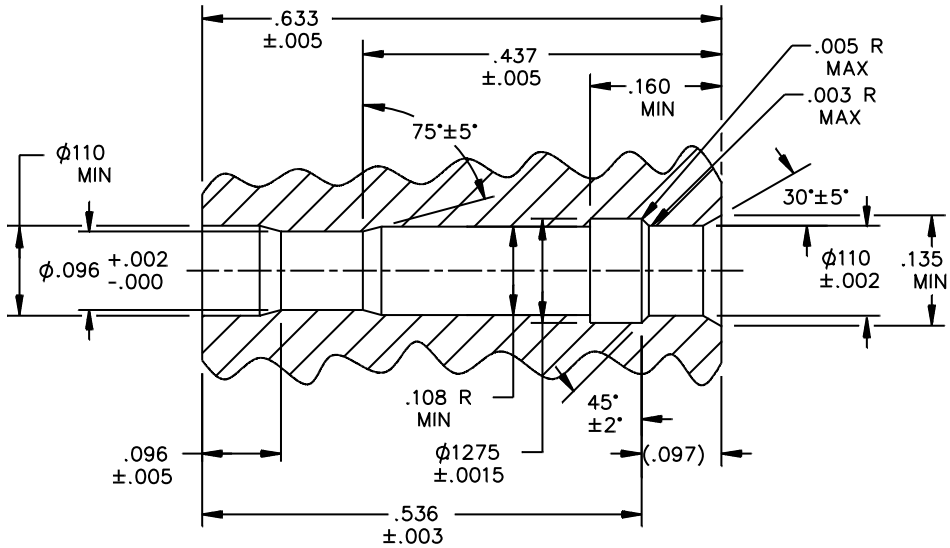

Notes:
1. Dimensions are in inches.
2. Metric equivalents are given for general information only.
3. Dimensions apply to plated/finished part.

FIGURE 2. Test terminus adapter cavity configuration.

REQUIREMENTS:

Temperature ranges: Not Applicable.

Design and construction:

Dimensions and configurations: See figures 1 and 2 herein and MIL-PRF-64266, figure A-2.

Polarization key arrangement: Test terminus adapter shall be configured only for a universal keying. Universal keying shall consist of providing only the master primary polarizing keyway and the master secondary polarizing keyway as shown in figure A-3 of MIL-PRF-64266.

Insert cavity arrangement: Arrangement of the cavities within the test terminus adapter insert shall conform to figure in Appendix B of MIL-PRF-64266, as applicable for the specified shell size with the maximum number of cavities.

Insert cavity keying. Insert cavities shall be keyed and shall conform to the keyway dimensions in figure B-1 of MIL-PRF-64266 and shall conform to the keyway orientations as shown in figure in Appendix B of MIL-PRF-64266, as applicable for the specified shell size.

Alignment sleeve retainer. The test terminus adapter shall not include an alignment sleeve retainer (ASR) as part of this PIN; however, the test terminus adapter shall contain the provisions to allow for insertion of an ASR. For standardization, assume that the connector receptacle always contains the ASR. Placement of the ASR into this test terminus adapter is considered redundant. The ASR shall conform to MIL-PRF-64266/9. The MIL-PRF-64266/9 ASR, when application requires installation into a connector receptacle, shall be obtained through a separate PIN (M64266/9).

Visual mating indicator. Not applicable for a plug type test terminus adapter.

Protective caps: Each test terminus adapter shall be supplied with protective caps over the front and rear portions of the test terminus shell.

Weight: Weight shall not exceed the specified value in table I for the applicable shell size, cable entry angle and material.

TABLE I. Test terminus adapter weights.

Shell size	Shell size designator	Aluminum		Stainless steel	
		ounces	grams	ounces	grams
11	B	2.0	56.7	5.95	168.7
13	C	2.5	70.87	7.43	210.6
15	D	3.0	85.05	8.92	252.9
23	H	4.3	121.90	12.79	362.6

Qualification. Qualification shall consist of performing testing specified as listed in table II.

Test terminus adapters being qualified to this specification sheet shall include a test terminus MQJ and components for interface with a qualified MIL-PRF-64266 connector receptacle populated with cabled qualified MIL-PRF-29504/20 termini.

Test specimens:

Configuration. The test terminus MQJ consists of a MIL-PRF-85045/16 single mode, fiber optic cable with an instrument connector terminated at one end and a test terminus terminated at the other end. The multiple termini connector assembly consists of the MIL-PRF-64266 connector receptacle with terminus-to-instrument connector jumpers. The multiple termini connector receptacle is fully populated and each cavity position is tested.

Fabrication. Fabrication of the test terminus MQJ shall be performed in accordance with Requirement 4103 of MIL-STD-1678-4. Test terminus MQJ shall be constructed using the ferrule end face geometry and using fiber optic cable with the fiber size specified in table II. Separate test samples shall be constructed for interoperability. Fabrication of the multiple termini connector assembly shall be performed in accordance with MIL-STD-1678-4. Each cavity position of the multiple termini connector assembly shall meet the optical performance requirement when tested in accordance with MIL-STD-2042-6 Method 6F1.

TABLE II. Qualification inspections (except interoperability).

Test performed 2/, 12/	Test sample configurations 1/					
	Test terminus adapter				Test terminus	
Test terminus adapter shell size	15	23	11	13		
Test terminus adapter # of cavities	8	36	4	6		
Test terminus fiber size					9/125	9/125
Test terminus end face polish					PC	APC
Group 1 (4 mated pairs) 3/, 15/						
Interoperability 4/, 5/, 6/	X	X	X	X	X	
Visual & Mechanical						
Size	X	X	X	X	X	
Weight	X	X	X	X	X	
Identification marking	X	X	X	X	X	
Workmanship	X	X	X	X	X	
Screw thread	X	X	X	X		
Functional (Group 2 parts only)						
Insert retention radial strength 7/	X					
Insert retention axial strength	X					
Terminus insert & removal forces	X					
Terminus retention force	X					
Maintenance aging					X	
Shell to shell conductivity						
Connector coupling engage & disengage torque						
Backshell & backshell accessory attach						
Optical						
Insertion loss 12/	X	X	X	X	X	X
Return loss (SM only)	X	X	X	X	X	X
Crosstalk						
Group 2 (2 mated pairs) 15/						
Cable pull out force (retention)					X	
External bending moment						
Cable seal flexing 14/					X	
Twist					X	
Mating durability 13/	X					
Return loss (SM only) 11/					X	
Impact						
Crush						
Vibration						
Swept sine (TR1)						
Swept sine (TR2)						
Random at temperature (TR2 only)						
Random at ambient (TR1)						
Random at ambient (TR2)						
Return loss						
Shock						
MIL-S-901 (TR1 & TR2)						
Half-sine pulse (TR2 only)						
Insertion loss (verification)						
Water pressure						
Modified SO_2/salt spray						

See notes at end of table.

TABLE II. Qualification inspections (except interoperability) – Continued.

Test performed 2/, 12/	Test sample configurations 1/					
	Test terminus adapter				Test terminus	
Test terminus adapter shell size	15	23	11	13		
Test terminus adapter # of cavities	8	36	4	6		
Test terminus fiber size					9/125	9/125
Test terminus end face polish					PC	APC
Group 3 (2 mated pairs)						
Thermal shock (TR1)						
Thermal shock (TR2)					X	
Temperature/humidity cycling						
Temperature cycling (TR1)						
Temperature cycling (TR2)						
Altitude immersion						
Life aging (Temperature life) (TR1)						
Life aging (Temperature life) (TR2)						
Insert retention radial str						
Insert retention axial str						
Freezing water						
Insertion loss (verification)						
Return loss						
Sand & dust						
Con coup engage-disengage torque						
Terminus cleaning						
Identification marking						
Group 4 (2 mated pair + parts) 3/, 15/						
Electromagnetic effects (2 mp)						
Fluid immersion (2 mated pair)						
Salt spray (2 mated pair) 9/, 10/	X				X	
Con coupling engage-disengage torque						
Shell to shell conductivity						
Flammability (1 mated pair)						
Fungus resistance (parts) 8/	X				X	
Ozone exposure (parts) 8/	X				X	

NOTES:

1/ Qualification consist of performing tests in this table for test terminus adapters of each shell size and for test termini with different end face polishes. If only test terminus adapters are to be qualified, then perform qualification with previously qualified test termini.

2/ “X” indicates test applies for particular part(s).

3/ Group 1 test samples are to be used for Groups 2 and 4 tests. Group 4 can be done before Group 1 with separate samples.

4/ Interoperability test samples. Separate samples are required for interoperability testing. Optical loss testing shall be performed between qualified test termini and the test terminus adapters under test and between qualified test termini adapters and the test terminus under test. Qualified MIL-PRF-64266 connectors shall be used to mate to the test terminus adapters.

5/ Interoperability test source. This testing will be performed by DLA Land and Maritime - TEB which maintains/retains the interoperability standards. Please note that separate test samples are required for interoperability testing. These test samples will then be retained by DLA Land and Maritime as interoperability standards.

6/ Interoperability fiber types. Interoperability is performed on test terminus terminated on single mode fiber optic cable and on test terminus adapters for each shell size.

7/ Configuration requiring testing. To be performed for test terminus adapters with multiple piece inserts only.
8/ Parts required. Polymeric parts only.
9/ Samples for salt spray: Test samples from group 1 shall be used.
10/ Salt spray. Perform test for 48 hours. Perform salt spray test for this test terminus adapter in an un-mated configuration only.
11/ Return loss after mating durability. If failure occurs, ferrule end faces may be re-polished and test redone.
12/ Optical measurements. Optical measurements are to be obtained as specified using the test setup and procedures in MIL-STD-1678-2 except that optical loss test is to be performed per MIL-STD-2042-6.
13/ Mating durability. The optical loss shall be met after the test. The test terminus MQJ shall meet the return loss after the test.
14/ Cable seal flexing shall be performed on the test terminus transition piece to ensure adequate bend limiter from the cable entry end of the test terminus barrel (body) to the fiber optic cable.
15/ Each mated pair consists of the test terminus MQJ, test terminus adapter, and multiple termini connector assembly. See “Fabrication” for the configuration of the multiple termini connector assembly. The device under test can be the test terminus, the test terminus adapter or both.

Optical performance:

Insertion loss (initial).

Method.

(1) Initial insertion loss. Applicable except first perform by cutting the center of a previous uncut cable (a cable terminated with instrument end connections), inserting two test termini onto each end of the cut cable, mating the now two test terminus MQJ’s with an alignment sleeve and determining the insertion loss of the two test terminus MQJ’s in comparison with that of the uncut cable. An alignment sleeve or a suitable test terminus-to-test terminus adapter shall be used to position the ferrule end faces for this measurement. When only the test terminus adapter is being tested without a test terminus, the initial insertion is not applicable.

(2) Optical loss. After this initial insertion, perform an optical loss test on each of the two test terminus MQJ’s. Perform the MQJ selection test for optical loss by mating the test terminus end of the MQJ to a MIL-PRF-64266 connector assembly through a test terminus adapter. Perform the MQJ selection test in accordance with MIL-STD-2042-6 Method 6F1. When only the test terminus is being tested, a shell size 11 test terminus adapter and multiple termini connector assembly shall be used.

Requirement. Insertion loss of the test terminus MQJ mated pair shall not exceed 0.35 dB from that of the uncut cable. Optical loss measured through the test terminus adapter shall not exceed 0.50 dB with a maximum standard deviation of 0.10 dB.

Insertion loss verification.

Method. Perform an optical loss test on each test terminus MQJ. Perform the MQJ selection test for optical loss by mating the test terminus end of the MQJ to a MIL-PRF-64266 connector assembly through a test terminus adapter. Perform the MQJ selection test in accordance with MIL-STD-2042-6 Method 6F1. When only the test terminus is being tested, a shell size 11 test terminus adapter and multiple termini connector assembly shall be used.

Requirement. Optical loss measured through the test terminus adapter shall not exceed 0.50 dB with a maximum standard deviation of 0.10 dB.

Change in optical transmittance.

Method. Optical loss testing in accordance with the MIL-STD-2042-6 Method 6F1 MQJ selection test shall be performed in lieu of change in optical transmittance.
Requirement. Optical loss measured through the test terminus adapter shall not exceed 0.50 dB with a maximum standard deviation of 0.10 dB.

Optical signal discontinuity. Not Applicable.

Material performance:

Salt spray: Test samples (test terminus adapters) shall be tested in accordance with TIA-455-16, test condition C. No corrosive effects shall be seen on the external test terminus adapter parts that would be detrimental to the operation of the test terminus. No optical degradation shall occur as a result of this test. The criterion for insertion loss verification shall be used to determine if this optical requirement is met. Insertion loss verification, with test terminus inserted into each MIL-PRF-64266 shell size test terminus adapter under test, shall be performed both prior to and after the salt spray test.

Fluid immersion: Not Applicable.

Environmental/mechanical:

Backshell and backshell accessory attachment: Not applicable.

Identification marking: Applicable.

Banding strap attachment integrity. Not Applicable.

Backshell-to-connector mating torque: Not Applicable.

Connector coupling engagement and disengagement torque: Not Applicable.

Maintenance aging: Applicable except ten insertions and removals shall be performed with each cavity and the change in optical transmittance measurement performed at the tenth insertion. One cavity shall be selected at random with 250 insertions and removals of the test terminus performed. An optical transmittance measurement shall be performed after the 250 insertions. The test terminus adapter shall meet the optical loss during and after the test.

Fiber pull out force: Not Applicable.

Cable pull out force: Not Applicable.

Cable seal testing: Not Applicable.

Twist: Not Applicable.

Mating durability. Applicable except the test terminus adapter shall be mated to a MIL-PRF-64266 connector receptacle for 500 mating cycles. The change in optical transmittance measurement performed in each cavity after 500 mating cycles. The test terminus adapter shall show no signs of thread wear and shall meet the optical loss after the test.

Backshell mating durability. Not Applicable.

External bending moment: Not Applicable.

Impact: Not Applicable.

Crush: Not Applicable.

Water pressure: Not applicable.

Banding strap attachment integrity: Not Applicable.

Freezing water immersion: Not applicable.

Sand and dust: Not Applicable.

Electromagnetic effects: Not Applicable.

Salt spray: Applicable.

Shell-to-shell conductivity: Not Applicable.

Modified SO_2/salt spray: Not Applicable.

Altitude immersion: Not Applicable.

Fluid immersion: Not Applicable.

Cleaning procedures: Each shipment of test terminus adapters shall include recommended cleaning procedures. The following wording or equivalent is recommended "To clean, use lint free wipe dampened with alcohol and blow dry with air."

Marking.

Test terminus adapter shell. Shell shall be marked with the PIN and with the vendor part number.

Test terminus adapter insert. Each cavity of the insert shall be marked with the insert number. For shell sizes with two cavity configurations, the same cavity location shall be marked with both cavity numbers. A means shall be used to distinguish which marking applies to the lesser number of cavity configuration versus the greater number of cavity configuration.

Qualification by similarity:

Alternate test terminus adapter material. If a test terminus adapter in this specification sheet made from aluminum is qualified, and test terminus adapters made from stainless steel in this specification sheet meet the visual and mechanical, size, weight, identification marking, workmanship, screw thread, maintenance aging, mating durability, insertion loss, return loss and salt spray inspections, then the test terminus adapter of the alternate material inspected are qualified.

Alternate plating or plating process. If a test terminus adapter with one plating or plating process in this specification sheet is qualified, and test terminus adapters made with an alternate (different type) plating or same type plating using an alternate plating process in this specification sheet meet the plating and plating process specified in 4.7.5.5 of the MIL-PRF-64266 base specification, then the test terminus adapters with the alternate plating or plating process, as applicable, inspected are qualified.

Marking:

Part or Identification Number (PIN): Marked on coupling ring of the test terminus adapter.

M 64266/32 - X X X

M prefix

General specification number
and specification sheet

Shell size code designator
See table V

Class (material designator)
B = Stainless steel, passivated
D = Aluminum with non-conductive finish

Insert arrangement designator
See table V

PIN example: M64266/32 - CD1

TABLE V. PIN code designators.

Shell size	Shell size code	Insert arrangement designator	# of Insert cavities
11	B	2	2 or 4
13	C	1	6
15	D	2	8 or 10
23	H	1	18 or 36

Mating counterpart: Test terminus adapter mates with the MIL-PRF-64266/1 flanged connector receptacle, the MIL-PRF-64266/3 jamnut mounting connector receptacle and the MIL-PRF-29504/21.

Intended use:

This test terminus adapter is intended for use for the measurement using a test terminus type of MQJ.

Application restriction. Test terminus adapters produced under this specification sheet are intended for an MQJ application only. This test terminus adapter is not to be used in a connection application.

Referenced documents: In addition to MIL-PRF-64266, this specification sheet references the following documents:

MIL-PRF-29504/20
MIL-PRF-29504/21
MIL-PRF-64266/1
MIL-PRF-64266/3
MIL-PRF-64266/9
MIL-PRF-85045/16
MIL-S-901
MIL-STD-1678-2
MIL-STD-1678-4
MIL-STD-2042-6
TIA-455-16

Changes from previous issue. The margins of this specification sheet are marked with vertical lines to indicate where changes from the previous issue were made. This is done as a convenience only and the Government assumes no liability whatsoever for any inaccuracies in these notations. Bidders and contractors are cautioned to evaluate the requirements of the document based on the entire contents irrespective of the marginal notation and relationship to the last previous issue.

CONCLUDING MATERIAL

Custodians:
Army - CR
Navy - SH
Air Force - 85
DLA - CC

Review activities:
Army - TE
Navy - AS
Air Force - 13, 19, 93, 99
MISC – DI, MDA

Civil agencies:
GSA – FAS
NASA - NA

Preparing activity:
DLA - CC

(Project 6060-2014-064)

NOTE: The activities listed above were interested in this document on the date of this document. Since organizations and responsibilities can change, you should verify the currency of the information above

using the ASSIST Online database at https://assist.dla.mil.