INCH-POUND

MIL-PRF-64266/25
20 March 2014

PERFORMANCE SPECIFICATION SHEET

CONNECTORS, FIBER OPTIC, RECTANGULAR, PLUG, CARD FRONT EDGE STYLE, MULTIPLE REMOVABLE TERMINI, SINGLE FIBER CABLES, JACKSCREW LOCKING, NO STRENGTH MEMBER CAPTURE AT CABLE ENTRY INTERFACE, NONENVIRONMENT RESISTING, TEMPERATURE RANGES 1 & 2

This specification is approved for use by all Departments and Agencies of the Department of Defense.

The requirements for acquiring fiber optic connectors described herein shall consist of this specification sheet and MIL-PRF-64266.

SCOPE. The performance requirements specified herein cover a connector plug that is affixed to the connector receptacle on the front edge of a circuit card or printed circuit board (PCB). Mating of the connector plug to the connector receptacle is accomplished after the PCB is inserted into the backplane or rack. Once the connector receptacle, positioned on the front edge of the PCB, is correctly inserted into the backplane or rack, the connector halves are mated then tightened together using the feature of a jackscrew. Cable entry resistant features for the single fiber cables include ability to restrict movement, position, and twist; however, there are no features to capture the cabling or to prevent the penetration of various environments.

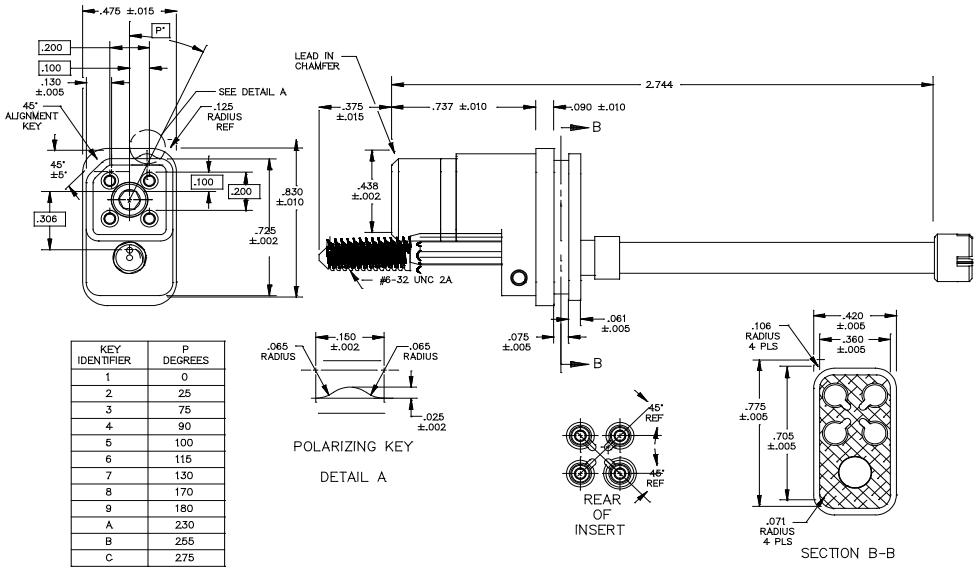

KEY IDENTIFIER	P DEGREES
1	0
2	25
3	75
4	90
5	100
6	115
7	130
8	170
9	180
A	230
B	255
C	275

Four Cavity Connector

FIGURE 1. Footprint dimensions.

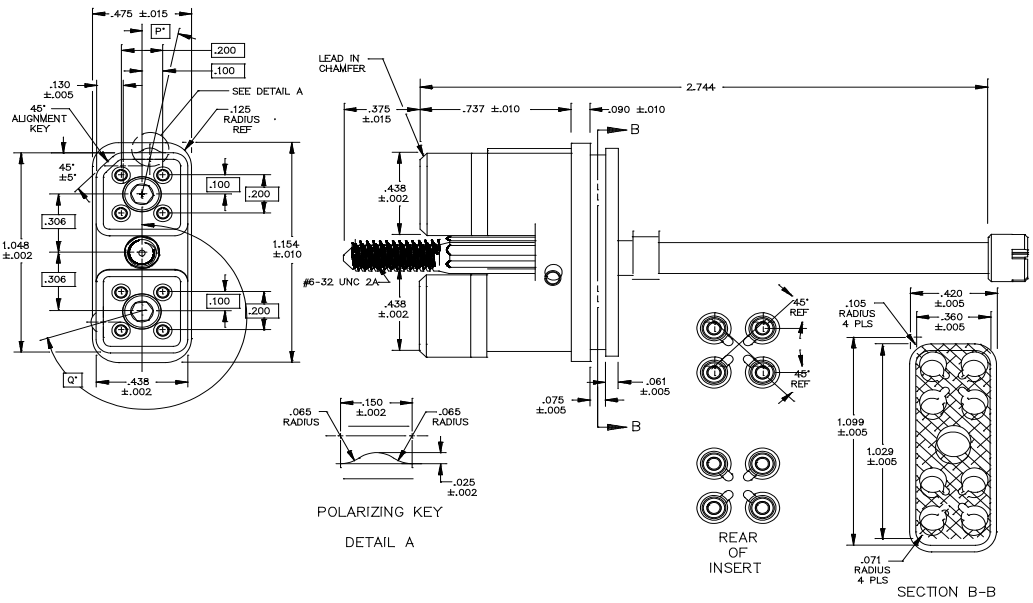

Eight Cavity Connector

FIGURE 1. Footprint dimensions - Continued.

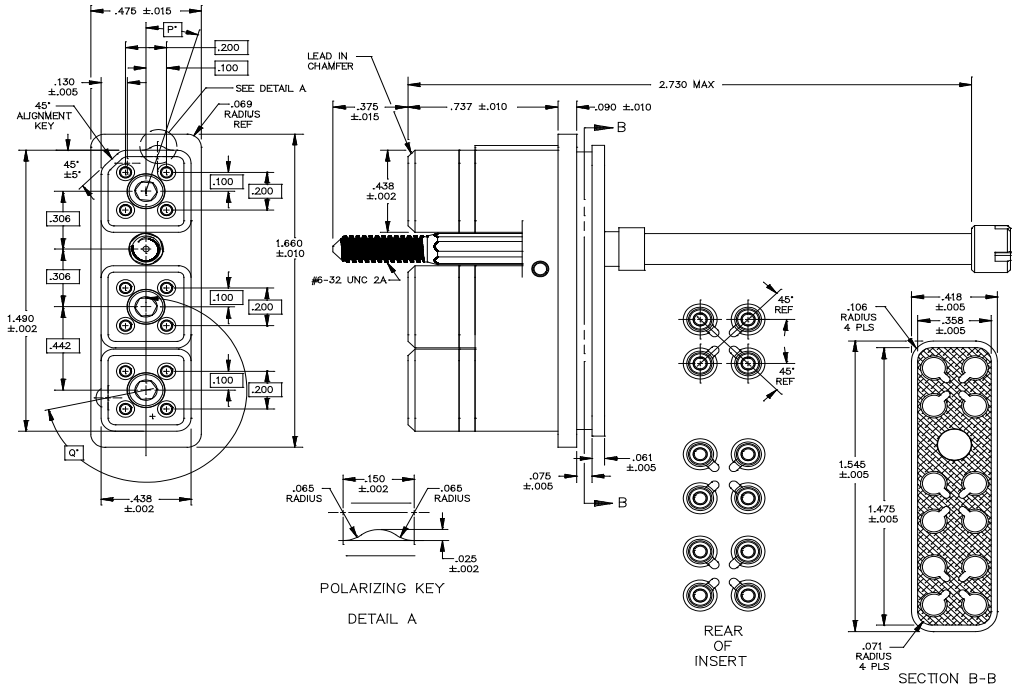

Twelve Cavity Connector

FIGURE 1. Footprint dimensions - Continued.

Notes:

1. Dimensions are in inches.
2. Metric equivalents are given for general information only.
3. Dimensions apply to plated/finished part.
4. Metric equivalents are in millimeters (mm).
5. Connector internal configuration is not shown. The connector plug to connector receptacle interface dimensions shall be in accordance with figure 1.
6. A jackscrew, that is a part of the connector plug, shall be used to lock the connector plug to the connector receptacle. The jackscrews used shall be captive and fastened using a number 01 Phillips screwdriver.
7. Envelop length dimensions are specified to one decimal place to expedite inspection process unless otherwise indicated.
8. Position for placing the polarizing key for the given key identifier is provided in figure 2.

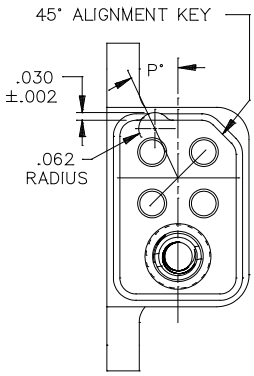

KEY IDENTIFIER	P DEGREES
1	0
2	25
3	75
4	90
5	100
6	115
7	130
8	170
9	180
A	230
B	255
C	275

Four Cavity Connector

FIGURE 2. Polarizing key positions

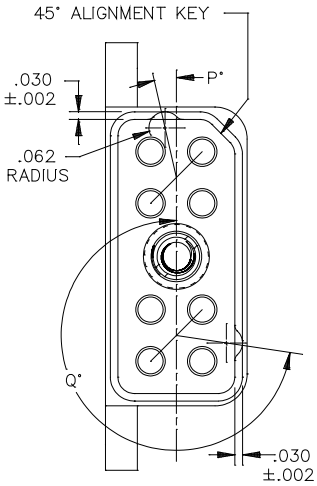

KEY IDENTIFIER	P DEGREES	Q DEGREES
1	0	N/A
2	25	N/A
3	75	N/A
4	90	N/A
5	100	N/A
6	115	N/A
7	155	N/A
8	N/A	170
9	N/A	180
A	N/A	200
B	N/A	255
C	N/A	275

Eight Cavity Connector

FIGURE 2. Polarizing key positions – Continued.

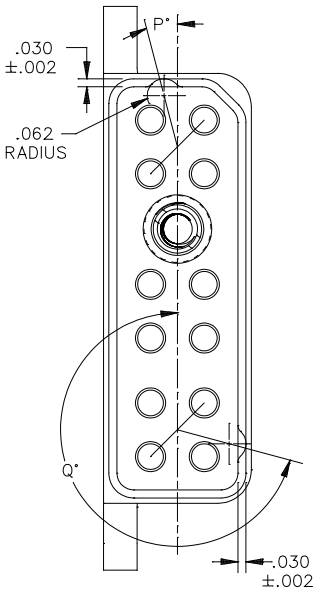

KEY IDENTIFIER	P DEGREES	Q DEGREES
1	0	N/A
2	25	N/A
3	75	N/A
4	90	N/A
5	100	N/A
6	115	N/A
7	155	N/A
8	N/A	170
9	N/A	180
A	N/A	200
B	N/A	255
C	N/A	275

Twelve Cavity Connector

FIGURE 2. Polarizing key positions – Continued.

Notes:
1. Dimensions are in inches.
2. Metric equivalents are given for general information only.
3. Dimensions apply to plated/finished part.
4. Metric equivalents are in millimeters (mm).
5. Each polarizing key identifier only has one polarizing key and this polarizing key is at the position listed in the table for this figure.
6. Refer to detail A on figure 1 for polarizing key dimensions.

REQUIREMENTS:

Dimensions and configurations: See figures 1 herein except position for placement of the polarizing key shall conform to figure 2. When not specified, the default position for placing the polarizing key shall be that of key identifier 1. See MIL-PRF-64266, figure 1 for terminus cavity dimensions.

Temperature ranges.

Operating:	-67^{0}F to 329^{0}F	(-55^{0}C to 165^{0}C)
Non-operating:	-40^{0}F to 168^{0}F	(-40^{0}C to 70^{0}C)
Storage:	-40^{0}F to 168^{0}F	(-40^{0}C to 70^{0}C)

Weight. Weight shall not exceed the specified value in table I for the applicable number of cavities and material.

TABLE I. Connector plug weight (without termini).

Cavity designator	No. of cavities	Composite		Aluminum		Stainless steel	
		ounce	grams	ounce	grams	ounce	grams
U	04	24	.84	28	.99	84	2.96
V	08	28	1.00	45	1.58	107	3.77
W	12	33	1.16	57	2.00	136	4.79

Fabrication procedure. Standard fabrication procedure for both the terminus termination (placement of the terminus onto the end of a fiber optic cable) and the assembly of the connector and backshell onto the fiber optic cabling shall be used. Standard fabrication procedure shall be in accordance with MIL-STD-1678-4. Copies of these documents are available online at http://quicksearch.dla.mil/ or from the Standardization Document Order Desk, 700 Robbins Avenue, Building 4D, Philadelphia, PA 19111-5094.

Termini. The connector in the specification sheet shall use the MIL-PRF-29504/18 and MIL-PRF-64266/24 termini. For unoccupied termini cavities, the connector shall be able to use dummy terminus, per MIL-PRF-29504/19.

Alignment Sleeve Retainer (ASR). A MIL-PRF-64266/26 ASR shall be installed in the connector plug as part of this PIN. The MIL-PRF-64266/26 ASR, when application requires that an ASR be provided as a separate component, shall be obtained through a separate PIN (M64266/26).

Keying, plug-to-receptacle. The connector plug shall be keyed with the connector receptacle to permit connector plug insertion into the connector receptacle in only one orientation.

Polarization keys. Keying positions shall be designated “1” through “9” as shown in figure 2. Key position designator “1” is the common polarization key position and the one to specify when there is no need to have multiple connectors with multiple polarization key positions.

Backshell configurations. The configuration for the connector receptacle shall be straight whereas the one for the connector plug shall be at a 90 degree angle (i.e., cable entry end shall be at a 90 degree angle to the backshell-to-connector interface). The connector shall be qualified with this backshell configuration. The backshell shall be removable and optional (connector shall be functional without the use of the backshell).

Backshell means of attachment. The means and interface dimensions to ensure that a backshell remains affixed or coupled to a connector plug are shown in figure 1. The envelop dimensions for the backshell are shown in MIL-PRF-64266/30. This coupling shall be sufficient to ensure no backing off of the backshell during mechanical shock or vibration.

Qualification. Qualification shall consist of performing testing specified as listed in table II. Qualification shall consist of performing tests in table II for both temperature range 1 (TR1) and temperature range 2 (TR2). There is no separate qualification for only one temperature range.
For qualification, all cavities shall be populated with qualified MIL-PRF-29504/20 termini. Termini qualification is not performed using a MIL-PRF-64266 connector under this specification sheet.

Identification marking. Applicable. Both initial and after environmental testing.

Backshell and backshell accessory attachment. Not applicable.

Connector coupling engagement and disengagement torque. Applicable except this test has been modified for card front edge connector with jackscrew. The jackscrew and mating connector receptacle threads shall withstand the applied torque specified in table III to mate (affix) the jackscrew into the connector receptacle with no damage. The connector receptacle shall be mounted in a suitable fixture to prevent movement of the connector during the test. The connector plug shall be brought to the position to start the mating and where the measured torque is at zero. The connector plug shall be fully mated to the connector receptacle. The maximum torque applied to the jackscrew to completely engage the two connector halves shall be obtained. After resetting the torque to an indication of zero, the connector plug shall be completely unmated from the connector receptacle. The maximum torque to disengage the two mated connector halves shall be obtained.
ASR retention radial strength. Applicable except that both a clockwise and counterclockwise radial torque shall be applied to ASR (Alignment Sleeve Retainer) while the ASR is affixed to the connector plug. In each direction, the radial torque shall be applied at 15 +5/-0 in-lb (85 N-cm) and maintained for at least one minute. There shall be no rotational displacement between the ASR and the connector plug or any cracking of the alignment sleeves.

ASR retention axial strength. Applicable except that a pressure shall be applied to the mating surface of ASR while the ASR is affixed to the connector plug. The mating surface for this test is the surface that comes into contact with the connector receptacle. An axial pressure shall be applied on the ASR mating surface at 100 +5/-0 lb/sq in (0.69 MPa) and maintained for at least one minute. The test shall be repeated with the axial pressure applied to the connector plug back surface (i.e., surface that mates with the backshell). There shall be no axial displacement between the ASR and the connector plug or any cracking of the alignment sleeves.

TABLE II. Qualification inspections (except interoperability).

Number of cavities	Test sample configurations 2/				
Fiber size (microns)	8	8	8	4	12
Temperature range	SM	MM 50/125	MM 62.5/125	SM	SM
Test performed 1/, 19/	TR2	TR2	TR2	TR2	TR2
Group 1 (4 mated pairs) 3/					
Interoperability 4/, 5/, 6/	X	X	X	X	X
Visual & Mechanical					
Size	X	X	X	X	X
Weight	X	X	X	X	X
Identification marking	X	X	X	X	X
Screw threads	X	X	X	X	X
Workmanship	X	X	X	X	X
Functional					
ASR retention radial strength	X			X	X
ASR retention axial strength 15/	X			X	X
Terminus insertion and removal	X				
Terminus retention force	X				
Maintenance aging, termini	X				
Maintenance aging, ASR	X				
Shell to shell conductivity					
Connector coupling	X				
Backshell and accessory attachment					
Banding strap attachment integrity					
Compression fitting engagement					
Backshell mating durability	X				
Optical					
Insertion loss (initial)	X	X	X	X	X
Return loss (SM only) 17/	X			X	X
Cross talk					
Group 2 (2 mated pairs)					
Backshell-to-connector mating torque					
Cable pull out force (retention)					
External bending moment	X				
Cable seal flexing					
Twist	X				
Mating Durability	X			X	X
Return loss 18/	X			X	X
Impact	X				
Crush					
Vibration: swept sine (TR1)	X			X	X
Vibration: random (TR1)	X			X	X
Vibration: swept sine (TR2)	X	X		X	X
Vibration: random (TR2)	X	X		X	X
Vibration: random with temperature	X	X		X	X
Return loss	X	X		X	X
Shock: MIL-S-901 13/	X	X	X	X	X
Shock: half-sine pulse (TR2)	X	X			
Insertion loss verification	X	X	X	X	X
Water pressure					
Modified SO_2/salt spray					
Insertion retention radial strength					

See notes at end of table.

TABLE II. Qualification inspections (except interoperability)- Continued.

1/ Qualification consist of performing tests in this table for both temperature range 1 (TR1) and temperature range 2 (TR2). For each connector with a different number of cavities, the recommended sequence is to perform the 8 cavity connector first (or simultaneously). Then the other connectors with a different number of cavities can be obtained with performing only the tests listed. Otherwise, the entire test sequence listed for connector with 8 cavities must be performed.
2/ "X" indicates test applies for particular part(s).
3/ Group 1 mated pair are to be used for Groups 2 and 3 tests. Group 4 can be done before Group 1 with separate samples.
4/ Interoperability test samples. Separate samples are required for interoperability testing. Connector interoperability samples are to be fully populated with termini on single fiber cable and configured without backshells. Backshell interoperability samples are to be constructed with terminated cables that fully populate the connector of the shell size under test. See Requirement 4103 of MIL-STD-1678-4 for test sample configuration.
5/ Interoperability test source. This testing is done by DLA Land and Maritime-TEB which maintains/retains the interoperability standards. Please note that separate test samples are required for interoperability testing. These test samples will then be retained by DLA Land and M
as interoperability standards.
6/ Interoperability fiber types. Interoperability is performed on both single mode and multimode for each connector with a different number of cavities.
7/ Configuration requiring testing. To be performed for connectors with multiple piece inserts only.
8/ Electromagnetic effects. Not applicable.
9/ Parts required. Polymeric parts from 1 mated pair. Assembly is not required.
10/ Two options for salt spray: a. Use same two mated pair from the fluid immersion test. b. Use separate mate pair (If option b, can use one cable of sufficient length to loop around to the cable entrance of each backshell).
11/ Options for flammability. Two mated pair from the fluid immersion, salt spray, or Group 2/3 samples after that Group's test completion may be used.
12/ Post temperature life test. For non-metallic connectors, perform insert retention axial strength and insert retention radial strength after conclusion of the temperature life test.
13/ Shock test. Standard shock fixture 4A for bulkhead mounting shall be used. Supplement test fixture that shall be used and the mounting shall be performed as specified in Measurement 3202 of MIL-STD-1678-3.
14/ Perform on card front edge connector plug configuration only.
15/ Perform on composite connectors only.
16/ Temperature life (TR2). Perform for connector only if there are not the same materials (including insert) and/or manufacturing process.
17/ Return loss. Return loss shall be obtained using the test setup and procedures per Measurement 2105 of MIL-STD-1678-2 for MIL-PRF-29504/20 termini with a domed end face and PC polish and for MIL-PRF-29504/20 termini with a domed end face and APC polish.
18/ Return loss after mating durability. If failure occurs, ferrule end faces may be re-polished and test redone.
19/ Optical measurements. Optical measurements are to be obtained as specified using the test setup and procedures in MIL-STD-1678-2.

TABLE III. Jackscrew engagement and disengagement torque.

No. of cavities	Jackscrew torque 1/ +/- 1 in-lb (+/- .11 N-m)			
	Composite		Metal	
	in-lb	N-m	in-lb	N-m
04	2.5	.30	5.0	.60
08	2.5	.30	5.0	.60
12	2.5	.30	5.0	.60

1/ Increments are rounded to nearest 0.05 N-m for compatibility with a torque wrench.

Maintenance aging, termini. Applicable.

Maintenance aging, ASR (Alignment Sleeve Retainer). Applicable except that the ASR shall be tightened to the connector plug when reaffixed with the torque specified in table IV. Both connector plug and ASR shall show no wear or damage. No cracking or other damage shall occur to the alignment sleeves.

TABLE IV. Torque to install ASR.

No. of cavities	ASR torque 1/ +/- 1 in-lb (+/- .11 N-m)			
	Composite		Metal	
	in-lb	N-m	in-lb	N-m
04	2.0	.25	4.0	.50
08	2.0	.25	4.0	.50
12	2.0	.25	4.0	.50

1/ Increments are rounded to nearest 0.05 N-m for compatibility with a torque wrench.

Cable pull-out force. Not applicable.

External bending moment. Applicable except that a minimum bending moment load of 30 inch-pounds (3.39 N-m) as measured from the wall (panel) shall be applied. The load shall be applied at a rate of approximately 1.0 inch-pounds (0.11 N-m) per second until the required load is applied. The load (P) applied across the smallest continuous exterior dimension of the plug connector backshell may be rectangular in the longitudinal direction.

Cable seal flexing. Not applicable.

Twist. Applicable.

Mating durability. Applicable.

Backshell mating durability. Backshell shall be assembled and completely disassembled for 25 assembly (mating) cycles. Each cycle shall include connector-to-backshell coupling (mating) as part of the backshell assembly. A new piece of heat shrink shall be used for each assembly. No optical measurements need to be performed during or after this test. Separate cabling may be used for this test. This test may be performed prior to test sample assembly for Group I optical tests.

Impact. Applicable except that the unmated connector plug shall be tested using a fixture as shown in figure 3 that contains a steel block with a 1.2 cm (0.5 in) minimum thickness. Connector plug cabling shall be secured to a clamp 1.5 meters from the back of the back of the connector plug strain relief. With the connector plug hanging under its own weight, the connector plug shall be at the horizontal and vertical center of the steel block (see figure 3). The connector plug is then raised to the height of the clamp, 1.5 m (59 in), and with the cable extended, released so as to strike the steel block. The test shall consist of 8 drops. Individual dust caps may be place over each terminus ferrule. The change in optical transmittance shall be performed after the test. A visual inspection shall be performed after the test.

Crush. Not Applicable.

Water pressure. Not Applicable.

Banding strap attachment integrity. Not Applicable.

Compression fitting engagement integrity. Not Applicable.

Freezing water. Not Applicable.

Sand and dust. Not Applicable.

Electromagnetic effects. Not Applicable.

Salt spray. Applicable.

Shell-to-shell conductivity. Not Applicable.

Modified SO_2/salt spray. Not Applicable.

Altitude immersion. Applicable.

Fluid immersion. Not Applicable.

Qualification by similarity.

Connector configurations to test. The below qualification by similarity is valid if tested M64266/25 connectors with a straight cable entry angle backshell on the connector receptacles and a 90 degree cable entry angle backshell on the connector plugs for each two connector mated pair going through one group of tests.

Greater number of cavities. This qualification by similarity is applicable when testing connectors with a larger number of cavities in this specification sheet from the initial connector with eight cavities qualified in this specification sheet. If a connector with eight cavities is qualified, and connectors with a larger number of cavities with similar design, construction, and materials meet the inspections in table II and as performed in the qualification test sequence, then the connectors with a larger number of cavities inspected is qualified.

Lesser number of cavities. This qualification by similarity is applicable when testing connectors with a lesser number of cavities in this specification sheet from the initial connector with eight cavities qualified in this specification sheet. If a connector with eight cavities is qualified, and a connector with a lesser number of cavities having similar design, construction, and materials meet the inspections in table II and as performed in the qualification test sequence, then the connector with a lesser number of cavities inspected is qualified.

Alternate material. If a connector in this specification sheet made from aluminum is qualified, and connectors made from composite or stainless steel in this specification sheet meet the inspections in table V and as performed in the qualification test sequence, then the connectors of the alternate material inspected is qualified.

Alternate plating or plating process. If a connector with one plating or plating process in this specification sheet is qualified, and connectors made with an alternate (different type) plating or same type plating using an alternate plating process in this specification sheet meet the plating and plating process specified in 4.7.5.5 of the MIL-PRF-64266 base specification, then the connectors with the alternate plating or plating process, as applicable, inspected are qualified.

TABLE V. Qualification by extension for alternate material, plating, plating process.

	Alternate material 2/	Alternate plating/plating process 21/
Number of cavities	8	8
Fiber size (microns)	SM	22/
Temperature range	TR2	TR2
Test performed 1/, 19/		
Group 1 (4 mated pairs) 3/		
Inoperability 4/, 5/, 6/		
Visual & mechanical		
Size	X	X
Weight	X	X
Identification marking	X	X
Screw threads	X	X
Workmanship	X	X
Functional		
ASR retention radial strength	X	X
ASR retention axial strength 15/	X	X
Terminus insertion and removal		
Terminus retention force		
Maintenance aging, termini		
Maintenance aging, ASR		
Shell to shell conductivity		
Connector coupling engage/disengage		
Backshell and accessory attachment		
Banding strap attachment integrity		
Compression fitting engagement		
Backshell mating durability	X	X
Optical		
Insertion loss (initial)	X	X
Return loss (SM only) 17/	X	X
Crosstalk		
Group 2 (2 mated pair)		
Backshell-to-connector mating torque		
Cable pull out force (retention)		
External bending moment		
Cable seal flexing		
Twist		
Mating durability	X	X
Return loss 18/		
Impact		
Crush		
Vibration: swept sine (TR1)		
Vibration: random (TR1)		
Vibration: swept sine (TR2)	X	X
Vibration: random (TR2)	X	
Vibration: random with temperature	X	
Return loss		
Shock: MIL-S-901 13/	X	
Shock: Half-sine pulse (TR2)		
Insertion loss verification		
Water pressure		
Modified SO_2/salt spray		
Insert retention radial		

See notes at end of table.

TABLE V. Qualification by extension for alternate material, plating, plating process. – Continued.

	Alternate material 2/	Alternate plating/plating process 21/
Number of cavities	8	8
Fiber size (microns)	SM	22/
Temperature range	TR2	TR2
Test performed 1/, 19/		
Group 3 (2 mated pair)		
Thermal shock (TR1)		
Thermal shock (TR2)	X	X
Temperature/humidity cycling	X	X
Temperature cycling (TR1)		
Temperature cycling (TR2) 16/	X	X
Altitude immersion	X	
Life aging (temperature life) (TR1)		
Life aging (temperature life) (TR2)	X	X
Insert retention radial strength 7/, 12/		
Insert retention axial strength 12/		
Freezing water		
Insertion loss verification		
Return loss		
Sand & dust		
Connector coupling engage/disengage		
Identification marking	X	X
Insert retention radial strength		
Group 4 (2 mated pair + parts) 3/		
Electromagnetic effects (2 mated pair) 8/		
Fluid immersion (2 mated pair)		
Shell to shell conductivity (initial)		
Salt spray (2 mated pair) 10/	X	X
Salt spray (TR2)		
Connector coupling engage/disengage		
Shell to shell conductivity		
Flammability (1 mated pair) 11/	X 20/	X 20/
Fungus resistance (parts) 9/	X 20/	X 20/
Ozone exposure (parts) 9/	X 20/	X 20/
Insertion loss verification		

1/ Qualification for MIL-PRF-64266/25 consist of performing tests in this table for temperature range 2 (TR2). This limited test sequence is valid only under the constraints specified under “Qualification” in this specification sheet.
2/ “X” indicates test applies for particular part(s).
3/ Group 1 mated pair are to be used for Groups 2 and 3 tests. Group 4 can be done before Group 1 with separate samples.
4/ Interoperability test samples. Not applicable.
5/ Interoperability test source. Not applicable.
6/ Interoperability fiber types. Not applicable.
7/ Configuration requiring testing. To be performed for connectors with multiple piece inserts only.
8/ Electromagnetic effects. Not applicable.
9/ Parts required. Polymeric parts from 1 mated pair. Assembly is not required.
10/ Two options for salt spray: a. Use same two mated pair from the fluid immersion test. b. Use separate mate pair (If option b, can use one cable of sufficient length to loop around to the cable entrance of each backshell).
11/ Options for flammability. Two mated pair from the fluid immersion, salt spray, or Group 2/3 samples after that Group’s test completion may be used.

TABLE IV. Qualification by extension for alternate material, plating, plating process. – Continued.

12/ Post temperature life test. For non-metallic connectors, perform insert retention axial strength and insert retention radial strength after conclusion of the temperature life test.
13/ Shock test. Standard shock fixture 4A for bulkhead mounting shall be used. Supplement test fixture that shall be used and the mounting shall be performed as specified in Measurement 3202 of MIL-STD-1678-3.
14/ Perform on card front edge connector plug configuration only.
15/ Perform on composite connectors only.
16/ Temperature life (TR2). Perform for connector only if there are not the same materials (including insert) and/or manufacturing process.
17/ Return loss. Return loss shall be obtained using the test setup and procedures per Measurement 2105 of MIL-STD-1678-2 for MIL-PRF-29504/20 termini with a domed end face and PC polish and for MIL-PRF-29504/20 termini with a domed end face and APC polish.
18/ Return loss after mating durability. If failure occurs, ferrule end faces may be re-polished and test redone.
19/ Optical measurements. Optical measurements are to be obtained as specified using the test setup and procedures in MIL-STD-1678-2.
20/ Perform for plating types containing non-metallic elements.
21/ Optical measurements are optional for tests performed in this column.
22/ Use single mode (SM) fiber if optical measurements are performed, otherwise fiber size for the cable used does not matter.

Marking.

Part or Identification Number (PIN). Marked on shell of the connector.

Part or Identifying Number (PIN). Mark on coupling ring of the backshell.

M 64266/ 25 - X X X

M prefix

Specification number

Connector specification sheet

Number of cavities designator
See table I

Class (material designator)
B = Stainless steel, passivated
D = Aluminum with non-conductive finish
E = Composite with non-conductive finish

Polarization keying position
(Positions 1 through 9 and A through C, see key identifier in figure 2)

PIN example: M64266/25-UC1

Installation and removal tools. Termini shall be inserted onto the connector and terminated onto the fiber optic cables using only the tools and equipment listed in MIL-STD-1678-6 for the termini termination and connector assembly procedures.

Mating counterpart connector. M64266/22

Referenced documents. In addition to MIL-PRF-64266, this specification sheet references the following documents:

MIL-PRF-64266/26
MIL-PRF-64266/30
MIL-PRF-64266/24
MIL-STD-1678-2
MIL-STD-1678-3
MIL-STD-1678-4
MIL-STD-1678-6
MIL-PRF-28876
MIL-PRF-29504/18
MIL-PRF-29504/19
MIL-PRF-29504/20
MIL-S-901

Standardization based on lessons learned. For the older, existing fiber optic, multiple termini connectors; each vendor has a different mechanism and assembly process. The logistic support is taxing the system. For instance, at several JFOWG (Joint Fiber Optic Working Group) meetings, the Navy school house reported that training on the MIL-PRF-28876 connector assembly took a significant portion of the time and cost for the fiber optic curriculum. This leads to logistic difficulties in adding new training material and obtaining (paying for) parts needed in this connector assembly. The implementation of this lesson learned is that the connector configuration and assembly process for any new connector and any new backshell configuration introduced must be standardized to the maximum extent feasible.

CONCLUDING MATERIAL

Custodians:
Army - CR
Navy - SH
Air Force – 85
DLA - CC

Review activities:
Navy - AS
Air Force - 13, 19, 93, 99
DIA - DI
NASA - NA

Preparing activity:
DLA - CC

(Project 6060-2013-023)

NOTE: The activities listed above were interested in this document on the date of this document. Since organizations and responsibilities can change, you should verify the currency of the information above using the ASSIST Online database at https://assist.dla.mil.