INCH-POUND

MIL-PRF-55629/9E
w/AMENDMENT 1
14 July 2021

SUPERSEDING
MIL-PRF-55629/9E
10 March 2010

PERFORMANCE SPECIFICATION SHEET

CIRCUIT BREAKERS, MAGNETIC, LOW-POWER, UNSEALED, TRIP-FREE, SERIES TRIP, DOUBLE POLE (0.2 TO 30 AMPERES)

This specification is approved for use by all Departments and Agencies of the Department of Defense.

The requirements for acquiring the product described herein shall consist of this specification sheet and MIL-PRF-55629.

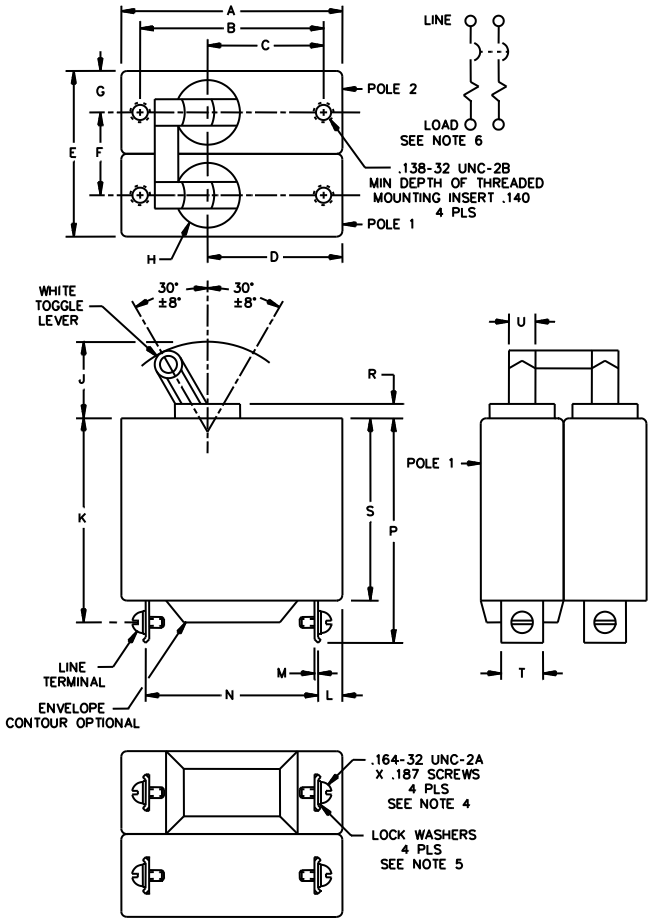

FIGURE 1. Dimensions and configurations (configuration 1).

Ltr	Inches		mm	
	Min	Max	Min	Max
A	1.969	2.031	50.01	51.56
B	1.629	1.691	41.38	42.95
C	1.019	1.081	25.88	27.46
D	1.189	1.251	30.20	31.78
E	1.469	1.531	37.31	38.89
F	.719	.781	18.26	19.84
G	.365	.385	9.27	9.78
H	.559 DIA	.621 DIA	14.20 DIA	15.77 DIA
J	.658	.722	16.71	18.34
K	---	1.850	---	46.99
L	.189	.251	4.80	6.38
M	.030	.035	0.76	0.89
N	1.529	1.591	38.84	40.41
P	---	2.032	---	51.61
R	.099	.161	2.51	4.09
S	---	1.650	---	41.91
T	.349	.411	8.86	10.44
U	.209	.271	5.31	6.88

NOTES:
1. Dimensions are in inches.
2. Metric equivalents are given for general information only.
3. Unless otherwise specified, tolerance is ±.031 (0.79 mm).
4. Terminal screw, No. 8, .164-32UNC-2A, .187 ±.015 long, Material: Brass, tin plated (ASTM-B545 or equivalent).
5. Lockwasher - split, No. 8 NASM35338-137 or equivalent.
6. Physical item marking of the load terminal is optional.

FIGURE 1. Dimensions and configurations (configuration 1) – Continued.

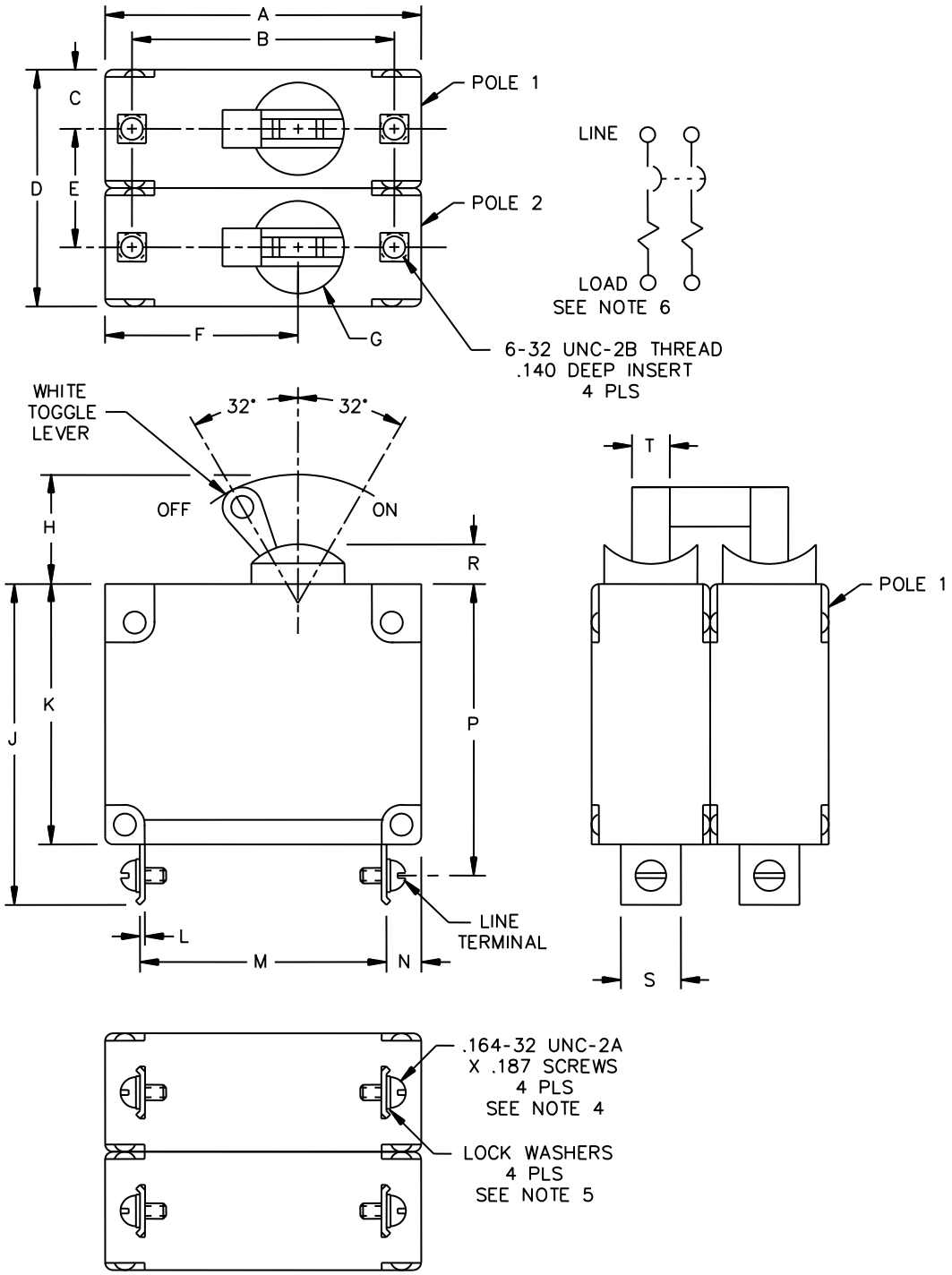

FIGURE 2. Dimensions and configurations (configuration 2).

Ltr	Inches		mm	
	Min	Max	Min	Max
A	1.985	2.015	50.42	51.18
B	1.645	1.675	41.78	42.55
C	.360	.390	9.14	9.91
D	---	1.515	---	38.48
E	.735	.765	18.67	19.43
F	1.205	1.235	30.61	31.37
G	---	.590	---	14.99
H	.675	.705	17.15	17.91
J	---	2.075	---	52.71
K	1.672	1.702	42.47	43.23
L	.016	.046	0.41	1.17
M	1.515	1.545	38.48	39.24
N	.215	.245	5.46	6.35
P	---	1.920	---	48.77
R	.110	.140	2.79	3.56
S	.360	.390	9.14	9.91
T	.245	.275	6.22	6.99

NOTES:
1. Dimensions are in inches.
2. Metric equivalents are given for general information only.
3. Unless otherwise specified, tolerance is ± .015 (0.38 mm).
4. Terminal screw, No. 8, .164-32UNC-2A, .187 ±.015 long, Material: Brass, tin plated (ASTM-B545 or equivalent).
5. Lockwasher: Split, No. 8 NASM35338-137 or equivalent.
6. Physical item marking of the load terminal is optional.
7. For configuration 2, a “G” has been added to the end of the dash number.

FIGURE 2. Dimensions and configurations (configuration 2) - Continued.

REQUIREMENTS

Dimensions and configuration: See figure 1 and figure 2.

Current ratings: See table I.

Voltage ratings: See table I. 240 V ac breakers are designed also for use at 120 V ac.

Tripping-time delays: See table I and table II.

Terminal and mounting hardware: See figure 1.

Terminals: See figure 1. Solderability is applicable. Solder terminals are formed by removal of screws.

Actuator strength: 25 pounds.

Actuator operating force: 4 pounds, maximum.

Terminal strength:

Applied load: 30 pounds.

Applied torque: 10 inch-pounds.

Interrupting capacities:

2,000 amperes at 50 V dc.

2,000 amperes at 120 V ac, 60 Hz.

1,500 amperes at 120 V ac, 400 Hz.

1,000 amperes at 240 V ac, 60 and 400 Hz.

VERIFICATION:

Qualification inspection: Not applicable.

Conformance inspection: Group A tests of MIL-PRF-55629.

Part or Identifying Number (PIN): M55629/9- (dash number from table I).

TABLE I. Circuit breaker dash numbers and applicable characteristics (configuration 1).

Dash no.	Current rating (amperes)	Voltage rating	Tripping time delay	Resistance or impedance ohms (max.)
001	0.2	50 V dc	A	32
002	0.2	50 V dc	B	32
003	0.2	24 0 V ac, 60 Hz	C	34
004	0.2	240 V ac, 60 Hz	D	34
005	0.2	240 V ac, 400 Hz	E	72
006	0.2	240 V ac, 400 Hz	F	72
007	0.2	240 V ac, 400 Hz	G	72
008	0.5	50 V dc	A	6
009	0.5	50 V dc	B	6
010	0.5	240 V ac, 60 Hz	C	6
011	0.5	240 V ac, 60 Hz	D	6
012	0.5	240 V ac, 400 Hz	E	12
013	0.5	240 V ac, 400 Hz	F	12
014	0.5	240 V ac, 400 Hz	G	12
015	1.0	50 V dc	A	2
016	1.0	50 V dc	B	2
017	1.0	240 V ac, 60 Hz	C	2
018	1.0	240 V ac, 60 Hz	D	2
019	1.0	240 V ac, 400 Hz	E	4
020	1.0	240 V ac, 400 Hz	F	4
021	1.0	240 V ac, 400 Hz	G	4
022	2.0	50 V dc	A	.5
023	2.0	50 V dc	B	.5
024	2.0	240 V ac, 60 Hz	C	.5
025	2.0	240 V ac, 60 Hz	D	.5
026	2.0	240 V ac, 400 Hz	E	.8
027	2.0	240 V ac, 400 Hz	F	.8
028	2.0	240 V ac, 400 Hz	G	.8
029	3.0	50 V dc	A	.3
030	3.0	50 V dc	B	.3
031	3.0	240 V ac, 60 Hz	C	.3
032	3.0	240 V ac, 60 Hz	D	.3
033	3.0	240 V ac, 400 Hz	E	.5
034	3.0	240 V ac, 400 Hz	F	.5
035	3.0	240 V ac, 400 Hz	G	.5
036	4.0	50 V dc	A	.1
037	4.0	50 V dc	B	.1
038	4.0	240 V ac, 60 Hz	C	.1
039	4.0	240 V ac, 60 Hz	D	.1
040	4.0	240 V ac, 400 Hz	E	.3
041	4.0	240 V ac, 400 Hz	F	.3
042	4.0	240 V ac, 400 Hz	G	.3
043	5.0	50 V dc	A	.08
044	5.0	50 V dc	B	.08
045	5.0	240 V ac, 60 Hz	C	.08
046	5.0	240 V ac, 60 Hz	D	.08
047	5.0	240 V ac, 400 Hz	E	.15
048	5.0	240 V ac, 400 Hz	F	.15
049	5.0	240 V ac, 400 Hz	G	.15

TABLE I. Circuit breaker dash numbers and applicable characteristics (configuration 1) - Continued.

Dash no.	Current rating (amperes)	Voltage rating	Tripping time delay	Resistance or impedance ohms (max.)
050	6.0	50 V dc	A	.06
051	6.0	50 V dc	B	.06
052	6.0	240 V ac, 60 Hz	C	.06
053	6.0	240 V ac, 60 Hz	D	.06
054	6.0	240 V ac, 400 Hz	E	.08
055	6.0	240 V ac, 400 Hz	F	.08
056	6.0	240 V ac, 400 Hz	G	.08
057	7.0	50 V dc	A	.04
058	7.0	50 V dc	B	.04
059	7.0	240 V ac, 60 Hz	C	.04
060	7.0	240 V ac, 60 Hz	D	.04
061	7.0	240 V ac, 400 Hz	E	.07
062	7.0	240 V ac, 400 Hz	F	.07
063	7.0	240 V ac, 400 Hz	G	.07
064	8.0	50 V dc	A	.03
065	8.0	50 V dc	B	.03
066	8.0	240 V ac, 60 Hz	C	.03
067	8.0	240 V ac, 60 Hz	D	.03
068	8.0	240 V ac, 400 Hz	E	.06
069	8.0	240 V ac, 400 Hz	F	.06
070	8.0	240 V ac, 400 Hz	G	.06
071	9.0	50 V dc	A	.018
072	9.0	50 V dc	B	.018
073	9.0	240 V ac, 60 Hz	C	.02
074	9.0	240 V ac, 60 Hz	D	.02
075	9.0	240 V ac, 400 Hz	E	.05
076	9.0	240 V ac, 400 Hz	F	.05
077	9.0	240 V ac, 400 Hz	G	.05
078	10.0	50 V dc	A	.02
079	10.0	50 V dc	B	.02
080	10.0	240 V ac, 60 Hz	C	.02
081	10.0	240 V ac, 60 Hz	D	.02
082	10.0	240 V ac, 400 Hz	E	.04
083	10.0	240 V ac, 400 Hz	F	.04
084	10.0	240 V ac, 400 Hz	G	.04
085	12.5	50 V dc	A	.013
086	12.5	50 V dc	B	.013
087	12.5	240 V ac, 60 Hz	C	.015
088	12.5	240 V ac, 60 Hz	D	.015
089	12.5	240 V ac, 400 Hz	E	.03
090	12.5	240 V ac, 400 Hz	F	.03
091	12.5	240 V ac, 400 Hz	G	.03
092	15.0	50 V dc	A	.01
093	15.0	50 V dc	B	.01
094	15.0	240 V ac, 60 Hz	C	.011
095	15.0	240 V ac, 60 Hz	D	.011
096	15.0	240 V ac, 400 Hz	E	.02
097	15.0	240 V ac, 400 Hz	F	.02
098	15.0	240 V ac, 400 Hz	G	.02

TABLE I. Circuit breaker dash numbers and applicable characteristics (configuration 1) - Continued.

Dash no.	Current rating (amperes)	Voltage rating	Tripping time delay	Resistance or impedance ohms (max.)
099	20.0	50 V dc	A	.007
100	20.0	50 V dc	B	.007
101	20.0	240 V ac, 60 Hz	C	.007
102	20.0	240 V ac, 60 Hz	D	.007
103	20.0	240 V ac, 400 Hz	E	.01
104	20.0	240 V ac, 400 Hz	F	.01
105	20.0	240 V ac, 400 Hz	G	.01
106	25.0	50 V dc	A	.006
107	25.0	50 V dc	B	.006
108	25.0	240 V ac, 60 Hz	C	.006
109	25.0	240 V ac, 60 Hz	D	.006
110	25.0	240 V ac, 400 Hz	E	.007
111	25.0	240 V ac, 400 Hz	F	.007
112	25.0	240 V ac, 400 Hz	G	.007
113	30.0	50 V dc	A	.005
114	30.0	50 V dc	B	.005
115	30.0	240 V ac, 60 Hz	C	.005
116	30.0	240 V ac, 60 Hz	D	.005
117	30.0	240 V ac, 400 Hz	E	.006
118	30.0	240 V ac, 400 Hz	F	.006
119	30.0	240 V ac, 400 Hz	G	.006

TABLE II. Circuit breaker dash numbers and applicable characteristics (configuration 2).

Dash no.	Current rating (amperes)	Voltage rating	Tripping time delay	Resistance or impedance ohms (max.)
001G	0.2	50 V dc	A	48
002G	0.2	50 V dc	B	48
003G	0.2	240 V ac, 60 Hz	C	42
004G	0.2	240 V ac, 60 Hz	D	42
005G	0.2	240 V ac, 400 Hz	E	88
006G	0.2	240 V ac, 400 Hz	F	88
007G	0.2	240 V ac, 400 Hz	G	88
008G	0.5	50 V dc	A	6
009G	0.5	50 V dc	B	6
010G	0.5	240 V ac, 60 Hz	C	6
011G	0.5	240 V ac, 60 Hz	D	6
012G	0.5	240 V ac, 400 Hz	E	13
013G	0.5	240 V ac, 400 Hz	F	13
014G	0.5	240 V ac, 400 Hz	G	13
015G	1.0	50 V dc	A	2
016G	1.0	50 V dc	B	2
017G	1.0	240 V ac, 60 Hz	C	2
018G	1.0	240 V ac, 60 Hz	D	2
019G	1.0	240 V ac, 400 Hz	E	4
020G	1.0	240 V ac, 400 Hz	F	4
021G	1.0	240 V ac, 400 Hz	G	4
022G	2.0	50 V dc	A	0.5
023G	2.0	50 V dc	B	0.5
024G	2.0	240 V ac, 60 Hz	C	0.5
025G	2.0	240 V ac, 60 Hz	D	0.5
026G	2.0	240 V ac, 400 Hz	E	0.8
027G	2.0	240 V ac, 400 Hz	F	0.8
028G	2.0	240 V ac, 400 Hz	G	0.8
029G	3.0	50 V dc	A	0.3
030G	3.0	50 V dc	B	0.3
031G	3.0	240 V ac, 60 Hz	C	0.3
032G	3.0	240 V ac, 60 Hz	D	0.3
033G	3.0	240 V ac, 400 Hz	E	0.5
034G	3.0	240 V ac, 400 Hz	F	0.5
035G	3.0	240 V ac, 400 Hz	G	0.5
036G	4.0	50 V dc	A	0.1
037G	4.0	50 V dc	B	0.1
038G	4.0	240 V ac, 60 Hz	C	0.1
039G	4.0	240 V ac, 60 Hz	D	0.1
040G	4.0	240 V ac, 400 Hz	E	0.3
041G	4.0	240 V ac, 400 Hz	F	0.3
042G	4.0	240 V ac, 400 Hz	G	0.3
043G	5.0	50 V dc	A	0.08
044G	5.0	50 V dc	B	0.08
045G	5.0	240 V ac, 60 Hz	C	0.08
046G	5.0	240 V ac, 60 Hz	D	0.08
047G	5.0	240 V ac, 400 Hz	E	0.15
048G	5.0	240 V ac, 400 Hz	F	0.15
049G	5.0	240 V ac, 400 Hz	G	0.15

TABLE II. Circuit breaker dash numbers and applicable characteristics (configuration 2) - Continued.

Dash no.	Current rating (amperes)	Voltage rating	Tripping time delay	Resistance or impedance ohms (max.)
050G	6.0	50 V dc	A	0.06
051G	6.0	50 V dc	B	0.06
052G	6.0	240 V ac, 60 Hz	C	0.06
053G	6.0	240 V ac, 60 Hz	D	0.06
054G	6.0	240 V ac, 400 Hz	E	0.09
055G	6.0	240 V ac, 400 Hz	F	0.09
056G	6.0	240 V ac, 400 Hz	G	0.09
057G	7.0	50 V dc	A	0.04
058G	7.0	50 V dc	B	0.04
059G	7.0	240 V ac, 60 Hz	C	0.04
060G	7.0	240 V ac, 60 Hz	D	0.04
061G	7.0	240 V ac, 400 Hz	E	0.07
062G	7.0	240 V ac, 400 Hz	F	0.07
063G	7.0	240 V ac, 400 Hz	G	0.07
064G	8.0	50 V dc	A	0.03
065G	8.0	50 V dc	B	0.03
066G	8.0	240 V ac, 60 Hz	C	0.03
067G	8.0	240 V ac, 60 Hz	D	0.03
068G	8.0	240 V ac, 400 Hz	E	0.06
069G	8.0	240 V ac, 400 Hz	F	0.06
070G	8.0	240 V ac, 400 Hz	G	0.06
071G	9.0	50 V dc	A	0.025
072G	9.0	50 V dc	B	0.025
073G	9.0	240 V ac, 60 Hz	C	0.02
074G	9.0	240 V ac, 60 Hz	D	0.02
075G	9.0	240 V ac, 400 Hz	E	0.05
076G	9.0	240 V ac, 400 Hz	F	0.05
077G	9.0	240 V ac, 400 Hz	G	0.05
078G	10.0	50 V dc	A	0.02
079G	10.0	50 V dc	B	0.02
080G	10.0	240 V ac, 60 Hz	C	0.02
081G	10.0	240 V ac, 60 Hz	D	0.02
082G	10.0	240 V ac, 400 Hz	E	0.04
083G	10.0	240 V ac, 400 Hz	F	0.04
084G	10.0	240 V ac, 400 Hz	G	0.04
085G	12.5	50 V dc	A	0.013
086G	12.5	50 V dc	B	0.013
087G	12.5	240 V ac, 60 Hz	C	0.015
088G	12.5	240 V ac, 60 Hz	D	0.015
089G	12.5	240 V ac, 400 Hz	E	0.03
090G	12.5	240 V ac, 400 Hz	F	0.03
091G	12.5	240 V ac, 400 Hz	G	0.03
092G	15.0	50 V dc	A	0.01
093G	15.0	50 V dc	B	0.01
094G	15.0	240 V ac, 60 Hz	C	0.011
095G	15.0	240 V ac, 60 Hz	D	0.011
096G	15.0	240 V ac, 400 Hz	E	0.02
097G	15.0	240 V ac, 400 Hz	F	0.02
098G	15.0	240 V ac, 400 Hz	G	0.02

TABLE II. Circuit breaker dash numbers and applicable characteristics (configuration 2) - Continued.

Dash no.	Current rating (amperes)	Voltage rating	Tripping time delay	Resistance or impedance ohms (max.)
099G	20.0	50 V dc	A	0.008
100G	20.0	50 V dc	B	0.008
101G	20.0	240 V ac, 60 Hz	C	0.007
102G	20.0	240 V ac, 60 Hz	D	0.007
103G	20.0	240 V ac, 400 Hz	E	0.01
104G	20.0	240 V ac, 400 Hz	F	0.01
105G	20.0	240 V ac, 400 Hz	G	0.01
106G	25.0	50 V dc	A	0.006
107G	25.0	50 V dc	B	0.006
108G	25.0	240 V ac, 60 Hz	C	0.006
109G	25.0	240 V ac, 60 Hz	D	0.006
110G	25.0	240 V ac, 400 Hz	E	0.007
111G	25.0	240 V ac, 400 Hz	F	0.007
112G	25.0	240 V ac, 400 Hz	G	0.007
113G	30.0	50 V dc	A	0.005
114G	30.0	50 V dc	B	0.005
115G	30.0	240 V ac, 60 Hz	C	0.005
116G	30.0	240 V ac, 60 Hz	D	0.005
117G	30.0	240 V ac, 400 Hz	E	0.006
118G	30.0	240 V ac, 400 Hz	F	0.006
119G	30.0	240 V ac, 400 Hz	G	0.006

TABLE III. Tripping-time delay (configuration 1). 1/

Time delay percent rated current	Tripping-time delay at 25°C ±2°C (tripping time in seconds)													
	50 V dc				240 V ac, 60 Hz				240 V ac, 400 Hz					
	A		B		C		D		E		F		G	
	Max	Min	Max	Min	Max	Min	Max	Min	Max	Min	Max	Min	Max	Min
100	no trip one hour		no trip one hour		no trip one hour		no trip one hour		no trip one hour		no trip one hour		no trip one hour	
125	70	7	7	.5	120	10	17	.7	N/A	N/A	N/A	N/A	N/A	N/A
150	N/A	N/A	N/A	N/A	N/A	N/A	N/A	N/A	60	5	5.8	.50	400	40
200	8	.6	1.4	.13	20	2.2	1.6	.13	20	2.1	1.9	.15	150	9.5
400	1.5	.15	.25	.031	2.3	.3	.25	.03	3.2	.4	.19	.02	19	1.9
600	.5	Inst	.12	Inst	.75	Inst	.13	Inst	.19	Inst	.08	Inst	1.6	Inst
800	.051	Inst	.051	Inst	.16	Inst	.07	Inst	.06	Inst	.05	Inst	.06	Inst
1,000	.026	Inst	.026	Inst	.04	Inst	.04	Inst	.045	Inst	.036	Inst	.043	Inst

See footnotes at end of table.

TABLE IV. Tripping-time delay (configuration 1) – Continued. 1/

Time delay percent rated current	Tripping-time delay at -40°C ±2°C and +85°C ±2°C (tripping time in seconds)													
	50 V dc				240 V ac, 60 Hz				240 V ac, 400 Hz					
	A		B		C		D		E		F		G	
	-40°C Max	+85°C Min	-40°C Max	+85°C Min	-40°C Max	+85°C Min	-40°C Max	+85°C Min	-40°C Max	+85°C Min	-40°C Max	+85°C Min	-40°C Max	+85°C Min
100	no trip one hour		no trip one hour		no trip one hour		no trip one hour		no trip one hour		no trip one hour		no trip one hour	
125	500	.5	100	.1	500	1	100	.1	N/A	N/A	N/A	N/A	N/A	N/A
150	N/A	N/A	N/A	N/A	N/A	N/A	N/A	N/A	500	.5	100	.1	1500	5
200	100	.1	10	.05	100	.05	10	.05	100	.1	10	.05	500	.5
400	20	Inst	3	Inst	20	Inst	3	Inst	20	Inst	3	Inst	100	Inst
600	5	Inst	1	Inst	5	Inst	1	Inst	5	Inst	1	Inst	5	Inst
800	2	Inst	.5	Inst	.5	Inst	.5	Inst	.5	Inst	.5	Inst	.5	Inst

1/ Circuit breakers shall not trip at 100 percent rated current. Delays A, B, C, and D must trip at 125 percent of rated current and delays E, F, and G must trip at 150 percent of rated current. Between 100 percent and 125 or 150 percent, they may trip. Instantaneous is defined as less than 15 milliseconds.

TABLE IV. Tripping-time delay (configuration 2). 1/

Time delay percent rated current	Tripping-time delay at 25˚C ±2˚C (tripping time in seconds)													
	50 V dc				240 V ac, 60 Hz				240 V ac, 400 Hz					
	A		B		C		D		E		F		G	
	Max	Min	Max	Min	Max	Min	Max	Min	Max	Min	Max	Min	Max	Min
100	no trip one hour		no trip one hour		no trip one hour		no trip one hour		no trip one hour		no trip one hour		no trip one hour	
125	60	7	6.5	0.5	120	10	12	0.7	N/A	N/A	N/A	N/A	N/A	N/A
150	N/A	N/A	N/A	N/A	N/A	N/A	N/A	N/A	70	5	8	0.5	400	40
200	10	0.6	1.2	0.13	20	2.2	3	0.13	25	2.1	1.9	0.15	150	9.5
400	2	0.15	0.5	0.031	3	0.3	1	0.03	5	0.4	0.4	0.02	19	1.9
600	1	Inst	0.25	Inst	2	Inst	0.3	Inst	2.4	Inst	0.25	Inst	7	Inst
800	0.5	Inst	0.1	Inst	0.8	Inst	0.15	Inst	1	Inst	0.1	Inst	0.4	Inst
1,000	0.1	Inst	Inst	Inst	0.25	Inst	0.1	Inst	0.1	Inst	0.05	Inst	0.043	Inst

See footnotes at end of table IV.

TABLE VI. Tripping-time delay (configuration 2) - Continued. 1/

Time delay percent rated current	Tripping-time delay at -40˚C ±2˚C and +85˚C ±2˚C (tripping time in seconds)													
	50 V dc				240 V ac, 60 Hz				240 V ac, 400 Hz					
	A		B		C		D		E		F		G	
	-40˚C Max	+85˚C Min	-40˚C Max	+85˚C Min	-40˚C Max	+85˚C Min	-40˚C Max	+85˚C Min	-40˚C Max	+85˚C Min	-40˚C Max	+85˚C Min	-40˚C Max	+85˚C Min
100	no trip one hour		no trip one hour		no trip one hour		no trip one hour		no trip one hour		no trip one hour		no trip one hour	
125	500	5	100	0.1	700	1	100	0.1	N/A	N/A	N/A	N/A	N/A	N/A
150	N/A	N/A	N/A	N/A	N/A	N/A	N/A	N/A	600	0.5	100	0.1	1500	5
200	100	0.1	10	0.05	160	0.05	10	0.05	130	0.1	10	0.05	500	0.5
400	20	Inst	3	Inst	26	Inst	3	Inst	32	Inst	3	Inst	100	Inst
600	5	Inst	1	Inst	13	Inst	1	Inst	26	Inst	1	Inst	24	Inst
800	2	Inst	0.5	Inst	2.8	Inst	0.5	Inst	8.4	Inst	0.5	Inst	3	Inst

1/ Circuit breakers shall not trip at 100 percent rated current. Delays A, B, C, and D must trip at 125 percent of rated current and delays E, F, and G must trip at 150 percent of rated current. Between 100 percent and 125 or 150 percent, they may trip. Instantaneous is defined as less than 15 milliseconds.

TABLE VII. Supersession and substitution data.

Circuit breakers covered by this specification sheet are substitutable for the manufacturer's PINs as shown below. This information in no way implies that the manufacturer's PIN is substitutable for the military PIN.

Superseding military PIN	Superseded manufacturers PIN	
M55629/9-XXX	CAGE 81541	CAGE 74193
	Type APG - 66 UPG - 66 IEG - 66	Type JA2
	The complete PIN consists of the type (above) plus identification codes for comparable internal connections, voltage, frequency, time delay and current rating.	

Reference documents. In addition to MIL-PRF-55629, this document references the following:

ASTM-B545 NASM35338

Amendment notations. The margins of this specification sheet are marked with vertical lines to indicate modifications generated by this amendment. This was done as a convenience only and the Government assumes no liability whatsoever for any inaccuracies in these notations. Bidders and contractors are cautioned to evaluate the requirements of this document based on the entire content irrespective of the marginal notations.

Custodians:
Army - CR
Navy - EC
Air Force - 85
DLA - CC

Review activities:
Army - AV, CR4, MI
Navy - AS, MC, OS, SH
Air Force - 19

Preparing activity:
Army - CR

Agent:
DLA - CC

(Project 5925-2021-014)

NOTE: The activities listed above were interested in this document as of the date of this document. Since organizations and responsibilities can change, you should verify the currency of the information above using the ASSIST Online database at https://assist.dla.mil/.