INCH-POUND
MIL-PRF-49467/5E
2 February 2024
SUPERSEDING
MIL-PRF-49467/5D
w/AMENDMENT 1
12 November 2018

PERFORMANCE SPECIFICATION SHEET

CAPACITOR, CERAMIC, MULTILAYER, HIGH VOLTAGE, 5,000 V DC, STYLE HV05

This specification sheet is approved for use by all Departments and Agencies of the Department of Defense.

The requirements for acquiring the product described herein shall consist of this specification sheet and MIL-PRF-49467.

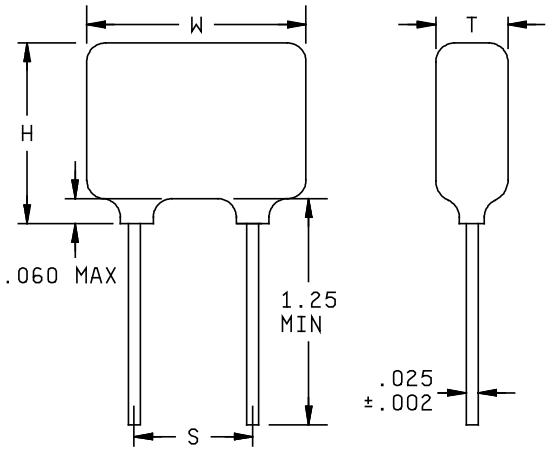

Case code	Sizes (max.)			Lead spacing
	Width (W)	Height (H)	Thickness (T)	± .030 (S)
E	.570	.500	.270	.475
F	.670	.600	.270	.575
G	.770	.720	.270	.675
J	1.250	.600	.270	1.100
K	1.450	.720	.270	1.300
M	.550	.280	.250	.400

Inches	mm	Inches	mm
.002	0.05	.575	14.61
.025	0.64	.600	15.24
.030	0.76	.670	17.02
.060	1.52	.675	17.15
.250	6.35	.720	18.29
.270	6.86	.770	19.56
.280	7.11	1.100	27.94
.400	10.16	1.250	31.75
.475	12.07	1.300	33.02
.500	12.70	1.450	36.83
.550	13.97	1.500	38.10
.570	14.48		

NOTES:
1. Dimensions are in inches.
2. Metric equivalents are in millimeters and are given for general information only.
3. H dimension includes meniscus.
4. S dimension shall be maintained from chip body to end of leads.

FIGURE 1. Capacitor style HV05.

AMSC N/A
FSC 5910

DISTRIBUTION STATEMENT A. Approved for public release. Distribution is unlimited.

REQUIREMENTS:

Dimensions and configuration: See figure 1.

Case type: Conformally coated, molded, or encapsulated.

Lead material: In accordance with MIL-PRF-49467.

Capacitance value: See table I.

Capacitance tolerance: J = ± 5 percent, K = ± 10 percent, M = ± 20 percent. See table I.

Operating temperature range: - 55°C to + 125°C.

Voltage rating: 5,000 V dc.

Dielectric types: BP, BR, and BZ in accordance with MIL-PRF-49467.

Temperature coefficient: 0 ± 30 ppm/°C (BP), ± 15 percent (BR, BZ).

Voltage-temperature limits: In accordance with MIL-PRF-49467.

Symbol	Capacitance change with reference to +25°C	
	Steps A through D of voltage-temperature limit cycle table of MIL-PRF-49467. Bias = 0 volt.	Steps E through G of voltage-temperature limit cycle table of MIL-PRF-49467.
BP	0 ± 30 ppm/°C	100 percent rated voltage: 0 ± 30 ppm/°C
BR	± 15 percent	100 percent rated voltage: + 15, - 40 percent
BZ	± 15 percent	60 percent rated voltage: + 15, - 45 percent

Dissipation factor (+25°C): 2.5 percent maximum (BR and BZ characteristic) or 0.1 percent maximum (BP characteristic), measured under the same conditions as capacitance.

Resistance to soldering heat: In accordance with MIL-PRF-49467.

Partial discharge (corona): In accordance with MIL-PRF-49467.

Radiographic inspection (molded and encapsulated case types only): In accordance with MIL-PRF-49467.

Part or Identifying Number (PIN). See table I.

Marking: In accordance with MIL-PRF-49467.

TABLE I. Capacitor characteristics.

PIN 1/	Capacitance	Capacitance tolerance	Characteristic	Case code
	(pF)			
M49467P05100-	10	J, K	BP	M
M49467P05120-	12	J, K	BP	M
M49467P05150-	15	J, K	BP	M
M49467P05180-	18	J, K	BP	M
M49467P05220-	22	J, K	BP	M
M49467P05270-	27	J, K	BP	M
M49467P05330-	33	J, K	BP	M
M49467P05390-	39	J, K	BP	M
M49467P05470-	47	J, K	BP	M
M49467P05560-	56	J, K	BP	M
M49467P05680-	68	J, K	BP	M
M49467P05820-	82	J, K	BP	M
M49467P05101-	100	J, K	BP	M
M49467R05101-	100	K, M	BR	M
M49467P05121-	120	J, K	BP	M
M49467R05121-	120	K, M	BR	M
M49467P05151-	150	J, K	BP	M
M49467R05151-	150	K, M	BR	M
M49467P05181-	180	J, K	BP	M
M49467R05181-	180	K, M	BR	M
M49467P05221-	220	J, K	BP	M
M49467R05221-	220	K, M	BR	M
M49467P05271-	270	J, K	BP	M
M49467R05271-	270	K, M	BR	M
M49467P05331-	330	J, K	BP	E
M49467R05331-	330	K, M	BR	M
M49467P05391-	390	J, K	BP	E
M49467R05391-	390	K, M	BR	M
M49467P05471-	470	J, K	BP	F
M49467R05471-	470	K, M	BR	M
M49467P05561-	560	J, K	BP	F
M49467R05561-	560	K, M	BR	M
M49467P05681-	680	J, K	BP	F
M49467R05681-	680	K, M	BR	E
M49467P05821-	820	J, K	BP	F
M49467R05821-	820	K, M	BR	E
M49467P05102-	1,000	J, K	BP	F
M49467R05102-	1,000	K, M	BR	E
M49467P05122-	1,200	J, K	BP	F
M49467R05122-	1,200	K, M	BR	E
M49467P05152-	1,500	J, K	BP	F
M49467R05152-	1,500	K, M	BR	E
M49467P05182-	1,800	J, K	BP	F
M49467R05182-	1,800	K, M	BR	E
M49467P05222-	2,200	J, K	BP	G
M49467R05222-	2,200	K, M	BR	E
M49467P05272-	2,700	J, K	BP	G
M49467R05272-	2,700	K, M	BR	F
M49467Z05272-	2,700	K, M	BZ	E
M49467P05332-	3,300	J, K	BP	G

See footnote at end of table.

TABLE I. Capacitor characteristics - Continued.

PIN 1/	Capacitance	Capacitance tolerance	Characteristic	Case code
	(pF)			
M49467R05332-	3,300	K, M	BR	F
M49467Z05332-	3,300	K, M	BZ	E
M49467P05392-	3,900	J, K	BP	K
M49467R05392-	3,900	K, M	BR	F
M49467Z05392-	3,900	K, M	BZ	E
M49467P05472-	4,700	J, K	BP	K
M49467R05472-	4,700	K, M	BR	F
M49467Z05472-	4,700	K, M	BZ	E
M49467R05562-	5,600	J, K	BP	K
M49467R05562-	5,600	K, M	BR	F
M49467Z05562-	5,600	K, M	BZ	F
M49467R05682-	6,800	K, M	BR	G
M49467Z05682-	6,800	K, M	BZ	F
M49467R05822-	8,200	K, M	BR	G
M49467Z05822-	8,200	K, M	BZ	G
	µF			
M49467R05103-	.01	K, M	BR	J
M49467Z05103-	.01	K, M	BZ	G
M49467R05123-	.012	K, M	BR	J
M49467Z05123-	.012	K, M	BZ	G
M49467R05153-	.015	K, M	BR	J
M49467Z05153-	.015	K, M	BZ	J
M49467R05183-	.018	K, M	BR	K
M49467Z05183-	.018	K, M	BZ	J
M49467R05223-	.022	K, M	BR	K
M49467Z05223-	.022	K, M	BZ	K
M49467Z05273-	.027	K, M	BZ	K

1/ The complete PIN shall include an additional letter to indicate the capacitance tolerance.

APPLICATION NOTES:

Additional encapsulation is necessary in applications where the possibility of a voltage breakdown between the leads of the capacitor, or between the capacitor and another potential, could occur.

Heat sinks on each lead or adequate preheating is required when these capacitors are installed in or removed from circuits by soldering iron.

Changes from previous issue: The margins of this specification are marked with vertical lines to indicate where changes from the previous issue were made. This was done as a convenience only and the Government assumes no liability whatsoever for any inaccuracies in these notations. Bidders and contractors are cautioned to evaluate the requirements of this document based on the entire content irrespective of the marginal notations and relationship to the previous issue.

Custodians:
Army - CR
Navy - EC
Air Force - 85
DLA - CC
Other - NA

Review activities:
Army - MI
Navy - MC
Air Force - 19

Preparing activity:
DLA - CC

(Project 5910-2024-013)

NOTE: The activities listed above were interested in this document as of the date of this document. Since organizations and responsibilities can change, you should verify the currency of the information above using ASSIST Online database at https://assist.dla.mil/.