INCH-POUND

MIL-PRF-49142/16A
23 August 2023
SUPERSEDING
MIL-PRF-49142/16
4 December 2019

PERFORMANCE SPECIFICATION SHEET

CONNECTOR, PLUG, ELECTRICAL, TRIAXIAL, MIL-STD-1553 DATABUS, (SERIES TRL, GENDER CHANGEABLE CONTACT , CLASS 2)

This specification is approved for use by all Departments and Agencies of the Department of Defense.

The requirements for acquiring the product described herein shall consist of this specification sheet and MIL-PRF-49142.

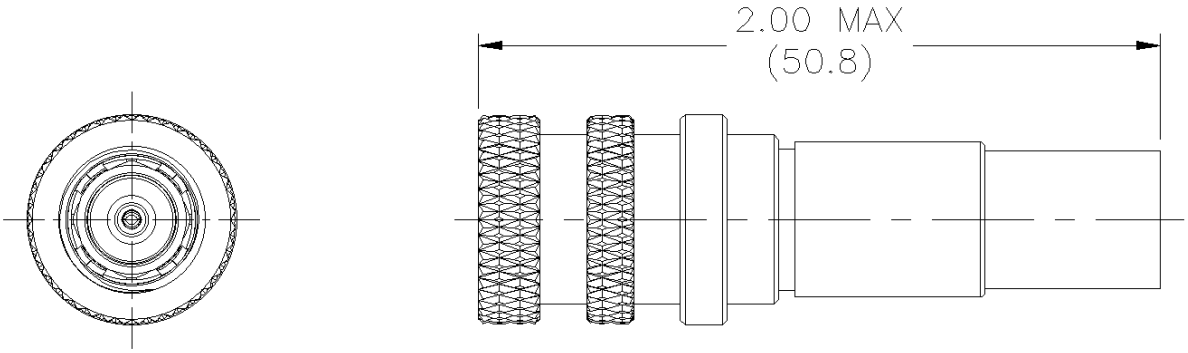

NOTES:
1. Dimensions are in inches.
2. Undimensioned pictorial representations for reference only.

FIGURE 1. General configuration.

DISTRIBUTION STATEMENT A. Approved for public release; distribution is unlimited.

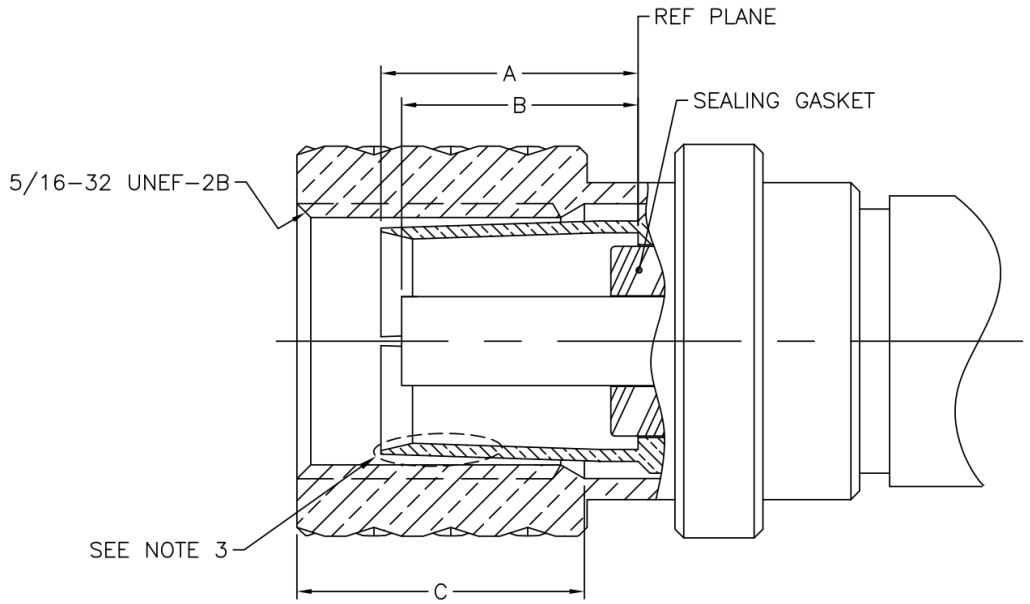

LTR	Inches	
	Min	Max
A	.281	.303
B	.222	.325
C	.197	-

NOTES:

1. Dimensions are in inches.
2. See Figure 3 and Figure 4 for signal contact polarity options.
3. Slot design of alignment fingers optional.

FIGURE 2. TRL plug interface dimensions.

ENGINEERING DATA:

Nominal impedance: Non-constant.

Signal range: Databus: MIL-STD-1553 databus frequency range.
RF Signaling: as required by the applicable system requirements.

Voltage rating:

At sea level: 400 V rms maximum working voltage.

At 70,000 feet (4.437 kPa): 100 V rms maximum working voltage.

Operating temperature -65°C to +125°C.

Storage temperature: -65°C to +125°C.

REQUIREMENTS:

Dimensions and configuration: See Figure 1 and Figure 2. Mating connector in accordance with MIL-PRF-49142/15.

Materials:

Insulators: PTFE fluorocarbon in accordance with ASTM D4894 or D4895, or POM in accordance with ASTM D6778.

Alternate insulators: ETFE per ASTM D3159 or PES that meet the requirements and pass the tests in Table I.

Key material properties of Polyethersulfone (PES):

Table I.

Characteristics	Typical Value	ASTM Test Method
Specific Gravity	1.37	D792
Water Absorption, 24hrs @ 23 °C	0.54 %	D570
Tensile Strength	12000 psi (83 MPa)	D638
Tensile Elongation	30 %	D638
Tensile Modulus	0.39 x 106 psi (2689 MPa)	D638
Dielectric Strength	380 V/mil (15.0 KV/mm)	D149
Deflection Temperature @ 264 psi (1820 KPa)	398 °F (203 °C)	D648

Connector bodies: Brass in accordance with ASTM B16/B16M, ASTM B36/B36M or ASTM B121/B121M. Or copper beryllium in accordance with ASTM B194, ASTM B196/B196M or ASTM B197/B197M

All other components: In accordance with MIL-PRF-49142.

Force to engage and disengage:

Longitudinal force: Not applicable.

Torque: 2.5-inch pounds (.28 Nm) maximum.

Coupling proof torque: 10 inch-pounds (1.13 Nm) minimum.

Mating characteristics: See Figure 2, Figure 3 and Figure 4 for dimensions and force testing.

Signal Contact, Pin:

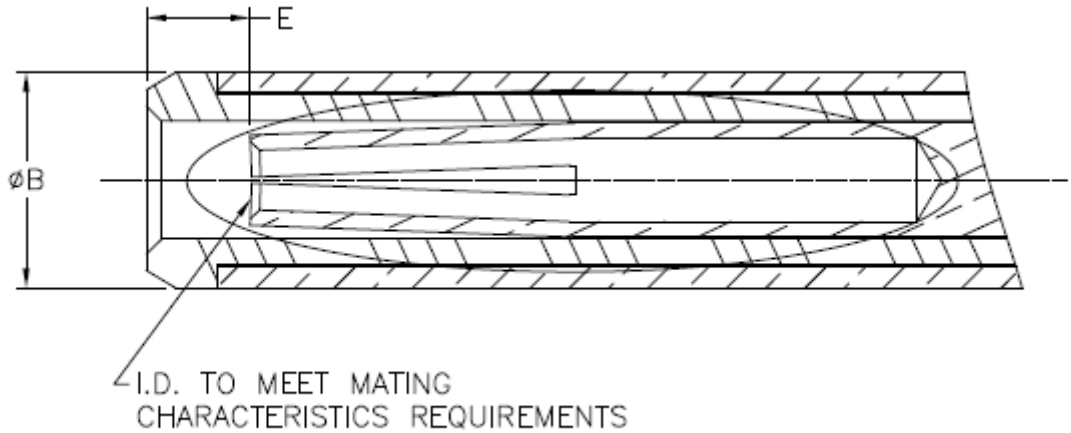

LTR	Inches	
	Min	Max
B	.072	.074
E	.040	.061

FIGURE 3. Pin Interface dimensions.

Center contact (socket):

Steel test pin finish: 16 micorinches.
Insertion depth: .050 inches minimum.
Oversize test pin: .025 inches diameter minimum.
Number of insertions: 1.

Insertion force test:

Steel test pin diameter: .0245 inches minimum.
Insertion force: 1 pounds (4.45 N) maximum.

Withdraw force test:

Steel test pin diameter: .0235 inches maximum.
Withdrawal force: 0.5 ounces (.14 N) minimum.

Signal Contact, Socket:

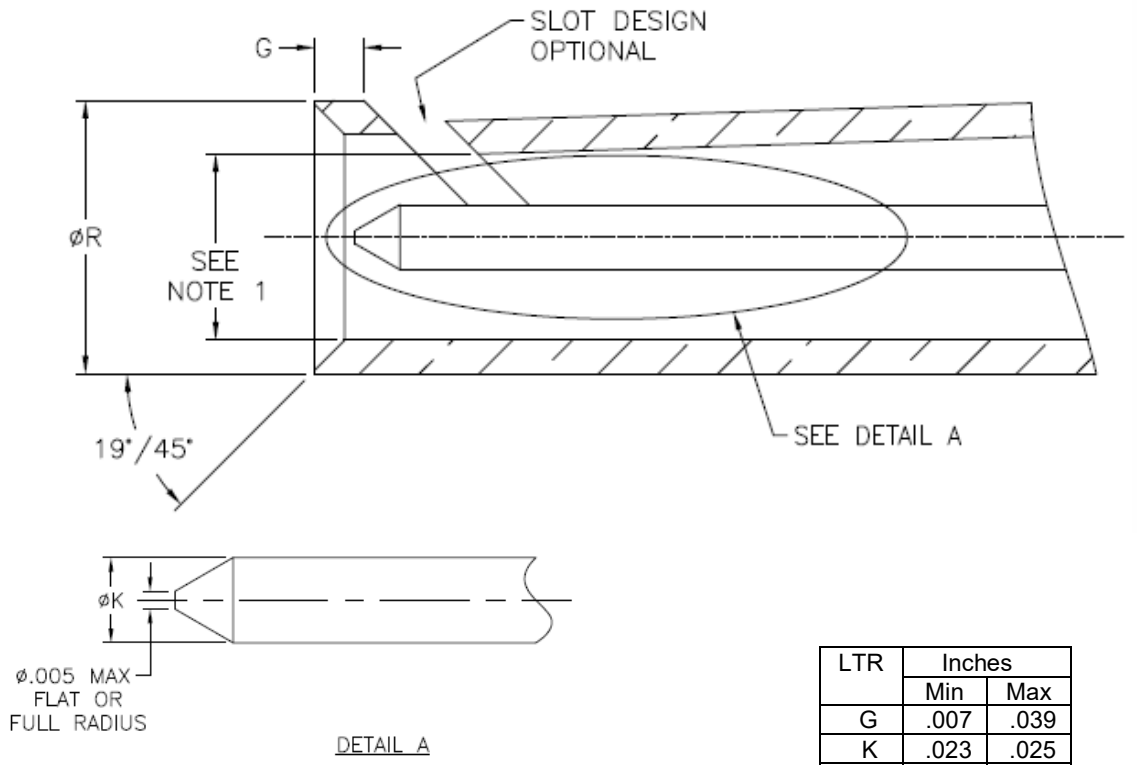

LTR	Inches	
	Min	Max
G	.007	.039
K	.023	.025
R	-	.107

Note 1: Set to meet the engagement and separation force.

FIGURE 4. Socket Interface dimensions.

Intermediate contact (socket):

Steel test pin finish: 16 microinches.
Insertion depth: .125 inches minimum.
Oversize test pin: .075 inches diameter minimum.

Number of insertions: 1.

Insertion force test:

Steel test pin diameter: .074 inches minimum.
Insertion force: 1.25 pounds (5.56 N) maximum.

Withdraw force test:

Steel test pin diameter: .072 inches maximum.
Withdrawal force: 2.0 ounces (.56 N) minimum.

Permeability: Applicable.

Hermetic seal: Not applicable.

Leakage: Not applicable.

Insulation resistance:

Center conductor to intermediate conductor: 5,000 megohms minimum.

Intermediate conductor to outer conductor: 5,000 megohms minimum.

Conductor retention:

Center conductor retention: 2 pounds (8.90 N) minimum axial force.

Intermediate conductor retention: 6 pounds (26.69 N) minimum axial force.

Dielectric withstanding voltage at sea level:

Center conductor to intermediate conductor: 900 V rms minimum.

Intermediate conductor to outer conductor: 900 V rms minimum.

Salt spray (corrosion): Applicable.

Vibration: Applicable.

Shock: Applicable.

Thermal shock: Applicable.

Moisture resistance: Applicable.

Conductor resistance: In milliohms, maximum.

	Initial	After environment
Center conductor:	6.0	8.0
Intermediate conductor	3.0	5.0
Outer conductor (nickel plated)	5.0	8.0

Corona level: Not applicable.

RF high potential withstanding voltage: Not applicable.

Cable retention force (for cable outside diameter):

.154 inch (3.93 mm) and smaller: Not applicable

.155 - .189 inch (3.94 – 4.82 mm): 10 pounds (44.48 N) minimum.

.190 - .229 inch (4.83 – 5.83 mm): 20 pounds (88.96 N) minimum.

.230 - .249 inch (5.84 – 6.34 mm): 30 pounds (133.45 N) minimum.

.250 inch (6.35 mm) and larger: 40 pounds (177.93 N) minimum.

Coupling mechanism retention force: 100 pounds (444.82 N) minimum.

Rise time degradation:

Twin conductor cable: 100ns when tested in accordance with MIL-STD-1553 paragraph 4.5.2.1.1.2.

Triaxial cable: Applicable.

NOTE: Triaxial cable approved for use in RF applications.

Connector durability: 500 cycles minimum at 12 cycles per minute maximum.

RF leakage: Not applicable.

Part identifying number (PIN): M49142/16- X - X X - XX - X

Body material finish from Table 2

Configuration from Table 3

Gender from Figure 3 or 4 (P=Pin, S=Socket)

Dash number from Table 4

Termination Type from Table 5

Table 2. Body material finish and finish.

Part identifying number (PIN): M49142/16- A-XX-XX-X	
0	silver plated brass
3	passivated corrosion resistant steel
4	tin plated brass
5	tin/nickel plated beryllium copper
6	tin plated beryllium copper
7	nickel plated brass

Table 3. Configuration.

Part identifying number (PIN): M49142/16- X-AX-XX-X	
1	In-line Cable

Table 4. Dash Number.

Part identifying number (PIN): M49142/16- X-XX-AA-X	
00	Not applicable
01	M17/176-00001
02	10602 or 10612 Raychem
03	TWC-78 Trompeter
04	10613 Raychem
05	10614 Raychem
99	Per contract

Table 5. Termination Type.

Part identifying number (PIN): M49142/16- X-XX-XX-A	
C	Crimping
S	Pre-installed Soldering

NOTE: Components for Type C and Type S are intermateable but not interchangeable.

Changes from previous issue. The margins of this specification are marked with vertical lines to indicate where changes from the previous issue were made. This was done as a convenience only and the Government assumes no liability whatsoever for any inaccuracies in these notations. Bidders and contractors are cautioned to evaluate the requirements of this document based on the entire content irrespective of the marginal notations and relationship to the previous issue.

Referenced documents. In addition to MIL-PRF-49142, this document references the following:

MIL-PRF-49142/15	ASTM B121/B121M	ASTM D4894
MIL-STD-1553	ASTM B194	ASTM D4895
M17/176	ASTM B196/B196M	ASTM D6778
ASTM B16/B16M	ASTM B197/B197M	ASTM D3159
ASTM B36/B36M		

CONCLUDING MATERIAL

Custodians:
Army - CR
Navy - EC
Air Force - 85
NASA - NA
DLA - CC

Review activities:
Army - AR, AT
Navy - AS, MC, OS
Air Force – 19

Preparing activity:
DLA - CC

(Project 5935-2023-049)

NOTE: The activities listed above were interested in this document as of the date of this document. Since organizations and responsibilities can change, you should verify the currency of the information above using the ASSIST Online database at https://assist.dla.mil.