INCH-POUND

MIL-PRF-39019/4H
w/AMENDMENT 1
5 March 2025

SUPERSEDING
MIL-PRF-39019/4H
14 May 2010

PERFORMANCE SPECIFICATION SHEET

CIRCUIT BREAKERS, MAGNETIC, LOW-POWER, SEALED, TRIP-FREE TWO-POLE, AUXILIARY CONTACTS

This specification is approved for use by all Departments and Agencies of the Department of Defense.

The requirements for acquiring the product described herein shall consist of this specification sheet and MIL-PRF-39019.

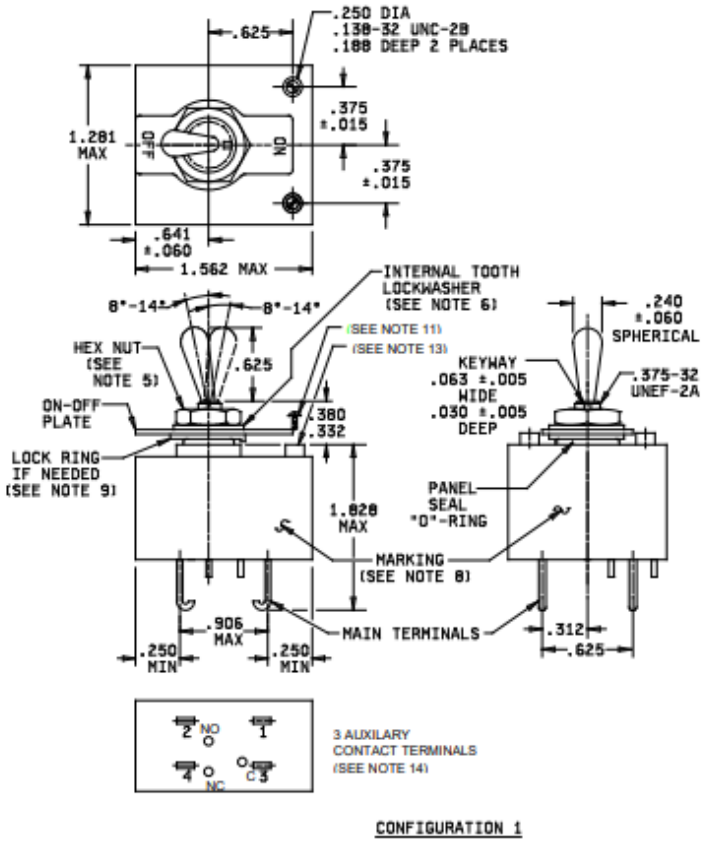

FIGURE 1. Circuit breaker configuration.

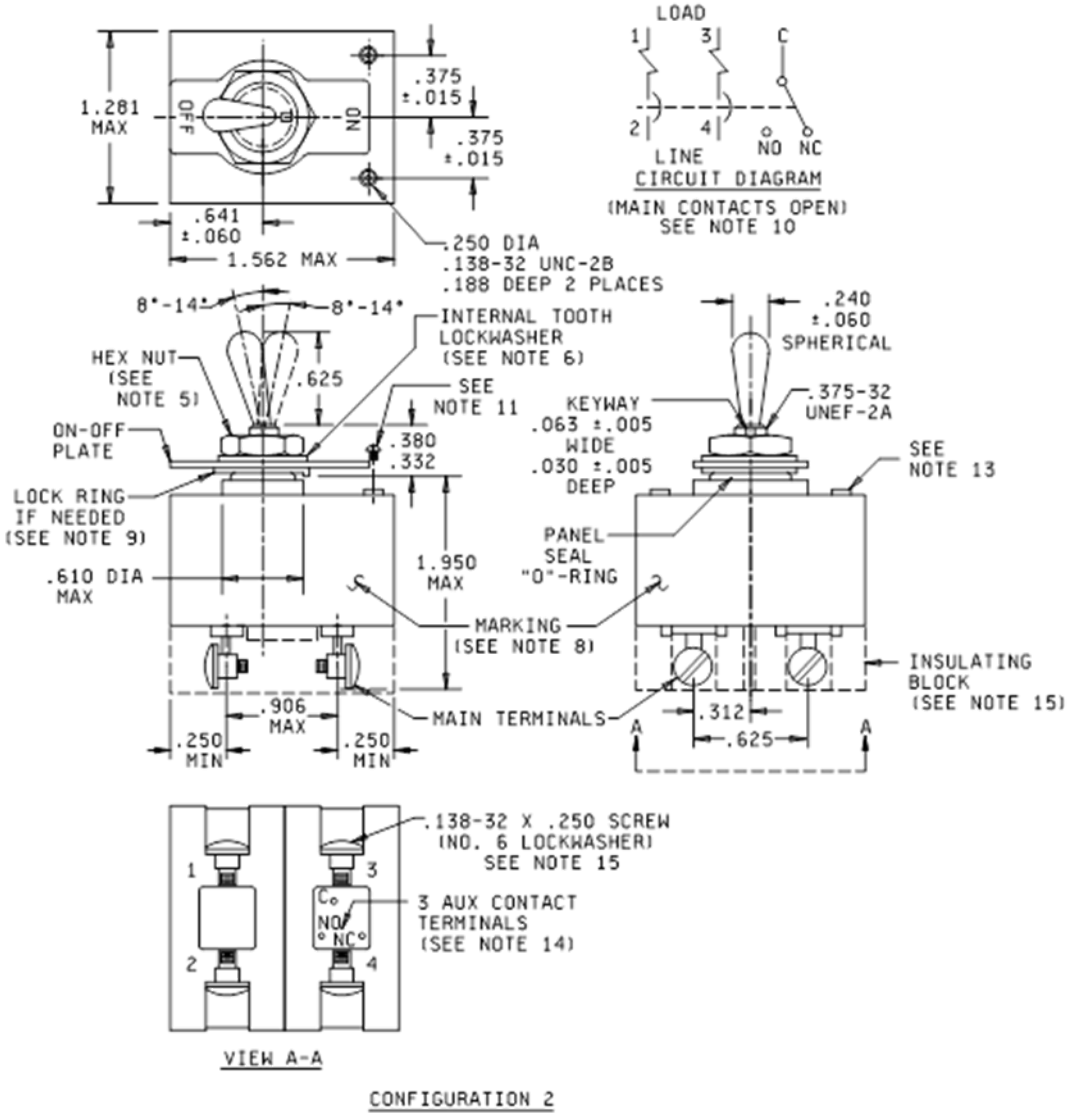

FIGURE 1. Circuit breaker configuration - Continued.

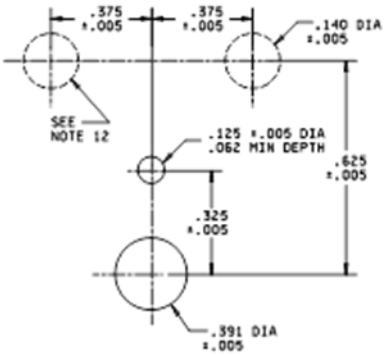

PANEL MOUNTING DETAIL

Inches	mm	Inches	mm	Inches	mm	Inches	mm	Inches	mm
.005	0.13	.125	3.18	.312	7.92	.391	9.93	.641	16.28
.015	0.38	.138	3.51	.325	8.26	.392	9.96	.906	23.01
.030	0.76	.140	3.56	.332	8.43	.493	12.52	1.281	32.54
.060	1.52	.188	4.78	.375	9.52	.507	12.88	1.562	39.67
.062	1.57	.240	6.10	.380	9.65	.610	15.49	1.828	46.43
.063	1.60	.250	6.35	.382	9.70	.625	15.88	1.950	49.53

NOTES:

1. Dimensions are in inches.
2. Metric equivalents are given for general information only.
3. Unless otherwise specified, tolerance is ±.031 (0.79 mm).
4. The shape of the circuit breaker is shown for information only. Slight deviations from this outline drawing, which do not alter the functional aspect of the device, are acceptable.
5. Hex mounting nut .375-32 UNEF-2B thread, .093 ±.005 (2.36 mm ±0.13 mm) thick or equivalent MS25082-20, -B20.
6. Internal tooth lockwasher, .507/.493 O.D., .392/.382 I.D., .025 ±.005 (0.64 mm ±0.13mm) thick, stainless steel or equivalent AIA/NAS NASM35333-134.
7. The effective bushing thread length (not including mounting hardware) is .280 (7.11 mm) minimum.
8. Marking may appear on any surface except the mounting surface.
9. Lock ring not required if on-off plate has locking tab.
10. Numerical marking optional on circuit diagram.
11. Sealscrew, .138-32 UNC-2A x .312 (7.92 mm) long, stainless steel number 18-8 (type 347) MS35265-25 or equivalent with appropriate O-rings. O-rings should be chosen to enable the circuit breaker to meet the performance requirements of this specification. Possible source: AMP Hexseal Corporation.
12. Use of panel screws will enhance circuit breaker shock and vibration characteristics.
13. Threaded inserts exceed height of bushing by .005 to .015 (0.13 mm to 0.38 mm).
14. Auxiliary contact terminals shall be located on the back side of the circuit breaker (same surface as main terminals), but otherwise their location, style, and form shall be optional, consistent with dimensional or other specified requirements. Auxiliary contact terminals shall accommodate two number 20 AWG wires.
15. For configuration 2 add "S" at end of dash number for screw terminals with insulating block (see table I). When circuit breakers are subjected to the resistance to solvents test, the insulating block shall be removed and shall not be tested. Main terminal screw MS35265-26 or equivalent.

FIGURE 1. Circuit breaker configuration - Continued.

REQUIREMENTS:

Dimensions and configuration: See figure 1 and note 15.

Weight: For reference only, approximately 100 grams.

Mounting hardware: See figure 1.

Terminals: See figure 1.

Voltage and frequency rating: 50 V dc, maximum and 240 V ac, maximum at 60 Hz and 400 Hz.

High inrush: 800 percent at 60 Hz and dc, 1,400 percent at 400 Hz (see table I).

Current rating: See table I.

Circuit diagram: See figure 1.

Time delay: See table I.

Resistance or impedance: See table I.

Part or Identifying Number (PIN): The PIN shall be M39019/04-(dash number taken from table I) (e.g., M39019/04-200, M39019/04-200S).

Cross reference: See table II.

TABLE I. Circuit breaker dash numbers and applicable characteristics.

Dash number 1/		Current rating (amps)	Time delay	Resistance or impedance (ohms - max) 2/		
Standard delay	High inrush			DC	60 Hz	400 Hz
200	300	0.05	A	680.0	690.0	710.0
201	301	0.05	B	680.0	690.0	710.0
202	- - -	0.05	C	680.0	690.0	710.0
203	302	0.1	A	150.0	170.0	180.0
204	303	0.1	B	150.0	170.0	180.0
205	- - -	0.1	C	150.0	170.0	180.0
206	304	0.25	A	20.0	26.0	27.0
207	305	0.25	B	20.0	26.0	27.0
208	- - -	0.25	C	20.0	26.0	27.0
209	306	0.5	A	5.4	6.0	6.6
210	307	0.5	B	5.4	6.0	6.6
211	- - -	0.5	C	5.4	6.0	6.6
212	308	0.75	A	2.5	2.7	2.8
213	309	0.75	B	2.5	2.7	2.8
214	- - -	0.75	C	2.5	2.7	2.8
215	310	1.0	A	1.35	1.5	1.61

See footnotes at end of table.

TABLE I. Circuit breaker dash numbers and applicable characteristics - Continued.

Dash number 1/		Current rating (amps)	Time delay	Resistance or impedance (ohms - max) 2/		
Standard delay	High inrush			DC	60 Hz	400 Hz
216	311	1.0	B	1.35	1.5	1.61
217	- - -	1.0	C	1.35	1.5	1.61
218	312	2.0	A	0.40	0.40	0.50
219	313	2.0	B	0.40	0.40	0.50
220	- - -	2.0	C	0.40	0.40	0.50
221	314	2.5	A	0.25	0.25	0.27
222	315	2.5	B	0.25	0.25	0.27
223	- - -	2.5	C	0.25	0.25	0.27
224	316	3.0	A	0.15	0.15	0.17
225	317	3.0	B	0.15	0.15	0.17
226	- - -	3.0	C	0.15	0.15	0.17
227	318	4.0	A	0.10	0.10	0.12
228	319	4.0	B	0.10	0.10	0.12
229	- - -	4.0	C	0.10	0.10	0.12
230	320	5.0	A	0.061	0.063	0.072
231	321	5.0	B	0.061	0.063	0.072
232	- - -	5.0	C	0.061	0.063	0.072
233	322	6.0	A	0.042	0.043	0.050
234	323	6.0	B	0.042	0.043	0.050
235	- - -	6.0	C	0.042	0.043	0.050
236	324	7.0	A	0.036	0.036	0.040
237	325	7.0	B	0.036	0.036	0.040
238	- - -	7.0	C	0.036	0.036	0.040
239	326	7.5	A	0.031	0.031	0.038
240	327	7.5	B	0.031	0.031	0.038
241	- - -	7.5	C	0.031	0.031	0.038
242	328	8.0	A	0.027	0.028	0.035
243	329	8.0	B	0.027	0.028	0.035
244	- - -	8.0	C	0.027	0.028	0.035
245	330	9.0	A	0.022	0.022	0.028
246	331	9.0	B	0.022	0.022	0.028
247	- - -	9.0	C	0.022	0.022	0.028
248	332	10.0	A	0.018	0.021	0.024
249	333	10.0	B	0.018	0.021	0.024
250	- - -	10.0	C	0.018	0.021	0.024

See footnotes at end of table.

TABLE I. Circuit breaker dash numbers and applicable characteristics - Continued.

Dash number 1/		Current rating (amps)	Time delay	Resistance or impedance (ohms - max) 2/		
Standard delay	High inrush			DC	60 Hz	400 Hz
251	334	12.5	A	0.012	0.013	0.015
252	335	12.5	B	0.012	0.013	0.015
253	- - -	12.5	C	0.012	0.013	0.015
254	336	15.0	A	0.009	0.009	0.010
255	337	15.0	B	0.009	0.009	0.010
256	- - -	15.0	C	0.009	0.009	0.010
257	338	20.0	A	0.006	0.006	0.007
258	339	20.0	B	0.006	0.006	0.007
259	- - -	20.0	C	0.006	0.006	0.007
260	340	1.25	A	0.9	1.0	1.1
261	341	1.25	B	0.9	1.0	1.1
262	- - -	1.25	C	0.9	1.0	1.1
263	342	1.5	A	0.65	0.70	0.75
264	343	1.5	B	0.65	0.70	0.75
265	- - -	1.5	C	0.65	0.70	0.75

1/ For configuration 2, add "S" at end of dash number.
2/ The corresponding maximum wattage losses, which in no case shall exceed 3.0 watts, may be calculated as I^2R or I^2Z.

TABLE II. Cross reference of superseded part numbers.

Superseded MIL-C-39019/4B part number M39019/4-	New part number M39019/04-	Superseded MIL-C-39019/4B part number M39019/4-	New part number M39019/04-	Superseded MIL-C-39019/4B part number M39019/4-	New part number M39019/04-
1	200	41	230	81	218
2	201	42	231	82	219
3	200	43	230	83	218
4	201	44	231	84	219
5	200	45	230	85	218
6	201	46	231	86	219
7	200	47	230	87	227
8	201	48	231	88	228
9	200	49	230	89	227
10	201	50	231	90	228
11	209	51	248	91	227
12	210	52	249	92	228
13	209	53	248	93	233
14	210	54	249	94	234
15	209	55	248	95	233
16	210	56	249	96	234
17	209	57	248	97	233
18	210	58	249	98	234
19	209	59	248	99	236
20	210	60	249	100	237
21	215	61	254	101	236
22	216	62	255	102	237
23	215	63	254	103	236
24	216	64	255	104	237
25	215	65	254	105	242
26	216	66	255	106	243
27	215	67	254	107	242
28	216	68	255	108	243
29	215	69	254	109	242
30	216	70	255	110	243
31	224	71	257	111	245
32	225	72	258	112	246
33	224	73	257	113	245
34	225	74	258	114	246
35	224	75	257	115	245
36	225	76	258	116	246
37	224	77	257	117	251
38	225	78	258	118	252
39	224	79	257	119	251
40	225	80	258	120	252
				121	251
				122	252

Referenced documents. In addition to MIL-PRF-39019, this specification sheet references the following documents:
MS25082
AIA/NAS NASM35333
MS35265

Amendment notations. The margins of this specification sheet are marked with vertical line to indicate modifications generated by this amendment. This was done as a convenience only and the Government assumes no liability whatsoever for any inaccuracies in these notations. Bidders and contractors are cautioned to evaluate the requirements of this document based on the entire content irrespective of the marginal notations.

Custodians:
Army - CR
Navy - EC
Air Force - 85
DLA - CC

Review activities:
Army - AT, AV, MI
Navy - AS, MC
Air Force - 19

Preparing activity:
DLA - CC

(Project 5925-2025-005)

NOTE: The activities listed above were interested in this document as of the date of this document. Since organizations and responsibilities can change, you should verify the currency of the information above using the ASSIST Online database at https://assist.dla.mil/.