INCH-POUND
MIL-PRF-39018/2G
9 August 2021
SUPERSEDING
MIL-PRF-39018/2F
20 February 2009

PERFORMANCE SPECIFICATION SHEET

CAPACITOR, FIXED, ELECTROLYTIC (ALUMINUM OXIDE)(NONPOLARIZED), STYLES CU14 (UNINSULATED) AND CU15 (INSULATED)

STYLE CU14 INACTIVE FOR
DESIGN AFTER 23 MARCH 1972

This specification sheet is approved for use by all Departments and Agencies of the Department of Defense.

The requirements for acquiring the product described herein shall consist of this specification sheet and MIL-PRF-39018.

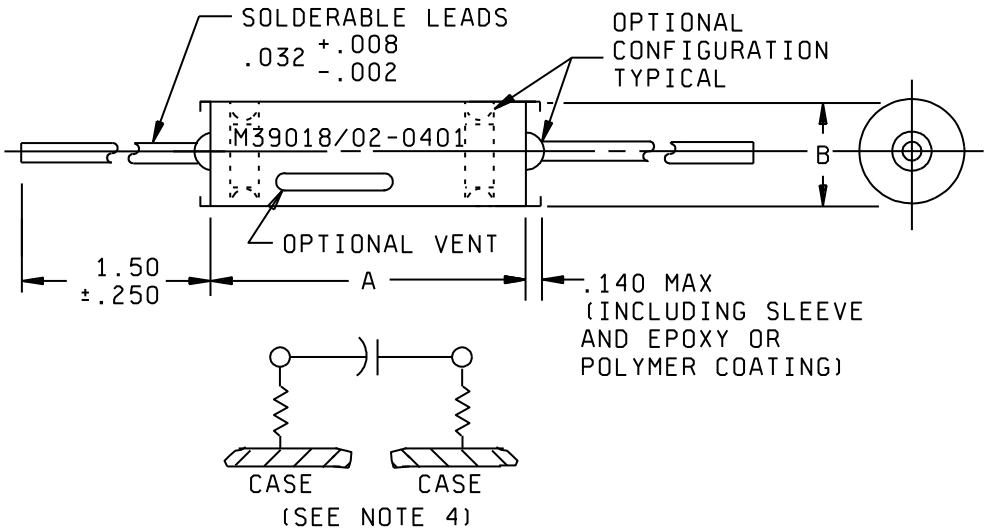

FIGURE 1. Styles CU14 and CU15 capacitors.

DISTRIBUTION STATEMENT A. Approved for public release. Distribution is unlimited.

Case size	Dimensions	
	A ± .031 inch	B ± .015 inch (see note 5)
A0	.938	.281
A7	1.438	.375
A8	2.125	.375
A9	2.750	.375

Inches	mm	Inches	mm
.002	0.05	.281	7.14
.008	0.20	.375	9.52
.015	0.38	.938	23.83
.031	0.79	1.438	36.53
.032	0.81	1.500	38.10
.140	3.56	2.125	53.97
.250	6.35	2.750	69.85

NOTES:
1. Dimensions are in inches.
2. Metric equivalents are in millimeters and are given for general information only.
3. These capacitors are not intended to be mounted by their leads.
4. There is an indeterminate resistance between terminal and case. Optional configuration may allow that one lead be connected to the case (single ended construction).
5. The “B” dimension for style CU15 shall not be more than .008 inch (0.20 mm) larger than the specified bare case diameter.

FIGURE 1. Styles CU14 and CU15 capacitors - Continued.

REQUIREMENTS:

Dimensions and configuration: See figure 1.

Case:

Type: Tubular.

Material: Metal.

Leads: See figure 1.

DC rated voltage: See table I.

Capacitance value: See table I.

Capacitance tolerance: See table I.

Operating temperature: -55°C to +85°C derated to +125°C (see table I).

DC leakage: See table I.

Equivalent series resistance (ESR): See table I.

Low temperature exposure:

DCL: See table I.

ΔC: See table I.

ESR: See table I.

TABLE I. Styles CU14 and CU15 capacitors.

DC rated voltage		Cap.	DC surge voltage		ESR		Max. Imped. at -55°C and 120 Hz	DC leakage		Case size	Dash number Style CU14 Cap. tolerance (percent)			Dash number Style CU15 Cap. tolerance (percent)		
+85°C	+125°C		+85°C	+125°C	+25°C	+85°C and +125°C		+25°C	+85°C and +125°C		-10 +30	-10 +50	-10 +75	-10 +30	-10 +50	-10 +75
volts		µF	volts		Ω		Ω	µA								
7	5	47	10	7	5.64	7.05	64	4	12	A0	0401	---	0501	0601	---	0701
7	5	220	10	7	1.21	1.51	14	10	30	A7	0402	---	0502	0602	---	0702
7	5	470	10	7	0.56	0.71	6.4	16	48	A8	0403	---	0503	0603	---	0703
7	5	680	10	7	0.39	0.49	4.4	24	72	A9	0404	---	0504	0604	---	0704
10	7	39	15	10	6.80	8.50	77	4	12	A0	0405	---	0505	0605	---	0705
10	7	180	15	10	1.47	1.84	17	10	30	A7	0406	---	0506	0606	---	0706
10	7	330	15	10	0.80	1.00	9.1	16	48	A8	0407	---	0507	0607	---	0707
10	7	470	15	10	0.56	0.71	6.4	24	72	A9	0408	---	0508	0608	---	0708
15	10	33	20	15	8.04	10.05	91	4	12	A0	0409	---	0509	0609	---	0709
15	10	120	20	15	2.21	2.76	25	9	27	A7	0410	---	0510	0610	---	0710
15	10	150	20	15	1.77	2.21	20	10	30	A7	0411	---	0511	0611	---	0711
15	10	270	20	15	0.98	1.23	11	16	48	A8	0412	---	0512	0612	---	0712
15	10	390	20	15	0.68	0.85	7.7	24	72	A9	0413	---	0513	0613	---	0713
30	20	15	40	30	17.68	22.10	130	5	15	A0	0414	---	0514	0614	---	0714
30	20	56	40	30	4.74	5.92	36	9	27	A7	0415	---	0515	0615	---	0715
30	20	68	40	30	3.90	4.88	30	10	30	A7	0416	---	0516	0616	---	0716
30	20	120	40	30	2.21	2.76	17	15	45	A8	0417	---	0517	0617	---	0717
30	20	150	40	30	1.77	2.21	13	16	48	A8	0418	---	0518	0618	---	0718
30	20	180	40	30	1.47	1.84	11	24	72	A9	0419	---	0519	0619	---	0719
50	40	6.8	60	50	19.50	39.01	300	6	18	A0	0420	---	0520	0620	---	0720
50	40	27	60	50	4.91	9.82	74	10	30	A7	0421	---	0521	0621	---	0721
50	40	56	60	50	2.37	4.74	36	16	48	A8	0422	---	0522	0622	---	0722
50	40	82	60	50	1.62	3.23	23	24	72	A9	0423	---	0523	0623	---	0723
75	60	3.9	90	75	34.01	68.01	510	7	21	A0	0424	---	0524	0624	---	0724
75	60	15	90	75	8.84	17.68	130	10	30	A7	0425	---	0525	0625	---	0725
75	60	18	90	75	7.37	14.74	110	11	33	A7	0426	---	0526	0626	---	0726
75	60	39	90	75	3.40	6.80	51	16	48	A8	0427	---	0527	0627	---	0727
75	60	56	90	75	2.37	4.74	36	24	72	A9	0428	---	0528	0628	---	0728
100	75	2.2	125	100	60.29	120.57	910	8	12	A0	0429	0529	---	0629	0729	---
100	75	12	125	100	11.05	22.10	170	16	48	A7	0430	0530	---	0630	0730	---
100	75	22	125	100	6.03	12.06	91	18	54	A8	0431	0531	---	0631	0731	---
100	75	33	125	100	4.02	8.04	61	28	84	A9	0432	0532	---	0632	0732	---
150	100	1.8	175	125	73.68	147.37	1100	10	30	A0	0433	0533	---	0633	0733	---
150	100	5.6	175	125	23.68	47.37	360	14	42	A7	0434	0534	---	0634	0734	---
150	100	8.2	175	125	16.17	32.35	230	16	48	A7	0435	0435	---	0635	0735	---
150	100	12	175	125	11.05	22.10	170	18	54	A8	0436	0536	---	0636	0736	---
150	100	15	175	125	8.84	17.68	130	20	60	A8	0437	0537	---	0637	0737	---
150	100	22	175	125	6.03	12.06	91	28	84	A9	0438	0538	---	0638	0738	---
200	150	1.0	225	175	132.63	265.26	2000	12	36	A0	0439	0539	---	0639	0739	---
200	150	4.7	225	175	28.22	56.44	400	20	60	A7	0440	0540	---	0640	0740	---
200	150	10	225	175	13.26	26.53	200	24	72	A8	0441	0541	---	0641	0741	---
200	150	15	225	175	8.84	17.68	130	32	96	A9	0442	0542	---	0642	0742	---
250	200	0.68	275	225	290.00	390.09	3000	14	42	A0	0443	0543	---	0643	0743	---
250	200	3.3	275	225	40.19	80.38	610	22	66	A7	0444	0544	---	0644	0744	---
250	200	6.8	275	225	19.50	39.01	300	26	78	A8	0445	0545	---	0645	0745	---
250	200	10	275	225	13.26	26.53	200	36	108	A9	0446	0546	---	0646	0746	---

Solderability: In accordance with MIL-PRF-39018.

Terminal strength: MIL-STD-202-211, test condition A (3 pounds) and test condition D (3 rotations).

Stability at reduced and high temperature:

Step 1 (at +25°C):

DCL: See table I.

ΔC: See table I.

ESR: See table I.

Step 2 (at -55°C):

Impedance: See table I.

ΔC: Within 30 percent of step 1 value.

Step 3 (at +25°C):

DCL: See table I.

ΔC: Within 5 percent of step 1 value.

ESR: See table I.

Step 4 (at +125°C):

DCL: See table I.

ΔC: Within 25 percent of step 1 value.

ESR: See table I.

Step 5 (at +25°C):

DCL: See table I.

ΔC: Within 5 percent of step 1 value.

ESR: See table I.

Life: MIL-STD-202-108.

For qualification: Condition F (2,000 hours) at +85°C.

DCL: See table I.

ΔC: Within 15 percent of initial measured value.

ESR: Not more than 130 percent of initial requirement.

For conformance: Performance check, condition B (250 hours) at +85°C.

DCL: See table I.

ΔC: Within 10 percent of initial measured value.

ESR: See table I.

For conformance: Continuation test (1,750 hours) at +85°C.

DCL: See table I.

ΔC: Within 15 percent of initial measured value.

ESR: Not more than 130 percent of initial requirement.

Vibration:

High frequency: In accordance with MIL-PRF-39018.

Thermal shock and immersion:

Thermal shock: MIL-STD-202-107, condition A, except that in step 3 units shall be tested at the applicable high temperature.

Immersion: MIL-STD-202-104, condition B (2 cycles, 30 minutes).

DCL: See table I.

ΔC: Within 5 percent of initial measured value.

ESR: See table I.

Insulation resistance of sleeve: Not less than 100 megohms.

Surge voltage:

DCL: See table I.

ΔC: Within 6 percent of initial measured value.

ESR: See table I.

Moisture resistance: MIL-STD-202-106.

DCL: See table I.

ΔC: Within 6 percent of initial measured value.

ESR: See table I.

Insulation resistance of insulating sleeve: Not less than 100 megohms.

High temperature exposure: (500 hours at +125°C)

DCL: Not more than 200 percent of initial requirement.

ΔC: Within 10 percent of initial measured value.

ESR: Not more than 115 percent of initial requirement.

Reverse voltage: Not applicable.

Penetration of solvents: In accordance with MIL-PRF-39018.

High temperature verification: In accordance with MIL-PRF-39018 at +125°C with derated voltage applied:

DCL: See table I.

ΔC: Within 10 percent of initial measured value.

ESR: Not more than 130 percent of initial requirement.

Marking: In accordance with MIL-PRF-39018.

Part or Identifying Number (PIN): M39018/02- (Dash number from table I).

Substitutability data: See table II.

TABLE II. Substitutability data.

Dash number in MIL-PRF-39018/2A through /2G						Dash number MIL-PRF-39018/2					
Style CU14			Style CU15			Style CU14			Style CU15		
-10 +30	-10 +50	-10 +75	-10 +30	-10 +50	-10 +75	-10 +30	-10 +50	-10 +75	-10 +30	-10 +50	-10 +75
0401	---	0501	0601	---	0701	0001	---	0002	0003	---	0004
0402	---	0502	0602	---	0702	0005	---	0006	0007	---	0008
0403	---	0503	0603	---	0703	0009	---	0010	0011	---	0012
0404	---	0504	0604	---	0704	0013	---	0014	0015	---	0016
0405	---	0505	0605	---	0705	0017	---	0018	0019	---	0020
0406	---	0506	0606	---	0706	0021	---	0022	0023	---	0024
0407	---	0507	0607	---	0707	0025	---	0026	0027	---	0028
0408	---	0508	0608	---	0708	0029	---	0030	0031	---	0032
0409	---	0509	0609	---	0709	0033	---	0034	0035	---	0036
0410	---	0510	0610	---	0710	0037	---	0038	0039	---	0040
0411	---	0511	0611	---	0711	0041	---	0042	0043	---	0044
0412	---	0512	0612	---	0712	0045	---	0046	0047	---	0048
0413	---	0513	0613	---	0713	0049	---	0050	0051	---	0052
0414	---	0514	0614	---	0714	0053	---	0054	0055	---	0056
0415	---	0515	0615	---	0715	0057	---	0058	0059	---	0060
0416	---	0516	0616	---	0716	0061	---	0062	0063	---	0064
0417	---	0517	0617	---	0717	0065	---	0066	0067	---	0068
0418	---	0518	0618	---	0718	0069	---	0070	0071	---	0072
0419	---	0519	0619	---	0719	0073	---	0074	0075	---	0076
0420	---	0520	0620	---	0720	0077	---	0078	0079	---	0080
0421	---	0521	0621	---	0721	0081	---	0082	0083	---	0084
0422	---	0522	0622	---	0722	0085	---	0086	0087	---	0088
0423	---	0523	0623	---	0723	0089	---	0090	0091	---	0092
0424	---	0524	0624	---	0724	0093	---	0094	0095	---	0096
0425	---	0525	0625	---	0725	0097	---	0098	0099	---	0100
0426	---	0526	0626	---	0726	0101	---	0102	0103	---	0104

TABLE II. Substitutability data - Continued.

Dash number in MIL-PRF-39018/2A through /2G						Dash number MIL-PRF-39018/2					
Style CU14			Style CU15			Style CU14			Style CU15		
-10 +30	-10 +50	-10 +75	-10 +30	-10 +50	-10 +75	-10 +30	-10 +50	-10 +75	-10 +30	-10 +50	-10 +75
0427	---	0527	0627	---	0727	0105	---	0106	0107	---	0108
0428	---	0528	0628	---	0728	0109	---	0110	0111	---	0112
0429	0529	---	0629	0729	---	0113	0114	---	0115	0116	---
0430	0530	---	0630	0730	---	0117	0118	---	0119	0120	---
0431	0531	---	0631	0731	---	0121	0122	---	0123	0124	---
0432	0532	---	0632	0732	---	0125	0126	---	0127	0128	---
0433	0533	---	0633	0733	---	0129	0130	---	0131	0132	---
0434	0534	---	0634	0734	---	0133	0134	---	0135	0136	---
0435	0535	---	0635	0735	---	0137	0138	---	0139	0140	---
0436	0536	---	0636	0736	---	0141	0142	---	0143	0144	---
0437	0537	---	0637	0737	---	0145	0146	---	0147	0148	---
0438	0538	---	0638	0738	---	0149	0150	---	0151	0152	---
0439	0539	---	0639	0739	---	---	---	---	---	---	---
0440	0540	---	0640	0740	---	---	---	---	---	---	---
0441	0541	---	0641	0741	---	---	---	---	---	---	---
0442	0542	---	0642	0742	---	0153	0154	---	0155	0156	---
0443	0543	---	0643	0743	---	0157	0158	---	0159	0160	---
0444	0544	---	0644	0744	---	0161	0162	---	0163	0164	---
0445	0545	---	0645	0745	---	0165	0166	---	0167	0168	---
0446	0546	---	0646	0746	---	0169	0170	---	0171	0172	---

Referenced documents: In addition to MIL-PRF-39018, this document references the following:

MIL-STD-202-104
MIL-STD-202-106
MIL-STD-202-107
MIL-STD-202-108
MIL-STD-202-211

Changes from previous issue. The margins of this specification are marked with vertical lines to indicate where changes from the previous issue were made. This was done as a convenience only and the Government assumes no liability whatsoever for any inaccuracies in these notations. Bidders and contractors are cautioned to evaluate the requirements of this document based on the entire content irrespective of the marginal notations and relationship to the last previous issue.

Custodians:
Army - CR
Navy - EC
Air Force – 85
DLA - CC

Preparing activity
DLA - CC

Review activities:
Army – MI
Navy - AS, MC, OS, SH
Air Force - 19

(Project 5910-2021-020)

NOTE: The activities listed above were interested in this document as of the date of this document. Since organizations and responsibilities change, you should verify the currency of the information above using the ASSIST Online database at https://assist.dla.mil/.