INCH-POUND

MIL-PRF-39012/95A
w/AMENDMENT 3
27 June 2021
SUPERSEDING
MIL-PRF-39012/95A
w/AMENDMENT 2
15 July 2016

PERFORMANCE SPECIFICATION SHEET

CONNECTORS, RECEPTACLE, ELECTRICAL, COAXIAL, RADIO FREQUENCY, SERIES SMB (UNCABLED, MALE, PRINTED CIRCUIT, CLASS 2)

This specification is approved for use by all Departments and Agencies of the Department of Defense.

The requirements for acquiring the product described herein shall consist of this specification sheet and MIL-PRF-39012.

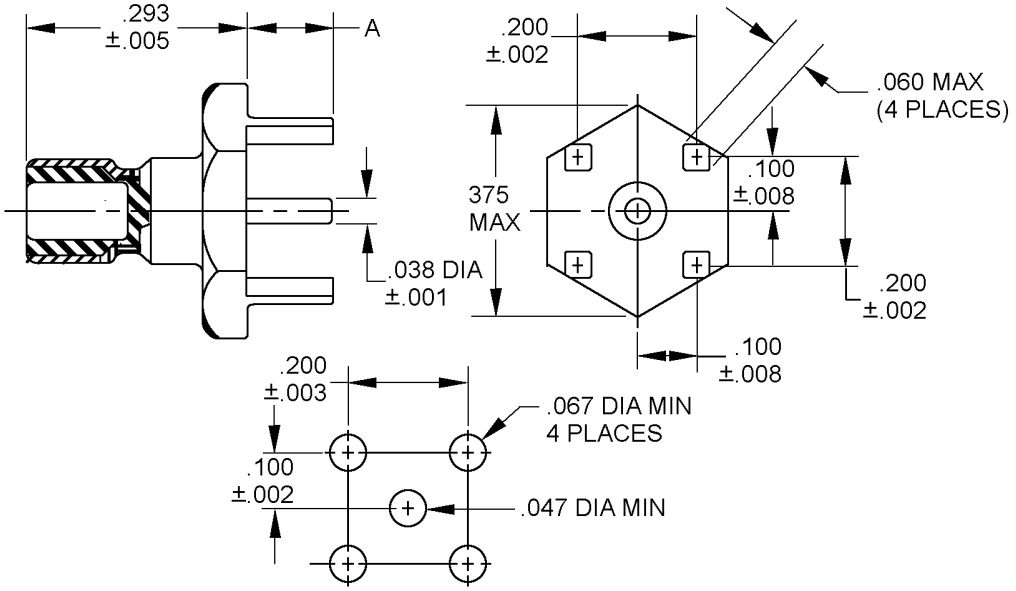

MOUNTING HOLE CONFIGURATION

FIGURE 1. General configuration.

INCHES	MM	INCHES	MM
.001	.02	.060	1.52
.002	.05	.067	1.70
.003	.08	.100	2.54
.005	.13	.200	5.08
.008	.20	.293	7.44
.038	.97	.375	9.52
.047	1.19		

Dash number		Dimension A
0001 (see note 6)	0004	.155 (3.94) ± .010 (.25)
0002 (see note 6)	0005	.125 (3.18) ± .010 (.25)
0003 (see note 6)	0006	.093 (2.38) ± .010 (.25)

NOTES:
1. Dimensions are in inches.
2. Metric equivalents are given for general information only.
3. All undimensioned pictorial representations are for reference purposes only.
4. Configuration optional: dimension .375 (9.52 mm) is the maximum envelope diameter.
5. Not for NAVAIR use.
6. Connector bodies shall be gold plated in accordance with MIL-DTL-45204, type II, grade C, class1.

FIGURE 1. General configuration - Continued.

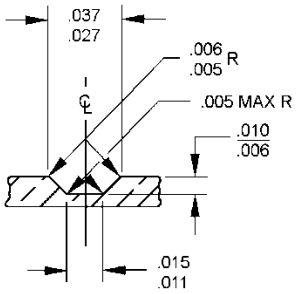

GROOVE DETAIL

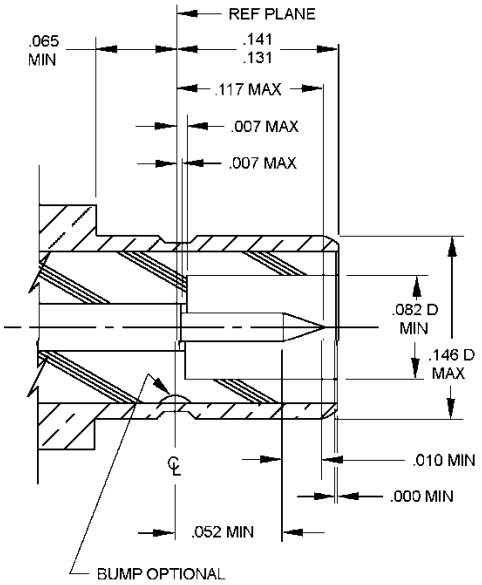

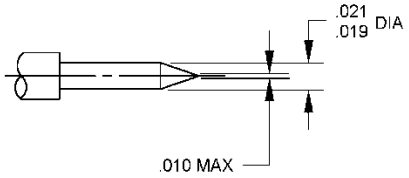

INCHES	MM	INCHES	MM
.002	.05	.027	.69
.005	.13	.037	.94
.006	.15	.052	1.32
.007	.18	.065	1.65
.010	.25	.082	2.08
.011	.28	.117	2.97
.015	.38	.131	3.33
.019	.48	.141	3.58
.021	.53	.146	3.71

NOTES:
1. Dimensions are in inches.
2. Metric equivalents are given for general information only.
3. All undimensioned pictorial representations are for reference purposes only.

FIGURE 2. Mating dimensions for male terminations.

ENGINEERING DATA:

Nominal impedance: 50 ohms.
Frequency range: 0 to 4 GHz.
Voltage rating: 335 V rms maximum at sea level; 85 V rms maximum at 70,000 feet.
Temperature rating: -65°C to +165°C.

REQUIREMENTS:

Dimensions and configuration: See figure 1.
Force to engage and disengage:
Longitudinal force: 14 pounds maximum engage, 2 pounds minimum disengage.
Torque: Not applicable.
Coupling proof torque: Not applicable.
Inspection conditions: Not applicable.
Mating characteristics: See figure 2 for dimensions.
Hermetic seal: Not applicable.
Leakage (pressurized connectors): Not applicable.
Insulation resistance: In accordance with MIL-STD-202-302, test condition B. 1,000 megohms minimum.

Center contact retention:
Minimum axial force: 6.0 pounds from mating end; 4.0 pounds from opposite end.

Torque: 3 inch-ounces.
Solderability: MIL-STD-202-208. For quality conformance inspection, the test shall be performed in group B following the insulation resistance test.
Salt spray (corrosion): In accordance with MIL-STD-202-101, test condition B.
Voltage standing wave ratio (VSWR): Not applicable.
Swept frequency VSWR test setup: Not applicable.

Connector durability:
Insertion and withdrawal force:
500 cycles minimum at 12 cycles per minute maximum.
The mating force shall meet the mating characteristics requirements.

Initial: 14 pounds maximum.
Final: 14 pounds maximum engage and disengage, 2 pounds minimum disengagement.

Contact resistance: In milliohms maximum.

	Initial	After environment
Center contact	6.0	8.0
Outer contact	1.0	1.5
Braid to body	Not applicable	Not applicable

Dielectric withstanding voltage: In accordance with MIL-STD-202-301. 1,000 V rms at sea level.
Vibration, high frequency: In accordance with MIL-STD-202-204, test condition B.
Shock (specified pulse): In accordance with MIL-STD-202-213, test condition M.
Thermal shock: In accordance with MIL-STD-202-107, test condition B.
Moisture resistance: Not applicable.
Corona level: Not applicable.

RF high potential withstanding voltage:
Voltage and frequency: 600 V rms at 5 MHz.
Leakage current: Not applicable.
Cable retention force: Not applicable.
Coupling mechanism retention force: Not applicable.
RF leakage: Not applicable.
Insertion loss: Not applicable.

Group qualification: See table I.

Part number: M39012/95- (dash number from figure 1).

TABLE I. Group qualification.

Group	Submission and qualification of any of the following connectors	Qualifies the following connectors
I	M39012/95-0001 M39012/95-0002 M39012/95-0003	M39012/95-0001, M39012/95-0004 1/ M39012/95-0002, M39012/95-0005 1/ M39012/95-0003, M39012/95-0006 1/

1/ Corrosion (salt spray) and contact resistance data must be submitted to DSCC-VQP before qualification approval may be granted.

NOTE: if a connector manufacturer produces a connector which meets all the requirements for two or more connector types (within the same series), the manufacturer may receive qualification approval for the two or more connector types by qualifying the one connector. It is not necessary that such connectors be in the same group. Each connector, however, must be marked with its own appropriate part number.

Amendment notations. The margins of this specification are marked with vertical lines to indicate modifications generated by this amendment. This was done as a convenience only and the Government assumes no liability whatsoever for any inaccuracies in these notations. Bidders and contractors are cautioned to evaluate the requirements of this document based on the entire content irrespective of the marginal notations.

Referenced documents. In addition to MIL-PRF-39012, this document references the following:

MIL-STD-202-101	MIL-STD-202-208	MIL-STD-202-302
MIL-STD-202-107	MIL-STD-202-213	MIL-DTL-45204
MIL-STD-202-204	MIL-STD-202-301	

CONCLUDING MATERIAL

Custodians:
Army - CR
Navy - EC
Air Force - 85
DLA - CC

Preparing activity:
DLA - CC

(Project 5935-2021-059)

Review activities:
Army - AM, AT, CR4
Navy - AS, MC, OS, SA
Air Force - 19

NOTE: The activities listed above were interested in this document as of the date of this document. Since organizations and responsibilities can change, you should verify the currency of the information above using the ASSIST Online database at https://assist.dla.mil .