INCH-POUND
MIL-PRF-32783/4
4 April 2025

PERFORMANCE SPECIFICATION SHEET

RESISTOR, FIXED, METAL STRIP, CURRENT SENSING, 4-TERMINAL, UNENCAPSULATED, INDUSTRIAL, HIGH RELIABILITY, SPACE LEVEL, STYLE RCKT4026

This specification is approved for use by all Departments and Agencies of the Department of Defense.

The requirements for acquiring the product described herein shall consist of this specification sheet and MIL-PRF-32783.

1. SCOPE

1.1 Scope. This specification covers the requirements for style RCKT4026, fixed, metal strip, 4-terminal, unencapsulated, industrial, high reliability, space level resistors.

1.2 Part or Identifying Number (PIN). Resistors covered by this specification are identified by a PIN which consists of the basic number of this specification and a coded dash number. The PIN is in the following form:

M32783	04BR0010FT
Performance specification number	Coded dash number

The coded dash number must be derived in accordance with MIL-PRF-32783.

2. APPLICABLE DOCUMENTS

2.1 General. The documents listed in this section are specified in sections 3 and 4 of this specification. This section does not include documents cited in other sections of this specification or recommended for additional information or as examples. While every effort has been made to ensure the completeness of this list, document users are cautioned that they must meet all specified requirements of documents in sections 3 and 4 of this specification, whether or not they are listed.

2.2 Government documents.

2.2.1 Specifications, standards, and handbooks. The following specifications, standards, and handbooks form a part of this document to the extent specified herein. Unless otherwise specified, the issues of these documents are those cited in the solicitation or contract.

DEPARTMENT OF DEFENSE SPECIFICATION

MIL-PRF-32783 - Resistor, Fixed, Metal Strip, Current Sensing, Metal Strip, Terminal Temperature Rated, Industrial, High Reliability, Space Level, General Specification for

(Copies of these documents are available online at https://quicksearch.dla.mil/.)

Comments, suggestions, or questions on this document should be addressed to DLA Land and Maritime, ATTN: VAT, Post Office Box 3990, Columbus, OH 43218-3990, or emailed to Resistor@dla.mil. Since contact information can change, you may want to verify the currency of this address information using the ASSIST Online database at https://assist.dla.mil.

AMSC N/A
FSC 5905
DISTRIBUTION STATEMENT A. Approved for public release; distribution is unlimited.

2.3 Order of precedence. Unless otherwise noted herein or in the contract, in the event of a conflict between the text of this document and the references cited herein (except for related associated specifications, specification sheets or MS standards), the text of this document takes precedence. Nothing in this document, however, supersedes applicable laws and regulations unless a specific exemption has been obtained.

3. REQUIREMENTS

3.1 General. The requirements for acquiring the product described herein shall consist of this document and MIL-PRF-32783.

3.2 Interface and physical dimensions. Resistors shall meet the interface and physical dimensions specified on figure 1, as applicable.

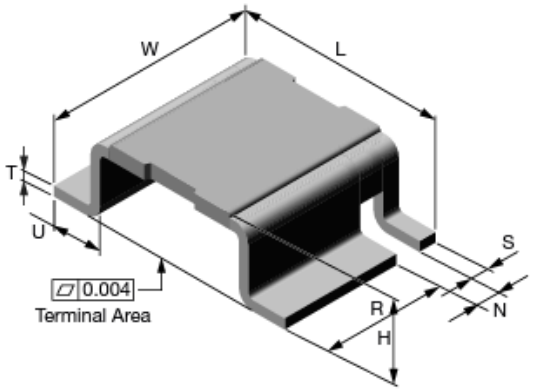

Dimension L Inch	Dimension W Inch	R (REF.)	Dimension S Inch	Dimension T Inch	Dimension U Inch	Dimension N Inch
0.400 ±0.008 (10.1 ±0.2)	0.260 +0.012 -0.008 (6.6 +0.3) -0.2)	0.198 (5.0)	0.028 ±0.004 (0.7 ±0.1)	0.016 ±0.002 (0.4 ±0.05)	0.078 ±0.004 (2.0 ±0.1)	0.039 ±0.006 (0.99 ±0.15)

Dimension H (Inch)				
Resistance value (mΩ)	Height		Resistance value (mΩ)	Height
0.2	0.150 ±0.008 (3.81 ±0.2)		1.3	0.119 ±0.008 (3.02 ±0.2)
0.3	0.137 ±0.012 (3.48 ±0.3)		2	0.114 ±0.008 (2.9 ±0.2)
0.5	0.116 ±0.008 (2.95 ±0.2)		3	0.110 ±0.008 (2.79 ±0.2)
0.7	0.111 ±0.008 (2.82 ±0.2)		4	0.110 ±0.008 (2.79 ±0.2)
1	0.1055 ±0.008 (2.68 ±0.2)		5	0.110 ±0.008 (2.79 ±0.2)

NOTES:
1. Dimensions are in inches.
2. Metric equivalents in parentheses are given for general information only.
3. The pictorial view of the styles above are given as representative of the envelope of the item. Slight deviations from the outline shown, which are contained within the envelope, and do not alter the functional aspects of the device are acceptable.

FIGURE 1. Style RCKT4026.

3.3. Power rating. Full rated power shall be per table I at the terminal temperature = 100°C. Short time overload ratings are based on testing at room ambient conditions only.

TABLE I. Power rating.

Resistance range (mΩ)	Power rating	Short time overload power multiplier
0.2	7	
0.3	6	
0.5	5	
0.7	4	
1	4	
1.3	4	3.5
2	4	
3	3	
4	2	
5	2	

3.4 Resistance temperature coefficient. The resistance temperature coefficient shall be in accordance with table II.

TABLE II. Resistance temperature characteristic.

Characteristic symbol	Resistance temperature characteristic (ppm/°C)	Resistance range (mΩ)
D	±110	0.2 to 0.7
C	±75	1 to 5
A	±25	1 to 5

3.5 Resistance. Discrete values are standard offerings. Any value in between 0.2 mΩ to 5 mΩ may be ordered depending on the manufacturer capability (see figure 1, table I and table II).

3.6 Resistance tolerance. Resistance tolerances are available in (D) ±0.5 percent and (F) ±1 percent.

3.7 Burn-In. The terminal temperature shall be 100°C.

3.8 Short time overload. See table I for power multiplier.

3.9 Life. The terminal temperature shall be 100°C.

3.10 Performance characteristics. The performance characteristics shall be in accordance with table III.

TABLE III. Performance characteristics.

Test or condition	Units	Characteristic A	Characteristic C	Characteristic D
Maximum terminal temperature at full wattage	Temperature °C	100	100	100
Maximum terminal temperature at zero wattage	Temperature °C	170	170	170
Thermal shock	% change in resistance	±0.5%	±0.5%	±0.5%
Burn-In (space level only)		±0.5%	±0.5%	±0.5%
Low temperature operation		±0.5%	±0.5%	±0.5%
Short time overload		±0.5%	±0.5%	±0.5%
High temperature exposure		±1.0%	±1.0%	±1.0%
Moisture resistance		±0.5%	±0.5%	±0.5%
Life		±1.0%	±1.0%	±1.0%
Resistance to soldering heat		±0.5%	±0.5%	±0.5%
Board flex		±0.5%	±0.5%	±0.5%
Resistance temperature characteristic	ppm/°C	±25	±75	±110
Resistance tolerance	± percent	0.5 1.0	0.5 1.0	0.5 1.0

4. VERIFICATION

4.1 Verification. Verification shall be in accordance with MIL-PRF-32783.

5. PACKAGING

5.1 Packaging. For acquisition purposes, the packaging requirements shall be as specified in the contract or order (see 6.2). When packaging of materiel is to be performed by DoD or in-house contractor personnel, these personnel need to contact the responsible packaging activity to ascertain packaging requirements. Packaging requirements are maintained by the Inventory Control Point's packaging activity within the Military Service or Defense Agency, or within the military services system commands. Packaging data retrieval is available from the managing Military Department's or Defense Agency's automated packaging files, CD-ROM products, or by contacting the responsible packaging activity.

6. NOTES

(This section contains information of a general or explanatory nature that may be helpful but is not mandatory.)

6.1 Intended use. Resistors are intended to be used in hybrid circuits where micro-circuitry is indicated and in surface mount applications.

6.2 Acquisition requirements. Acquisition documents should specify the following:

a. Title, number, date of this specification, the applicable associated specification, and the complete PIN (see 1.2).

b. Unless otherwise specified (see 2.1), the versions of the individual documents referenced will be those in effect on the date of release of the solicitation.

c. Packaging requirements (see 5.1).

d. If marking is required (see MIL-PRF-32783).

Custodians:
Army - CR
Navy - EC
Air Force - 85
NASA - NA
DLA – CC

Review activities:
Army - AR, AT, AV, CR4
Navy - AS, CG, MC, OS
Air Force - 19

Preparing activity:
DLA - CC

(Project 5905-2025-031)

NOTE: The activities listed above were interested in this document as of the date of this document. Since organizations and responsibilities can change, you should verify the currency of the information above using the ASSIST Online database at https://assist.dla.mil.