DEFENSE LOGISTICS AGENCY
WEAPONS SUPPORT
P.O. BOX 3990
COLUMBUS, OHIO 43218-3990

November 18, 2025

MEMORANDUM FOR MILITARY/INDUSTRY DISTRIBUTION

SUBJECT: Initial Drafts of: MIL-PRF-31031/33 and /34
Project Numbers: 5935-2026-010 and 5935-2026-011

These initial drafts for these subject documents, are now available for viewing and downloading from the DLA Land and Maritime-VA Web site:

https://landandmaritimeapps.dla.mil/programs/milspec/default.aspx

Major changes to these documents include removing interfaces and referencing MIL-STD-348 for the removed interfaces.

Concurrence or comments are required at this Center within 30 days from the date of this letter. Late comments will be held for the next coordination of the document. Comments from military departments must be identified as either "Essential" or "Suggested". Essential comments must be justified with supporting data. Military review activities should forward comments to their custodians of this office, as applicable, in sufficient time to allow for consolidating the department reply. Lack of response to this draft will be construed as concurrence.

If these documents are of interest to you, please provide your comments or suggested changes. The point of contact for this document is Mr. Candelaria, phone number 614-693-3113, e-mail Eric.Candelaria@dla.mil, or may be mailed via the US Postal Service to DLA LAND AND MARITIME, ATTN: VAI (Attention: Eric Candelaria), P.O. Box 3990, Columbus, OH 43218-3990.

Sincerely,

-/Signed/-
MUHAMMAD AKBAR
Chief,
Interconnection Branch

NOTE: This draft, dated 18 November 2025, prepared by DLA Land and Maritime-VAI has not been approved and is subject to modification. DO NOT USE PRIOR TO APPROVAL. (Project 5935-2026-011)

INCH-POUND

MIL-PRF-31031/34
w/AMENDMENT 2
DRAFT 2025
SUPERSEDING
MIL-PRF-31031/34
w/AMENDMENT 1
16 February 2024

PERFORMANCE SPECIFICATION SHEET

CONNECTOR, ELECTRICAL, COAXIAL, RADIO FREQUENCY, SOCKET CONTACT, SERIES SMP3 TO SMP3, BULLET ADAPTER

This specification is approved for use by all Departments and Agencies of the Department of Defense.

The requirements for acquiring the product described herein shall consist of this specification sheet and MIL-PRF-31031.

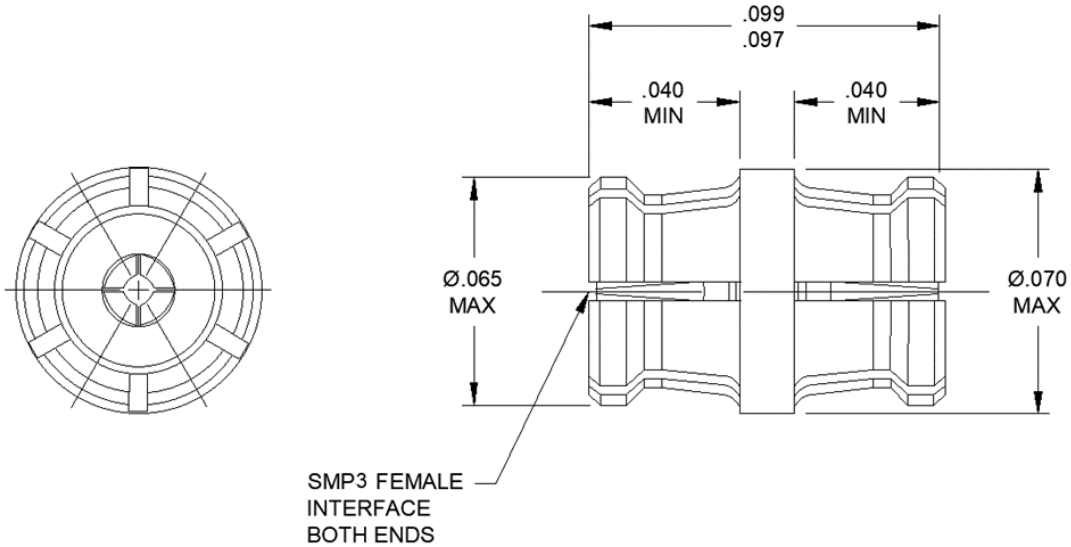

PIN
M31031/34-0001

FIGURE 1. General configuration.

DISTRIBUTION STATEMENT A. Approved for public release; distribution is unlimited.

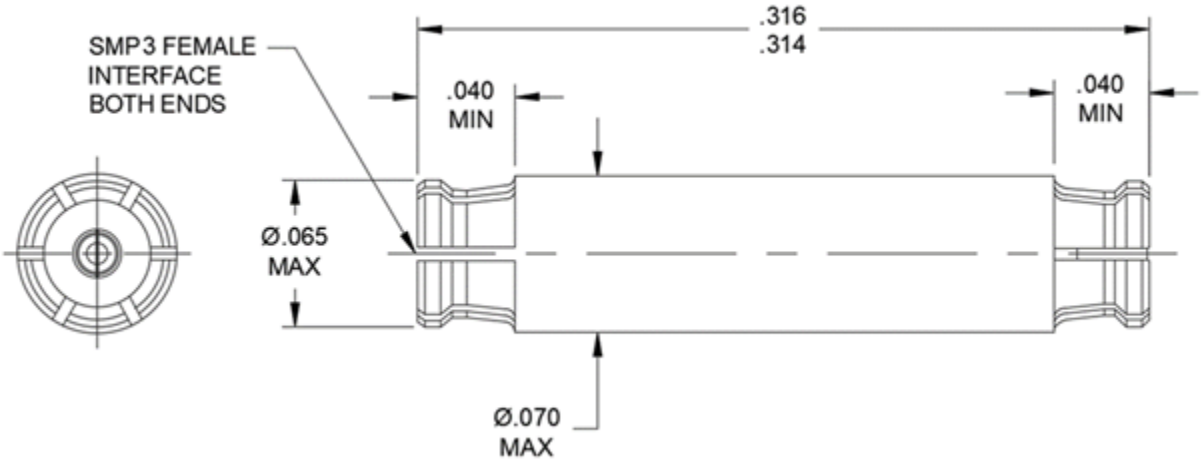

PIN
M31031/34-0002

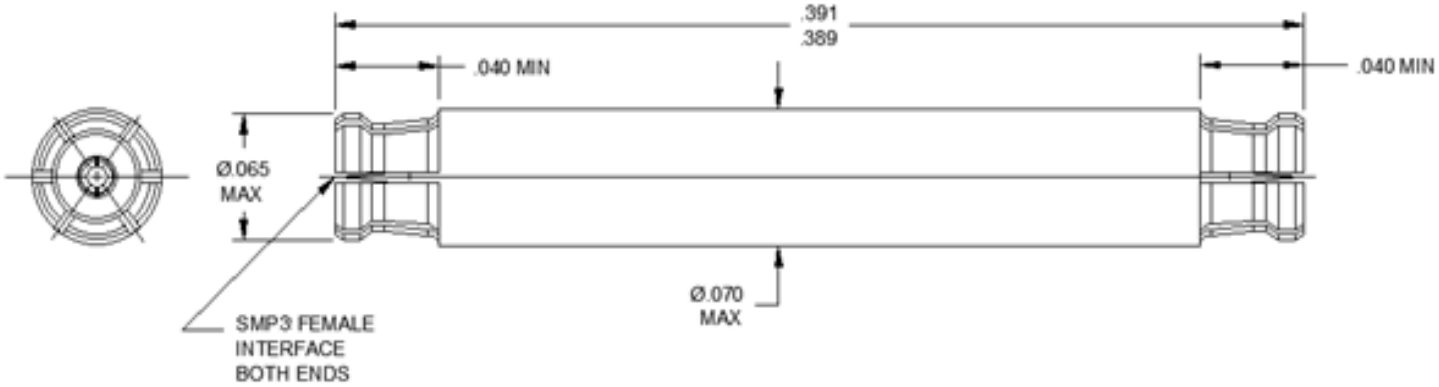

PIN
M31031/34-0003

FIGURE 1. General configuration – Continued.

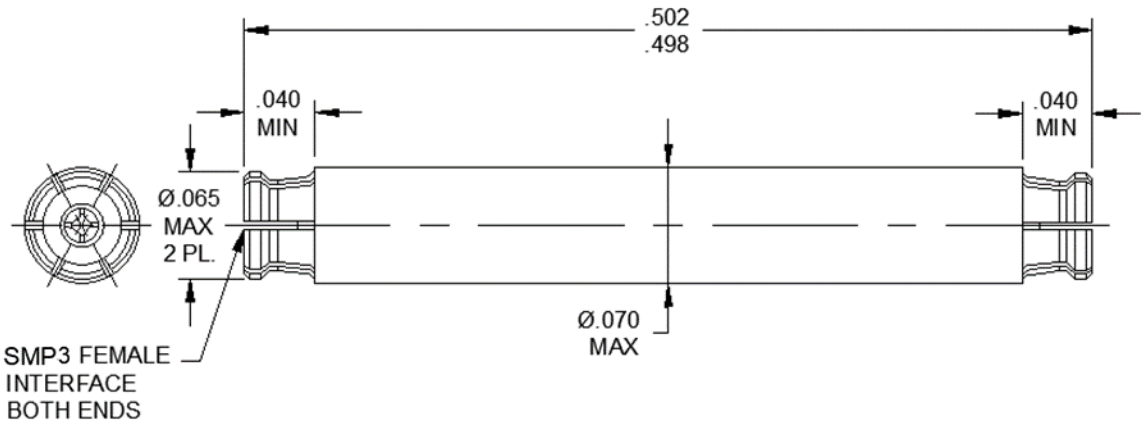

PIN
M31031/34-0004

NOTES:
1. Dimensions are in inches.
2. All undimensioned pictorial configurations are for reference purposes only.
3. Special tools shall be required for assembly. Contact the manufacturer.
4. Interface in accordance with MIL-STD-348, series SMP3, socket contact.

FIGURE 1. General configuration – Continued.

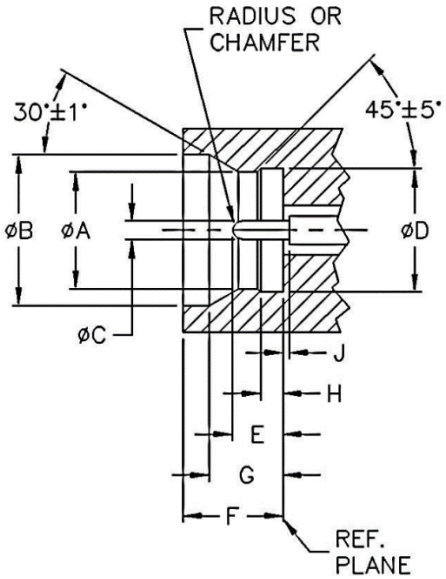

~~FIGURE 2. SMP3 Connector with Pin Contact – Full Detent (for dimensions, see Table 1).~~

~~Table 1 – Dimensions of SMP3 Connector with Pin Contact – Full Detent~~

~~Ref.~~	~~Inches~~	
	~~Min.~~	~~Max.~~
~~A~~	~~.057~~	~~.058~~
~~B~~	~~.073~~	~~.075~~
~~C~~	~~.0085~~	~~.0095~~
~~D~~	~~.059~~	~~.061~~
~~E~~	~~.020~~	~~.030~~
~~F~~	~~.048~~	~~.050~~
~~G~~	~~.033~~	~~.041~~
~~H~~	~~.010~~	~~.012~~
~~J~~	~~.000~~	

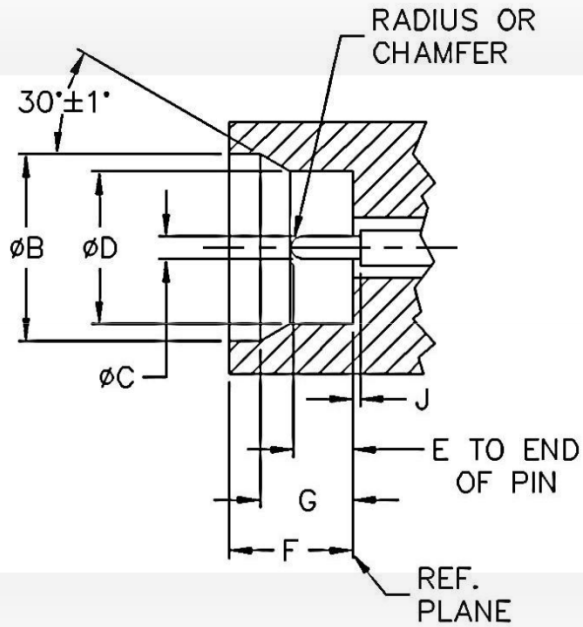

~~FIGURE 3. SMP3 Connector with Pin Contact – Smooth Bore (for dimensions, see Table 2).~~

~~Table 2 – Dimensions of SMP3 Connector with Pin Contact – Smooth Bore~~

~~Ref.~~	~~Inches~~	
	~~Min.~~	~~Max.~~
~~*B*~~	~~.073~~	~~.075~~
~~*C*~~	~~.0085~~	~~.0095~~
~~*D*~~	~~.059~~	~~.061~~
~~*E*~~	~~.020~~	~~.030~~
~~*F*~~	~~.048~~	~~.050~~
~~*G*~~	~~.033~~	~~.041~~
~~*J*~~	~~.000~~	

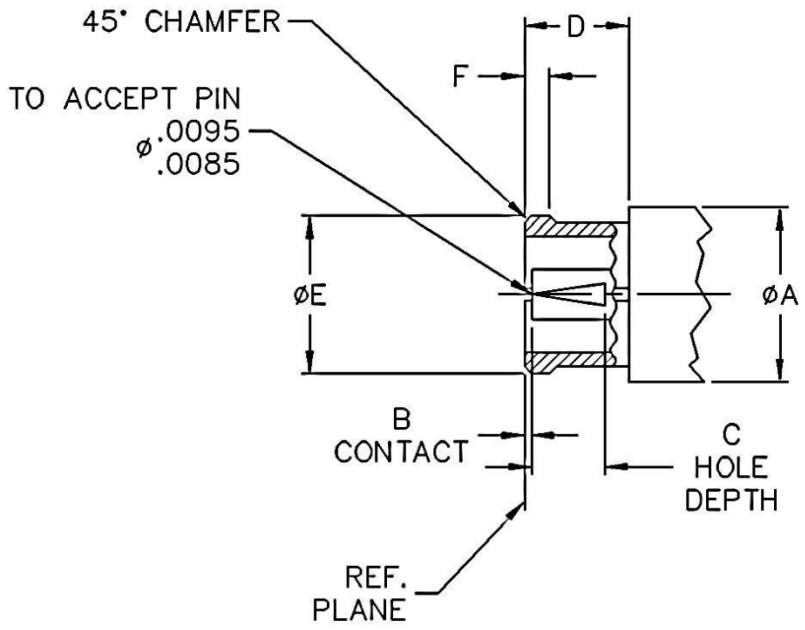

~~FIGURE 3. SMP3 Connector with Socket Contact (for dimensions, see Table 3).~~

~~Table 3 – Dimensions of SMP3 Connector with Socket Contact~~

~~Ref.~~	~~Inches~~	
	~~Min.~~	~~Max.~~
~~A~~		~~.070~~
~~B~~	~~.000~~	~~.005~~
~~C~~	~~.029~~	
~~D~~	~~.040~~	
~~E~~		~~.065~~
~~F~~		~~.0105~~

ENGINEERING DATA

Nominal impedance: 50 ohms

Frequency range: DC to 65 GHz.

RF leakage: -80 dB minimum to 3 GHz.

Voltage rating: 250 V rms maximum at sea level: 65 V rms at 70,000 feet.

Operating temperature: -55°C to +165°C.

REQUIREMENTS (after assembly):

Dimensions and configuration: See figure 1.

Mating interface: In accordance with MIL-STD-348.

Force to engage: 4.0 pounds maximum - full detent
2.0 pounds maximum - smooth bore

Force to disengage:

Full detent: 2.0 pounds minimum.

Smooth bore: 0.3 pounds minimum.

Radial misalignment: 5° maximum.

Axial misalignment: 0.010 maximum.

Center contact inspection conditions (after heat treat)

Oversize test pin:

Test pin diameter: .0098 inch +.0001/-.0000 inch.

Insertion depth: .025 inch minimum.

Number of insertions: 1.

Insertion force test:

Test pin diameter: .0095 inch +.0001/-.0000 inch.

Insertion force: 12 ounces, maximum.

Insertion depth: .025 inch minimum.

Withdrawal force test:

Test pin diameter: .0085 inch +0000/-.0001 inch.
Withdrawal force: 0.125 ounce, minimum.

Insertion depth: .025 inch minimum.

Coupling proof torque: Not applicable.

Hermetic seal: Not applicable.

Leakage (pressurized connectors): Not applicable.

Center contact retention: 0.75 pounds minimum axial force.

Radial torque: Not applicable.

Voltage standing wave ratio:

DC to 12 gigahertz: 1.25:1 maximum.
12 to 26.5 gigahertz: 1.35:1 maximum.
26.5 to 40 gigahertz: 1.40:1 maximum.
40 to 65 gigahertz: 1.55:1 maximum.

VSWR procedure.

The VSWR shall be measured in accordance with the following procedure or a method acceptable to the Government.

Part should be tested using a Network Analyzer with the Time Domain (TDR) option installed. This is essential to allow the effect of the adapters to be “gated” out. The recommended network analyzer systems include suitable equipment with NIST traceability or equivalent. All gating will be completed in accordance with the procedures stated by the network analyzer manufacturer with the following settings:

1. The low-pass mode will have a higher resolution than the band-pass mode.
2. Each gate shape specified will not be smaller than the minimum span to ensure the response has the correct start and stop times.
3. “Port Extension” is also used for detection to move the measurement plane after calibration is complete.
4. Gate shape to be minimal to have a minimal Rise gate time.

The printer/plotter and the computer should be any unit compatible to the system. The test adapters will utilize the following frequency bands:

Frequency	VSWR
500 MHz	1.055
1 GHz	1.055
5 GHz	1.075
10 GHz	1.100
15 GHz	1.125
18 GHz	1.140
26 GHz	1.180
40 GHz	1.25
50 GHz	1.30
65 GHz	1.375

Calibration of the system should be performed using the manufacturer’s calibration kits and the recommended calibration procedures. The frequency range shall be DC to 65 GHz. The VSWR calibration test setup shall be verified using the manufacturers verification kits. The calibrated system VSWR shall be less than 1.02 + .001F (F in GHZ).

The VSWR of the DUT shall be measured using the procedures described in the manufacturer’s operating instructions. The time domain shall then be used to remove the effects of the test adapter.

The output shall be generated using the appropriate printer/plotter.

Moisture resistance: MIL-STD-202-106, except step 7b shall be omitted. Resistance shall be 700 megohms within 5 minutes after removal from humidity.

Contact resistance (in milliohms, maximum):

	Initial
Center contact	6.0
Outer contact	2.0
Outer conductor to connector body	0.5

Dielectric withstanding voltage at sea level: 250 V rms minimum, 65 V rms at 70,000 feet.

Vibration, high frequency: MIL-STD-202-204, test condition D.

Corona level:

Altitude: 70,000 feet.
100 V rms, minimum.

Insulation resistance: 3,500 megohms minimum when tested in accordance with MIL-PRF-31031.

Altitude: Sea level to 70,000 feet.

Solderability: Not applicable.

Shock (specified pulse): MIL-STD-202-213, test condition I.

Thermal shock: MIL-STD-202-107, test condition B (except high temperature to be +165°C).

RF high potential withstanding voltage:

150 V rms minimum at sea level.

Frequency: 5 MHz.
Leakage current: Not applicable.

Cable retention: Not applicable.

Coupling mechanism retention force: Not applicable.

Durability: 100 cycles, full detent.
500 cycles, smooth bore.

RF insertion loss: $.12\sqrt{F(GH_z)}$ dB

Part or Identifying Number (PIN): M31031/34 (See figure 1).

Materials:

Contacts and adapter housing: Beryllium copper in accordance with ASTM B196/B196M, gold plated to a minimum thickness of 50 microinches (1.27 μm) in accordance with MIL-DTL-45204, type II, grade C, class 1, over 50 microinches (1.27 μm) minimum of nickel in accordance with SAE QQ-N-290.

Amendment notations. The margins of this specification are marked with vertical lines to indicate modifications generated by this amendment. This was done as a convenience only and the Government assumes no liability whatsoever for any inaccuracies in these notations. Bidders and contractors are cautioned to evaluate the requirements of this document based on the entire content irrespective of the marginal notations.

Referenced documents. In addition to MIL-PRF-31031, this document references the following:

ASTM B196/B196M	MIL-STD-202-213
MIL-DTL-45204	MIL-STD-348
MIL-STD-202-106	SAE QQ-N-290
MIL-STD-202-107	
MIL-STD-202-204	

CONCLUDING MATERIAL

Custodians:
Army - CR
Navy - EC
Air Force - 85
NASA - NA
DLA - CC

Preparing activity:
DLA - CC

(Project 5935-2026-011)

Review activities:
Amy - AT, AV, EA, MI
Navy - AS, MC, OS, SH
Air Force - 19

NOTE: The activities listed above were interested in this document as of the date of this document. Since organizations and responsibilities can change, you should verify the currency of the information above using the ASSIST Online database at https://assist.dla.mil.