PERFORMANCE SPECIFICATION SHEET

TERMINI, FIBER OPTIC, LENS, NON-KEYED, CONNECTOR, REMOVABLE, ENVIRONMENT RESISTING, SOCKET TERMINUS, SIZE 16, REAR INSERT/REAR RELEASE, 1.58 MM CERAMIC FERRULE, (FOR MIL-STD-1760 CONNECTORS)

This specification is approved for use by all Departments
and Agencies of the Department of Defense.

The requirements for acquiring the product described herein
shall consist of this specification and MIL-PRF-29504.

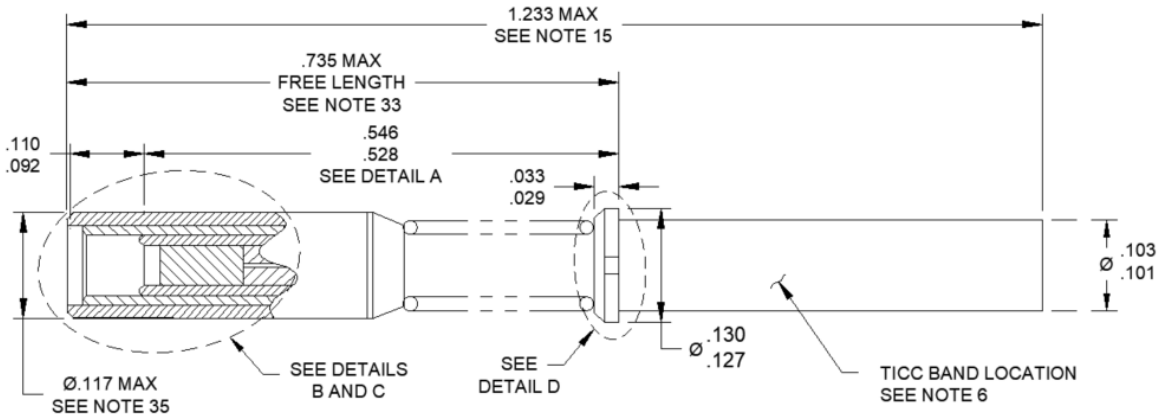

FIG. 1 SOCKET TERMINUS LENS

FIGURE 1. Socket terminus, lens.

Inches	mm	Inches	mm	Inches	mm	Inches	mm	Inches	mm
.0006	.015	.029	.74	.092	2.34	.127	3.23	.735	18.7
.002	.05	.033	.84	.101	2.57	.130	3.30	.782	19.9
.003	.08	.041	1.04	.103	2.62	.158	4.01	1.0000	25.40
.006	.15	.046	1.17	.110	2.79	.528	13.4	1.233	31.3
.026	.66	.072	1.83	.117	2.97	.546	13.7		

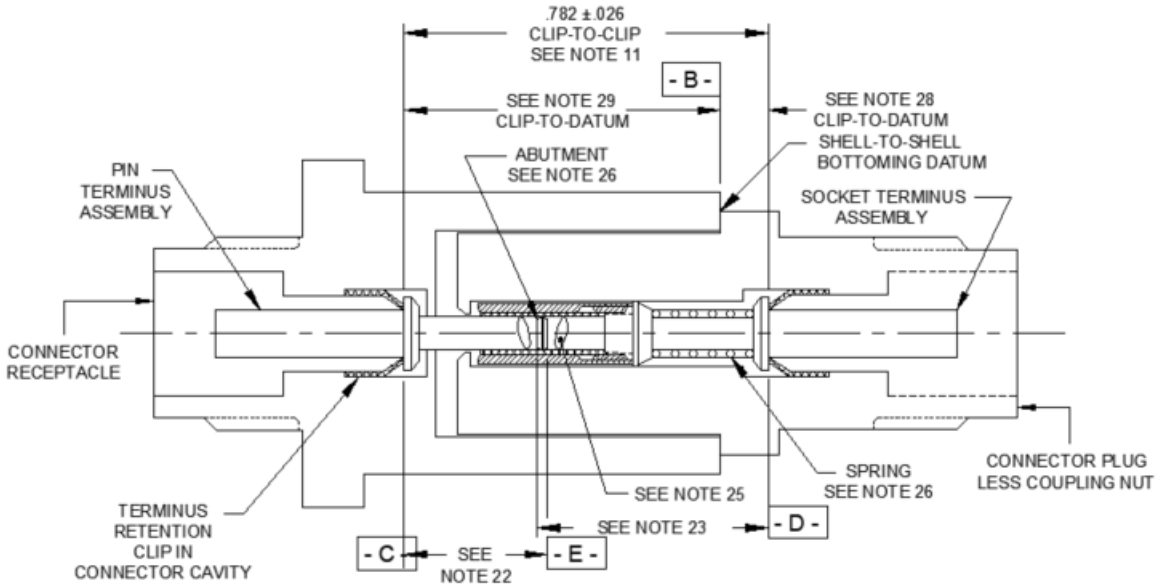

DETAIL A

TERMINI FERRULE ABUTMENT
AND TERMINUS CAVITY RETENTION
INCLUDING CLIP-TO-CLIP DIMENSIONS
SEE NOTE 31

FIGURE 1. Socket terminus, lens - Continued.

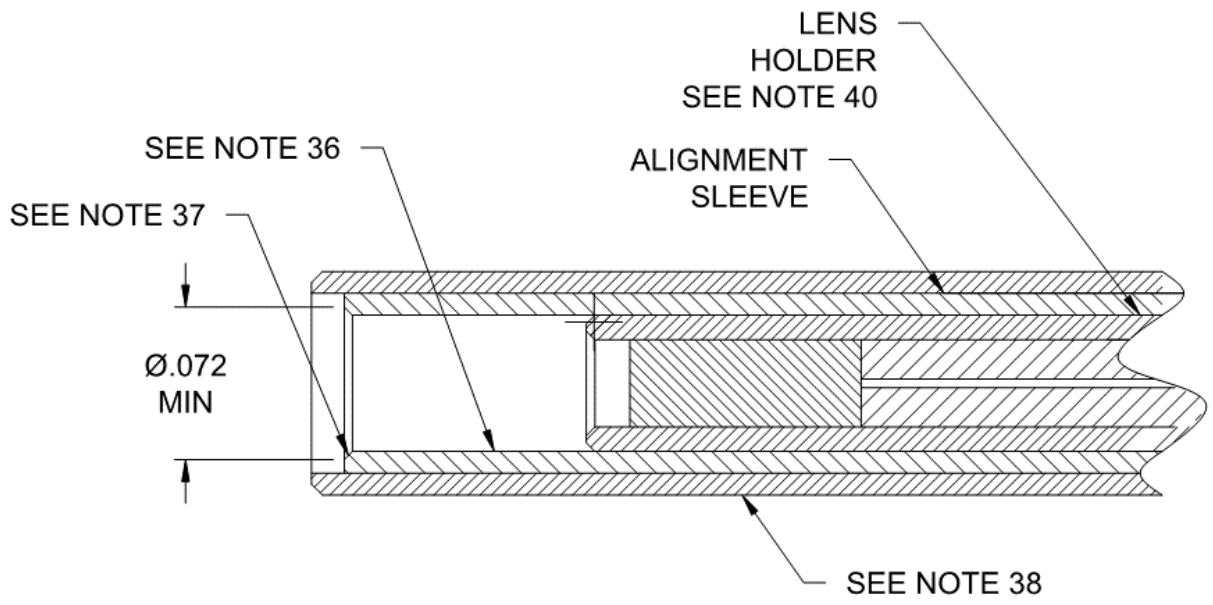

DETAIL B

TERMINUS FRONT END INSIDE ALIGNMENT SLEEVE

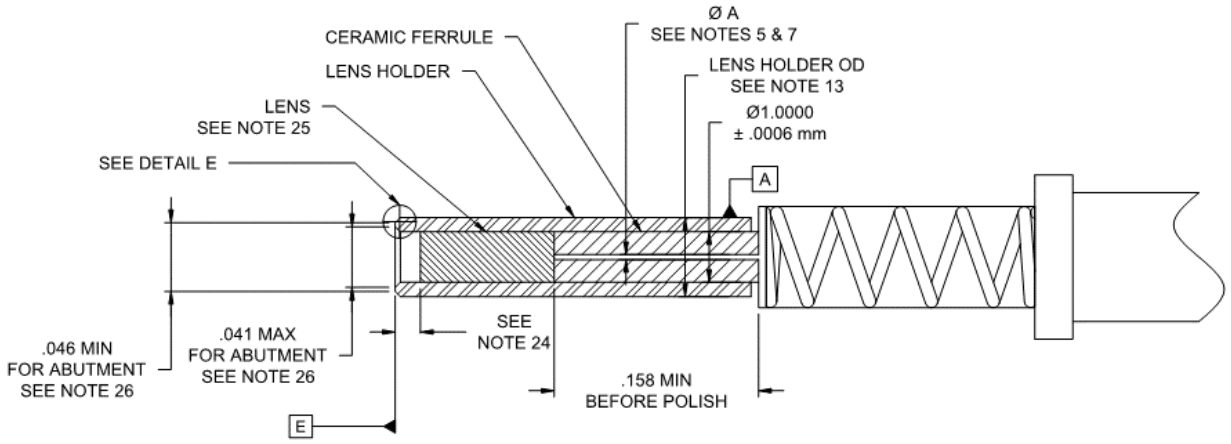

DETAIL C

TERMINUS FRONT END INCLUDING LENS HOLDER

FIGURE 1. Socket terminus, lens - Continued.

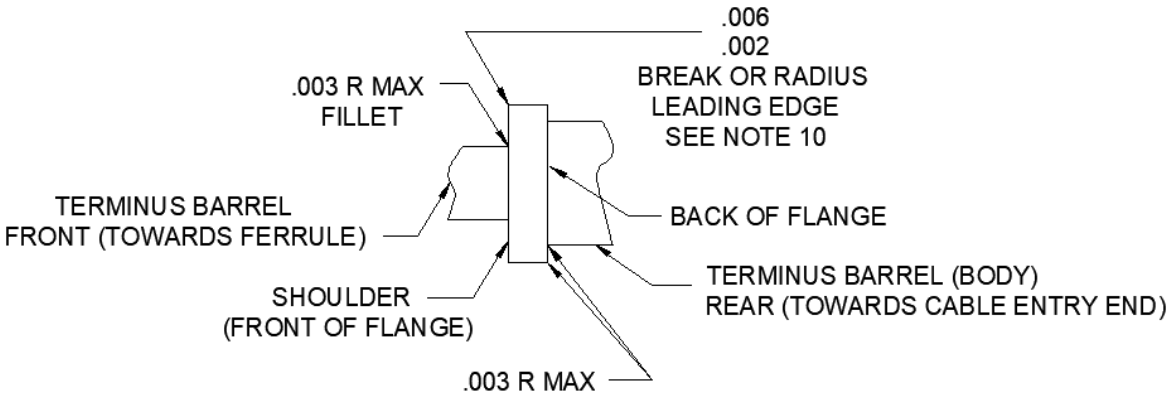

DETAIL D

SHOULDER (FLANGE)

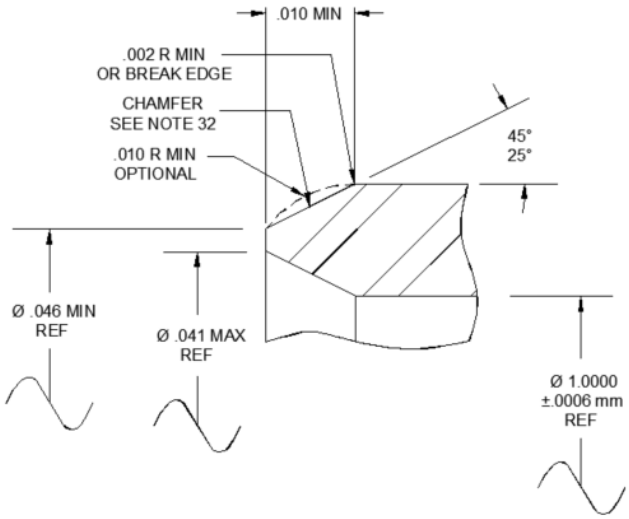

DETAIL E
CHAMFER SURFACE

NOTES:

1. Dimensions are in inches except for diameter ”A” (see table II), circular run out, lens holder surface roughness (see note 19), and ferrule outside diameter which are dimensioned in metric units only.
2. Metric equivalents are given for general information only.
3. All diameters are to be concentric within .002 inch (0.05 mm), except as noted.
4. Dimensions apply to plated/finished part.
5. Hole circular runout in table II relative to datum A.
6. The TICC marking shall be at the front end of the terminus barrel. The TICC marking may be represented directly as an alpha-numeric or by the associated color bands. An alternative location of the marking shall be allowed only in the case of insufficient surface area and only if approved by the qualifying activity. (Also see notes 8 and 9)
7. Hole "A" diameter and tolerance are specified in table II.

FIGURE 1. Socket terminus, lens - Continued.

8. Manufacturer's symbol or trademark location is in front of the first TICC band (see figure 1 of MIL-PRF-29504). An alternate location of the marking shall be allowed only in the case of insufficient surface area and only if approved by the qualifying activity. The manufacturer shall list the symbol or trademark in accordance with SAE AIR 1351.
9. The dimension shown is effective prior to the application of the TICC marking.
10. Optional dimension: Maximum allowable edge break is .015 inch (0.38 mm).
11. Termini qualified to this specification sheet shall meet the performance requirements when inserted into a connector with clip-to-clip dimensions specified in Detail A.
12. Terminus design shall accommodate a single fiber cable with a maximum diameter of .087 inch (2.2 mm).
13. Lens holder diameter .06246 to .06250 inches (1.5865 to 1.5875 mm).
14. For interoperability, the length of exposed ferrule to the terminus shoulder (end face to the front of the shoulder) shall be compatible to the 0.262 inch (6.62 mm) minimum dimension specified for the counterpart MIL-PRF-29504/24 lens pin terminus.
15. Maximum length. Terminus length shall be sufficient to prevent damage of the connector rear grommet seal when inserting the terminus removal tool. The lobes of the rear grommet seal can be pinched between the tip of the removal tool and the terminus barrel cable entrance. This pinching may result in tears and ripping of the lobes that compromises the connector grommet sealing.
16. The individual bag or container shall have the MIL-PRF-29504 Part Identifying Number (PIN) marking on container or on a tag inside the container.
17. All terminus metal parts are to be corrosion resistant.
18. Barrel is the metallic portion of the terminus that accepts the ferrule at one end and the fiber optic cable (barrel crimp area) at the other end. The barrel can be comprised of multiple pieces.
19. Lens holder outside diameter shall have a surface roughness of 0.2 micrometers maximum.
20. One of the standardized strip dimensions of this terminus is based on a buffer insertion of the optical fiber to the back of the ferrule. Also, the intent is to allow insertion of a 20 gauge dispensing tip (syringe needle) to make contact with the ferrule (no neck down or dead zone/expansion zone at ferrule interface) and to have fiber supported with buffer up to entry into the ferrule. Compliance is conformance to the standardized strip length (see "Design and construction: Dimensions and configuration" in this specification sheet - the termination procedures cited contain the reference for the standardized cable strip lengths).
21. Detail A shows the interface of components and features along with a clip-to-clip dimension and dimensioning for abutment of the lens pin terminus and lens socket terminus ferrules. Since the air gap is not part of the pin or socket termini, detail B shows the location and distance of the beginning of the lens to the front end face of the ferrule. From this dimension and the counterpart dimension for the lens pin terminus, the air gap in relation to the lens pin terminus, lens socket terminus, connector plug and connector receptacle can be determined.
22. Lens pin terminus (per MIL-PRF-29504/24) linear dimension is from the back of the flange to the ferrule tip (see figure 1 of per MIL-PRF-29504/24).
23. Lens socket terminus (herein) linear dimension is from the back of the flange to the ferrule tip shall conform to that dimensioned on the socket terminus in figure 1.
24. The distance between the front of the lens and the front end of the lens holder is half the distance of the lens separation distance (see table III).
25. Lens for the terminus (typical for each terminus). General depiction of a lens is shown rather than intent to use that particular lens configuration.
26. Standardized method used to compress lens socket terminus spring against a metal abutment, provide alignment and control the air gap is to have ferrule-to-ferrule abutment.
27. Back of flange of the flange on the terminus barrel is the lead surface for the retention clip fingers.
28. Dimension for interoperability of .087 REF relating the front surface of the connector receptacle (or shoulder feature on the connector plug) to the back of the flange on the terminus barrel.
29. Dimension for interoperability of .695 REF relating the front surface of the connector receptacle (or shoulder feature on the connector plug) to the back of the flange on the terminus barrel.
30. Explanation for datum B to E. Datum -B- (the shell-to-shell bottoming datum) is common to both connector shell halves (receptacle and plug). The .695 inch dimension locates the clip to the receptacle and the .087 inch dimension locates the clip to the plug. Datum -C- is the pin termini shoulder interface to the clip. Datum -D- is the socket termini shoulder interface to the clip. Datum -E- is at the tip of the pin terminus ferrule.
31. Detail A is meant to provide a simplistic representation of the terminus interface within a connector. Critical features in detail A include the clip-to-datum dimension (where connector shells bottom) and the clip-to-clip dimension. The socket terminus is shown as an installed, but not mated condition. In a not mated condition, there is an overlap between ferrules for the pin terminus and the socket terminus.

FIGURE 1. Socket terminus, lens - Continued.

32. Ferrule surface shown to have either a chamfer within 25° to 45° angle X .010 minimum, or a .010 R minimum or a combination of both.
33. Free length prior to installation in the connector.
34. If using epoxy to bond ferrule, no epoxy meniscus is permitted at ferrule-to-barrel interface.
35. Alignment sleeve and body design optional, not to exceed maximum envelope dimensions.
36. For alignment sleeve design, engagement force shall be less than preload force of the spring. For solid alignment sleeve design, the inside diameter (I.D.) shall be .06251 to .06270 inch (1.588 to 1.593 mm). For split alignment sleeve design, the (I.D.) tolerance does not apply.
37. Alignment sleeve surface shown to be either .003 R minimum or chamfer within 25° to 65° angle X .003 minimum.
38. Alignment sleeve shall be ceramic. Alignment sleeve cover shall be provided for the ceramic alignment sleeve.
39. Installation. For smaller OD (outside diameter) cable jackets (less than 1.7 mm), the OD of the cable is to be built up using tubing or larger diameter cable jacket (not packaged with the termini). This also provides additional strain relief. The end of the tube should be located inside the terminus and sufficiently long to extend beyond the rear grommet seal. When the terminus is used for a buffered fiber application, tubing or cable outer jacket used as tubing shall be used to build up the buffered fiber OD. This building up of the OD is necessary to ensure sufficient environmental sealing of the connector rear grommet seal.
40. Design and installation to affix the lens holder to the ferrule. Means to affix the lens holder to the ferrule shall be mechanical (such as snap on groove, bayonet, screw-on, press-fit) or bonded (such as internally with epoxy or UV adhesive, externally with epoxy).

FIGURE 1. Socket terminus, lens - Continued.

REQUIREMENTS:

Temperature ranges: Temperature range designations shall be in accordance with table I.

TABLE I. Temperature range designation.

Temperature range designation	Operating temperature		Non-operating temperature		Storage temperature	
	ºF	ºC	ºF	ºC	ºF	ºC
1	Not Applicable	Not Applicable	Not Applicable	Not Applicable	Not Applicable	Not Applicable
2	-67 to +329	-55 to +165	-40 to +185	-40 to +85	-40 to +185	-40 to +85

Design and construction:

Dimensions and configuration: See figure 1 and table II. Termini shall meet the requirements of this specification when terminated using the procedures specified in Requirement 4101 of MIL-STD-1678-4 up to the processes for ferrule polishing and affixing the lens holder to the ferrule.

TABLE II. TICC numbers and dimensions for lens socket termini.

Fiber Type 1/	Fiber size (um)	Ferrule hole diameter (um) 2/, 3/	Wavelength nominal (nm) 4/, 5/	Wavelength range (nm) 4/, 5/	TICC PC polished 6/
SM	9/125	125.3	1310	1270-1355	4329
	9/125	125.3	1550	1530-1570	4330
	9/125	125.3	S Band	1460-1530	4331
	9/125	125.3	L Band	1565-1625	4332
	9/125	125.5	1310	1270-1355	4333
	9/125	125.5	1550	1530-1570	4334
MM	50/125	126.0	850	750-950	4335
	62.5/125	126.0	850	750-950	
	50/125	126.0	1300	1270-1355	4336
	62.5/125	126.0	1300	1270-1355	
	50/125/155	156.0	850	750-950	4337
	62.5/125/155	156.0	850	750-950	

1/ Return loss shall be ≥ 34 dB for SM (single mode).
2/ Tolerance on the ferrule hole diameter shall be +1/-0 um (microns or micrometers).
3/ Circular run-out on SM ferrule hole diameters shall be ≤ 0.5 um. Circular run-out on MM ferrule hole diameters shall be ≤ 1.0 um.
4/ Wavelength coating on the lens to cover the wavelength range for DWM applications.
5/ Recommend that current wavelength coverage (limits) of the lens coatings be extended by +/- 10 nm for potential future expansion of current wavelength ranges.
6/ Unless otherwise specified, TICC shall be marked on the terminus as numerals (digits) and not color bands.

Size. For ferrule inside diameter and ferrule outside diameter inspection, ferrule manufacturer certification of compliance may be used in lieu of in-house inspection by the manufacturer at the terminus production facility.

Weight: 0.0022 lb (1.0 gram) maximum.

Mating termini: Pin termini in accordance with MIL-PRF-29504/24.

Circular runout: The circular runout of the ferrule bore to the ferrule outer diameter shall be not greater than the value specified for applicable hole size in table II. For ferrule circular run-out (concentricity) inspection, ferrule manufacturer certification of compliance may be used in lieu of in-house inspection by the manufacturer at the terminus production facility.

Cable strain relief capture mechanism. Terminus barrel shall include a capture mechanism specified for this terminus design (see figure 1) to captivate strength member. Cable strain relief capture mechanism shall not interfere with intended sealing performance of wire grommet seal, a component in the MIL-STD-1760 connector, or with the functionality of the insertion and removal tools (see tools, table X).

Style 1: Not applicable for this specification sheet.

Style 2: Captive strength member inside terminus barrel (body).

Style 3: Captive strength member outside terminus barrel (body) with crimp sleeve. Not applicable for this specification sheet.

Crimp sleeve: Not applicable for this specification sheet.

Frequency of terminus end face cleaning. Unless otherwise specified, terminus may be cleaned before or after each test if the connector is de-mated. Cleaning shall not be performed during the ten successive mates for the insertion loss test. Unless otherwise specified, cleaning may be performed during mating durability before each optical transmittance measurement. Terminus end face cleaning shall be performed for the post optical transmittance measurement after the salt spray test. The optical transmittance measurement is performed after the general cleaning and inspection for corrosion. No degradation in performance shall occur as a result of cleaning.

Optical Interface Specifications

Key optical characteristics for the interface are defined in table III for lens termini compatible with the specified GRIN lens requirements. Requirements specified in table III are pertinent for measuring a fiber-lens assembly. All beam measurements are specified at the lens face opposite the optical fiber.

TABLE III. Optical interface parameters – lens termini compatible with GRIN lenses.

Parameter	Requirements 3/			
Wavelength (nm)	850	1300	1310	1550
Lens diameter (Nominal)	1.0 mm	1.0 mm	1.0 mm	1.0 mm
Lens separation distance +/- 0.5 mm	1.0 mm	1.0 mm	1.0 mm	1.0 mm
Clear aperture	0.7 mm	0.7 mm	0.7 mm	0.7 mm
Beam Waist (Diameter) – SM (Nominal)	NA	NA	190 microns	190 microns
Beam Waist Location (Nominal +/- 100 microns) 4/	NA	NA	Lens Vertex	Lens Vertex
Rayleigh range SM (minimum)	NA	NA	21 mm	21 mm
Beam Diameter MM (62.5/125) Max 1/	625 microns	625 microns	NA	NA
Lens Pitch (Nominal) 2/	.25	.25	.25	.25
Index Gradient Constant , (A)^.5 +/-.002 2/	0.601	0.597	0.597	0.596
Working distance (Nominal) 5/	1.0 mm	1.0 mm	1.0 mm	1.0 mm

1/ Beam waist at front surface of lens.
2/ GRIN only.
3/ NA = Not Applicable.
4/ Varies by technology or design (generally at or near the lens front surface vertex).
5/ See definition for working distance at the end of this specification sheet.

Specifications for termination.

1. Lens termini shall be constructed to meet the requirements for temperature range 2 and be provided unterminated.
2. Termination shall be performed per Requirement 4101 of MIL-STD-1678-4 except for strip length, polishing, and the noted exceptions for lens termini.

Material:

Ferrule: Ferrule materials shall be zirconia ceramic.

Lens holder: Lens holder material shall be zirconia ceramic or made of metal.

Adhesives: Use adhesive specified in either Requirement 4101 of MIL-STD-1678-4.

Sealing compounds: Sealing compounds which may flow at the maximum specified operating temperature or exhibit cracking at the minimum specified operating temperature shall not be used.

Qualification:

Qualification shall consist of performing testing specified for inspections for un-terminated termini, inspections for the terminus as part of a single fiber cable, and inspections of termini in a multiple termini connector as listed in table IV.

TABLE IV. Qualification inspections (except interoperability).

Temperature range: test performed 1/, 2/	Temperature range 2	
	SM	MM 3/
Tests for un-terminated termini		
Group 1 4/		
Size 5/	X	X
Weight 5/	X	
Identification markings 5/	X	
Workmanship 5/	X	
Circular runout 5/	X	X
Beam interface parameters 18/	X	X
Group 2 5/, 6/, 7/		
Terminus insertion & removal forces	X	
Terminus retention 5/	X	
Maintenance aging	X	
Lens scratches and defects	X	X
Lens abrasion resistance	X	X
Group 3 (polymeric materials)		
Ozone	X	
Fungus resistance		
Group 4		
Modified SO_2/salt spray		
Tests for termini as part of a single fiber cable		
Group 1 14/, 19/		
Attenuation rate	X	
Polarization dependent loss	X	
Encircled flux		X
Bandwidth		X
Group 2 (16 termini mated pair – each pullout test)		
Fiber pull out force 8/		
Cable pull out force 8/	X	
Twist 17/	X	
Group 3 (16 termini mated pair from cable pull out force)		
Salt spray	X	
Fluid immersion	X	
Terminus cleaning	X	
Radiation 15/	X	X

See footnotes at end of table.

TABLE IV. Qualification inspections (except interoperability) - Continued.

Temperature range: test performed 1/, 2/	Temperature range 2	
	SM	MM 3/
Tests for termini as an integral part of a multiple termini connector		
Group 1 (4 connector mated pair, 16/)		
Interoperability 9/	X	X
Optical tests		
Insertion loss	X	X
Return loss	X	
Bit error rate	X	X
Group 2 (2 connector mated pair, 16/)		
Mating durability	X	
Terminus cleaning	X	
Return loss 10/	X	
Group 3 16/		
Mechanical tests 11/		
Vibration 12/	X	X
Shock, MIL-DTL-901 12/	X	X
Environmental (2 connector mated pair) 11/		
Thermal shock	X	X
Temperature humidity cycling	X	
Temperature cycling	X	
Altitude immersion	X	
Temperature life	X	
Flammability 11/	X	
Insertion loss verification 13/	X	X
Return loss 13/	X	

Notes:

1/ Qualification consist of performing tests in this table for temperature range 2 (TR2).

2/ "X" indicates test applies when performing a terminus qualification.

3/ Termini tested shall be terminated on fiber optic cable with a 50/125 micron fiber size. No additional test samples terminated on fiber optic cable with the 100/140 micron fiber size are required.

4/ Sample size. Sample size, test sample configuration and test sample fabrication (with the process tailored for lens attachment) shall conform to MIL-STD-1678-4 Requirement 4101.

a. Unterminated termini. One test sample is a terminus that has not been terminated (fabricated) onto the end of a fiber optic cable or optical fiber.

b. Termini as part of a single fiber cable. One termini mated pair = one pin terminus and one socket terminus.

c. Termini as part of a multiple termini connector. One connector mated pair = A multiple fiber cable assembly with a mated MIL-PRF-64266 connector plug and connector receptacle fully populated with MIL-PRF-29504 lens termini.

TABLE IV. Qualification inspections (except interoperability) - Continued.

5/ These inspections are to be performed by the manufacturer at the production facility. Exception may be taken for weight, circular run out, terminus retention, terminus insertion and removal forces and maintenance aging.
6/ Test fixture for this test is to include fiber optic; MIL-STD-1760 connectors for retaining the termini during testing.
7/ Test performed using an unmated receptacle connector.
8/ Each terminus is to be terminated on one end of a single fiber cable. Cable used is to have provisions compatible with termini strain relief, as applicable. Termini, selected from the group that underwent inspections for un-terminated termini, shall be used. A minimum sample size of 16 socket termini and 16 of the applicable counterpart pin termini (i.e., 32 pin termini for this configuration), selected from the group that underwent inspections for un-terminated termini, shall be used for each of these tests.
Fiber pullout. When applicable, separate test samples of the termini must be prepared on single fiber cable without any strain relief. The change in optical transmittance shall be met after the test.
Cable pullout. Separate test samples of the termini must be prepared on single fiber cable with strain relief. The change in optical transmittance shall be met after the test.
9/ Interoperability. This testing is done by DLA Land and Maritime-VTP which maintains/retains the interoperability standards. Please note that separate test samples are required for interoperability testing. These test samples will then be retained by DLA Land and Maritime as interoperability standards. Interoperability needs to be performed for one temperature range, not both when the constraints specified under note 3/ are met.
10/ Return loss after the mating durability. The relaxation given for PC polished termini to re-polish and redo the test is not allowed for the lens termini.
11/ Mechanical tests. Option of using new test samples from Group 2 for Group 3 Mechanical test. Otherwise, continue with those for Group 2 to Group 3, Mechanical. Separate test samples are used for Group 3 Environmental tests.
12/ Shock and vibration. Two connector mated pair must be tested. At least four termini mated pair in the two connector mated pair are to be monitored for optical signal discontinuity (and for change in optical transmittance). Any other termini mated pair not monitored for optical signal discontinuity is to be monitored for change in optical transmittance.
13/ An insertion loss verification and a return loss test are required near or after the conclusion of the mechanical tests and after the environmental tests. If both the mechanical tests and the environmental tests are done on the same connector mated pair, then only one insertion loss verification and one return loss test are performed (after the conclusion of the mechanical and environmental tests).
14/ Wavelength integrity. For the optical beam characteristics inspections, perform at both 850 and 1310 for test samples with the multimode fiber size nm wavelength and at both 1310 and 1550 nm wavelength for test samples with the single mode fiber size. Unless otherwise specified, optical inspections are to be performed within the allowed tolerance of the nominal wavelength.
15/ Separate test samples shall be prepared in accordance with MIL-STD-1678-4 Requirement 4105. For each temperature range, wavelength and fiber size; three single mode and three multimode test samples shall be prepared.
16/ For single mode connector mated pair, 4 connector mated pair shall be used for Group 1. From these 4 connector mated pair, each 2 connector mated pair shall be tested as specified in note 11. For multimode connector mated pair, either the same scheme may be used or the same 2 connector mated pair may be used for Groups 1, 2 and 3.
17/ Test samples from the cable pullout test shall be used.
18/ Certifications are required for the lens to show beam interface parameters are met.

TABLE IV. Qualification inspections (except interoperability) - Continued.

19/ Lens termini selected from the group that underwent inspections for un-terminated termini shall be used for each of these tests. These termini test samples shall be prepared as specified in note 8/ for the cable pullout test. Four termini mated pair shall be used for the test samples that undergo the Group 1 tests. For each temperature range, wavelength and fiber size, this test sample quantity applies.

20/ A minimum specified sample size of lens termini selected from the group that underwent inspections for un-terminated termini shall be used for each of these tests. These termini test samples shall be prepared as specified in note 8/ for the cable pullout test. Eight termini mated pair shall be used for the salt spray test. Sixteen termini mated pair shall be prepared for the fluid immersion test. Two termini mated pair shall be used as test samples for each of the eight categories of fluids. The eight termini mated pair from the salt spray test may be used as eight of the sixteen termini mated pair for the fluid immersion test. For each temperature range, wavelength and fiber size, these test sample quantities apply

Inspections for un-terminated termini:

Test sample configuration. Test fixture for this test shall include MIL-DTL-38999 shell size 17, series III connectors, utilizing both plug and receptacle for retaining the termini during testing. For each temperature range, wavelength and fiber size, a minimum sample size shall be used to ensure sufficient quantity for termini inspections as part of a single fiber cable and for termini inspections as an integral part of a multiple fiber connector.

Identification markings. Applicable. The Termini Identification Color Coding (TICC) shall be marked on the barrel of the termini as stated in footnote 8/ of figure 1. Manufacturer's symbol or trademark shall be in accordance with footnote 8/ of figure 1.

Terminus retention. Terminus displacement measurement is not applicable. Test may be used as one operational means to verify acceptable shoulder construction.

Terminus engagement and separation force. Test is not applicable for socket terminus with solid alignment sleeves. For socket terminus with split alignment sleeves, maximum engagement force shall be 30 ounces (8.3 N) using a .0625 inch (1.588 mm) diameter gauge pin. The separation force is not applicable.

Maintenance aging. Applicable. Terminus marking shall remain legible upon completion of testing.

Scratches and defects.
Method: Inspect per Requirement 1305 of MIL-STD-1678-1. Standardized cleaning process with standardized cleaning equipment and consumable supplies (see MIL-STD-1678-6) may be used prior to this inspection.
Requirement: Lens shall meet the end face inspection criteria for scratches and defects specified in the contact zone. The contact zone pertains to visual inspection ferrule end face criteria specified in Requirement 1305 of MIL-STD-1678-1.

Lens abrasion resistance.
Method: Abrade with each cleaning swab with a 1.25 mm (.05 inch) diameter cleaning surface (exposed tip), per item number 6201AE in MIL-STD-1678-6 table 6201-I or equivalent. Abrade by performing the specified cleaning process.
Requirement: There shall be no visible damage, such as evidence of abrasion scratching, crazing, layer separation or anti-reflective (AR) coating removal, to the coated surface. The change in optical transmittance shall be met once the abrading is completed.

Fungus resistance. Not applicable.

Inspections for the terminus as part of a single fiber cable:

Test sample configuration. Each terminus is to be terminated on one end of a single fiber cable as specified in MIL-STD-1678-4 Requirement 4101 up to the processes for ferrule polishing and affixing the lens holder to the ferrule. Cable used is to have provisions compatible with termini strain relief, as applicable. Termini, selected from the group that passed inspections for un-terminated termini, shall be used. Termini shall be tested for each temperature range, wavelength and fiber size. Test sample quantities and configurations shall conform to the applicable notes in the qualification and conformance tables. Three additional lens termini pair (6 lens termini total) shall be prepared for the radiation test for each lens terminus wavelength being qualified. The connector that shall be used as part of a single fiber cable inspections shall be a qualified MIL-STD-1760 connector. If no connector is approved to date, then the connector used shall be specified by the qualifying activity.

Fiber pull out force. Not applicable (This test is used for terminus configurations with no type of cable strain relief).

Cable pull out force. Applicable for terminus configurations with any mechanism for cable strain relief. The change in optical transmittance shall be measured during and after the test for a pin terminus.

Salt spray.

Method: Test samples (termini on single fiber cable) shall be tested to TIA-455-16, test condition C. No corrosive effects shall be seen on the external terminus parts that would be detrimental to the operation of the terminus. The criterion for insertion loss verification shall be used to determine if this optical requirement is met. Insertion loss verification, with termini inserted into a MIL-STD-1760 connector, shall be performed both prior to and after the salt spray test.

Requirement: Examination of the termini tested shall reveal no lens damage, no loss or deterioration of any lens surface coating, no swelling or softening of material, no loss of sealing capability or identification marking, no corrosion, distortion, blistering, or delamination of plating to the degree that it is detrimental to the intended use of these termini. The requirements for insertion loss verification shall be met prior to the test and after the test once salt is removed by cleaning.

Fluid immersion.

Method: Test samples (termini on single fiber cable) shall be tested in accordance with TIA-455-12 using the test fluids in table 3409-AI of MIL-STD-1678-3. Termini shall be immersed in each fluid from the end of the ferrule to half the length of the barrel. The lens is to be exposed to the fluid for this test. The criterion for insertion loss verification shall be used to determine if this optical requirement is met. Insertion loss verification, with termini inserted into a MIL-STD-1760 connector, shall be performed both prior to and after the fluid immersion test.

Requirement: Examination of the termini tested shall reveal no lens damage, no loss or deterioration of any lens surface coating, no swelling or softening of material, no loss of sealing capability or identification marking, and no corrosion, distortion, blistering, or delamination of plating as a result of immersion into each fluid. The requirements for insertion loss verification shall be met prior to the test and after the test once the last fluid is removed by cleaning. No degradation of any sealing shall occur that may cause leakage behind the lens and into the optical path.

Terminus cleaning.

Method: Applicable except cleaning shall include the contamination on the lens by each test fluid in table 3409-AI of MIL-STD-1678-3. Use standardized cleaning process with standardized cleaning equipment and consumable supplies (see MIL-STD-1678-6).

Requirement: Lens shall not be damaged, and there shall be no loss or deterioration of any lens surface coating, separation of bonded surfaces or other damage detrimental to the operation of the termini. The change in optical transmittance shall be met once each test fluid is removed by cleaning.

Inspections of termini in a multiple termini connector:

Test sample configuration:

Number of test samples: For each temperature range, wavelength and fiber size, four test samples (connector mated pair) shall be used for group I inspections except for interoperability. Two of these four mated connector mated pair shall be used for group II inspections and two for group III inspections with one clarification. The same two connector mated pair used in the Group II mechanical (mating durability) inspection shall be used in the Group III mechanical inspections.

Test sample configuration. One of the connector mated pair for group II inspections and one for group III inspections shall be comprised of a cable assembly with termini placed into MIL-DTL-38999 shell size 17, series III connectors. The other one of two connector mated pair for group II inspections and one for group II inspections shall be comprised of a cable assembly with termini placed into MIL-STD-1760 connectors.

Cable assembly construction: These termini/connectors are located in the middle of the cable assembly. Termini, selected from the group that passed inspections for un-terminated termini, shall be used and inserted into MIL-DTL-38999 shell size 17, series III connector or into the MIL-STD-1760 connector as part of the connector mated pair that comprises each test sample. Cable assembly length shall be 10 meters with the connector mated pair inserted 5 meters from the cable ends. Cable length may be longer (with added cable at the optical source end) if cut-backs are performed to verify insertion loss. Each connector shall be fully populated with termini.

Optical measurements: For termini placed into the MIL-DTL-38999 connector, at least 8 randomly selected termini mated pair in each connector mated pair shall be measured for optical transmittance after and when specified, during environmental and mechanical testing. Insertion loss shall be performed on all termini mated pair in each connector mated pair.

Backshell configuration: Connectors used in each connector mated pair, both the plug and receptacle, are to include backshells. Selection of the backshell is to include assurance of proper strain relief for each single fiber cable and not cause degradation in optical performance. Test samples constructed and fiber sizes used shall be as specified in Requirement 4101 of MIL-STD-1678-4 with the process tailored for lens attachment. As specified, separate test samples shall be constructed for interoperability and temperature range 2 using the fiber sizes listed for each configuration constructed.

Interoperability. Applicable, except test for terminus insertion and removal forces is not required. Testing shall be performed using one separately designated connector mated pair with a fully populated, MIL-DTL-38999, series III, shell size 17 connector. Test performance and test sample configurations/fabrication shall conform to Requirement 4101 of MIL-STD-1678-4 with the process tailored for lens attachment. As part of the interoperability inspection, terminus on the end of single fiber cable, shall be inserted and removed from the connector to verify that the strain relief is compatible with the tools listed in table X. Interoperability is applicable only for termini among vendors with the same TICC.

Optical source wavelength. Unless otherwise specified (see optical beam characteristics inspections), lens termini shall be tested at the nominal wavelength specified in table II and table III.

Launch conditions shall conform to MIL-STD-1678-2.

Optical performance:

Attenuation.

Method: Test in accordance with MIL-STD-1678, Measurement 2101. First an attenuation measurement (DUT measurement) shall be obtained at the number of test increments over the wavelength range specified in table V to ensure sufficient coverage for a termini mated pair. Next perform a 1 meter cut back and an attenuation measurement (reference measurement) through only the 1 meter cut back of fiber optic cable at those same increments over the wavelength range. Calculate the spectral attenuation at each wavelength. Present results as a table of attenuation versus wavelength and a plot of attenuation versus wavelength. Repeat for each termini mated pair. Use of a tunable optical source with a power meter to perform this measurement is acceptable.

Requirement: Maximum attenuation over the specific range of wavelengths and at specific wavelengths of operation shall not exceed the maximum values listed in table V.

TABLE V. Attenuation performance.

Wavelength (nm)	Wavelength range (nm)	1 nm increments /range (nm)	Test increments of (nm) 1/	Maximum Attenuation (dB)
1310	1270-1355	85	2	1.5
1550	1530-1570	40	1	1.5
S Band	1460-1530	70	2	1.5
L Band	1565-1625	60	2	1.5
850	750-950	200	4	1.0
1300	1270-1355	85	2	1.0

1/ Perform a measurement at the number of test increments indicated. For example at the 1300 nm wavelength over the wavelength range of 1270 to 1355 nm, obtain a measurement at each 2 nm wavelength increments starting at 1270 nm (i.e., 1270, 1272, 1274, etc. in increments of 2 nm) until reach 1355 nm. Since the number of 2 nm increments in this wavelength range is an odd number, the measurements may end at 1354 nm.

Insertion loss. The initial insertion loss and the insertion loss verification shall be as specified in table VI. The insertion loss limits specified are the maximum allowed values for each measurement (each mating with respect to the pre-cut back measurement). It is not intended to average the ten matings or use other averaging schemes. Insertion loss shall be performed in accordance with MIL-STD-1678-2 Measurement 2101 except test in both directions both for the initial insertion loss and for the insertion loss verification.

TABLE VI. Optical insertion loss performance. 1/

Fiber size (um)	Initial insertion loss (dB) 3/	Insertion loss verification (dB) 2/, 3/
Single mode 9/125	1.5	2.0
50/125	1.0	1.5
62.5/125	1.0	1.5
62.5/125/155	1.0	1.5

1/ Optical loss performance is based on use of specified fabrication procedure.
2/ Insertion loss verification is an insertion loss performed after a series of environmental tests or mechanical tests.
3/ Measure in both directions for lens termini mated pair due to potential deviation in each direction due to the maximum angle error from the mechanical axis and due to parts relative to adhesive expansion and contraction with temperature.

Bit error rate (BER).
Method: Test in accordance TIA-455-235 using the “Variable decision threshold method”. Bit error sampling rates for 50 um core Multimode fiber connections shall include 1, 10, and 40 Gbits per second using a 850 nm VCSEL source. Single mode fiber connections shall include 1, 10, and 40 Gbits per second test setups using a 1310 nm laser source. In addition, the Single mode interconnection shall be test in a WDM condition using 10 different wavelengths from the C Band (1530-1565 nm) with a data rate of 10 Gbits per second.
Requirement: Test Bit pattern sequences at a minimum shall include PRBS 31, and K28.5. Mean bit error ratio shall be less than 10^{-12}.

Polarization-Dependent Loss (PDL).
Method: Test in accordance TIA-455-198 "Measurement of Polarization Sensitivity of Single Mode Fiber Optic Components by Matrix Calculation Method" using the optical source specified for the fiber size/component being tested. First obtain the polarization- dependent loss (PDL) of the fiber optic cable. Next obtain the PDL for each termini mated pair in the connector. The results for these two measurements shall be compared.
Requirement: The PDL for each fiber-lens mated pair in the connector shall be the same as or not greater than two percent above the measurement mean PDL for a termini mated pair. The value for polarization mode dispersion obtained for each termini mated pair in the connector shall be $\leq$ 0.075 dB across the wavelength ranges delineated in table V.

Bandwidth.
Method: Test in accordance with TIA-455-175 using the optical source specified for the fiber size being tested. First obtain the bandwidth through only the fiber optic cable. Next obtain the bandwidth for each termini mated pair in the connector. The results for these two measurements shall be compared.
Requirement: The bandwidth for each termini mated pair in the connector shall be the same as or not greater than one percent below the bandwidth for only the fiber optic cable. The value for bandwidth obtained for each termini mated pair in the connector shall be $\geq$ 300 MHz@850nm for an overfilled launch and $\geq$ 300 MHz@850nm for the RML/EMB_c launch.

Environmental/mechanical: Termini shall be tested to and meet the requirement as specified under “Tests for termini as an integral part of a multiple termini connector”. Change in optical transmittance and optical discontinuity requirements shall be as specified in MIL-PRF-29504.

Interoperability. Applicable. Separate test samples shall be prepared for interoperability.

Mechanical. The following mechanical tests shall be performed in the sequence listed in table IV. For single mode termini, a discontinuity is considered to be a reduction of optical transmittance of 0.5 dB or more for a duration of 50 microseconds or more (during vibration) or 100 milliseconds or more (during shock).

Mating durability. Applicable except that terminus engagement and separation force does not need to be performed after the test. The lens termini shall be cleaned after each 100 cycles. The change in optical transmittance shall be 0.5 dB or less over 500 cycles. A return loss after mating durability shall be performed. Return loss of 30 dB or greater shall be obtained after 500 cycles with no re-polishing or otherwise refurbishment of the lens.

Twist.

Method: Connector mated pair shall be tested in accordance with TIA-455-36. The terminus-held fixture shall be rotated 360° at a rate of one cycle per 5 seconds for a total of 50 cycles. One cycle shall consist of a 360° twist ±180° about the neutral axis. The connector mated pair tested shall be placed in tension with minimum loading of 11.0 pounds (48.9 N) applied (such as clamped) at a distance of about 12 inches below the optical (connecting) interface. The connector mated pair shall be visually examined after the test including the key on the terminus. The change in optical transmittance shall be measured during and after the test.

Requirement: No terminus damage shall occur. The change in optical transmittance shall be less than 0.5 dB during and after the test.

Mechanical shock.

Method: Mated connector mated pair shall be tested in accordance with the applicable mechanical shock test listed below. Optical discontinuities shall be measured during the test. A minimum of four termini shall be monitored for discontinuity. The change in optical transmittance shall be monitored after the test. The termini shall be visually examined after the test to the extent feasible inside the connector. For testing, initially mate the connector mated pair and apply the specified torque value. Mark the position after the torque has been applied and check/record position after each impact. For a connector mated pair containing a coupling ring ratchet mechanism, do not tighten the coupling ring after each impact if the connector is being tested in addition to the terminus. Otherwise, retighten after each impact.

a. MIL-DTL-901. Mated connector mated pair shall be tested in accordance with MIL-DTL-901, grade A, type B, class I. Standard shock fixture 4A for bulkhead mounting shall be used. Supplement test fixture with mounting shall be performed as specified in Measurement 3202 of MIL-STD-1678-3.

b. Half-sine pulse. Mated connector mated pair shall be tested in accordance with TIA-455-14, test condition D. Three shocks in each direction shall be applied along the three mutually perpendicular axes of the test sample (18 shocks).

Requirement: Termini shall not be damaged and there shall be no loosening of parts. The requirement for optical discontinuity shall be met during the test and the requirement for the change in optical transmittance shall be met after the test.

Vibration.

Method: Mated connector mated pair shall be tested for sinusoidal vibration in accordance with the applicable vibration tests listed below. Optical discontinuities shall be measured during the test. For connectors of shell sizes 17 and greater, a minimum of four termini shall be monitored for discontinuity. The change in optical transmittance shall be monitored after the test. The termini shall be visually examined after the test to the extent feasible inside the connector. For testing, initially mate the connector assemblies and apply the specified torque value. Mark the position after the torque has been applied and check/record position after each axis. For a mating connector containing a coupling ring ratchet mechanism, do not tighten the coupling ring during testing.

a. Sine vibration shall be performed in accordance with MIL-STD-1678-3 Measurement 3201, test conditions C, 5.3.a (60 G at ambient temperature only). This cycle shall be performed 12 times in each of three mutually perpendicular directions at ambient temperature. This results in a total of 36 cycles being applied for approximately 12 hours. The sequence shall be repeated twice. (36 hours total at ambient temperature). Interruptions are permitted provided the requirements for rate of change and test duration are met. Completion of cycling within any separate band is permissible before proceeding to the next band.

b. Random vibration shall be performed in accordance with MIL-STD-1678-3 Measurement 3201, test conditions C, 5.3.b (41.7 G rms at a temperature of 125^0C).

c. Random vibration shall be performed in accordance with MIL-STD-1678-3 Measurement 3201, test conditions C, 5.3.c (49.5 G rms at an ambient temperature).

Requirement: Termini shall not be damaged, and there shall be no loosening of parts, no backing off of the coupling mechanism, and no other damage which can produce physical distortion or wear and may result in fatigue of the mechanical parts. The requirement for optical discontinuity shall be met during the test and the requirement for the change in optical transmittance shall be met after the test.

Environmental. The following environmental tests shall be performed in the sequence listed in table IV.

Thermal shock.

Method: The temperatures of -55°C +0°C, -5°C and 165°C +5°C, -0°C shall be used for the low and high soak temperatures, respectively. Mated connector assemblies shall be tested in accordance with TIA-455-71, schedule C-0 (5 cycles). The mated connector mated pair shall not be un-mated then re-mated after the test as part of the inspection. The change in optical transmittance shall be measured during (towards the end of each soak temperature) and after the test. The termini shall be visually examined after the test only if optical performance is not met.

Requirement: Termini shall not be damaged, and there shall be no loosening of parts, separation of bonded surfaces or other damage detrimental to the operation of the termini. The requirement for the change in optical transmittance shall be met during and after the test.

Temperature/humidity cycling.

Method: Mated connector mated pair shall be tested in accordance with method B of TIA-455-5. The sub-cycle shall be included in the testing. The change in optical transmittance shall be measured during and after the test.

Requirement: Termini shall not be damaged, and there shall be no loosening of parts, separation of bonded surfaces or other damage detrimental to the operation of the termini. The requirement for the change in optical transmittance shall be met during and after the test.

Temperature cycling.

Method: Mated connector mated pair shall be tested in accordance with TIA-455-3 using the setup procedure specified in Measurement 3301 of MIL-STD-1678-3 with the temperature profile in table 3301-II. The connector mated pair shall be visually examined after the test. Test fixtures, if used must be of minimum mass and approved by the qualifying activity. No other mass shall be added inside the chamber. The change in optical transmittance shall be measured during and after the test. At a minimum for the “during test” measurements, an optical transmittance measurement shall be performed towards the end of each soak period (maintain step) after every 50 cycles. The connector mated pair shall be visually examined after the test.

Requirement: Termini shall not be damaged, and there shall be no loosening of parts, separation of bonded surfaces or other damage detrimental to the operation of the termini. The requirement for the change in optical transmittance shall be met during and after the test.

Altitude immersion.

Method: Mated connector mated pair shall be tested in accordance with TIA-455-15. The complete connector mated pair shall be located within the chamber, with the entire mated connector submerged in a distilled water tank within the chamber. Instrument end connections shall not be submerged and shall be either routed outside the chamber or to an optical interface port. The change in optical transmittance shall be measured during and after the test. During each test cycle, optical transmittance measurements shall be made at each ramp and during the plateau.

Requirement: Mated connector mated pair shall not be damaged and there shall be no evidence of moisture penetration into the connector interior. The requirement for the change in optical transmittance shall be met during and after the test.

Temperature life.

Method: The high exposure temperature shall be 165°C +5, -0°C. Mated connector mated pair shall be tested in accordance with TIA-455-4 for the duration of 1,000 hours at the high exposure temperature. The change in optical transmittance shall be measured after the test. The termini shall be visually examined after the test to the extent feasible inside the connector.

Requirement: Termini shall not be damaged, and there shall be no loosening of parts, separation of bonded surfaces or other damage detrimental to the operation of the termini. The requirement for the change in optical transmittance shall be met after the test. Performance of a cable/fiber retention test is not required as part of the final inspection for this test.

Flammability.

Method: Portion of the connector mated pair containing the mated termini mated pair shall be exposed to a 0.75 inch (19 mm) flame height applied for ten seconds to the region of the mated pair interface. The change in optical transmittance shall be measured during the test, and after the test once the connector mated pair has returned to room temperature.

Requirement: There shall be no dripping of the lens and other terminus material that will cause the flammable material to ignite and there shall be no violent burning or explosive type fire. The requirement for the change in optical transmittance shall be met during and after the test.

Insertion loss (verification): If the cut back method is used after the mechanical or environmental tests are concluded, then return loss may be performed prior to the insertion loss verification.

Radiation (Nuclear radiation resistance).

Method: Mated termini mated pair shall be tested for susceptibility to gamma radiation in accordance with TIA/EIA-455-64 using the test conditions listed in table VII. Optical characteristics shall be verified at the low operating temperature and at +25°C. The change in optical transmittance shall be measured during and after the test. If the change in optical transmittance at +25°C is greater than the change in optical transmittance at the low operating temperature, the fiber shall be tested at the high operating temperature. Light launch conditions shall be in accordance with TIA-455-78. For single mode termini mated pair, test shall be performed at a wavelength of 1310 $\pm$ 25 nm using a laser diode with FWHM spectral width $\leq$ 10 nm. For multimode termini mated pair, test shall be performed at a wavelength of 1300 $\pm$ 25 nm using an LED with FWHM spectral width $\leq$ 160 nm.

Requirement: Mated pair shall meet the nuclear radiation resistance requirements as listed in table VIII.

Table VII. Steady state gamma radiation test conditions.

Test temperature (^{0}C)	Dose rate (rad (Si)/sec)	Total dose (rad (Si)) 1/
-28 ± 2 +25 ± 2 +85 ± 2	50 +0/-20	Classified

1/ Some nuclear radiation resistance characteristics of this lens are classified and shall be obtained from the qualifying activity. Application to receive these requirements must be made through the Department of the Navy, Naval Surface Warfare Center, Dahlgren Division, ATTN: Code B35, 17320 Dahlgren Road, Dahlgren, VA 22448-5100. Information concerning security clearance classification and "need to know" must be detailed in the request.

Table VIII. Radiation test requirements.

Maximum induced attenuation (dB) 2/	Attenuation at specific recovery time (dB) 2/	Specified recovery time (sec)
≤ 5 1/	≤ 3 at -28^{0}C (-18 ^{0}F) ≤ 2 at 25^{0}C (77^{0}F) ≤ 2 at 85^{0}C (185^{0}F) 1/	1,000

1/ The radiation induced loss for a given threat. The total dose associated with the threat is classified and not necessarily equal to the test total dose.
2/ Requirement for induced attenuation in lens (dB).

Qualification by similarity. Qualification inspection shall be performed on test samples configured in accordance with MIL-STD-1678-4 Requirement 4101.

a. Qualification of termini with different ferrule hole diameters.
(1) Manufacturers who qualify under this specification sheet for the terminus of a specific wavelength range and with the ferrule hole diameter specified in column three of table IX are qualified under this specification sheet for the other cladding hole diameter(s) in column four on the same row of table IX.
(2) Constraint for qualification by similarity case listed above. This qualification by similarity case is valid if the only difference between the qualified termini and the other termini listed in the same row of table IX is a change in the terminus ferrule hole diameter and TICC markings.

b. Qualification of termini for change in design or material.
(1) Perform complete re-qualification.

Table IX. Termini Qualification by similarity.

Fiber Type 1/	Ferrule Material	Qualified with Hole Diameter	Get Other Hole Diameter(s)	Qualified with TICC	Get other TICC	Qualified with TICC	Get other TICC
SM	Ceramic	125.5	125.3	4333	4329	4334	4330
MM 2/	Ceramic	126	156	4335	4337	----	----

1/ SM = Single mode, MM = Multimode (50/125, 62.5/125 fiber sizes)
2/ Qualified with 50/125 micron fiber size, see MIL-STD-1678-4 Requirement 4101

Usage: Termini compliant with this specification sheet may be used in connectors other than MIL-STD-1760 at the discretion of the acquiring activity.

Cleaning prior to packaging. Termini shall be cleaned prior to packaging/shipment internally (for ensuring proper adherence of epoxy to terminus barrel (body) and ferrule and externally (for minimizing contamination).

Tools: See table X.

TABLE X. Tools.

Tool	PIN
Insertion tool	M81969/14-03
Removal tool	M81969/14-03
Polishing tool	TBD

Conformance tests (Group A, B and C).

a. Group A. Group A shall consist of the inspections/tests specified for Group A in table XI.

Group A sampling plan. Group A shall be performed by random sampling for product supplied under this specification. This random sampling shall be performed to MIL-STD1678-1 Requirement 1304. Number of samples for random sampling inspected per lot size is specified in table 1304-1 of MIL-STD1678-1 Requirement 1304. The required acceptance criterion is a zero nonconformance regardless of sample size.

Group A sampling plan for occurrence of a nonconformance. If any nonconformance is found, then 100 percent inspection shall be used until the qualifying activity is satisfied that the cause for the nonconformance has been corrected and will not reoccur. Also, until the nonconformance has been corrected, inspection with the requirement that data be provided (in lieu of inspection by attribute) may be specified by the qualifying activity.

TABLE XI. Conformance inspections (Groups A, B and C).

Test performed 1/, 2/	Groups A, B ,C Temperature Range 2 3/	Group C Groups I, II, III	Number of Termini/ Number of mated pair 9/, 13/
Tests for unterminated termini			
Group 1			
Size 5/	A		---
Identification markings 5/	A		---
Workmanship 5/	A		---
Circular runout 5/	B		---
Beam interface parameters 15/	B		---
Group 2 5/, 6/, 7/			
Terminus insertion & removal forces	B		16 termini 14/
Terminus retention	B		16 termini
Maintenance aging	B		16 termini from terminus retention
Group 3 (polymeric materials)			
Ozone	C	Group III	
Tests for termini as part of a single fiber cable			
Group 2			
Insertion loss		Group II	16 termini – cable pullout, 16 termini – fiber pullout
Fiber pull out force 8/		Group II	16 termini
Cable pull out force 8/	C	Group II	16 termini
Twist	C	Group II	16 termini from cable pullout
Tests for termini as an integral part of a multiple termini connector			
Group 1 4/, 9/, 12/			
Optical tests			
Insertion loss 11/	C	Group I	2 connector mated pair- # 1,2
Return loss 11/	C	Group I	2 connector mated pair- # 1,2
Group 2 4/, 9/, 12/			
Mating durability	C	Group II	1 connector mated pair- # 1
Group 3 4/, 9/, 12/			
Mechanical tests 9/			
Vibration 10/	C	Group III	1 connector mated pair- # 1
Shock, MIL-DTL-901 10/	C	Group III	1 connector mated pair- # 1
Environmental 4/, 9/, 12/			
Thermal shock	C	Group III	1 connector mated pair- # 2
Temperature cycling	C	Group III	1 connector mated pair- # 2

TABLE XI. Conformance inspections (Groups A, B and C) – Continued.

Notes:

1/ Conformance consist of performing tests in this table for temperature range 2 (TR2). Conformance tests are those inspections specified for unterminated termini (groups A, B), termini as part of a single fiber cable (group C) and termini as an integral part of a multiple termini connector (group C).

2/ "A", "B" and "C" indicates test applies when performing a Group A, B or C Conformance test.

3/ Assumes same terminus material and physical configuration (see note 9/). These test sample quantities apply for each temperature range, wavelength and fiber size.

4/ For Group C conformance testing, use a MIL-DTL-38999 shell size 13 connectors with a 4 cavity insert. Connector is to be fully populated with PC polished termini. All insert cavity positions are to be active (monitored). Use of other connector configurations is not allowed (such as one MIL-DTL-38999 shell size 17 with an 8 cavity insert in lieu of two MIL-DTL-3899 shell size 13 connectors with 4 cavity inserts).

5/ These inspections are to be performed by the manufacturer at the production facility. Exception may be taken for weight, circular run out, terminus retention, terminus insertion and removal forces and maintenance aging.

6/ Test fixture for this test is to include fiber optic; MIL-DTL-38999 connectors; either plug or receptacle for retaining the termini during testing.

7/ Test performed using connector in which the ASR is not inserted.

8/ Each terminus is to be terminated on one end of a single fiber cable. Cable used is to have provisions compatible with termini strain relief, as applicable. Termini, selected from the group that underwent inspections for un-terminated termini, shall be used. A minimum sample size of 8 pin termini and 8 of the applicable counterpart socket termini, selected from the group that underwent inspections for un-terminated termini, shall be used for each of these tests. These test sample quantities apply for each temperature range, wavelength and fiber size.

Fiber pullout. Separate test samples of the termini must be prepared on single fiber cable without any strain relief. The change in optical transmittance shall be met after the test.

Cable pullout. Separate test samples of the termini must be prepared on single fiber cable with strain relief (aramid yarn on cable affixed to terminus via the crimp sleeve). The change in optical transmittance shall be met after the test.

9/ Number of connector mated pair for group C. Two connector mated pair shall be tested for each PIN undergoing group C testing. The group C tests must be performed for each row in table VIII for which termini are offered.

10/ Shock and vibration. One connector mated pair shall be tested (see note 4/). The four termini pair in the connector mated pair are to be measured for optical signal discontinuity and for change in optical transmittance. Vibration testing is limited to performing the 5.3.c random vibration in Measurement 3201 of MIL-STD-1678-3.

11/ An insertion loss verification and a return loss test shall be performed at the start of Group C testing and on any termini mated pair used in Group B. The initial insertion loss and return loss shall be performed on any new termini mated pair used in Group C testing. The one exception is that return loss shall be performed only on termini with single mode fiber.

12/ Termini to be placed in each mated pair shall be selected based on table XIII.

13/ For each test in group C, the column for "Number of mated pair" first specifies the total number of connector mated pair tested followed by the which connector mated pair are used for that test (each connector mated pair being assigned a number.

14/ When maintenance aging is performed, the first and last maintenance aging cycle can be used as the terminus insertion and removal force test. Otherwise, perform in the sequence listed (on the 16 termini prior to and used for the terminus retention test).

15/ Certifications are required to show beam interface parameters are met.

b. Group B. Group B shall consist of the inspections/tests specified for Group B in table XI on termini 24 months after initial qualification and within each 2 year period thereafter.

Group B test sample configurations.
(1) Unterminated termini. No test sample preparation is required for circular runout, terminus insertion and removal forces, terminus retention, and maintenance aging.

Group B sampling plan. A minimum of sixteen sample units shall be selected from a lot of the same PIN within 24 months after the date of notification of qualification and during every 24 month period thereafter. When a manufacturer is qualified for multiple TICCs/PINs, then the group B inspection shall be performed every two year period on at least one TICC from each row in table XII where the manufacturer has qualified parts. The terminus selected from each row shall be such that after two, three or four consecutive group B inspections (as applicable), all qualified TICCs/PINS from the same row in table XII have been inspected. If a manufacturer is qualified for only 1 TICC in a particular row, then that TICC shall be inspected during every two year period.

Table XII. Termini Group B sampling plan by TICC.

Temperature Range/ Nominal Wavelength/ Fiber Diameter	TICC 1/	Fiber Type 2/	Group B Period 1	Group B Period 2	Group B Period 3	Group B Period 4	Fabrication Remarks
2, 1310/1300 nm, 125 um	4329,4333,4336	SM, MM	4329	4336	4333	4329	3/
2, 1550/850 nm, 125/155 nm	4330,4334,4335,4337	SM, MM	4330	4335	4334	4337	4/, 5/
2, S Band & L Band, 125 nm	4331,4332	SM	4331	4332	4331	4332	4/

1/ If not qualified for all TICCs in a particular row alternating inspections shall be performed for the qualified TICCs. (Ex: If qualified for 4329 and 4333, but not 4336, perform alternating inspections of 4329 and 4333, i.e., perform inspection on 4329 during Period 1 and during Period 3, perform inspection of 4333 during Period 2 and during Period 4).
2/ SM = single mode, MM = multimode.
3/ Temperature range 2: see MIL-STD-1678-4 Requirement 4101 Appendix B.
4/ Temperature range 2: see MIL-STD-1678-4 Requirement 4101 Appendix B.
5/ Qualified with polyimide coated optical fiber, see MIL-STD-1678-4 Requirement 4101 for cable type.

c. Group C. Group C shall consist of the inspections/tests specified for Group C in table XI on termini 60 months after initial qualification and within each 5 year period thereafter.

Group C test sample configurations.
(1) Unterminated termini. Test samples for ozone shall consist of a minimum of 16 seals (O-rings or other configurations used) on a dowel or similar fixture. Diameter of dowel shall be the same as that of the terminus. Other, 16 termini shall be tested.
(2) Termini as part of a single fiber cable. Test samples shall be fabricated on termini of the same PIN as described in the applicable note in table XIII for single fiber cables.
(3) Termini as part of a multiple termini connector. Test samples shall be fabricated as specified in Requirement 4101 of MIL-STD-1678-4 (the process tailored for lens attachment) with one exception. Termini of the same PIN shall be cabled and inserted into the insert cavities of MIL-DTL-38999 shell size 13 connectors with a 4 cavity insert (i.e., four termini mated pair per connector mated pair) as specified in Requirement 4101 of MIL-STD-1678-4. Two connector mated pair shall be used for each row as listed in table XIII.

Group C sampling plan. Group C inspection shall be performed on termini of the same PIN from the highest production volume of each row in table XIII. For tests on termini as an integral part of a multiple termini connector, the two connector mated pair shall be subjected to group 1 tests for each row in table XIII. For one mated pair in each row of table XIII, the connector mated pair undergoes the group 1 tests followed by the group 2 and group 3 mechanical tests. For the other mated pair in each row of table XIII, the other connector mated pair undergo group 1 tests followed by group 3 environmental tests. The terminus shall be selected such that the terminus is chosen with the ferrule hole diameter in each row of table XIII with the largest volume of product produced during the five year Group C period.

Table XIII. Termini Group C sampling plan by temperature range and TICC.

Temperature Range/Fiber Diameter/Wavelength	TICC 1/	Fiber Type 2/	Sampling Plan (base on production volume)	Termini as a part of a		Fabrication Remarks
				Single Fiber Cable	Multiple Fiber Connector 4/	
2 125 um 1310/1300 nm	4329, 4333	SM	Select highest volume SM from 5 year period; 4329 or 4333	3/	Mated Pair 1 Mated Pair 2	5/
2 125 um 1310/1300 nm	4336	MM	Select highest volume MM from 5 year period; 4336	3/	Mated Pair 1 Mated Pair 2	5/
2 125 um 1550/850 nm	4330, 4334	SM	Select highest volume SM from 5 year period; 4330 or 4334	3/	Mated Pair 1 Mated Pair 2	6/
2 125/155 um 1550/850 nm	4335, 4337	MM	Select highest volume MM from 5 year period; 4335 or 4337	3/	Mated Pair 1 Mated Pair 2	6/
2 125 um S & L Bands	4331, 4332	SM	Select highest volume SM from 5 year period; 4331 or 4332	3/	Mated Pair 1 Mated Pair 2	7/

1/ Select highest volume from 5 year period for each row of termini being offered.
2/ SM = single mode, MM = multimode.
3/ The minimum number of termini of the same PIN needed for Group C inspection of termini as part of a single fiber cable is as follows: Fiber pullout force = 16, Cable pullout force = 16.
4/ See table VI for tests to be performed for each mated pair.
5/ Temperature range 2: see MIL-STD-1678-4 Requirement 4101 Appendix B.
6/ Temperature range 2: see MIL-STD-1678-4 Requirement 4101 Appendix B.
7/ Qualified with polyimide coated optical fiber, see MIL-STD-1678-4 Requirement 4101 for cable type.

Part or identifying number (PIN): See table II herein and 6.6 of MIL-PRF-29504.

M29504/25	-	XXXX
Basic specification and specification sheet		TICC code (see table II)

PIN Example: M29504/25-4329

Cleaning prior to packaging. Termini shall be cleaned prior to packaging/shipment internally (for ensuring proper adherence of epoxy to terminus barrel (body) and ferrule and externally (for minimizing contamination).

Definitions.

Barrel. The barrel is the part of the terminus that provides the means of holding the ferrule within the terminus on one end and may be used as the surface to affix the crimp sleeve (or provide other means of cable strain relief) on the other end. Also, the barrel may be referred to as the terminus body.

Ferrule. A mechanical fixture, generally a rigid tube, at one end of the terminus used to hold and secure the stripped end of an optical fiber attached to the terminus. The ferrule functions as a bushing and is one means to precisely position the optical fiber.

Fiber-lens assembly. The configuration that consists of light being transmitted through one end of an optical fiber and exiting a lens located at the other end of the optical fiber. Measurements are taken of fiber-lens assembly primarily to optimize lens positioning during the fabrication process.

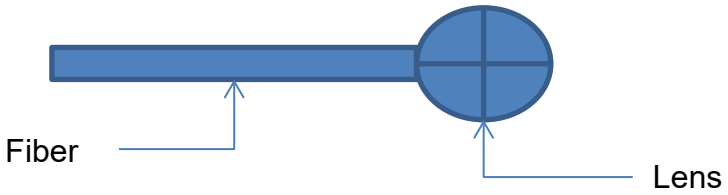

Fiber-lens mated pair. The configuration composed of two fiber-lens assemblies. For the launch (transmit) end fiber-lens assembly, light being transmitted through one end of an optical fiber (end P1) and exiting a lens located at the other end of the optical fiber. For the detection (receive) end fiber-lens assembly, light is transmitted from the second lens located at one end of the optical fiber and exits at the other end of the optical fiber (end P2). Measurements are taken of fiber-lens mated pair for qualification testing to duplicate use in the application.

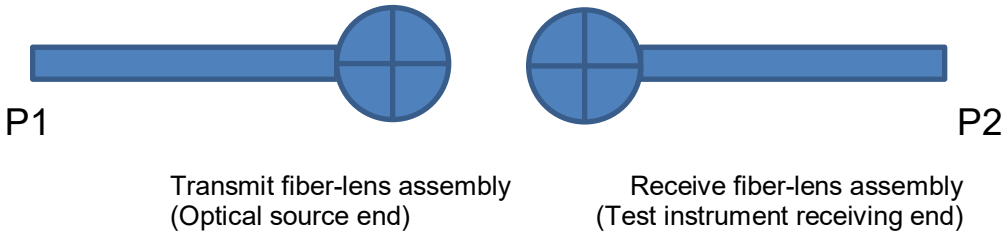

Lens holder. The piece of the lens terminus that houses the lens, is attached to the ferrule, and is placed into the alignment sleeve (i.e., alignment sleeve retainer or ASR).

Working distance. The working distance is the focal distance from the objective (launch lens) front surface to the focus point (in this case the receiving lens). However, in this application, the objective lens focus is virtual (negative – inside or close to the front surface the objective lens due to the high index glass) there is no real focus point in front of the objective. So, in this case, the closer the lenses are the better the performance. A distance of 1.0 mm was chosen because it was within the optical system Rayleigh range (the focus distance +/- range [really on the + part of the range]) and is an achievable distance to manufacture. Even if a manufacturer uses a different index glass (shifting the focal point) that distance should be sufficient (within the specified working distance). Different glass prescriptions will produce slight asymmetrical insertion loss results but should be within tolerance if they are close in value to each other.

Termini. A component used in a fiber optic, multiple termini, connection that is inserted into one of the insert cavities of a multiple termini connector, provides a means to break and rejoin an optical path, and is terminated onto the end of a simplex, fiber optic cable. The term “termini” is the plural form for the word terminus.

Terminus. Singular form for the word termini.

Terminus, pin. The male configuration of a terminus that consists of a metal barrel (body) and a metal or ceramic ferrule.

Terminus, socket. The female configuration of a terminus that consists of a metal barrel (body), a metal or ceramic ferrule and an alignment sleeve. The alignment sleeve attaches to the socket terminus ferrule. Fiber alignment occurs when the pin terminus slides into the alignment sleeve of the socket terminus.

Referenced documents. In addition to MIL-PRF-29504, this specification sheet references the following documents:

MIL-DTL-901	MIL-STD-1678-1	MIL-STD-1678-2	MIL-STD-1678-3	MIL-STD-1678-4
MIL-STD-1678-6	MIL-STD-1760	MIL-PRF-29504/24	MIL-DTL-38999	MIL-PRF-64266
TIA-455-3	TIA-455-4	TIA-455-5	TIA-455-12	TIA-455-14
TIA-455-15	TIA-455-16	TIA-455-36	TIA-455-64	TIA-455-71
TIA-455-78	TIA-455-175	TIA-455-198	TIA-455-235	SAE-AIR1351

Custodians:
Army - CR
Navy - SH
Air Force - 85
DLA - CC

Review activities:
Navy - AS
Air Force - 13, 19, 93
NASA - NA

Preparing activity:
DLA - CC

(Project 6060-2020-002)

NOTE: The activities listed above were interested in this document on the date of this document. Since organizations and responsibilities can change, you should verify the currency of the information above using the ASSIST Online database at https://assist.dla.mil.