INCH-POUND
MIL-PRF-27/340E
AMENDMENT 3
01 November 2023
SUPERSEDING
MIL-PRF-27/340E
AMENDMENT 2
10 September 2018

PERFORMANCE SPECIFICATION SHEET

TRANSFORMERS, POWER, 15 VOLTAMPERES, 400 HZ

This specification is approved for use by all Departments and agencies of the Department of Defense.

The requirements for acquiring the product described herein shall consist of this specification sheet and MIL-PRF-27.

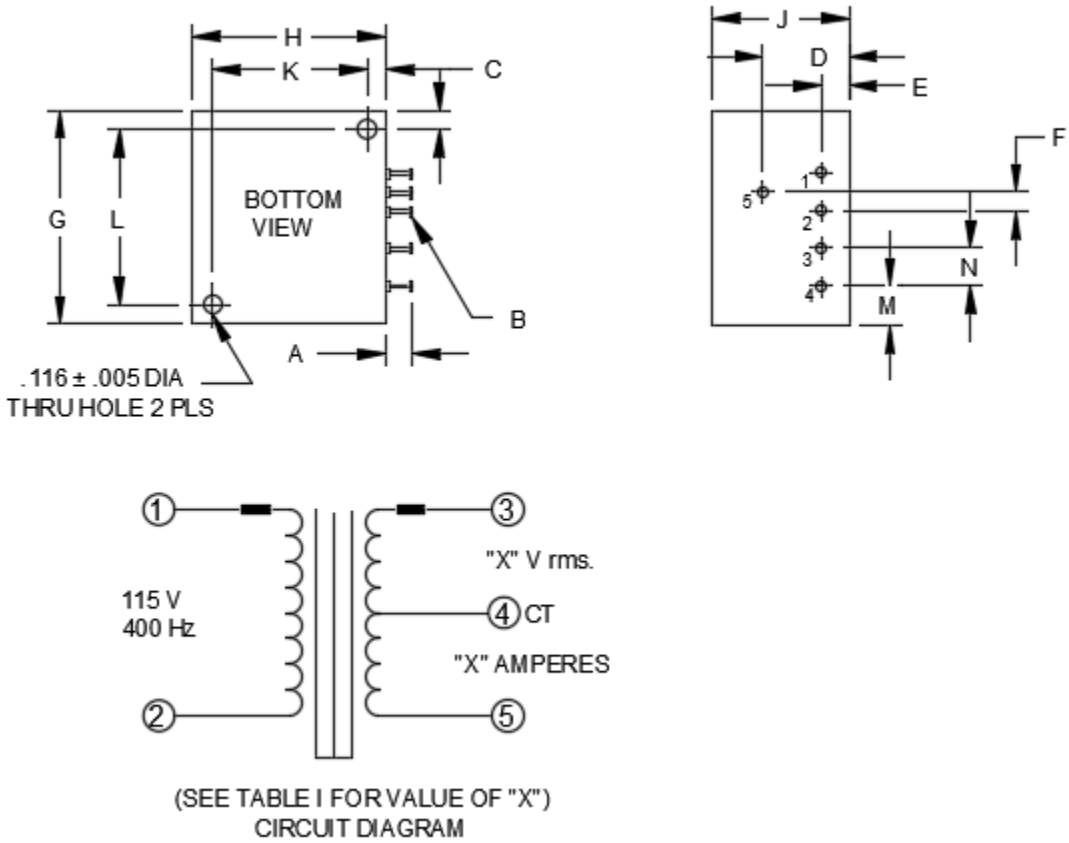

FIGURE 1. Dimensions and configurations.

AMSC N/A FSC 5950

DISTRIBUTION STATEMENT A. Approved for public release; distribution is unlimited.

	Inch	mm
A	.169	4.29
B	.062 ±.010 DIA	1.57 ±0.25 DIA
C	.125	3.18
D	.375	9.53
E	.187	4.75
F	.125	3.18
G	1.43 ±.015	36.3 ±0.38
H	1.24 ±.015	31.5 ±0.38
J	1.27 ±.015	32.3 ±0.38
K	0.99 ±.015	25.1 ±0.38
L	1.18 ±.015	30.0 ±0.38
M	.250 ±.031	6.35 ±0.79
N	.250 TYP	6.35 TYP

NOTES:
1. Dimensions are in inches.
2. Metric equivalents are given for general information only.
3. Marking shall be on the top and sides of the case.
4. Dimensional tolerance shall be ±.031 unless otherwise specified.
5. Dimensions G and H to be measured at top of transformer.

FIGURE 1. Dimensions and configurations – Continued..

REQUIREMENTS: (When numbers in parentheses, i.e., (1-2) are used, they indicate the winding and the extreme terminals of the winding.)

Electrical ratings:

Primary voltage (1-2): 115 volts rms, 400 ±20 hertz.

Secondary voltage and current (3-5): See table I.

Volt-ampere: 15 voltamperes.

Working voltage (1-2): 535 volts peak.

Design and construction:

Dimensions and configuration: See figure 1.

Duty cycle. Continuous.

Case: Encapsulated.

Material: Epoxy fiberglass or Diallyl phthalate.

Terminals: Turret type.

Height: .169 inch.

Weight: .28 pound, maximum.

Operating temperature range. -55° to +130°C.

Altitude: 70,000 feet.

Terminal strength: MIL-STD-202-211, test condition A, 2 pounds.

Dielectric withstanding voltage (each winding):

At sea level: 1500 volts rms.

At reduced barometric pressure: 1.25 times the peak working voltage specified.

Electrical characteristics:

Rated load: With 115 volts rms and 400 Hz in (1-2), and rated current in secondary, the voltage across (3-5) shall be as specified in table I.

DC resistance:

(1-2): 14 ohms ±25 percent.

(3-5): See table I.

Temperature rise: 45°C with 115 volts rms, 400 hertz across (1-2) at an ambient temperature of 85°C, full load terminals (3-5).

Regulation: $\frac{Voltage\ (no\ load) - Voltage\ (rated\ load)}{Voltage\ (rated\ load)}\ x\ 100$

Shall not exceed 10 percent.

Polarity: Additive with terminals 2 and 3 connected.

Marking location: See figure 1.

Part or Identifying Number (PIN): M27/340-(dash number from table I).

TABLE I. Electrical ratings.

Dash number M27/340	Secondary voltage (3-5) (V rms) ±5% (CT)	Secondary current (3-5) (amperes)	Secondary DCR (3-5) (ohms) ±25%
-01	5.0	3.0	.052
-02	6.3	2.38	.088
-03	8.0	1.8	.135
-04	10.0	1.5	.27
-05	12.6	1.18	.32
-06	14.0	1.07	.35
-07	16.0	.94	.54
-08	18.0	.832	.74
-09	20.0	.750	1.4
-10	22.0	.680	.92
-11	25.0	.600	1.3
-12	28.0	.535	1.83
-13	31.0	.485	1.62
-14	35.0	.428	2.28
-15	39.0	.384	2.54
-16	43.0	.348	2.85
-17	48.0	.312	4.05
-18	55.0	.262	7.2
-19	63.0	.238	6.51
-20	70.0	.214	9.4
-21	80.0	.198	13.4
-22	90.0	.166	15.9
-23	100.0	.150	16.8
-24	110.0	.136	22.1
-25	123.0	.122	30.7
-26	138.0	.108	36.0
-27	157.0	.095	53.0
-28	175.0	.085	56.0
-29	200.0	.071	65.0
-30	220.0	.068	91.5
-31	26.0	.577	1.35
-32	115.0	.130	23.10

VERIFICATION:

Extent of qualification:

Qualification testing and approval to M27/338-28 and M27/343-32 shall be sufficient to grant qualification approval to MIL-PRF-27/338 through MIL-PRF-27/343 inclusive, all parts.

Qualification testing and approval to M27/340-32 shall be sufficient to grant qualification approval to M27/340-01 through M27/340-32.

Amendment notations. The margins of this specification are marked with vertical lines to indicate modifications generated by this amendment. This was done as a convenience only and the Government assumes no liability whatsoever for any inaccuracies in these notations. Bidders and contractors are cautioned to evaluate the requirements of this document based on the entire content irrespective of the marginal notations.

Referenced documents. In addition to MIL-PRF-27, this document references the following:

MIL-STD-202-211

Custodians:
Army - CR
Navy - EC
Air force – 85
DLA - CC

Preparing activity:
DLA - CC

Review activities:
Army – AR, CR4
Navy - AS, MC, OS
Air Force - 19

(Project 5950-2023-034)

NOTE: The activities listed above were interested in this document as of the date of this document. Since organizations and responsibilities can change, you should verify the currency of the information above using the ASSIST Online database at https://assist.dla.mil.