INCH-POUND

NOTE: This draft dated 18 April 2018, prepared by DLA Land and Maritime has not been approved and is subject to modification. DO NOT USE FOR ACQUISITION PURPOSES.

MIL-PRF-27/370B
AMENDMENT 1
DRAFT
SUPERSEDING
MIL-PRF-27/370B
12 April 2013

PERFORMANCE SPECIFICATION SHEET

INDUCTOR, POWER, HIGH CURRENT, SURFACE MOUNT

This specification is approved for use by all Departments and Agencies of the Department of Defense.

The requirements for acquiring the product described herein shall consist of this specification sheet and MIL-PRF-27.

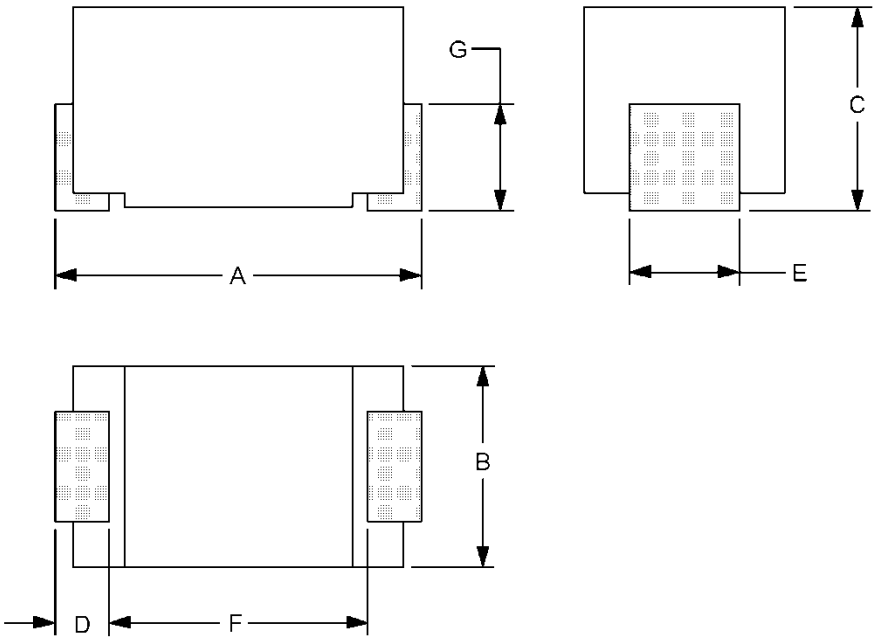

NOTES:
1. Dimensions are in inches.
2. Metric equivalents are given for general information only.
3. Marking shall be on the top of the case.

	Inches	mm
A	0.840 to 0.880	21.34 to 22.35
B	0.260 to 0.330	6.60 to 8.38
C	0.266 to 0.286	6.76 to 7.26
D	0.050 min	1.27 min
E	0.060 to 0.110	1.52 to 2.79
F	0.750 (Ref. Only)	19.05 (Ref. Only)
G	0.120/0.150 (Ref. Only)	3.05/3.8 (Ref. Only)

FIGURE 1. Dimensions and configuration.

AMSC N/A

FSC 5950

TABLE I. Electrical characteristics (initial).

Dash number	Inductance (μH) ±15% 1/	DC resistance ohms (max)	Current rating (Amps) (max)	Incremental current (Amps) 2/
-01	1.0	0.009	6.27	6.4
-02	1.2	0.010	5.95	5.8
-03	1.5	0.011	5.67	5.2
-04	1.8	0.012	5.43	4.8
-05	2.2	0.013	5.22	4.3
-06	2.7	0.014	5.03	3.9
-07	3.3	0.016	4.70	3.5
-08	3.9	0.017	4.56	3.2
-09	4.7	0.022	4.01	2.9
-10	5.6	0.024	3.84	2.7
-11	6.8	0.026	3.69	2.5
-12	8.2	0.028	3.55	2.2
-13	10.0	0.033	3.27	2.0
-14	12.0	0.037	3.09	1.8
-15	15.0	0.040	2.97	1.6
-16	18.0	0.044	2.84	1.5
-17	22.0	0.050	2.66	1.4
-18	27.0	0.070	2.25	1.2
-19	33.0	0.075	2.17	1.1
-20	39.0	0.084	2.05	1.0
-21	47.0	0.104	1.84	0.93
-22	56.0	0.130	1.65	0.85
-23	68.0	0.145	1.56	0.77
-24	82.0	0.152	1.53	0.71
-25	100.0	0.208	1.30	0.64
-26	120.0	0.283	1.12	0.58
-27	150.0	0.330	1.04	0.52
-28	180.0	0.362	0.99	0.48
-29	220.0	0.505	0.84	0.43
-30	270.0	0.557	0.80	0.39
-31	330.0	0.650	0.74	0.35
-32	390.0	0.770	0.68	0.32
-33	470.0	1.03	0.59	0.29
-34	560.0	1.14	0.56	0.27
-35	680.0	1.50	0.49	0.25
-36	820.0	1.98	0.42	0.22
-37	1000.0	2.30	0.39	0.20
-38	1200.0	2.55	0.37	0.18
-39	1500.0	3.00	0.34	0.16
-40	1800.0	4.00	0.30	0.15
-41	2200.0	4.40	0.28	0.14
-42	2700.0	5.80	0.25	0.12
-43	3300.0	6.56	0.23	0.11
-44	3900.0	8.63	0.20	0.10
-45	4700.0	10.1	0.19	0.09
-46	5600.0	11.2	0.18	0.09
-47	6800.0	15.0	0.15	0.08
-48	8200.0	20.8	0.13	0.07
-49	10000.0	23.4	0.12	0.06
-50	12000.0	26.0	0.12	0.06
-51	15000.0	36.0	0.10	0.05
-52	18000.0	40.0	0.09	0.05

1/ Measured at 1 V with no dc current.
2/ The current at which the inductance will decrease by a maximum of 5 percent from its initial zero dc value.

DRAFT

TABLE II. Electrical characteristics (final).

Inspection group	Allowable percent variation from the initial measurement	
Qualification inspection:	Inductance	DC resistance
Group II	±5	±3 (+.001 ohm)
Group III	±5	±2 (+.001 ohm)
Group IV	±5	-----

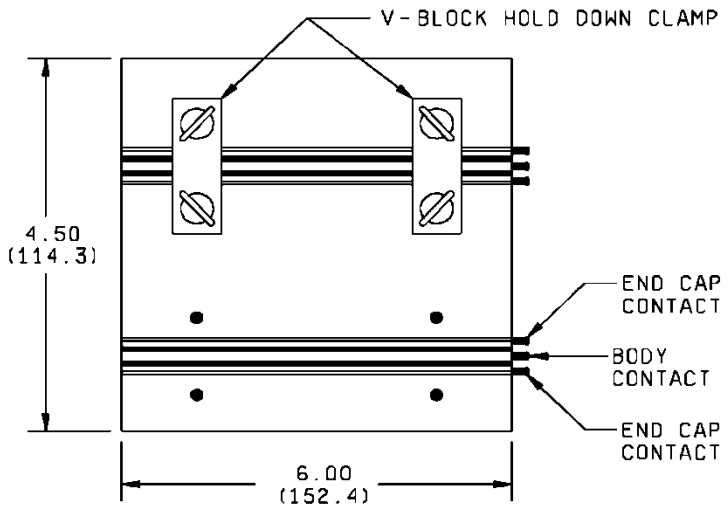

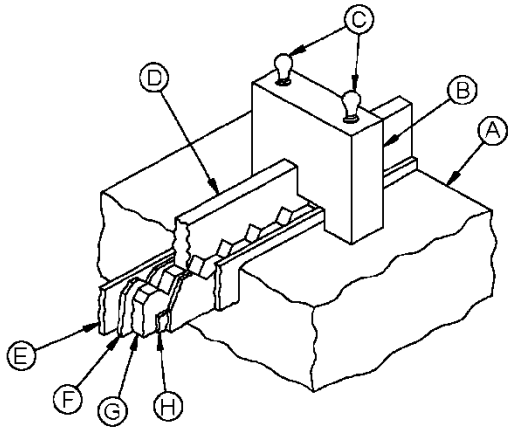

ENLARGED CUT-AWAY OF CLAMP

Legend	
Ltr	Description
A	G-10 base
B	Upper V-block hold-down clamp
C	Clamp screws
D	Upper V-block (body contact)
E	End cap contact retaining wall
F	End cap contact V-block (in contact with E)
G	Lower V-block (body contact)
H	G-10 insulators (separating G from F/E)

NOTES:
1. Dimensions are in inches.
2. Metric equivalents are given for general information only.
3. Metric equivalents are in parentheses.

FIGURE 2. Test fixture for insulation resistance, dielectric withstanding voltage and barometric pressure.

REQUIREMENTS:

Electrical ratings: See table I.

Electrical characteristics (final): See table II.

Dimensions and configuration: See figure 1.

Weight: 2.5 grams maximum.

Case: Grade 5, encapsulated.

Operating temperature range: -55°C to +130°C.

Temperature rise (at +85°C): +45°C, Method of mounting shall be on test substrates that provide test pieces one inch minimum separation.

Altitude: 70,000 feet.

Power: 0.50 watts, maximum power dissipation at 85°C.

Resistance to soldering heat: MIL-STD-202-210, test condition B. Depth of immersion shall be the entire mounting surface for 4 to 5 seconds.

Bond strength: MIL-STD-883, Method 2011, test condition F.

Force: 2 pounds.

Dielectric withstanding voltage: MIL-STD-202-301, test voltage 1000 V rms.

Barometric pressure: MIL-STD-202-105, test condition C, (70,000 feet), test voltage 500 V rms.

Insulation resistance: MIL-STD-202-302, 1,000 megohms minimum at 500 V dc.

Electrical characteristics (initial): See table I.

Vibration, high frequency: MIL-STD-202-204, test condition D.

Moisture resistance: MIL-STD-202-106, method of mounting shall be on test substrates that provide test pieces one inch minimum separation.

Test fixture: Test shall be performed using test fixture shown on figure 2, or equivalent.

Quality Assurance Provisions:

Extent of qualification: Qualification testing and approval to M27/367-61 shall be sufficient to grant qualification to: M27/367-01 through M27/367-61 inclusive and M27/368-01 through M27/368-31 inclusive and M27/370-01 through M27/370-52 inclusive, all parts.

Marking location: See figure 1.

Part or Identifying Number (PIN): M27/370-(dash number from table I).

Amendment notations. The margins of this specification are marked with vertical lines to indicate modifications generated by this amendment. This was done as a convenience only and the Government assumes no liability whatsoever for any inaccuracies in these notations. Bidders and contractors are cautioned to evaluate the requirements of this document based on the entire content irrespective of the marginal notations.

Referenced documents. In addition to MIL-PRF-27, this document references the following:

MIL-STD-202-105	MIL-STD-202-106	MIL-STD-202-204	MIL-STD-202-210
MIL-STD-202-301	MIL-STD-202-302	MIL-STD-883	

DRAFT

Custodians:
Army - CR
Navy - EC
Air Force - 85
DLA - CC

Preparing activity:
DLA - CC

(Project 5950-2018-032)

Review activities:
Army - MI
Navy - AS, OS
Air Force – 19, 99

NOTE: The activities listed above were interested in this document as of the date of this document. Since organizations and responsibilities can change, you should verify the currency of this information above using the ASSIST Online database at https://assist.dla.mil.

DRAFT