INCH-POUND

MIL-PRF-27/368B
AMENDMENT 1
INITIAL DRAFT
SUPERSEDING
MIL-PRF-27/368B
12 April 2013

NOTE: This draft dated 18 April 2018, prepared by DLA Land and Maritime has not been approved and is subject to modification.
DO NOT USE FOR ACQUISITION PURPOSES.

PERFORMANCE SPECIFICATION SHEET

INDUCTOR, POWER, SURFACE MOUNT

This specification is approved for use by all Departments and Agencies of the Department of Defense.

The requirements for acquiring the product described herein shall consist of this specification sheet and MIL-PRF-27.

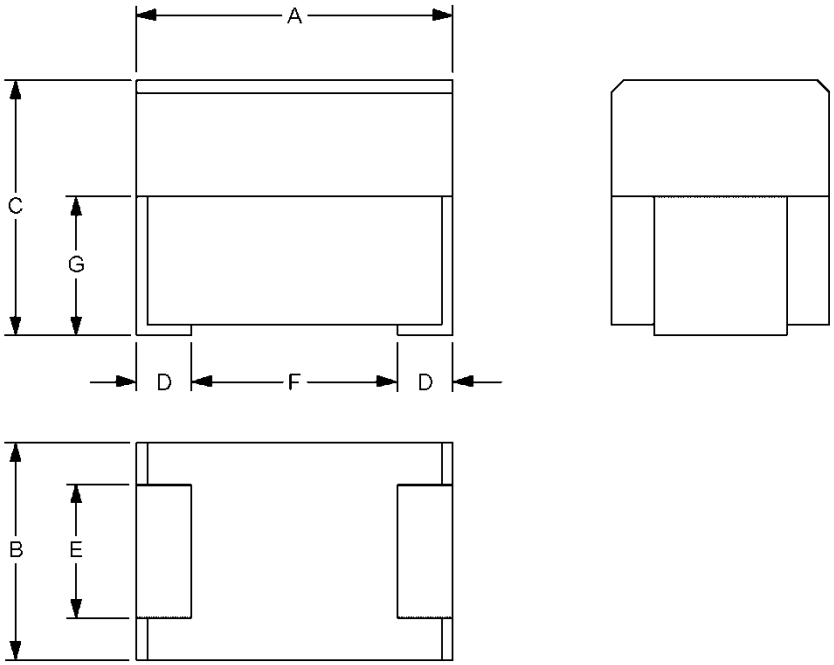

	Inches	mm
A	.166 to .190	4.22 to 4.83
B	.118 to .134	3.00 to 3.40
C	.118 to .138	3.00 to 3.51
D	.015 Min.	0.38 Min.
E	.054 to .078	1.37 to 1.98
F	.118 (Ref. Only)	3.00 (Ref. Only)
G	.066 (Ref. Only)	1.68 (Ref only)

NOTES:
1. Dimensions are in inches.
2. Metric equivalents are given for general information only.
3. Marking shall be on the top of the case.

FIGURE 1. Dimensions and configuration.

AMSC N/A

FSC 5950

TABLE I. Electrical characteristics (initial).

Dash number	Inductance (μH) ±10% 1/	DC resistance ohms (max)	Current rating (mA DC) (max)	Incremental current (mA DC) 2/
-01	1.0	0.113	1050	2400
-02	1.2	0.199	1000	2158
-03	1.5	0.222	950	1980
-04	1.8	0.240	900	1828
-05	2.2	0.268	850	1697
-06	2.7	0.288	800	1513
-07	3.3	0.323	750	1397
-08	3.9	0.347	700	1250
-09	4.7	0.401	650	1131
-10	5.6	0.437	650	1060
-11	6.8	0.472	600	990
-12	8.2	0.548	600	871
-13	10	0.608	550	772
-14	12	0.670	550	752
-15	15	0.780	450	693
-16	18	0.875	400	614
-17	22	1.200	370	515
-18	27	1.404	330	465
-19	33	1.578	300	425
-20	39	1.848	280	376
-21	47	2.064	260	366
-22	56	2.268	240	336
-23	68	3.408	220	297
-24	82	3.648	200	267
-25	100	4.320	180	238
-26	120	6.000	160	208
-27	150	6.432	140	183
-28	180	8.400	120	158
-29	220	9.680	120	143
-30	270	12.720	100	129
-31	330	15.240	90	118

1/ Measured at 1 V with no dc current at 1 KHz.
2/ The dc current at which the inductance will decrease by a maximum of 5 percent from the inductance at zero dc current.

TABLE II. Electrical characteristics (final).

Inspection group	Allowable percent variation from the initial measurement	
Qualification inspection:	Inductance	DC resistance
Group II	±5	±3 (+.001 ohm)
Group III	±5	±2 (+.001 ohm)
Group IV	±5	-----

DRAFT

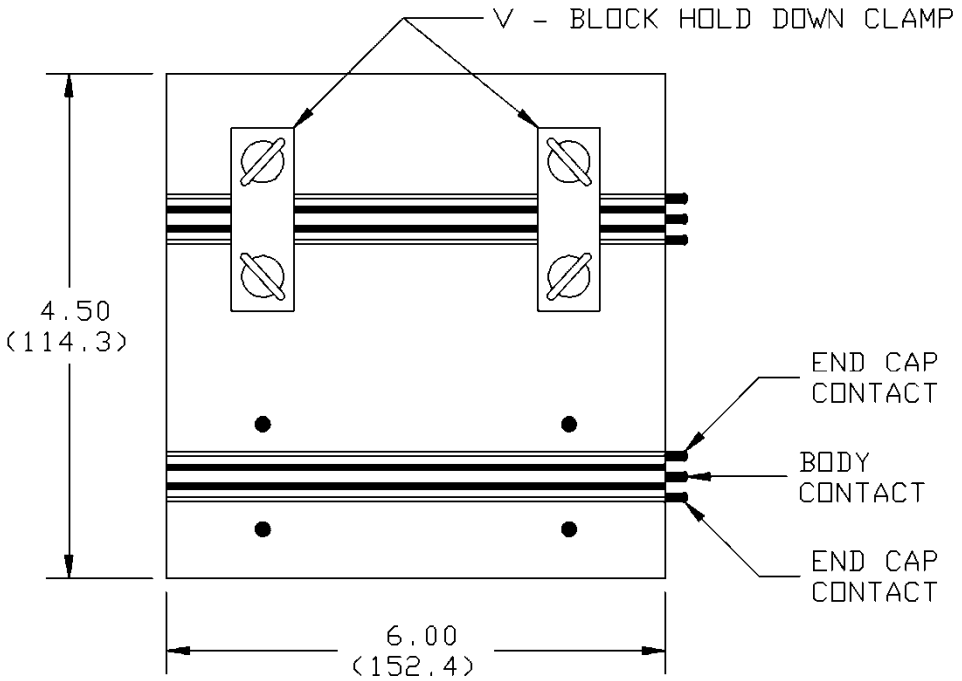

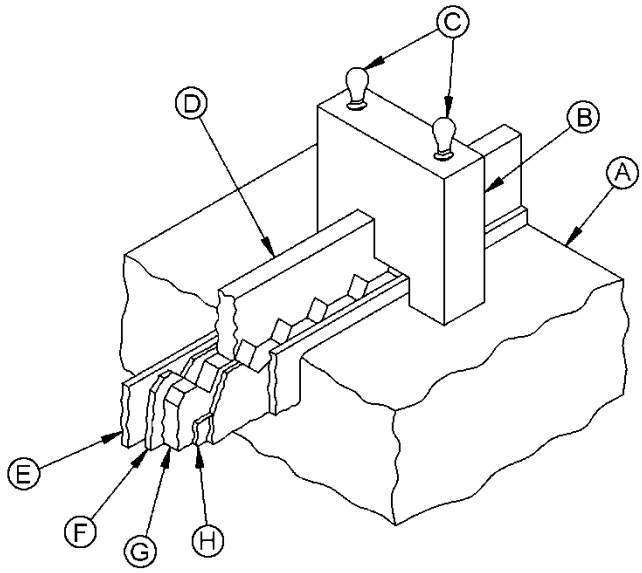

ENLARGED CUT-AWAY OF CLAMP

Legend	
LTR	Description
A	G-10 base
B	Upper V-block hold-down clamp
C	Clamp screws
D	Upper V-block (body contact)
E	End cap contact retaining wall
F	End cap contact V-block (in contact with E)
G	Lower V-block (body contact)
H	G-10 insulators (separating G from F/E)

NOTES:
1. Dimensions are in inches.
2. Metric equivalents are given for general information only.
3. Metric equivalents are in parentheses.

FIGURE 2. Test fixture for insulation resistance, dielectric withstanding voltage, and barometric pressure.

REQUIREMENTS:

Dimensions and configuration: See figure 1.

Weight: 1.5 grams maximum.

Case: Grade 5, encapsulated.

Operating temperature range: -55°C to +130°C, Class S.

Temperature rise (at +90°C): +40°C, method of mounting shall be on test substrates that provide test pieces one inch minimum separation.

Altitude: 70,000 feet.

Resistance to soldering heat: MIL-STD-202-210, test condition B. Depth of immersion shall be the entire mounting surface for 4 to 5 seconds.

Bond strength: MIL-STD-883, Method 2011, test condition F.

Force: 2 pounds.

Dielectric withstanding voltage: MIL-STD-202-301, test voltage 200 V rms.

Barometric pressure: MIL-STD-202-105, test condition C (70,000 feet), test voltage 80 V rms.

Insulation resistance: MIL-STD-202-302, 1000 megohms minimum at 100 V dc.

Electrical characteristics (initial): See table I.

Vibration, high frequency: MIL-STD-202-204, test condition D.

Moisture resistance: MIL-STD-202-106, method of mounting shall be on test substrates that provide test pieces one inch minimum separation.

Test fixture: Test shall be performed using text fixture shown on figure 2, or equivalent.

Quality Assurance Provisions:

Extent of qualification: Qualification testing and approval to M27/367-61 shall be sufficient to grant qualification to: M27/367-01 through M27/367-61 inclusive and M27/368-01 through M27/368-31 inclusive and M27/370-01 through M27/370-52 inclusive, all parts.

Marking location: See figure 1.

Part or Identifying Number (PIN): M27/368-(dash number from table I).

Amendment notations. The margins of this specification are marked with vertical lines to indicate modifications generated by this amendment. This was done as a convenience only and the Government assumes no liability whatsoever for any inaccuracies in these notations. Bidders and contractors are cautioned to evaluate the requirements of this document based on the entire content irrespective of the marginal notations.

Referenced documents. In addition to MIL-PRF-27, this document references the following:

MIL-STD-202-105	MIL-STD-202-106	MIL-STD-202-204	MIL-STD-202-210
MIL-STD-202-301	MIL-STD-202-302	MIL-STD-883	

DRAFT

Custodians:
Army - CR
Navy - EC
Air Force - 85
DLA - CC

Review activity:
Army – MI

Preparing activity:
DLA - CC

(Project 5950-2013-030)

NOTE: The activities listed above were interested in this document as of the date of this document. Since organizations and responsibilities can change, you should verify the currency of this information above using the ASSIST Online database at https://assist.dla.mil.

DRAFT