INCH-POUND
MIL-PRF-23269/1K
14 October 2022
SUPERSEDING
MIL-PRF-23269/1J
15 November 2016

PERFORMANCE SPECIFICATION SHEET

CAPACITOR, FIXED, GLASS DIELECTRIC, (AXIAL WIRE-LEAD TERMINALS), STYLE CYR10

Inactive for new design after November 15, 2016

This specification sheet is approved for use by all Departments and Agencies of the Department of Defense.

The requirements for acquiring the product described herein shall consist of this specification sheet and MIL-PRF-23269.

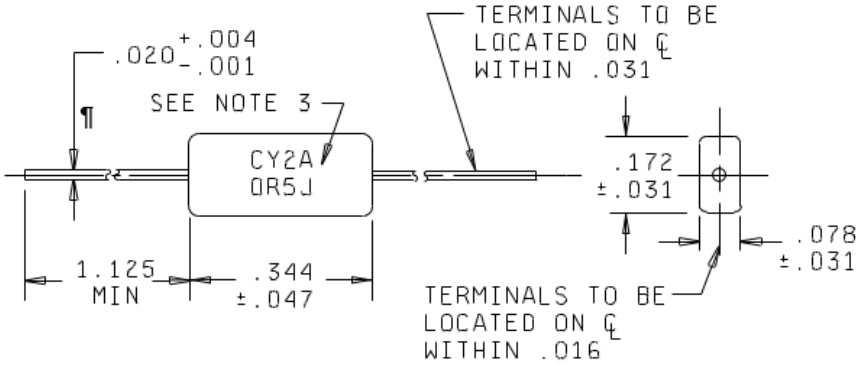

Inches	mm	Inches	mm
.001	0.03	.047	1.19
.004	0.10	.078	1.98
.016	0.41	.172	4.37
.020	0.51	.344	8.74
.031	0.79	1.125	28.58

NOTES:
1. Dimensions are in inches.
2. Metric equivalents are in millimeters and are given for general information only.
3. See marking requirement.

FIGURE 1. Dimensions and configurations.

DISTRIBUTION STATEMENT A. Approved for public release. Distribution is unlimited.

REQUIREMENTS:

Dimensions and configuration: See figure 1.

Case material: Glass.

Terminals: Solderable.

Capacitance (nominal): See table I.

Capacitance tolerance: See table I.

Rated voltage: See table I.

Rated temperature: -55°C to +125°C.

Temperature coefficient: 140 parts per million (ppm)/°C ± 25 ppm/°C.

Capacitance drift: 0.1 percent or 0.1 pF, whichever is greater.

Seal: Hermetic.

Seal: Test I of MIL-PRF-23269.

Insulation resistance: 10,000 megohms or 200-ohm-farads minimum (first article inspection only at +125°C). 100,000 megohms minimum (at +25°C).

Dissipation factor (DF): 0.1 percent maximum.

Thermal shock and moisture resistance:

DF: 0.1 percent maximum.

Quality factor (Q): In accordance with MIL-PRF-23269.

Life:

ΔCapacitance (240 hours and 1,000 hours): 0.5 percent or 0.5 pF maximum.

DF (240 hours and 1,000 hours): 0.15 percent maximum.

Marking:

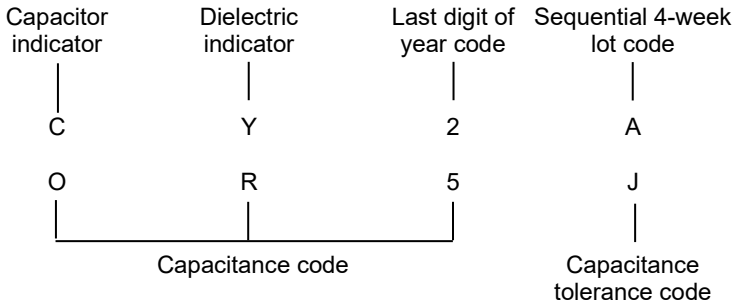

Capacitance tolerance code: C = ± 0.25 pF, D = ± 0.5 pF, F = ± 1 percent, G = ± 2 percent, J = ± 5 percent.

Substitutability data: See table II.

TABLE I. Electrical characteristics with dash numbers. 1/

Dash number M23269/01 -		Capacitance (pF)	Capacitance tolerance	Dash number M23269/01 -		Capacitance (pF)	Capacitance tolerance
500 V_{dc}	100 V_{dc}			500 V_{dc}	100 V_{dc}		
1001	8001	0.5	±0.25 pF	1048	8048	24	±5%
1002	8002	1.0	±0.25 pF	1049	8049	27	±1%
1003	8003	1.5	±0.25 pF	1050	8050	27	±2%
1004	8004	2.2	±0.25 pF	1051	8051	27	±5%
1005	8005	2.2	±0.50 pF	1052	8052	30	±1%
1006	8006	2.7	±0.25 pF	1053	8053	30	±2%
1007	8007	3.0	±0.25 pF	1054	8054	30	±5%
1008	8008	3.0	±0.50 pF	1055	8055	33	±1%
1009	8009	3.3	±0.25 pF	1056	8056	33	±2%
1010	8010	3.6	±0.25 pF	1057	8057	33	±5%
1011	8011	3.6	±0.50 pF	1058	8058	36	±1%
1012	8012	3.9	±0.25 pF	1059	8059	36	±2%
1013	8013	4.3	±0.25 pF	1060	8060	36	±5%
1014	8014	4.3	±0.50 pF	1061	8061	39	±1%
1015	8015	4.7	±0.25 pF	1062	8062	39	±2%
1016	8016	5.1	±0.25 pF	1063	8063	39	±5%
1017	8017	5.6	±0.25 pF	1064	8064	43	±1%
1018	8018	5.6	±5%	1065	8065	43	±2%
1019	8019	6.2	±0.25 pF	1066	8066	43	±5%
1020	8020	6.2	±5%	1067	8067	47	±1%
1021	8021	6.8	±0.25 pF	1068	8068	47	±2%
1022	8022	6.8	±5%	1069	8069	47	±5%
1023	8023	7.5	±0.25 pF	1070	8070	51	±1%
1024	8024	7.5	±5%	1071	8071	51	±2%
1025	8025	8.2	±0.25 pF	1072	8072	51	±5%
1026	8026	8.2	±5%	1073	8073	56	±1%
1027	8027	9.1	±0.25 pF	1074	8074	56	±2%
1028	8028	9.1	±5%	1075	8075	56	±5%
1029	8029	10	±0.25 pF	1076	8076	62	±1%
1030	8030	10	±5%	1077	8077	62	±2%
1031	8031	11	±0.25 pF	1078	8078	62	±5%
1032	8032	11	±5%	1079	8079	68	±1%
1033	8033	12	±0.25 pF	1080	8080	68	±2%
1034	8034	12	±5%	1081	8081	68	±5%
1035	8035	13	±2%	1082	8082	75	±1%
1036	8036	13	±5%	1083	8083	75	±2%
1037	8037	15	±2%	1084	8084	75	±5%
1038	8038	15	±5%	1085	8085	82	±1%
1039	8039	16	±2%	1086	8086	82	±2%
1040	8040	16	±5%	1087	8087	82	±5%
1041	8041	18	±2%	1088	8088	91	±1%
1042	8042	18	±5%	1089	8089	91	±2%
1043	8043	20	±2%	1090	8090	91	±5%
1044	8044	20	±5%	1091	8091	100	±1%
1045	8045	22	±2%	1092	8092	100	±2%
1046	8046	22	±5%	1093	8093	100	±5%
1047	8047	24	±2%	1094	8094	110	±1%

See footnote at end of table.

TABLE I. Electrical characteristics with dash numbers. – Continued. 1/

Dash number M23269/01 -		Capacitance (pF)	Capacitance tolerance	Dash number M23269/01 -		Capacitance (pF)	Capacitance tolerance
500 V_{dc}	100 V_{dc}			500 V_{dc}	100 V_{dc}		
1095	8095	110	±2%	1112	8112	200	±1%
1096	8096	110	±5%	1113	8113	200	±2%
1097	8097	120	±1%	1114	8114	200	±5%
1098	8098	120	±2%	300 V_{dc}	100 V_{dc}		
1099	8099	120	±5%	1115	8115	220	±1%
1100	8100	130	±1%	1116	8116	220	±2%
1101	8101	130	±2%	1117	8117	220	±5%
1102	8102	130	±5%	1118	8118	240	±1%
1103	8103	150	±1%	1119	8119	240	±2%
1104	8104	150	±2%	1120	8120	240	±5%
1105	8105	150	±5%	1121	8121	270	±1%
1106	8106	160	±1%	1122	8122	270	±2%
1107	8107	160	±2%	1123	8123	270	±5%
1108	8108	160	±5%	1124	8124	300	±1%
1109	8109	180	±1%	1125	8125	300	±2%
1110	8110	180	±2%	1126	8126	300	±5%
1111	8111	180	±5%				

1/ Dash numbers are non-established reliability.

TABLE II. Substitutability data. 1/

Superseding dash number M23269/01-	Superseded type designation in MIL-C-23269/1B	Superseded dash number in MIL-PRF 23269/1C through /1H M23269/01- (FRL in percent/1,000 hours)					
		500 V_{dc}					100 V_{dc}
		L (2.0)	M (1.0)	P (0.1)	R (0.01)	S (0.001)	S (0.001) 2/
1001	CYR10C0R5C	2001	3001	4001	5001	6001	- - -
1002	CYR10C1R0C	2002	3002	4002	5002	6002	- - -
1003	CYR10C1R5C	2003	3003	4003	5003	6003	- - -
1004	CYR10C2R2C	2004	3004	4004	5004	6004	- - -
1005	CYR10C2R2D	2005	3005	4005	5005	6005	- - -
1006	CYR10C2R7C	2006	3006	4006	5006	6006	- - -
1007	CYR10C3R0C	2007	3007	4007	5007	6007	- - -
1008	CYR10C3R0D	2008	3008	4008	5008	6008	- - -
1009	CYR10C3R3C	2009	3009	4009	5009	6009	- - -
1010	CYR10C3R6C	2010	3010	4010	5010	6010	- - -
1011	CYR10C3R6D	2011	3011	4011	5011	6011	- - -
1012	CYR10C3R9C	2012	3012	4012	5012	6012	- - -
1013	CYR10C4R3C	2013	3013	4013	5013	6013	- - -
1014	CYR10C4R3D	2014	3014	4014	5014	6014	- - -
1015	CYR10C4R7C	2015	3015	4015	5015	6015	- - -
1016	CYR10C5R1C	2016	3016	4016	5016	6016	- - -
1017	CYR10C5R6C	2017	3017	4017	5017	6017	- - -
1018	CYR10C5R6J	2018	3018	4018	5018	6018	- - -
1019	CYR10C6R2C	2019	3019	4019	5019	6019	- - -
1020	CYR10C6R2J	2020	3020	4020	5020	6020	- - -
1021	CYR10C6R8C	2021	3021	4021	5021	6021	- - -
1022	CYR10C6R8J	2022	3022	4022	5022	6022	- - -
1023	CYR10C7R5C	2023	3023	4023	5023	6023	- - -
1024	CYR10C7R5J	2024	3024	4024	5024	6024	- - -

See footnotes at end of table.

TABLE II. Substitutability data - Continued. 1/

Superseding dash number M23269/01-	Superseded type designation in MIL-C-23269/1B	Superseded dash number in MIL-PRF 23269/1C through /1H M23269/01- (FRL in percent/1,000 hours)					
		500 V_{dc}					100 V_{dc}
		L (2.0)	M (1.0)	P (0.1)	R (0.01)	S (0.001)	S (0.001) 2/
1025	CYR10C8R2C	2025	3025	4025	5025	6025	- - -
1026	CYR10C8R2J	2026	3026	4026	5026	6026	- - -
1027	CYR10C9R1C	2027	3027	4027	5027	6027	- - -
1028	CYR10C9R1J	2028	3028	4028	5028	6028	- - -
1029	CYR10C100C	2029	3029	4029	5029	6029	- - -
1030	CYR10C100J	2030	3030	4030	5030	6030	- - -
1031	CYR10C110C	2031	3031	4031	5031	6031	- - -
1032	CYR10C110J	2032	3032	4032	5032	6032	- - -
1033	CYR10C120C	2033	3033	4033	5033	6033	- - -
1034	CYR10C120J	2034	3034	4034	5034	6034	- - -
1035	CYR10C130G	2035	3035	4035	5035	6035	- - -
1036	CYR10C130J	2036	3036	4036	5036	6036	- - -
1037	CYR10C150G	2037	3037	4037	5037	6037	- - -
1038	CYR10C150J	2038	3038	4038	5038	6038	- - -
1039	CYR10C160G	2039	3039	4039	5039	6039	- - -
1040	CYR10C160J	2040	3040	4040	5040	6040	- - -
1041	CYR10C180G	2041	3041	4041	5041	6041	- - -
1042	CYR10C180J	2042	3042	4042	5042	6042	- - -
1043	CYR10C200G	2043	3043	4043	5043	6043	- - -
1044	CYR10C200J	2044	3044	4044	5044	6044	- - -
1045	CYR10C220G	2045	3045	4045	5045	6045	- - -
1046	CYR10C220J	2046	3046	4046	5046	6046	- - -
1047	CYR10C240G	2047	3047	4047	5047	6047	- - -
1048	CYR10C240J	2048	3048	4048	5048	6048	- - -
1049	CYR10C270F	2049	3049	4049	5049	6049	- - -
1050	CYR10C270G	2050	3050	4050	5050	6050	- - -
1051	CYR10C270J	2051	3051	4051	5051	6051	- - -
1052	CYR10C300F	2052	3052	4052	5052	6052	- - -
1053	CYR10C300G	2053	3053	4053	5053	6053	- - -
1054	CYR10C300J	2054	3054	4054	5054	6054	- - -
1055	CYR10C330F	2055	3055	4055	5055	6055	- - -
1056	CYR10C330G	2056	3056	4056	5056	6056	- - -
1057	CYR10C330J	2057	3057	4057	5057	6057	- - -
1058	CYR10C360F	2058	3058	4058	5058	6058	- - -
1059	CYR10C360G	2059	3059	4059	5059	6059	- - -
1060	CYR10C360J	2060	3060	4060	5060	6060	- - -
1061	CYR10C390F	2061	3061	4061	5061	6061	- - -
1062	CYR10C390G	2062	3062	4062	5062	6062	- - -
1063	CYR10C390J	2063	3063	4063	5063	6063	- - -
1064	CYR10C430F	2064	3064	4064	5064	6064	- - -
1065	CYR10C430G	2065	3065	4065	5065	6065	- - -
1066	CYR10C430J	2066	3066	4066	5066	6066	- - -
1067	CYR10C470F	2067	3067	4067	5067	6067	- - -
1068	CYR10C470G	2068	3068	4068	5068	6068	- - -
1069	CYR10C470J	2069	3069	4069	5069	6069	- - -
1070	CYR10C510F	2070	3070	4070	5070	6070	- - -
1071	CYR10C510G	2071	3071	4071	5071	6071	- - -
1072	CYR10C510J	2072	3072	4072	5072	6072	- - -
1073	CYR10C560F	2073	3073	4073	5073	6073	- - -

See footnotes at end of table.

TABLE II. Substitutability data - Continued. 1/

Superseding dash number M23269/01-	Superseded type designation in MIL-C-23269/1B	Superseded dash number in MIL-PRF 23269/1C through /1H M23269/01- (FRL in percent/1,000 hours)					
		500 V_{dc}					100 V_{dc}
		L (2.0)	M (1.0)	P (0.1)	R (0.01)	S (0.001)	S (0.001) 2/
1074	CYR10C560G	2074	3074	4074	5074	6074	- - -
1075	CYR10C560J	2075	3075	4075	5075	6075	- - -
1076	CYR10C620F	2076	3076	4076	5076	6076	- - -
1077	CYR10C620G	2077	3077	4077	5077	6077	- - -
1078	CYR10C620J	2078	3078	4078	5078	6078	- - -
1079	CYR10C680F	2079	3079	4079	5079	6079	- - -
1080	CYR10C680G	2080	3080	4080	5080	6080	- - -
1081	CYR10C680J	2081	3081	4081	5081	6081	- - -
1082	CYR10C750F	2082	3082	4082	5082	6082	- - -
1083	CYR10C750G	2083	3083	4083	5083	6083	- - -
1084	CYR10C750J	2084	3084	4084	5084	6084	- - -
1085	CYR10C820F	2085	3085	4085	5085	6085	- - -
1086	CYR10C820G	2086	3086	4086	5086	6086	- - -
1087	CYR10C820J	2087	3087	4087	5087	6087	- - -
1088	CYR10C910F	2088	3088	4088	5088	6088	- - -
1089	CYR10C910G	2089	3089	4089	5089	6089	- - -
1090	CYR10C910J	2090	3090	4090	5090	6090	- - -
1091	CYR10C101F	2091	3091	4091	5091	6091	- - -
1092	CYR10C101G	2092	3092	4092	5092	6092	- - -
1093	CYR10C101J	2093	3093	4093	5093	6093	- - -
1094	CYR10C111F	2094	3094	4094	5094	6094	- - -
1095	CYR10C111G	2095	3095	4095	5095	6095	- - -
1096	CYR10C111J	2096	3096	4096	5096	6096	- - -
1097	CYR10C121F	2097	3097	4097	5097	6097	- - -
1098	CYR10C121G	2098	3098	4098	5098	6098	- - -
1099	CYR10C121J	2099	3099	4099	5099	6099	- - -
1100	CYR10C131F	2100	3100	4100	5100	6100	- - -
1101	CYR10C131G	2101	3101	4101	5101	6101	- - -
1102	CYR10C131J	2102	3102	4102	5102	6102	- - -
1103	CYR10C151F	2103	3103	4103	5103	6103	- - -
1104	CYR10C151G	2104	3104	4104	5104	6104	- - -
1105	CYR10C151J	2105	3105	4105	5105	6105	- - -
1106	CYR10C161F	2106	3106	4106	5106	6106	- - -
1107	CYR10C161G	2107	3107	4107	5107	6107	- - -
1108	CYR10C161J	2108	3108	4108	5108	6108	- - -
1109	CYR10C181F	2109	3109	4109	5109	6109	- - -
1110	CYR10C181G	2110	3110	4110	5110	6110	- - -
1111	CYR10C181J	2111	3111	4111	5111	6111	- - -
1112	CYR10C201F	2112	3112	4112	5112	6112	- - -
1113	CYR10C201G	2113	3113	4113	5113	6113	- - -
1114	CYR10C201J	2114	3114	4114	5114	6114	- - -
		300 V_{dc}					100 V_{dc}
1115	CYR10C221F	2115	3115	4115	5115	6115	- - -
1116	CYR10C221G	2116	3116	4116	5116	6116	- - -
1117	CYR10C221J	2117	3117	4117	5117	6117	- - -
1118	CYR10C241F	2118	3118	4118	5118	6118	- - -
1119	CYR10C241G	2119	3119	4119	5119	6119	- - -
1120	CYR10C241J	2120	3120	4120	5120	6120	- - -
1121	CYR10C271F	2121	3121	4121	5121	6121	- - -

See footnotes at end of table.

TABLE II. Substitutability data - Continued. 1/

Superseding dash number M23269/01-	Superseded type designation in MIL-C-23269/1B	Superseded dash number in MIL-PRF 23269/1C through /1H M23269/01- (FRL in percent/1,000 hours)					
		300 V_{dc}					100 V_{dc}
		L (2.0)	M (1.0)	P (0.1)	R (0.01)	S (0.001)	S (0.001) 2/
1122	CYR10C271G	2122	3122	4122	5122	6122	- - -
1123	CYR10C271J	2123	3123	4123	5123	6123	- - -
1124	CYR10C301F	2124	3124	4124	5124	6124	- - -
1125	CYR10C301G	2125	3125	4125	5125	6125	- - -
1126	CYR10C301J	2126	3126	4126	5126	6126	- - -
8001	- - -	- - -	- - -	- - -	- - -	- - -	7001
8002	- - -	- - -	- - -	- - -	- - -	- - -	7002
8003	- - -	- - -	- - -	- - -	- - -	- - -	7003
8004	- - -	- - -	- - -	- - -	- - -	- - -	7004
8005	- - -	- - -	- - -	- - -	- - -	- - -	7005
8006	- - -	- - -	- - -	- - -	- - -	- - -	7006
8007	- - -	- - -	- - -	- - -	- - -	- - -	7007
8008	- - -	- - -	- - -	- - -	- - -	- - -	7008
8009	- - -	- - -	- - -	- - -	- - -	- - -	7009
8010	- - -	- - -	- - -	- - -	- - -	- - -	7010
8011	- - -	- - -	- - -	- - -	- - -	- - -	7011
8012	- - -	- - -	- - -	- - -	- - -	- - -	7012
8013	- - -	- - -	- - -	- - -	- - -	- - -	7013
8014	- - -	- - -	- - -	- - -	- - -	- - -	7014
8015	- - -	- - -	- - -	- - -	- - -	- - -	7015
8016	- - -	- - -	- - -	- - -	- - -	- - -	7016
8017	- - -	- - -	- - -	- - -	- - -	- - -	7017
8018	- - -	- - -	- - -	- - -	- - -	- - -	7018
8019	- - -	- - -	- - -	- - -	- - -	- - -	7019
8020	- - -	- - -	- - -	- - -	- - -	- - -	7020
8021	- - -	- - -	- - -	- - -	- - -	- - -	7021
8022	- - -	- - -	- - -	- - -	- - -	- - -	7022
8023	- - -	- - -	- - -	- - -	- - -	- - -	7023
8024	- - -	- - -	- - -	- - -	- - -	- - -	7024
8025	- - -	- - -	- - -	- - -	- - -	- - -	7025
8026	- - -	- - -	- - -	- - -	- - -	- - -	7026
8027	- - -	- - -	- - -	- - -	- - -	- - -	7027
8028	- - -	- - -	- - -	- - -	- - -	- - -	7028
8029	- - -	- - -	- - -	- - -	- - -	- - -	7029
8030	- - -	- - -	- - -	- - -	- - -	- - -	7030
8031	- - -	- - -	- - -	- - -	- - -	- - -	7031
8032	- - -	- - -	- - -	- - -	- - -	- - -	7032
8033	- - -	- - -	- - -	- - -	- - -	- - -	7033
8034	- - -	- - -	- - -	- - -	- - -	- - -	7034
8035	- - -	- - -	- - -	- - -	- - -	- - -	7035
8036	- - -	- - -	- - -	- - -	- - -	- - -	7036
8037	- - -	- - -	- - -	- - -	- - -	- - -	7037
8038	- - -	- - -	- - -	- - -	- - -	- - -	7038
8039	- - -	- - -	- - -	- - -	- - -	- - -	7039
8040	- - -	- - -	- - -	- - -	- - -	- - -	7040
8041	- - -	- - -	- - -	- - -	- - -	- - -	7041
8042	- - -	- - -	- - -	- - -	- - -	- - -	7042
8043	- - -	- - -	- - -	- - -	- - -	- - -	7043
8044	- - -	- - -	- - -	- - -	- - -	- - -	7044

See footnotes at end of table.

TABLE II. Substitutability data - Continued. 1/

Superseding dash number M23269/01-	Superseded type designation in MIL-C-23269/1B	Superseded dash number in MIL-PRF 23269/1C through /1H M23269/01- (FRL in percent/1,000 hours)					
		300 V_{dc}					100 V_{dc}
		L (2.0)	M (1.0)	P (0.1)	R (0.01)	S (0.001)	S (0.001) 2/
8045	- - -	- - -	- - -	- - -	- - -	- - -	7045
8046	- - -	- - -	- - -	- - -	- - -	- - -	7046
8047	- - -	- - -	- - -	- - -	- - -	- - -	7047
8048	- - -	- - -	- - -	- - -	- - -	- - -	7048
8049	- - -	- - -	- - -	- - -	- - -	- - -	7049
8050	- - -	- - -	- - -	- - -	- - -	- - -	7050
8051	- - -	- - -	- - -	- - -	- - -	- - -	7051
8052	- - -	- - -	- - -	- - -	- - -	- - -	7052
8053	- - -	- - -	- - -	- - -	- - -	- - -	7053
8054	- - -	- - -	- - -	- - -	- - -	- - -	7054
8055	- - -	- - -	- - -	- - -	- - -	- - -	7055
8056	- - -	- - -	- - -	- - -	- - -	- - -	7056
8057	- - -	- - -	- - -	- - -	- - -	- - -	7057
8058	- - -	- - -	- - -	- - -	- - -	- - -	7058
8059	- - -	- - -	- - -	- - -	- - -	- - -	7059
8060	- - -	- - -	- - -	- - -	- - -	- - -	7060
8061	- - -	- - -	- - -	- - -	- - -	- - -	7061
8062	- - -	- - -	- - -	- - -	- - -	- - -	7062
8063	- - -	- - -	- - -	- - -	- - -	- - -	7063
8064	- - -	- - -	- - -	- - -	- - -	- - -	7064
8065	- - -	- - -	- - -	- - -	- - -	- - -	7065
8066	- - -	- - -	- - -	- - -	- - -	- - -	7066
8067	- - -	- - -	- - -	- - -	- - -	- - -	7067
8068	- - -	- - -	- - -	- - -	- - -	- - -	7068
8069	- - -	- - -	- - -	- - -	- - -	- - -	7069
8070	- - -	- - -	- - -	- - -	- - -	- - -	7070
8071	- - -	- - -	- - -	- - -	- - -	- - -	7071
8072	- - -	- - -	- - -	- - -	- - -	- - -	7072
8073	- - -	- - -	- - -	- - -	- - -	- - -	7073
8074	- - -	- - -	- - -	- - -	- - -	- - -	7074
8075	- - -	- - -	- - -	- - -	- - -	- - -	7075
8076	- - -	- - -	- - -	- - -	- - -	- - -	7076
8077	- - -	- - -	- - -	- - -	- - -	- - -	7077
8078	- - -	- - -	- - -	- - -	- - -	- - -	7078
8079	- - -	- - -	- - -	- - -	- - -	- - -	7079
8080	- - -	- - -	- - -	- - -	- - -	- - -	7080
8081	- - -	- - -	- - -	- - -	- - -	- - -	7081
8082	- - -	- - -	- - -	- - -	- - -	- - -	7082
8083	- - -	- - -	- - -	- - -	- - -	- - -	7083
8084	- - -	- - -	- - -	- - -	- - -	- - -	7084
8085	- - -	- - -	- - -	- - -	- - -	- - -	7085
8086	- - -	- - -	- - -	- - -	- - -	- - -	7086
8087	- - -	- - -	- - -	- - -	- - -	- - -	7087
8088	- - -	- - -	- - -	- - -	- - -	- - -	7088
8089	- - -	- - -	- - -	- - -	- - -	- - -	7089
8090	- - -	- - -	- - -	- - -	- - -	- - -	7090
8091	- - -	- - -	- - -	- - -	- - -	- - -	7091
8092	- - -	- - -	- - -	- - -	- - -	- - -	7092
8093	- - -	- - -	- - -	- - -	- - -	- - -	7093

See footnotes at end of table.

TABLE II. Substitutability data - Continued. 1/

Superseding dash number M23269/01-	Superseded type designation in MIL-C-23269/1B	Superseded dash number in MIL-PRF 23269/1C through /1H M23269/01- (FRL in percent/1,000 hours)					
		300 V_{dc}					100 V_{dc}
		L (2.0)	M (1.0)	P (0.1)	R (0.01)	S (0.001)	S (0.001) 2/
8094	- - -	- - -	- - -	- - -	- - -	- - -	7094
8095	- - -	- - -	- - -	- - -	- - -	- - -	7095
8096	- - -	- - -	- - -	- - -	- - -	- - -	7096
8097	- - -	- - -	- - -	- - -	- - -	- - -	7097
8098	- - -	- - -	- - -	- - -	- - -	- - -	7098
8099	- - -	- - -	- - -	- - -	- - -	- - -	7099
8100	- - -	- - -	- - -	- - -	- - -	- - -	7100
8101	- - -	- - -	- - -	- - -	- - -	- - -	7101
8102	- - -	- - -	- - -	- - -	- - -	- - -	7102
8103	- - -	- - -	- - -	- - -	- - -	- - -	7103
8104	- - -	- - -	- - -	- - -	- - -	- - -	7104
8105	- - -	- - -	- - -	- - -	- - -	- - -	7105
8106	- - -	- - -	- - -	- - -	- - -	- - -	7106
8107	- - -	- - -	- - -	- - -	- - -	- - -	7107
8108	- - -	- - -	- - -	- - -	- - -	- - -	7108
8109	- - -	- - -	- - -	- - -	- - -	- - -	7109
8110	- - -	- - -	- - -	- - -	- - -	- - -	7110
8111	- - -	- - -	- - -	- - -	- - -	- - -	7111
8112	- - -	- - -	- - -	- - -	- - -	- - -	7112
8113	- - -	- - -	- - -	- - -	- - -	- - -	7113
8114	- - -	- - -	- - -	- - -	- - -	- - -	7114
8115	- - -	- - -	- - -	- - -	- - -	- - -	7115
8116	- - -	- - -	- - -	- - -	- - -	- - -	7116
8117	- - -	- - -	- - -	- - -	- - -	- - -	7117
8118	- - -	- - -	- - -	- - -	- - -	- - -	7118
8119	- - -	- - -	- - -	- - -	- - -	- - -	7119
8120	- - -	- - -	- - -	- - -	- - -	- - -	7120
8121	- - -	- - -	- - -	- - -	- - -	- - -	7121
8122	- - -	- - -	- - -	- - -	- - -	- - -	7122
8123	- - -	- - -	- - -	- - -	- - -	- - -	7123
8124	- - -	- - -	- - -	- - -	- - -	- - -	7124
8125	- - -	- - -	- - -	- - -	- - -	- - -	7125
8126	- - -	- - -	- - -	- - -	- - -	- - -	7126

1/ Superseding dash numbers are non-ER. Users are cautioned to evaluate this document for their particular application before citing the superseding dash numbers since the L, M, P, R, S failure rate levels (FRL) established in accordance with MIL-STD-690 are no longer available.

2/ Sixth power rule applies for derating at $0.5\frac{operating}{rated}$ voltage ratios and below.

Referenced documents: In addition to MIL-PRF-23269, this specification sheet references MIL-STD-690.

Changes from previous issue. The margins of this specification are marked with vertical lines to indicate where changes from the previous issue were made. This was done as a convenience only and the Government assumes no liability whatsoever for any inaccuracies in these notations. Bidders and contractors are cautioned to evaluate the requirements of this document based on the entire content irrespective of the marginal notations and relationship to the last previous issue.

Custodians:
Army - CR
Navy - EC
Air Force - 85
DLA - CC

Review activities:
Navy - AS, MC, OS, SH
Air Force - 19
Other DoD - MDA

Preparing activity:
DLA - CC

(Project 5910-2022-027)

NOTE: The activities listed above were interested in this document as of the date of this document. Since organizations and responsibilities can change, you should verify the currency of the information above using the ASSIST Online database at https://assist.dla.mil/.