INCH POUND
MIL-PRF-22885/113C
20 August 2024
SUPERSEDING
MIL-PRF-22885/113B
15 July 2020

PERFORMANCE SPECIFICATION SHEET

SWITCHES, PUSHBUTTON, ILLUMINATED, 1.17 BY .96, LIGHT EMITTING DIODE (LED), SUNLIGHT READABLE, VOLTAGE DIMMABLE, NIGHT VISION GOGGLE COMPATIBLE, EMC COMPLIANT, COMMON TERMINATION SYSTEM (CTS), SPDT, DPDT, 4PDT, LOGIC LEVEL TO 7.5 AMPERES, OPTIONAL ELECTRONIC COMPONENT, DRIPPROOF, WATERTIGHT, SPLASHPROOF

This specification sheet is approved for use by all Departments and Agencies of the Department of Defense.

The requirements for acquiring the product described herein shall consist of this specification sheet and MIL-PRF-22885.

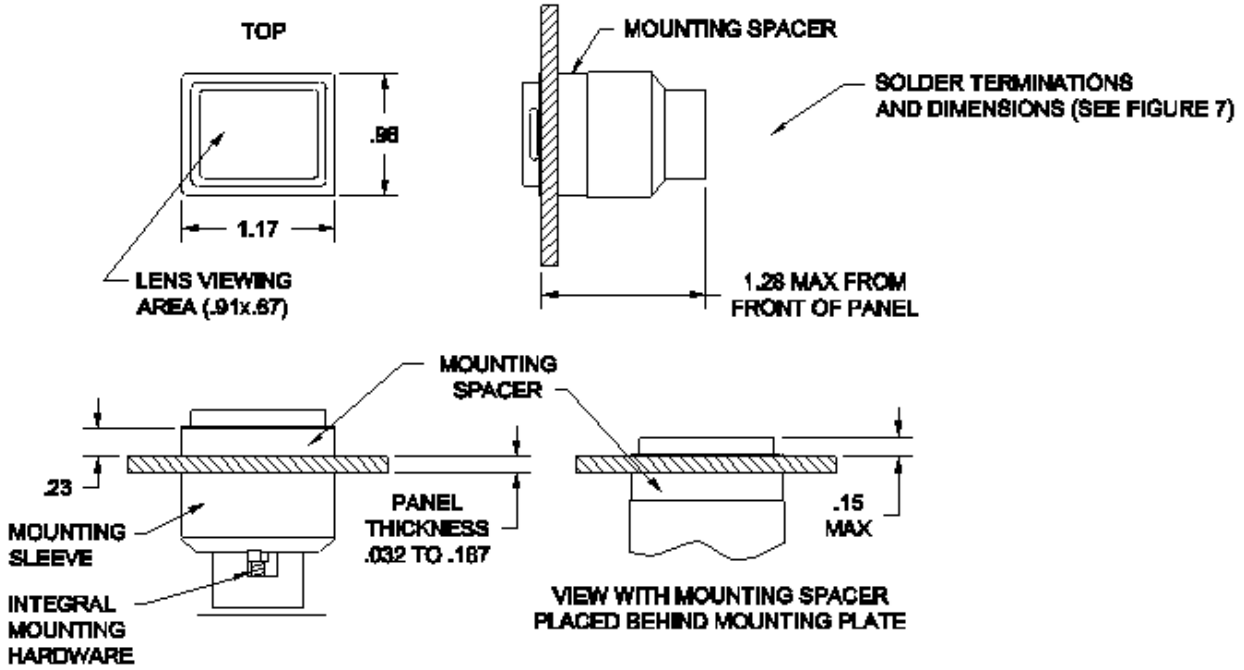

NOTES:

1. Dimensions are in inches.
2. Unless otherwise specified, tolerances are ±.010 for three place decimals and ±.03 for two place decimals.
3. The switch shall accommodate mounting to panels from .032 to .187 thick.
4. A mounting spacer is supplied with each switch unit for MIL-DTL-7788 panel requirements and places the mounting flange flush with the top of a .235 thick edge lighted panel when used in front of the panel. Otherwise, the spacer is used behind the panel.
5. Pushbutton cap shall be designed to prevent incorrect insertion into switch housing.
6. Pushbutton cap shall be held captive to switch body by retaining element to prevent accidental interchange.
7. Exact shape of switch is optional provided dimensions specified are not exceeded.
8. Terminals and basic switch identification shall be permanently marked as shown on figure 12.

FIGURE 1. Switch - type I, 2 pole (enclosure design 1, unsealed with solder terminals).

AMSC N/A
FSC 5930
DISTRIBUTION STATEMENT A. Approved for public release. Distribution is unlimited.

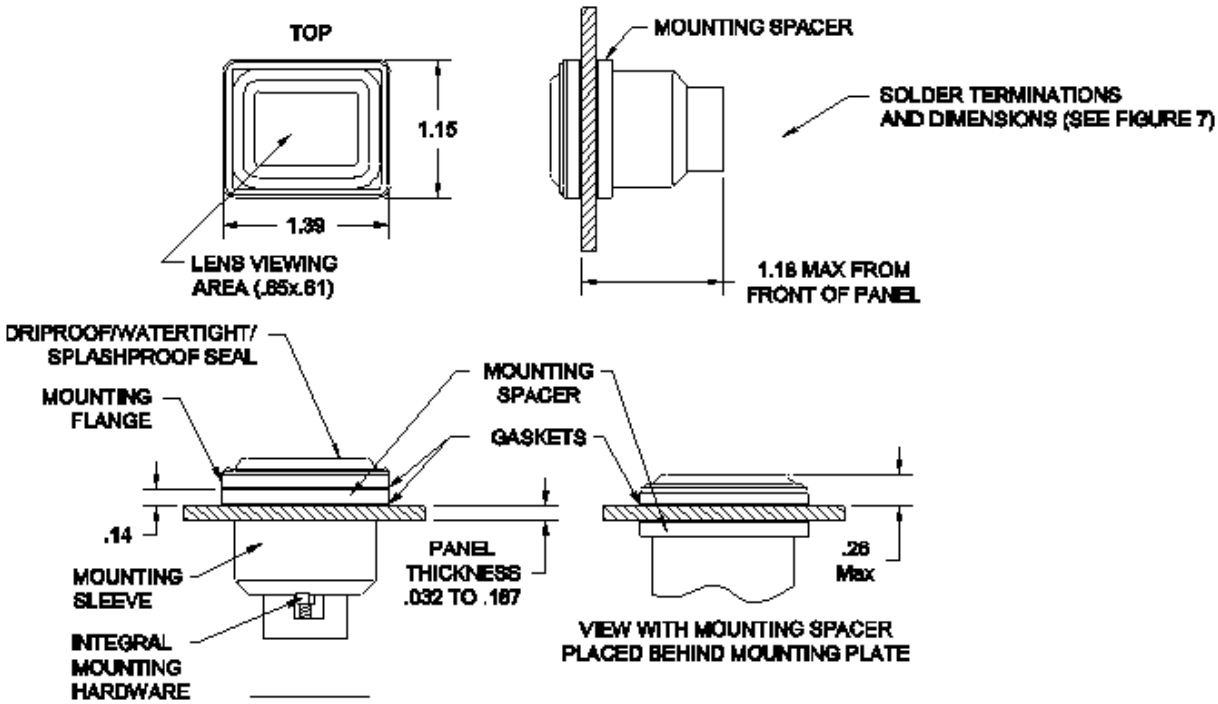

NOTES:

1. Dimensions are in inches.
2. Unless otherwise specified, tolerances are ±.010 for three place decimals and ±.03 for two place decimals.
3. The switch shall accommodate mounting to panels from .032 to .187 thick.
4. A mounting spacer is supplied with each switch unit for MIL-DTL-7788 panel requirements and places the mounting flange flush with the top of a .235 thick edge lighted panel when used in front of the panel. Otherwise, the spacer is used behind the panel.
5. Pushbutton cap shall be designed to prevent incorrect insertion into switch housing.
6. Pushbutton cap shall be held captive to switch body by retaining element to prevent accidental interchange.
7. Exact shape of switch is optional provided dimensions specified are not exceeded.
8. Terminals and basic switch identification shall be permanently marked as shown on figure 12.

FIGURE 2. Switch - type II, 2 pole (enclosure design 2, 3, and 4; dripproof, watertight, and splashproof with solder terminals).

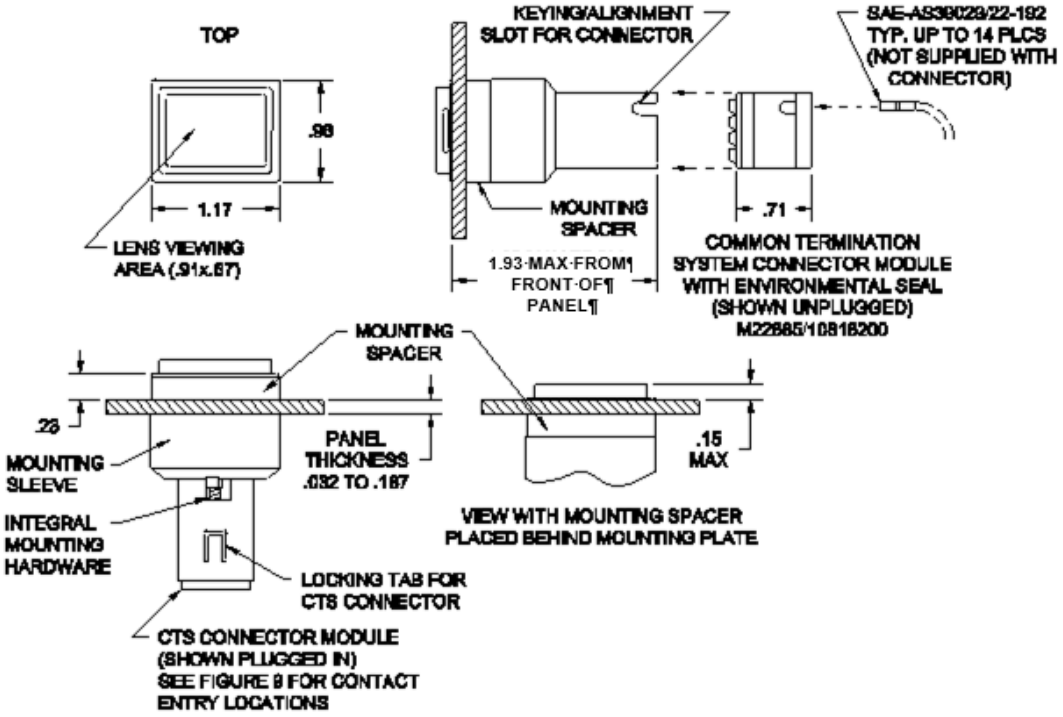

NOTES:

1. Dimensions are in inches.
2. Unless otherwise specified, tolerances are ±.010 for three place decimals and ±.03 for two place decimals.
3. The switch shall accommodate mounting to panels from .032 to .187 thick.
4. A mounting spacer is supplied with each switch unit for MIL-DTL-7788 panel requirements and places the mounting flange flush with the top of a .235 thick edge lighted panel when used in front of the panel. Otherwise, the spacer is used behind the panel.
5. Pushbutton cap shall be designed to prevent incorrect insertion into switch housing.
6. Pushbutton cap shall be held captive to switch body by retaining element to prevent accidental interchange.
7. The Common Termination System (CTS) connector shall be designed and constructed to meet the performance requirements of this document. These items, M22885/10818200 for 2 pole switches and M22885/10818442 for 2 pole switches with Optional electronic components, shall be acquired from a source listed on QPL-22885.
8. The CTS connector shall be removable from the switch housing to allow the housing to be mounted separately. The connector may be wired during harnessing operations, allowing bench testing without the need of the switch housing
9. The CTS connector shall be considered as a connector plug that may be separated from the switch housing for the convenience of installation.
10. The CTS connector shall be removable from the switch body by use of a M22885/108-T8234 CTS module extraction tool. Refer to MIL-PRF-22885/108 for details. This item shall be acquired from a source listed on QPL-22885.
11. The CTS connector shall be capable of receiving SAE-AS39029/22-192 socket contacts crimped to a 20, 22, or 24 gauge wire.
12. The CTS connector shall be capable of having the socket contacts inserted or removed using an M81969/14-10 contact insertion/removal tool per SAE-AS81969/14.
13. Exact shape of switch is optional provided dimensions specified are not exceeded.
14. Terminals and basic switch identification shall be permanently marked as shown on figure 12.

FIGURE 3. Switch - type III (enclosure design 1; unsealed with 2 pole or compact body with common termination system).

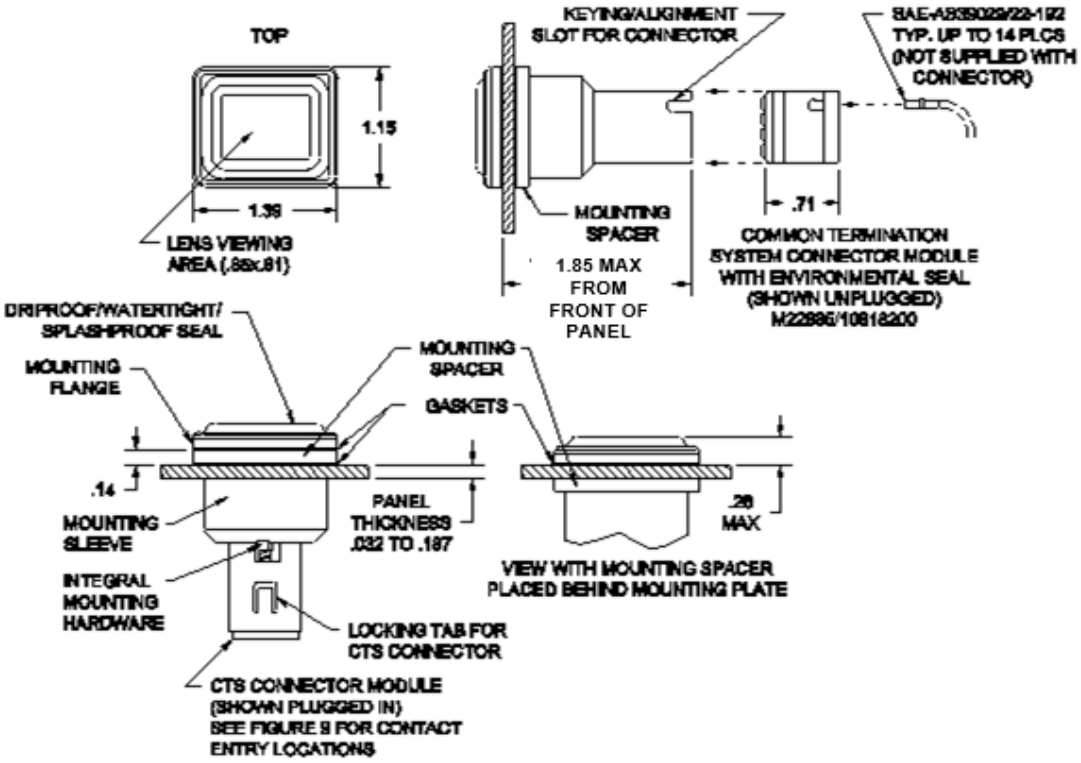

Notes

1. Dimensions are in inches.
2. Unless otherwise specified, tolerances are ±.010 for three place decimals and ±.03 for two place decimals.
3. The switch shall accommodate mounting to panels from .032 to .187 thick.
4. A mounting spacer is supplied with each switch unit for MIL-DTL-7788 panel requirements and places the mounting flange flush with the top of a .235 thick edge lighted panel when used in front of the panel. Otherwise, the spacer is used behind the panel.
5. Pushbutton cap shall be designed to prevent incorrect insertion into switch housing.
6. Pushbutton cap shall be held captive to switch body by retaining element to prevent accidental interchange.
7. The Common Termination System (CTS) connector shall be designed and constructed to meet the performance requirements of this document. These items, M22885/10818200 for 2 pole switches and M22885/10818442 for 2 pole switches with Optional electronic components, shall be acquired from a source listed on QPL-22885.
8. The CTS connector shall be removable from the switch housing to allow the housing to be mounted separately. The connector may be wired during harnessing operations, allowing bench testing without the need of the switch housing
9. The CTS connector shall be considered as a connector plug that may be separated from the switch housing for the convenience of installation.
10. The CTS connector shall be removable from the switch body by use of a M22885/108-T8234 CTS module extraction tool. Refer to MIL-PRF-22885/108 for details. This item shall be acquired from a source listed on QPL-22885.
11. The CTS connector shall be capable of receiving SAE-AS39029/22-192 socket contacts crimped to a 20, 22, or 24 gauge wire.
12. The CTS connector shall be capable of having the socket contacts inserted or removed using an M81969/14-10 contact insertion/removal tool per SAE-AS81969/14.
13. Exact shape of switch is optional provided dimensions specified are not exceeded.
14. Terminals and basic switch identification shall be permanently marked as shown on figure 12.

FIGURE 4. Switch - type IV (enclosure design 2, 3, and 4; dripproof, watertight and splashproof with 2 pole or compact body with common termination system)

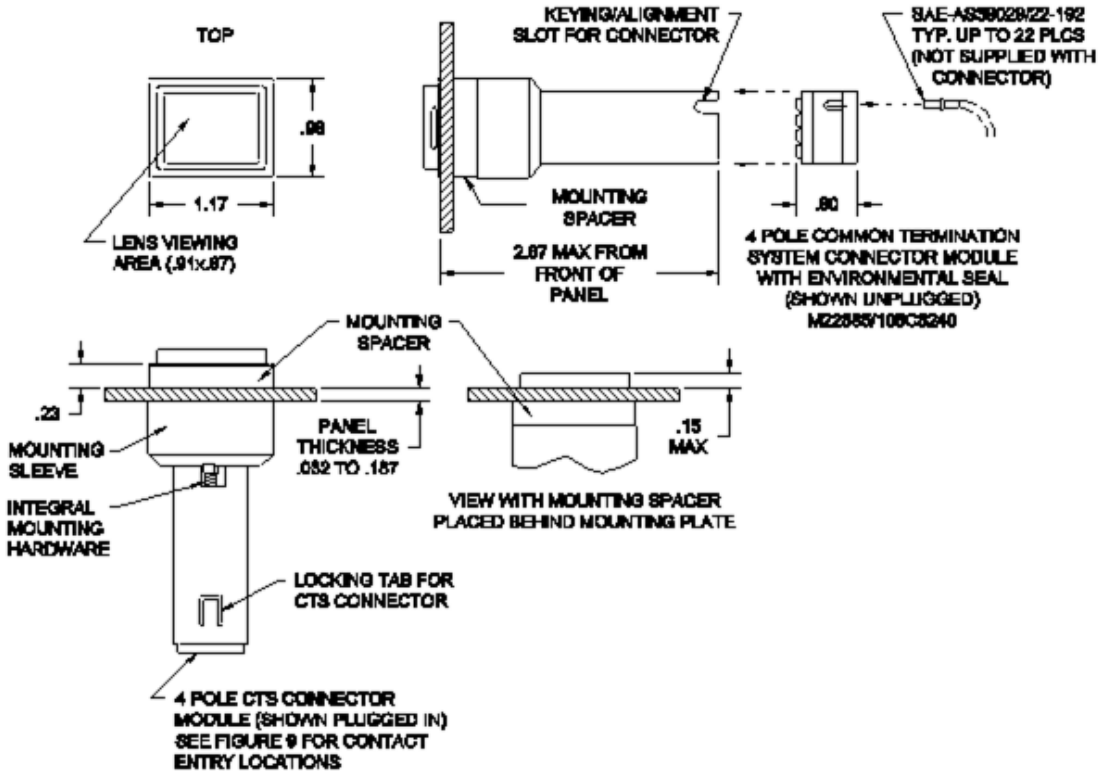

NOTES:

1. Dimensions are in inches.
2. Unless otherwise specified, tolerances are ±.010 for three place decimals and ±.03 for two place decimals.
3. The switch shall accommodate mounting to panels from .032 to .187 thick.
4. A mounting spacer is supplied with each switch unit for MIL-DTL-7788 panel requirements and places the mounting flange flush with the top of a .235 thick edge lighted panel when used in front of the panel. Otherwise, the spacer is used behind the panel.
5. Pushbutton cap shall be designed to prevent incorrect insertion into switch housing.
6. Pushbutton cap shall be held captive to switch body by retaining element to prevent accidental interchange.
7. The Common Termination System (CTS) connector shall be designed and constructed to meet the performance requirements of this document. These items, M22885/108C8240 for 4 pole switches and M22885/10818440 for 4 pole switches with Optional electronic components, shall be acquired from a source listed on QPL-22885.
8. The CTS connector shall be removable from the switch housing to allow the housing to be mounted separately. The connector may be wired during harnessing operations, allowing bench testing without the need of the switch housing
9. The CTS connector shall be considered as a connector plug that may be separated from the switch housing for the convenience of installation.
10. The CTS connector shall be removable from the switch body by use of a M22885/108-T8234 CTS module extraction tool. Refer to MIL-PRF-22885/108 for details. This item shall be acquired from a source listed on QPL-22885.
11. The CTS connector shall be capable of receiving SAE-AS39029/22-192 socket contacts crimped to a 20, 22, or 24 gauge wire.
12. The CTS connector shall be capable of having the socket contacts inserted or removed using an M81969/14-10 contact insertion/removal tool per SAE-AS81969/14.
13. Exact shape of switch is optional provided dimensions specified are not exceeded.
14. Terminals and basic switch identification shall be permanently marked as shown on figure 12.

FIGURE 5. Switch - type V (enclosure design 1: unsealed with 4 pole or high capacity body with common termination system)

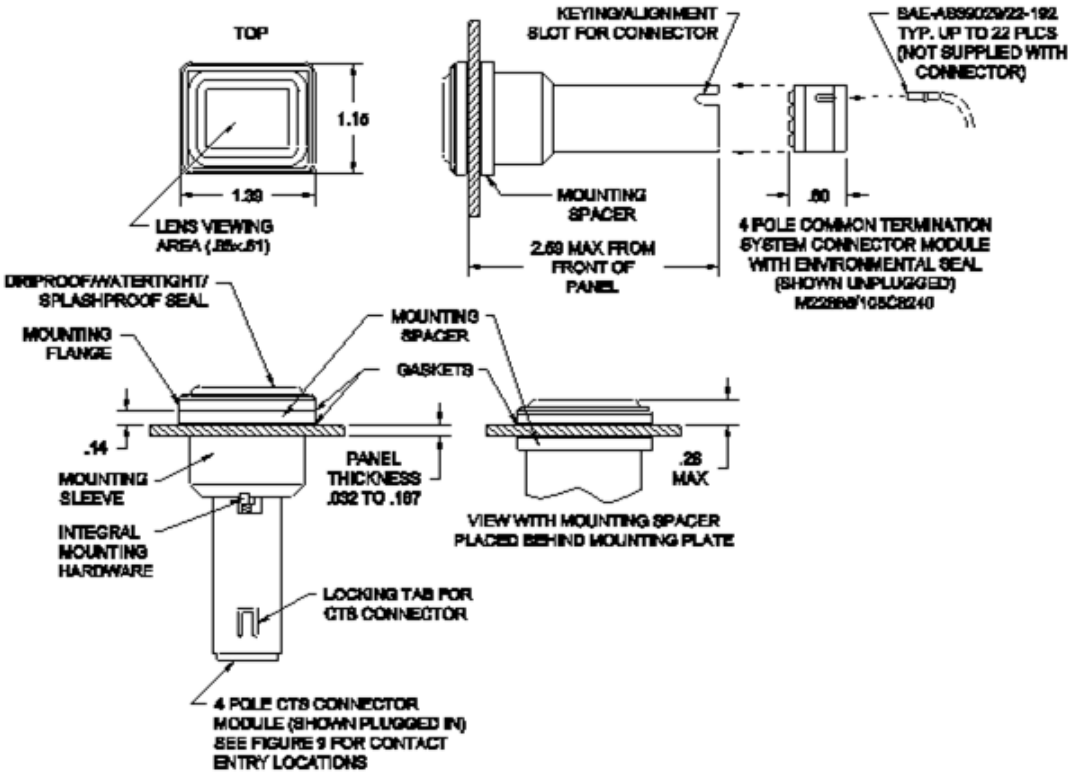

NOTES:

1. Dimensions are in inches.
2. Unless otherwise specified, tolerances are ±.010 for three place decimals and ±.03 for two place decimals.
3. The switch shall accommodate mounting to panels from .032 to .187 thick.
4. A mounting spacer is supplied with each switch unit for MIL-DTL-7788 panel requirements and places the mounting flange flush with the top of a .235 thick edge lighted panel when used in front of the panel. Otherwise, the spacer is used behind the panel.
5. Pushbutton cap shall be designed to prevent incorrect insertion into switch housing.
6. Pushbutton cap shall be held captive to switch body by retaining element to prevent accidental interchange.
7. The Common Termination System (CTS) connector shall be designed and constructed to meet the performance requirements of this document. These items, M22885/108C8240 for 4 pole switches and M22885/10818440 for 4 pole switches with Optional electronic components, shall be acquired from a source listed on QPL-22885.
8. The CTS connector shall be removable from the switch housing to allow the housing to be mounted separately. The connector may be wired during harnessing operations, allowing bench testing without the need of the switch housing
9. The CTS connector shall be considered as a connector plug that may be separated from the switch housing for the convenience of installation.
10. The CTS connector shall be removable from the switch body by use of a M22885/108-T8234 CTS module extraction tool. Refer to MIL-PRF-22885/108 for details. This item shall be acquired from a source listed on QPL-22885.
11. The CTS connector shall be capable of receiving SAE-AS39029/22-192 socket contacts crimped to a 20, 22, or 24 gauge wire.
12. The CTS connector shall be capable of having the socket contacts inserted or removed using an M81969/14-10 contact insertion/removal tool per SAE-AS81969/14.
13. Exact shape of switch is optional provided dimensions specified are not exceeded.
14. Terminals and basic switch identification shall be permanently marked as shown on figure 12.

FIGURE 6. Switch- type VI (enclosure design 2, 3, and 4: dripproof, watertight, and splashproof with 4 pole or high capacity body with common termination system).

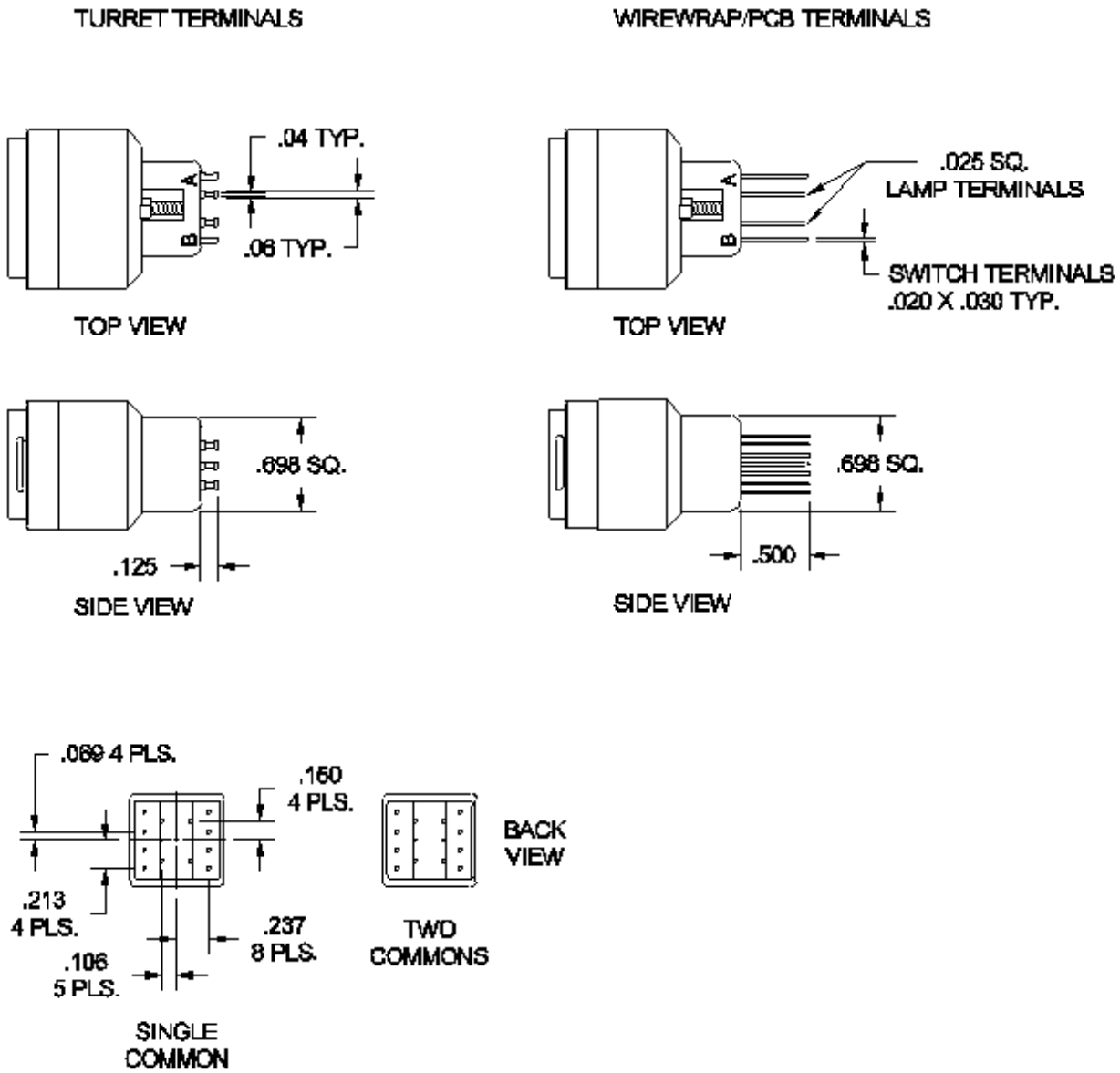

NOTES:
1. Dimensions are in inches.
2. Unless otherwise specified, tolerances are ± .010 for three place decimals and ±.03 for two place decimals.

FIGURE 7. Switch and lighting circuit terminations, Type I and II, dimensions and center location.

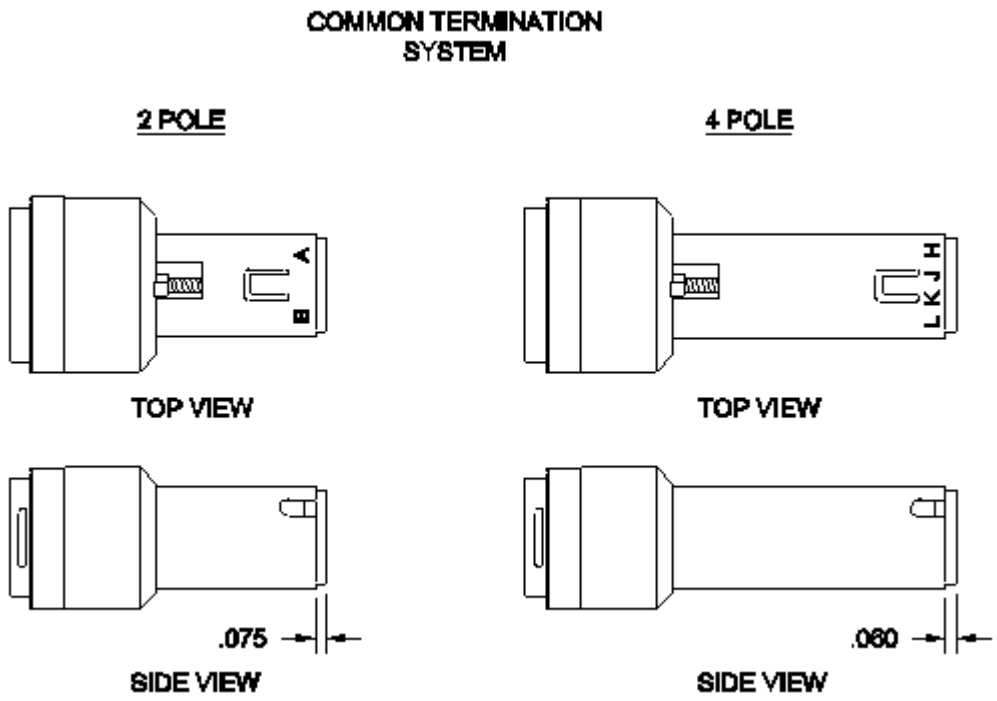

NOTES:
1. Dimensions are in inches.
2. Unless otherwise specified, tolerances are ± .010 for three place decimals and ±.03 for two place decimals.

FIGURE 8. Switch and lighting circuit terminations, Common Termination System (CTS), interface.

SWITCH CIRCUIT CONFIGURATIONS
Terminal position as viewed from front of the display.
Any switch position can be replaced with a suitable optional electronic component

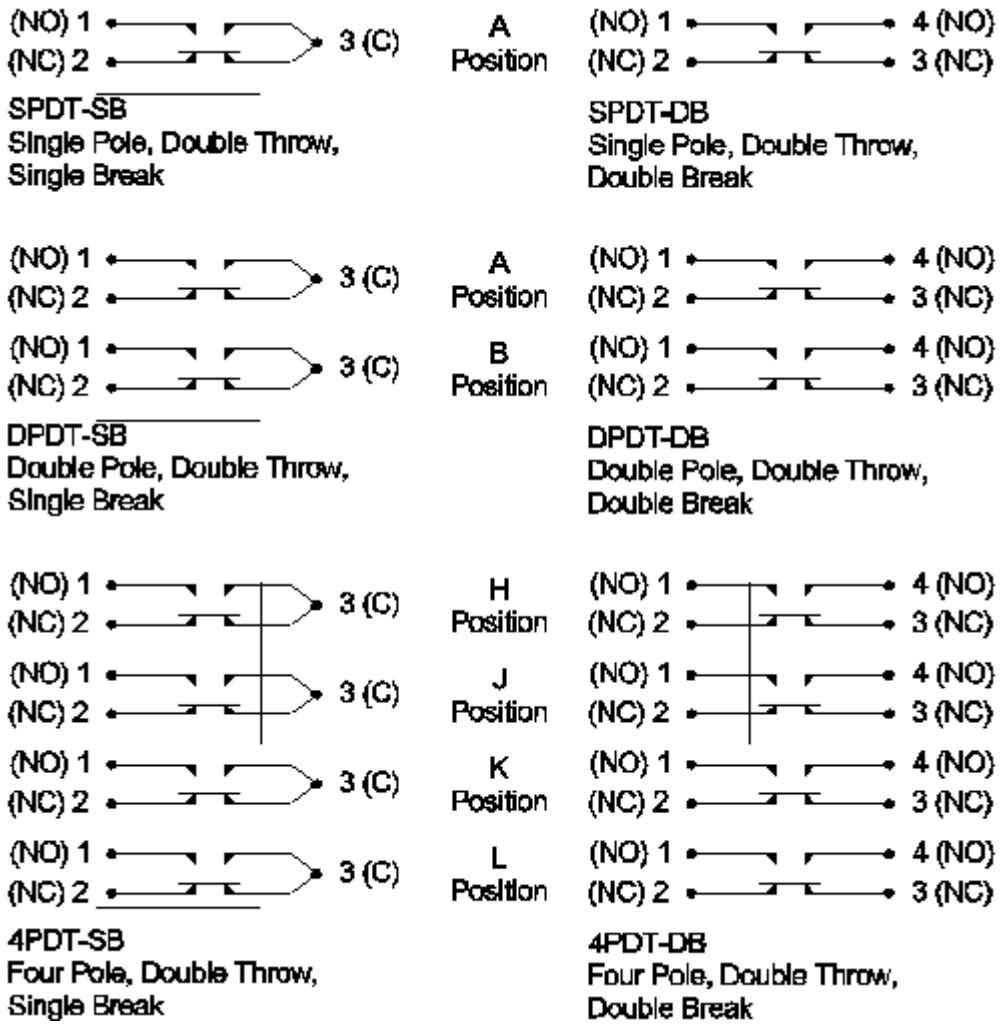

FIGURE 9. Switch circuit configurations, schematics.

LED CIRCUIT SCHEMATIC BLOCK DIAGRAMS

28 VDC OR 28 VAC

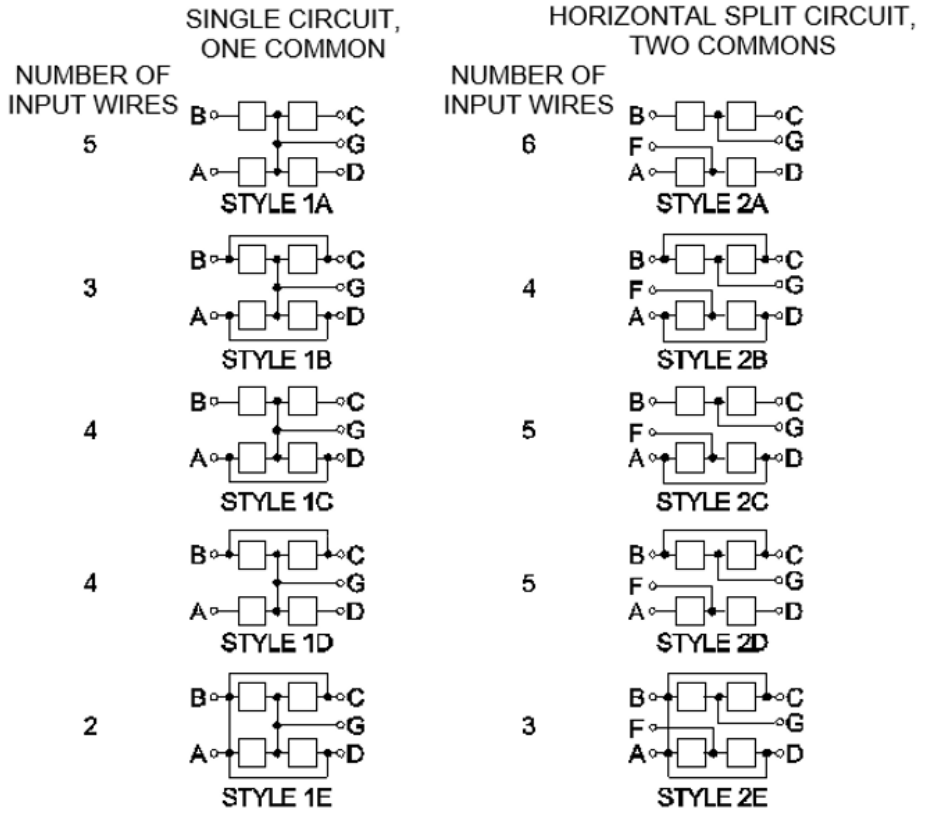

The ☐ REPRESENTS AN ENTIRE QUADRANT'S ELECTRONIC CIRCUIT INCLUDING 4 LEDS AND THE DRIVER AND PROTECTION CIRCUIT (DDPC). DIAGRAMS ARE AS VIEWED FROM THE FRONT OF THE DISPLAY.

FIGURE 10. LED circuit configurations, schematics.

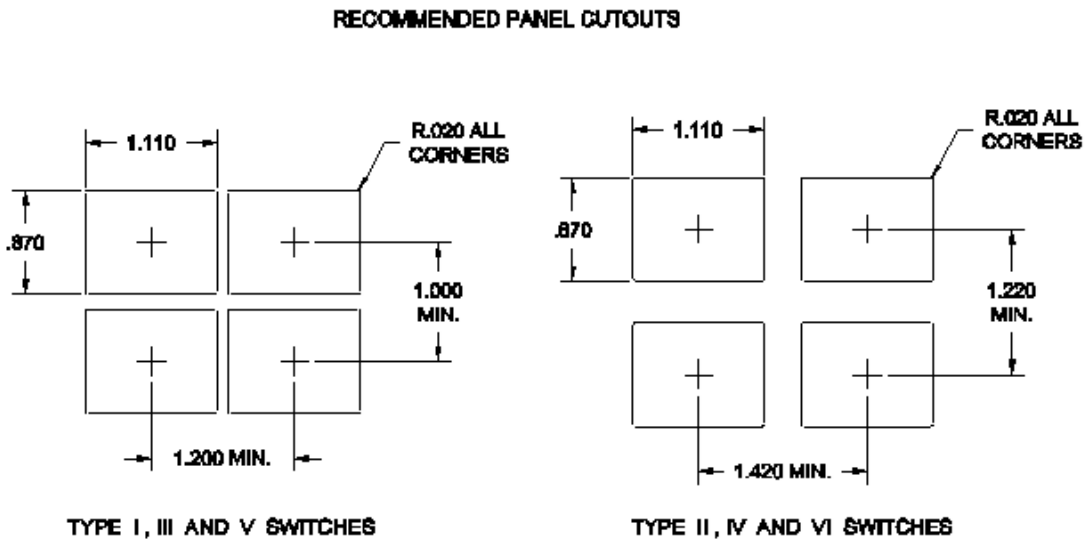

NOTES:

1. Dimensions are in inches.
2. Unless otherwise specified, tolerances are ± .010 for three place decimals and ±.03 for two place decimals.

FIGURE 11. Recommended panel cutouts.

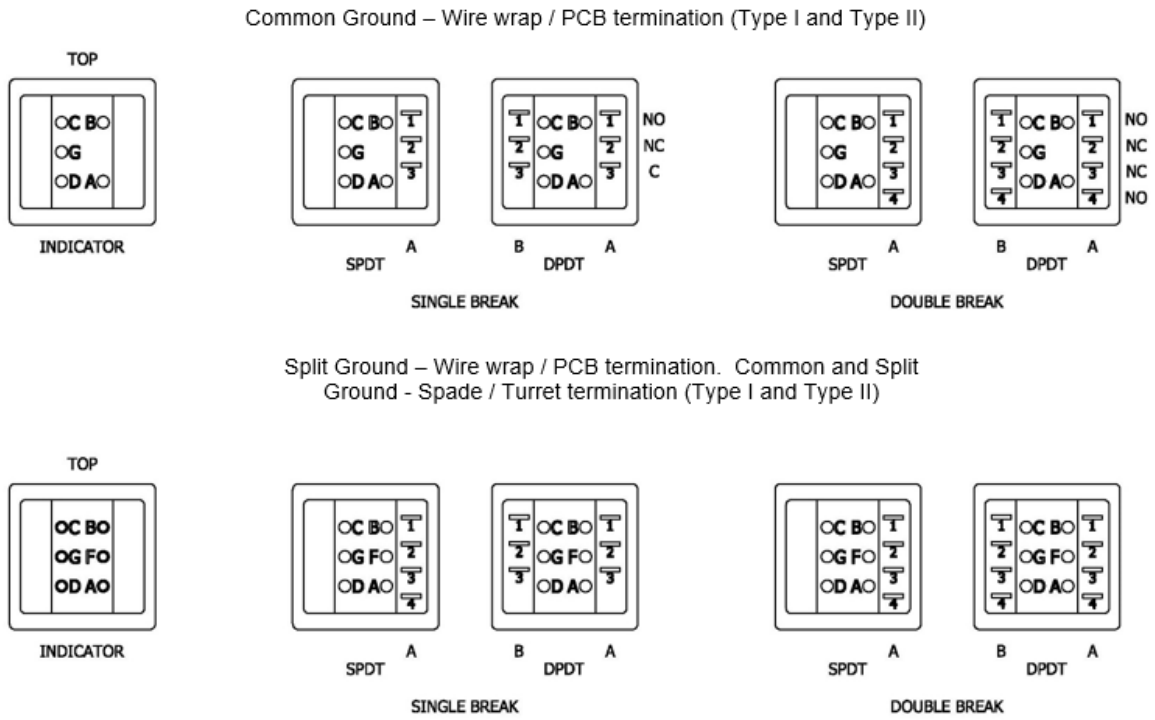

FIGURE 12. Switch poles and lighting circuit terminal arrangements and identification.

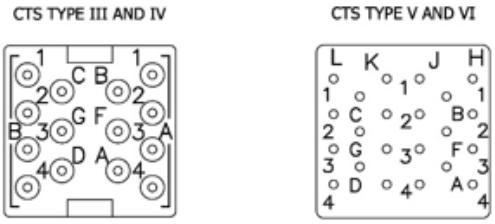

NOTES:

1. ALL Type III and IV switches have identical switch and lighting circuit terminal arrangement identification. All Type V and VI switches have identical switch and lighting circuit terminal arrangement identification.
2. To make the various CTS combinations, an MS27488-20 per MS27488 sealing plug may be placed in the unused locations
3. A and B or H, J, K,and L identify each switch pole or optional electronic component locations. 1, 2, 3, and 4 identify the switch or optional electronic component units contact termination
4. A, C, B, G, F, D identify the cap circuit terminations.

FIGURE 12. Switch poles and lighting circuit terminal arrangements and identification - Continued.

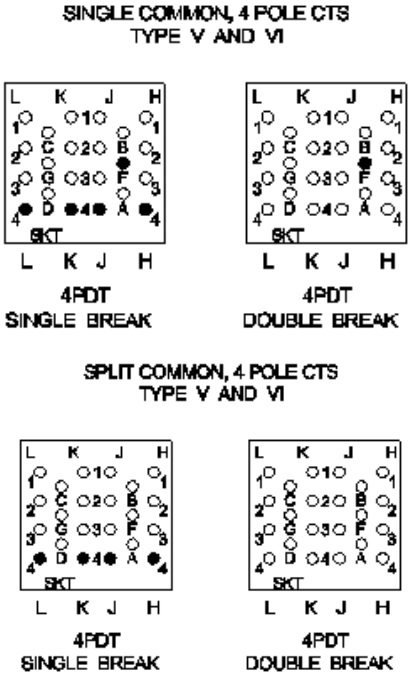

NOTES:

1. All 2 pole common termination system (CTS) switches have identical switch and lighting circuit terminal arrangement identification. All 4 pole CTS switches have identical switch and lighting circuit terminal arrangement identification.
2. To make the various CTS combinations, an MS27488-20 per MS27488 sealing plug is placed in the locations not to be used. In the above identifications, blackened circles indicate where the sealing plugs shall be located to form the described variation.
3. "SKT" identifies the socket side.
4. A and B or H, J, K, and L identify each switch pole.
5. C, B, G, F, D, and A identify the lighting circuit terminations.
6. 1, 2, 3, and 4 identify the switch contact termination.

FIGURE 12. Switch poles and lighting circuit terminal arrangements and identification - Continued.

2 POLE CTS MODULE
(M22885/10818200) FOR TYPE III AND IV SWITCHES
(M22885 /108 18442) FOR TYPE III AND IV SWITCHES WITH OPTIONAL LOGIC COMPONENTS

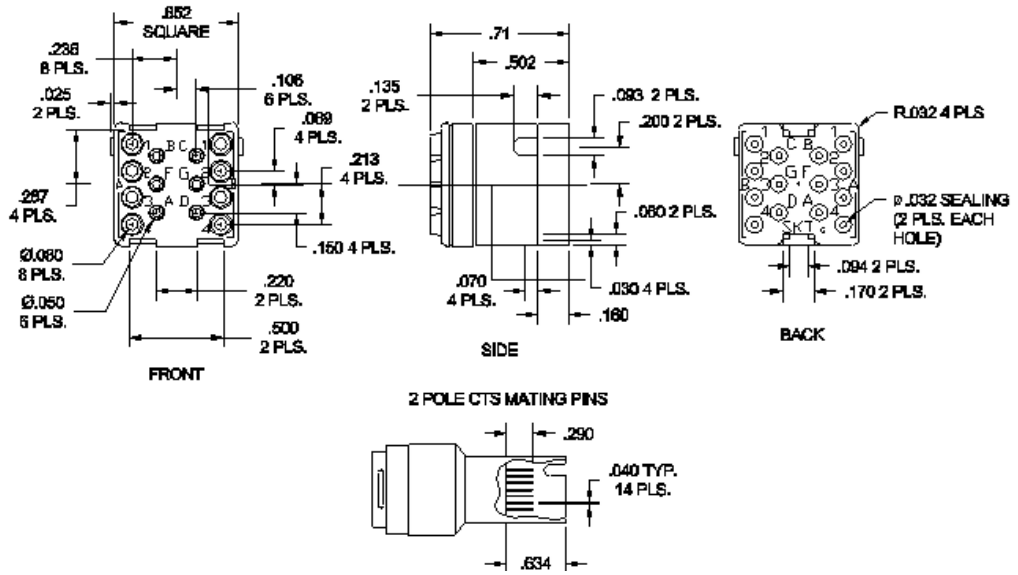

4 POLE CTS MODULE
(M22885/108C8240) FOR TYPE VI AND VI SWITCHES
(M22885 /10818440) FOR TYPE V AND VI SWITCHES WITH OPTIONAL LOGIC COMPONENTS

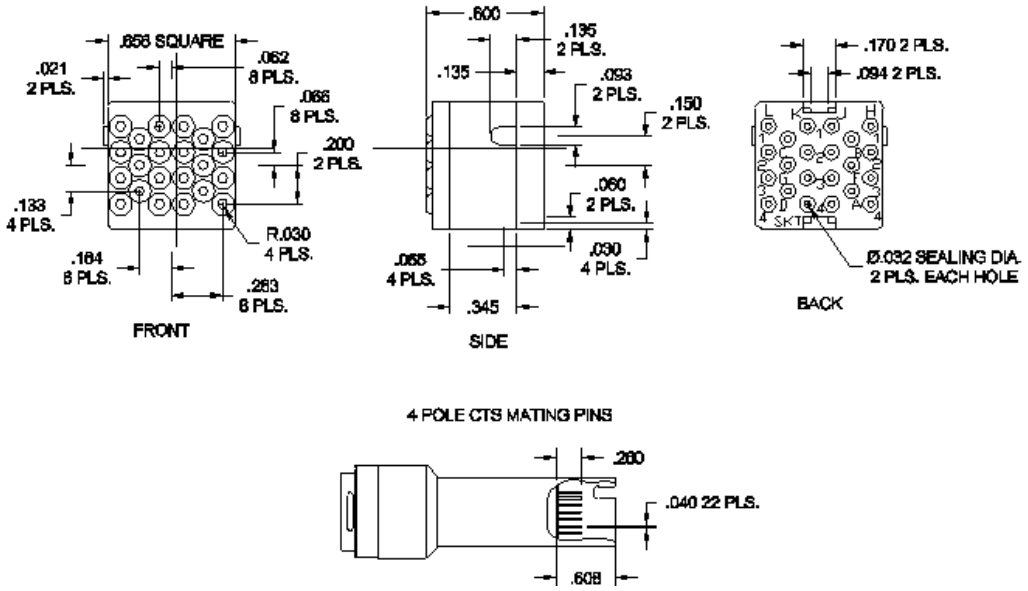

NOTES:
1. Dimensions are in inches.
2. Unless otherwise specified, tolerances are ± .010 for three place decimals and ±.03 for two place decimals.

FIGURE 13. CTS modules

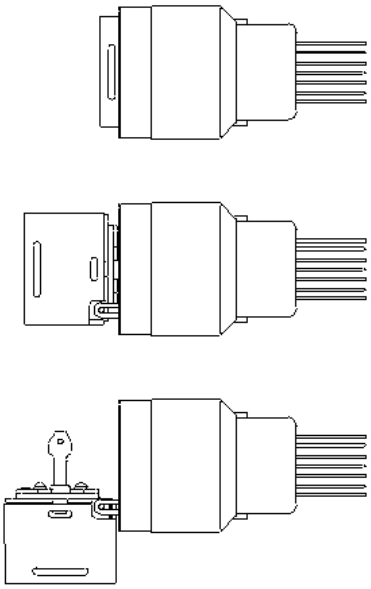

NOTES:
1. Retaining element shall be permanently attached to switch housing.
2. Retaining element shall allow pushbutton cap to be pulled fully out of switch housing and dropped down 90 degrees. (Pushbutton cap must still be retained.)
3. Pushbutton cap shall be removable from the retaining element to allow caps to be changed if necessary.

FIGURE 14. Pushbutton cap retaining element.

REQUIREMENTS:

Design and construction: See figures 1 through 14.

Complete switch shall consist of:

One switch body, mounting sleeve, a spacer, and an LED lens module pushbutton cap. Type II, IV and VI switch bodies also include a splashproof mounting flange. When specified, type III, IV, V, and VI switch bodies also include an environmentally sealed plug-on connector, common termination system (CTS) designed in accordance with the Terminal Junction System (TJS) of SAE-AS81714. When specified, type III, IV, V, and VI switch bodies may also include optional electronic components.

LED lens module pushbutton cap includes non-replaceable LED lamps, LED circuit assembly with LED driver, dimming and electrical protection circuitry, night vision goggle compatibility when specified, EMI/RFI shielding efficiency when specified, and an integral dripproof, watertight and splashproof seal when specified.

Material:

Housing: Corrosion-resistant steel or other material that when selected will allow the switch to meet the performance requirements of this specification sheet and MIL-PRF-22885.

Mounting sleeve: Thermoplastic, black or other material that when selected will allow the switch to meet the performance requirements of this specification sheet and MIL-PRF-22885.

Panel mounting spacer: Thermoplastic, black, or aluminum, black corrosion resistant steel, black or other material that when selected will allow the switch to meet the performance requirements of this specification sheet and MIL-PRF-22885.

Front lens material: High temperature heat-resistant thermoplastic or other material that when selected will allow the switch to meet the performance requirements of this specification sheet and MIL-PRF-22885.

Enclosure design:
Symbol 1 (unsealed) for type I, type III, and type V.
Symbol 2 (dripproof) for type II, type IV, and type VI.
Symbol 3 (watertight) for type II, type IV, and type VI.
Symbol 4 (splashproof) for type II, type IV, and type VI.

Temperature characteristic: -55°C to +71°C with lighting circuit energized, -55°C to +85°C with lighting circuit unenergized.

Vibration grade: 3 (10 to 2,000 Hz).

Operating characteristics:
Actuation force: 2 to 5 pounds.
Actuation travel: 0.150 ±0.030 inch.
Lens module extraction force: 2 to 5 pounds.

Strength of actuator: 25 pounds.

Sand and dust: Applicable to type II, type IV, and type VI.

Shock: 75 g (MIL-STD-202-213, test condition B).

Weight:
Connector (CTS): 6 grams maximum.
4 pole connector (CTS): 6 grams maximum.
Type I (solder terminations): 32 grams (EMI Shielded 37 grams) maximum.
Type II (solder terminations): 34 grams (EMI Shielded 46 grams) maximum.
Type III (CTS): 35 grams (EMI Shielded 40 grams) maximum.
Type IV (CTS): 39 grams (EMI Shielded 51 grams)maximum.
Type V (4 pole CTS): 45 grams (EMI Shielded 51 grams) maximum.
Type VI (4 pole CTS): 50 grams (EMI Shielded 62 grams)maximum.

Seal:

Watertight test: When specified, test in accordance with MIL-PRF-22885 and MIL-STD-108. There shall be no leakage of water through the panel and pushbutton seals as determined by visual examination and the dielectric withstanding voltage test.

Splashproof test: When specified, test in accordance with MIL-PRF-22885 and MIL-STD-108. There shall be no leakage of water through the panel and pushbutton seals as determined by visual examination and the dielectric withstanding voltage test.

Mechanical endurance: 100,000 cycles.

10,000 cycles of operation at -55°C ±2°C (cycling rate shall not exceed 18 cpm during the low temperature portion of this test for sealed switches), 20,000 cycles of operation at +85°C ±2°C and 70,000 cycles of operation at room temperature.

Electrical endurance: 50,000 cycles.

Intermediate current: Applicable, 50,000 cycles.

Logic Level Life Switching: Applicable to gold-plated contacts, 100,000 cycles.

Electrical ratings: See table I.

Color and luminance: See table II and table III.

Sunlight readability: Applicable to Display Type S

Display Types: See table II and table III for specific colors.

Display Type S:

Requirements: All legends shall be capable of being read in direct sunlight and at any glare-producing, specularly reflective angles up to 15 degrees ±2 degrees to the normal of the display viewing surface. The legend background shall illuminate in color with an average display luminance as shown in Table II and Table III when energized at full rated voltage. The average luminance contrast ratio of each lighted legend character to background shall be 0.6 minimum. The average luminance contrast ratio of each unlighted legend character to background shall have an absolute value equal to or less than 0.1. The average luminance contrast ratio for each color shall not be less than the values listed in table V for the respective glare-producing angle.

Test method: The test procedure for measuring the average luminance contrast ratios for sunlight readability shall be the specular reflectance test in accordance with MIL-PRF-22885.

Display type N:

Requirements: All legends shall be visible white with an opaque black background. The legend characters shall always be visible in any light ambience except in darkened conditions. In darkened conditions, the legend characters shall illuminate in color with an average luminance of 0.5 to 3.0 foot-lamberts when energized at full rated voltage.

Test method: The test procedure for measuring the average luminance and color of the illuminated visible white legend characters shall be in accordance with MIL-PRF-22885.

Display type D:

Requirements: All legends shall be visible white with an opaque black background. The legend characters shall illuminate in color with an average display luminance in excess of 100 foot-lamberts when energized at full rated voltage.

Test method: The test procedure for measuring the average luminance and color of the illuminated visible white legend characters shall be in accordance with MIL-PRF-22885.

Display type A:

Requirements: All legends shall be visible white on an obscure black background. The legend background shall illuminate in color with an average display luminance in excess of 200 foot-lamberts when energized at full rated voltage.

Test method: The test procedure for measuring the average luminance and color of the illuminated display background shall be in accordance with MIL-PRF-22885.

Display type B:

Requirements: All legends shall be opaque black on an obscure black background. The legend characters shall remain black and the legend background shall illuminate in color with an average display luminance in excess of 200 foot-lamberts when energized at full rated voltage.

Test method: The test procedure for measuring the average luminance and color of the illuminated display background shall be in accordance with MIL-PRF-22885.

Display type W:

Requirements: All legends shall be opaque black on a visible white background. The legend characters shall remain black and the legend background shall illuminate in color with an average display luminance in excess of 100 foot-lamberts when energized at full rated voltage.

Test method: The test procedure for measuring the average luminance and color of the illuminated display background shall be in accordance with MIL-PRF-22885.

Display type X:

Requirements: All legends shall be visible only in ambient light as white lettering on black background. Legends do not illuminate and the lens module does not contain internal electronics.

Test method: The test procedure shall be by visual inspection of the legend only.

Display type Ø:

No display is visible, only a matte black background. The lens module does not illuminate and does not contain internal electronics.

Display type H:

Requirements: All legends on an opaque black background visible when illuminated (same as display type S except contrast requirements do not apply)

Test method: The test procedure for measuring the average luminance and color of the illuminated visible white legend characters shall be in accordance with MIL-PRF-22885.

Night vision imaging system (NVIS) compatibility (except as noted):

NVIS Green A: Shall meet all MIL-STD-3009 and MIL-L-85762 requirements for illuminated controls for type I, class A and type II, class B equipment.

NVIS Green B: Shall meet all MIL-STD-3009 and MIL-L-85762 requirements for illuminated controls for type I, class A and type II, class B equipment.

NVIS Blue: Shall meet all MIL-STD-3009 and MIL-L-85762 NVIS radiance requirements for illuminated controls and advisory lights for type I, Class A and type II, Class B equipment. The color shall meet the requirements as specified herein.

NVIS White: Shall meet all MIL-STD-3009 requirements for utility lighting (white) for type I, class A and type II, class B equipment.

NVIS Yellow Class A: Shall meet all MIL-STD-3009 and MIL-L-85762 requirements for caution signals for type I, class A and type II, class B equipment.

NVIS Yellow Class B: Shall meet all MIL-STD-3009 and MIL-L-85762 requirements for caution signals for type I, class B and type II, class B equipment.

NVIS Red: Shall meet all MIL-STD-3009and MIL-L-85762 requirements for warning signals for type I, Class B and type II, class B equipment.

Alt NVIS Red: Indicator with Red color appearance for warning signals, similar in color to aviation red with reduced NVIS radiance but not compliant to the requirements of MIL-STD-3009.

Test methods: The test procedure for measuring luminance, chromaticity and spectral radiance shall be in accordance with MIL-STD-3009 and MIL-L-85762 for illuminated controls (for NVIS green A and NVIS green B), illuminated controls and advisory lights (for NVIS blue), caution signals (for NVIS yellow) and warning signals (for NVIS red).

The night vision goggle compatible feature, when specified, is in addition to the sunlight readable feature and all minimum sunlight readable requirements shall be maintained on all type S displays along with the unique requirements for night vision goggle compatibility. When night vision goggle compatibility is specified for type N displays (visible legend), all the requirements for color and NVIS radiance in accordance with MIL-STD-3009 shall be satisfied when display is operated at the specified luminance level (see table III).

Lens module pushbutton caps containing NVIS compatible displays are marked with NVIS Type ( ),Class ( ), in accordance with MIL-STD-3009 and MIL-L-85762.

Electrical environment requirements:

The LED illuminated display and related circuitry shall not be adversely affected when subjected to the following electrical environmental conditions specified in the noted standards:

Abnormal Power Surge: A minimum of 10 voltage surges of 80 VDC, 100 ms. are applied directly to the lighting circuits at a rate of 10 per minute. This test meets or exceeds the abnormal DC power surge requirements of RTCA/DO-160 Section 16, Category Z; and MIL-STD-704, 28 VDC Abnormal Power Operation.

Voltage Spike: A minimum of 60 pulses in each polarity with 600 volt amplitude, 10 µs duration and source impedance of less than 0.5 ohms are applied directly to the lighting circuits at a rate of approximately one pulse per second. This test meets or exceeds the voltage spike requirements of RTCA/DO-160E, Section 17, Category A and MIL-STD-461, CS06, Spike 1.

Audio Frequency Conducted Susceptibility: A 10 Hz to 150 kHz sine wave signal source of 7 VAC RMS is superimposed directly onto the 28 VDC power supplying the lighting circuits. This test meets or exceeds the requirements of RTCA/DO-160, Section 18, Category Z; and MIL-STD-461, CS101, Curve 1.

Induced Signal Susceptibility: An electric field strength test of 10,000 volts per meter from 350 to 800 Hz thereafter reducing to a minimum field strength of 1000 volts per meter at 32 kHz and a separate magnetic field strength test of 120 amperes per meter from 350 to 800 Hz thereafter reducing to a minimum field strength of 2 amperes per meter at 32 kHz is coupled to the test article lighting circuit interconnection cable while the display is visually monitored for readability. This test meets or exceeds the test levels specified in RTCA/DO-160, Section 19, Category CW.

Radio Frequency Conducted Susceptibility: A 10 kHz to 400 MHz radio frequency continuous wave (CW) signal source of (7.5 V, 150 mA, 50 ohm) is superimposed directly onto the 28 VDC power supplying the lighting circuits. This test meets or exceeds the injected signal requirements of, RTCA/DO-160 Section 20, Category W and MIL-STD-461, CS114, Curve 4.

Radio Frequency Radiated Susceptibility: The test article with unshielded cables is mounted to a composite mounting plate and placed in a transverse electromagnetic (TEM) cell where it is subjected to a continuous wave (CW) field strength of 200 V/m from 2 MHz to 1 GHz as verified by an isotropic field probe located adjacent to the test article. This test meets or exceeds the field strength requirements of RTCA/DO-160, Section 20, Category Y and MIL-STD-461, RS103, for the specified test frequency range.

Radio Frequency Emissions: The test article design incorporates only passive electronic circuitry, producing no radio frequency emissions. It meets or exceeds the requirements of RTCA/DO-160, Section 21 and MIL-STD-461, CE101, CE102, RE101 and RE102.

Damped Sinusoidal Transient: A minimum of 300 damped sinusoidal transient events with 600 volt amplitude and 1 MHz fundamental frequency are applied directly to the lighting circuits at a rate of one per second. This test meets or exceeds the damped sinusoidal waveform requirements of RTCA/DO-160, Section 22, Waveform 3, Category A3XXX; and the test levels of MIL-STD-461, CS116 at 1 MHz, 5 ampere, 100 ohm.

Lightning Induced Transient: A voltage source of 1500 VDC is applied between the lighting circuits and case ground for a minimum of one minute. Ten additional groups of fourteen Multiple Burst Ground Injection test pulses at an amplitude of 750 V and duration of 120 us are separately applied between the lamp circuits and case ground. These tests meet or exceed the Pin Injection lightning requirements of RTCA/DO-160, Section 22, Category A4XXX; and the dielectric withstanding test of MIL-PRF-22885.

Electrostatic Discharge: A minimum of 10 pulses in each polarity at 15,000 volts, 150 pF and 330 ohms are applied to operator accessible areas of the test article in both a powered and un-powered state. This test meets or exceeds the ESD requirements of RTCA/DO-160, Section 25.

EMI/RFI shielding:

Requirement: When specified, the EMI/RFI shielding attenuation shall be not less than 60 dB over the frequency range from 100 to 1,000 MHz.

Test method: Switches shall be tested to determine the shielding effectiveness in accordance with MIL-PRF-22885, for shielding efficiency.

Measurements are to be performed at the following frequencies:

Frequency	Minimum attenuation
100 MHz	60 dB
200 MHz	60 dB
400 MHz	60 dB
600 MHz	60 dB
800 MHz	60 dB
1,000 MHz	60 dB

Part or Identifying Numbers (PIN): PINs are assigned as follows:

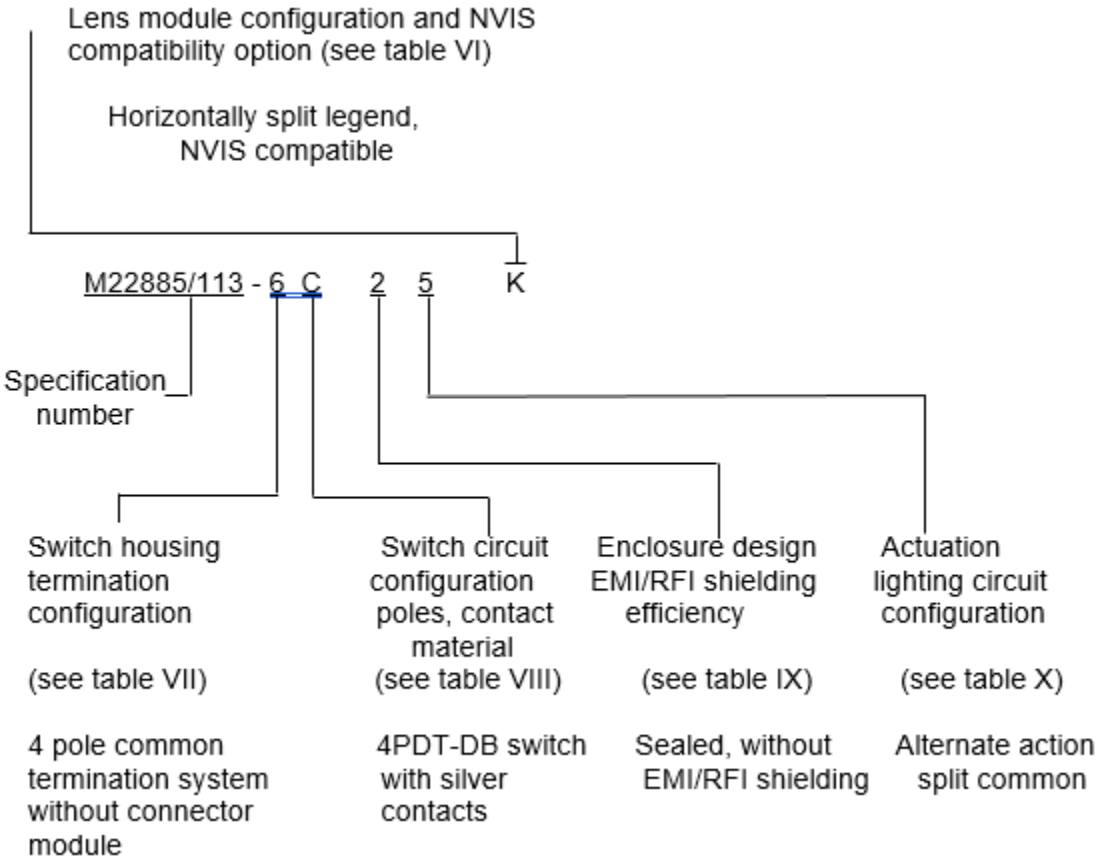

PINs generated do not include display type (N, S, D, A, B or W), segment color (see table VI), or legends. Manufactures may add an additional suffix form the “designation codes” in Table XI to the military PIN for reference only. Acquisition documents shall be prepared in accordance with ordering data in section 6 of MIL-PRF-22885 for category II switches.

Lens module legend positions: Table XI is shown for information only.

The bottom of each LED lens module pushbutton cap shall be marked with the appropriate circuit diagram from Table XII showing whether it is a single common circuit or a horizontal split circuit and also showing the voltage, and any internal quadrant interconnections.

Optional Electronic Components (OEC):

Type III, IV, V, and VI switch/indicator bodies may include one or more “optional electronic components” and will be denoted by a PIN with an “M” from Table XI. For parts marked with an “M” from Table XI, the switch/indicator body shall be marked indicating the specific electronic components included and their specific pole locations within the body. Operating performance of “optional electronic components” shall be per the manufacturer’s specifications and shall have no negative effect on the performance of any sub-miniature electromechanical switch located within the switch/indicator body and illuminated cap. Table I describes the switches and contact material that are available to be used in switch bodies with the different types of “optional electronic components”. Bodies with “optional electronic components” shall be compatible with the appropriate CTS module described in FIGURE 10. “Optional Electronic Components” includes but it is not limited to:

- 4 pin components; designed to replace one switch pole position in Type III or IV configurations (Pole A and/or Pole B) or one switch pole position in Type V or VI configurations (Pole H, J, K, and/or L). Switch/indicator body markings for 4 pin components may include: SSR”XX” (solid state relay), DP”XX” (diode pack), TB”XX” (terminal block), and VS”XXX/XX/XX” (voltage sensor) where “X” represents variables which further define the operating characteristics of a specific electronic component.

- 8 pin narrow components; designed to replace two switch pole positions in Type V or VI configurations (Pole J and K). Switch/indicator body markings for 8 pin components may include: EL”X” (electronic latching switch), ER”X” (electronic rotary Switch), DL”X/XX/XX” or DL”X/XX/XX/XX” (logic gate array), and PT”X/XXX/XXX” (edge detector) where “X” represents variables which further define the operating characteristics of a specific electronic component.

- 8 or 12 pin wide components (Wide OEC); designed for Type V or VI configurations in positions of Poles J and K if an 8 pin, and in positions of Poles J, K and L if a 12 pin. See Table I for electrical ratings of internal switches when Wide OECs are present.Switch/indicator body markings for wide OEC pin components may include: SR429/”XXX/XXXXX[XX]” (ARINC converter) where “X” represents variables which further define the operating characteristics of a specific electronic component.

Qualification inspection: All applicants for qualification approval shall demonstrate that each of their items conform to all the requirements specified in the applicable documents singularly and in combination with all other previously qualified items, regardless of manufacturer. Table XIII is based on the use of MIL-PRF-8805 category I or category II basic switches listed on QPL-8805.

Group submission: See table XIV.

Group A inspection: See table XV.

Group B inspection: See table XVI.

TABLE I. Electrical ratings of internal switches when specified.

Contact material	Load	Sea level			50,000 feet	
		28 V dc		115 V ac, 60 Hz	28 V dc	
		NO or NC (amperes max)	2 circuit (amperes max)	NO or NC (amperes max)	NO or NC (amperes max)	2 circuit (amperes max)
Silver (gold finish) 1/	Resistive	7.5	5.0	7.5	4.0	3.0
	Inductive	4.0	2.0	4.0	2.5	1.0
	Motor	4.0	---	---	---	---
	Lamp	1.0	---	---	---	---
Gold Plated 2/	Resistive	1.0	---	---	1.0	---
	Inductive	0.5	---	---	0.5	---
	Low level life applicable: 30 millivolts maximum or peak ac at 10 milliamperes maximum					
Gold Plated (Wide OEC) 3/	Resistive	1.0	---	---	1.0	---
	Inductive	0.5	---	---	0.5	---
	Low level life applicable: 30 millivolts maximum or peak ac at 10 milliamperes maximum.					

1/ Silver contact internal switches can be specified when there are a) no OEC's in the switch body, or b) there are only 4 pin component OEC's specified in the switch body.

2/ Gold plated contact internal switches can be specified when there are a) no OEC's in the switch body, or b) an 8 pin narrow OEC component is specified in the switch body.

3/ Gold plated (Wide OEC) contact internal switches must be specified when a Wide OEC is specified in the switch body.

TABLE II. Illuminated chromaticity and luminance limits (TYPE S).

Color	Color code	x 1/ 3/	y 1/ 3/	Minimum average character luminance with or without EMI/RFI shielding
Red	R	.695 .710 .655 .660	.285 SL 2/ .325 SL 2/	150 foot-lamberts
Green	G	.300 .300 .380 .380	SL 2/ .600 .600 SL 2/	200 foot-lamberts
Yellow	Y	.562 .570 .596 .605	.415 SL 2/ .382 SL 2/	300 foot-lamberts
Cyan 4/	3	.230 .230 .320 .320	.420 .350 .350 .420	150 foot-lamberts
LED Blue	T	.100 .180 .180 .100	.145 .145 .250 .250	200 foot-lamberts
White	A	.330 .350 .400 .400 .380 .330	.330 .330 .380 .420 .420 .370	350 foot-lamberts

1/ Chromaticity is expressed as x and y on the CIE chromaticity diagram. Values shown are corners of the limiting envelope.
2/ SL - spectrum locus (where intersected by other coordinate pair).
3/ Chromaticity limits and luminance levels apply when the displays are energized at full rated voltage.
4/ Cyan is not available as a display type D or display type W

TABLE III. Illuminated chromaticity and luminance limits (TYPE S) for NVIS night vision goggle compatible displays.

Color	Color code	u' 1/	v' 1/	r 1/	Foot-lamberts 3/	Minimum average character luminance with or without EMI/RFI shielding at full rated voltage 4/
NVIS Green A	H	.088	.543	.037	0.1	200 foot-lamberts
NVIS Green B 2/	J	.131	.623	.057	0.1	200 foot-lamberts
NVIS Blue	E	.082	.390	.037	0.1	200 foot-lamberts
NVIS White	Q	.190	.490	.040	0.1	200 foot-lamberts
NVIS Yellow Class A 2/	K	.274	.622	.083	15.0	200 foot-lamberts
NVIS Yellow Class B 2/	U	.274	.622	.083	15.0	200 foot-lamberts
NVIS Red 2/	S	.450	.550	.060	15.0	200 foot-lamberts

1/ Chromaticity is expressed as u' and v' coordinates of the 1976 UCS diagram. The values shown describe a circle whose center is at u', v', and of radius r.
2/ The area enclosed by the described circle intersecting the spectral locus is the envelope limiting the acceptable color space.
3/ Chromaticity limits must be met when the display voltage is set to produce 0.1 foot-lamberts for NVIS green A, NVIS green B and NVIS blue and 15 foot-lamberts (or maximum rated voltage for type N displays) for NVIS yellow Class A, NVIS yellow Class B and NVIS red.
4/ Minimum luminance values apply when the displays are energized at full rated voltage.

TABLE IV. Illuminated chromaticity limits and luminance for Alt NVIS Red sunlight readable displays (type S).

Color	Color code	Lens Module illumination source	Display Type	y' 1/3/	z' 1/3/	Foot-lamberts 3/	Minimum average character luminance with or without EMI/RFI shielding at full rated voltage 4/
Alt NVIS Red 2/	7	LED only	S	0.335	0.002	15	150 foot-lamberts

1/ Chromaticity is expressed as x and y on the CIE chromaticity diagram. Values shown are corners of the limiting envelope.
2/ Alt NVIS Red caps exceed the spectral NVIS radiance output defined for NVIS Red
3/ Chromaticity limits when luminance levels at 15 foot-lamberts
4/ Minimum luminance values apply when the displays are energized at full rated voltage.

TABLE V Minimum contrast ratios for sunlight readable displays (type S) with or without EMI/RFI shielding.

Color	Color code	Condition 1 ($\phi 1 = \phi 2 = 15°$) Contrast ratio	Condition 2 ($\phi 1 = \phi 2 = 30°$) Contrast ratio
Red	R	0.6	0.3
Green	G	0.6	0.3
Yellow	Y	0.6	0.4
Blue	T	0.6	0.3
White	A	0.6	0.4
NVIS Green A	H	0.6	1/
NVIS Green B	J	0.6	1/
NVIS Blue	E	0.6	1/
NVIS White	Q	0.6	1/
NVIS Yellow Class A	K	0.6	1/
NVIS Yellow Class B	U	0.6	1/
NVIS Red	S	0.4	1/
Alt NVIS Red	7	0.4	1/

1/ Condition 2 is not applicable to NVIS compatible colors.

TABLE VI. Lens module configurations.

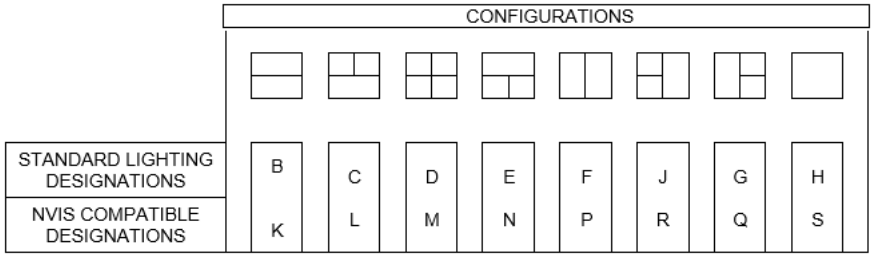

1/ Mounting switches in rotating position as described in table XI does not affect configuration numbers or circuit pin outs

TABLE VII. Switch housing termination configuration.

Termination type	Designation
Turret terminals	1
Wire wrap/PCB terminals	3
CTS (SPDT, DPDT, and indicator light)	
Without connector module 1/	4
With connector module 2/	5
CTS (4PDT only)	
Without connector module 1/	6
With connector module 2/	7
CTS (High Capacity with OEC)	
Without connector module 1/	D
With connector module 2/	E
CTS (Compact with OEC)	
Without connector module 1/	F
With connector module 2/	G

1/ The common termination system designation 4, 6, D, or F is for the CTS switch housing excluding the connector module. The connector module is provided separately so wiring and harnessing can be accomplished independent of the switch housing.

2/ The common termination system designation 5, 7, E or G is for the CTS switch housing including the connector module. The connector module is provided plugged into the switch housing (sealing plugs are in their appropriate positions).

TABLE VIII. Switch circuit configuration, poles and contact material.

Switch poles 1/ and circuit configuration	Contact material	
	Silver with gold finish	Gold plated
SPDT-SB	1	5
DPDT-SB	2	6
SPDT-DB	3	7
DPDT-DB	4	8
4PDT-SB	A	F
4PDT-DB	C	H
Indicator light	O	O
With OEC		M 2/

1/ SPDT - Single pole, double throw.
SB - Single break.
DPDT - Double pole, double throw.
DB - Double break.
4PDT - Four pole, double throw.
2/ With OEC- At least one OEC component is in the switch or indicator body.

TABLE IX. Enclosure design and EMI/RFI shielding efficiency.

Enclosure design	Without EMI/RFI shielding	With EMI/RFI shielding
1-unsealed	1	4
2-Dripproof 3-Watertight 4-Splashproof	2	5

TABLE X. Lighting circuit configuration and actuation.

LED circuit configuration	Actuation		
	Momentary	Alternate	Indicator
Single circuit, one common	1	4	7
Horizontal split circuit two commons	2	5	8
Universal Body	M	L	J

TABLE XI. Lens module legend positions.

DISPLAY TYPE LIGHTING	LEGEND POSITIONS
TYPE S TYPE N TYPE B TYPE A TYPE D TYPE W TYPE X	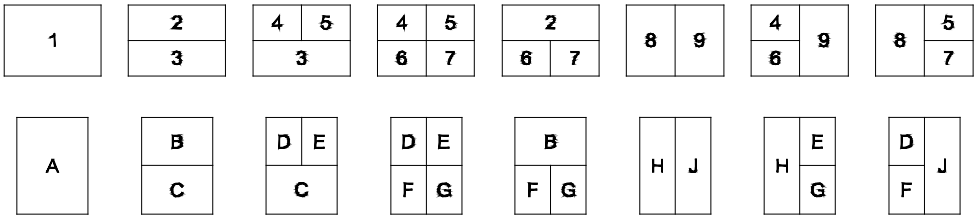
TYPE 0	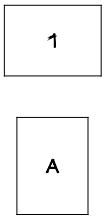

TABLE XII. Voltage, lighting circuit and quadrant interconnection styles. 1/ 2/

QUADRANT INTERCONNECTIONS		VOLTAGE AND DESIGNATION CODE
BLOCK DIAGRAM	DESCRIPTION	28VDC OR 28VAC
	FOUR INPUTS, ALL FOUR QUADRANTS INDEPENDENT	A
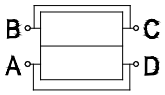	TWO INPUTS, TOP QUADRANTS COUPLED AND BOTTOM QUADRANTS COUPLED	B
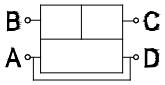	THREE INPUTS, ONLY BOTTOM TWO QUADRANTS COUPLED	C
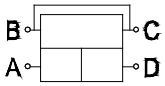	THREE INPUTS, ONLY TOP TWO QUADRANTS COUPLED	D
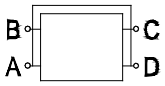	ONE INPUT, ALL FOUR QUADRANTS COUPLED	E

1/ Display quadrant power inputs are labeled A, B, C and D as viewed from the front of the display.
2/ The LED circuit is available with the quadrants A, B, C and D internally connected in various styles so one input wire can activate one or more quadrants thereby reducing the number of input wires necessary to illuminate the display.

TABLE XIII LED lens module pushbutton cap circuit diagrams. 1/ 2/ 3/

28V DC OR 28 VAC

Single Circuit, One Common	Split Circuit, Two Commons
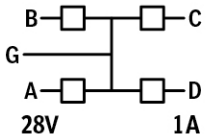	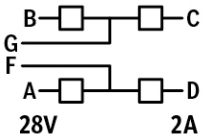
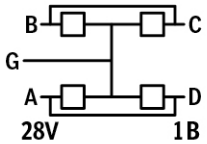	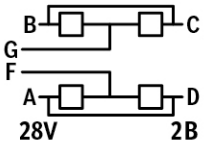
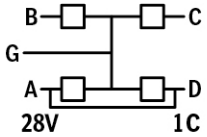	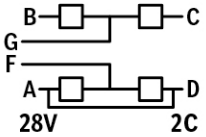
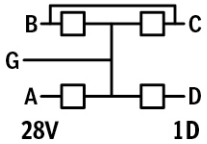	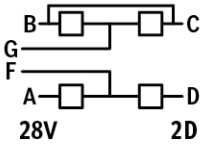
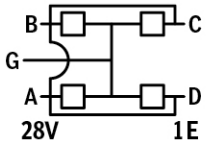	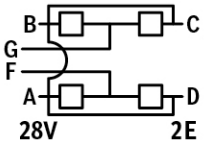

1/ The appropriate circuit diagram must be marked in white lettering on the bottom of the LED lens module pushbutton cap.
2/ The circuit diagrams are as viewed from the front of the display.
3/ The two character identifiers 1A, 1B, etc. are for reference only.

TABLE XIII Cont.. LED lens module pushbutton cap circuit diagrams.- continued 1/ 2/ 3/

28V DC OR 28 VAC

Single Circuit, One Common	Split Circuit, Two Commons
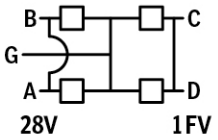	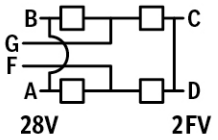
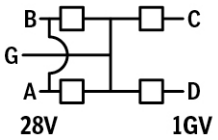	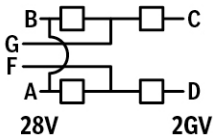
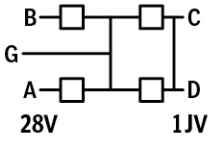	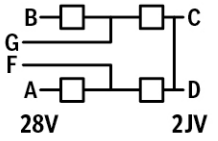

1/ The appropriate circuit diagram must be marked in white lettering on the bottom of the LED lens module pushbutton cap.
2/ The circuit diagrams are as viewed from the front of the display.
3/ The two character identifiers 1A, 1B, etc. are for reference only.

TABLE XIII LED lens module pushbutton cap circuit diagrams. – continued 1/ 2/ 3/

28V DC OR 28 VAC

Single Circuit, One Common	Split Circuit, Two Commons
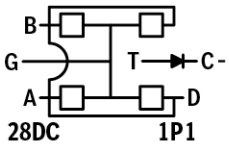	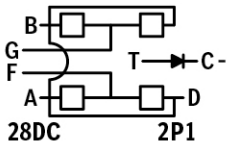
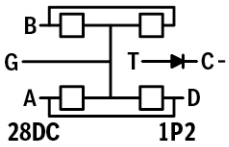	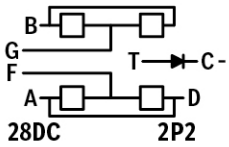
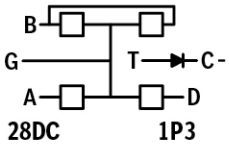	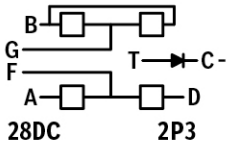
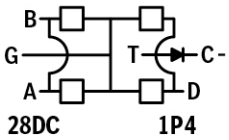	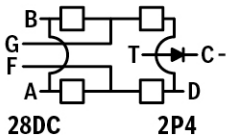
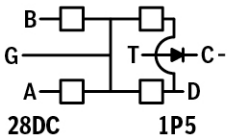	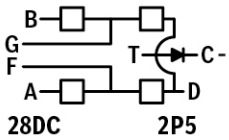

1/ The appropriate circuit diagram must be marked in white lettering on the bottom of the LED lens module pushbutton cap.
2/ The circuit diagrams are as viewed from the front of the display.
3/ The two character identifiers 1P1, 2P5, etc. are for reference only.

TABLE XIV. Qualification inspection, group submission.

Test sample	Inspection table X of MIL-PRF-22885		Extent of approval
	Group	Number of samples	1/
M22885/113-1444ED 2/	I II III IV VI VIII	12 4 (from group I) 3/ 4/ 2 (from group I) 2 (from group I) 4 (from group I) 5/ 24 8/	All
M22883/113-3414ED 2/	I II	2 2 (from group I) 13/	
M22885/113-1844ED 2	I VII	2 2 (from group I) 4/ 9/	
M22885/113-1252ED 2/	I II	4 4 (from group I) 4/ 11/	
M22885/113-5344ED 2/	I VII	4 4 (from group I) 4/ 6/ 7/	
M22885/113-5431ED 2/	I II V	6 4 (from group I) 4/ 11/ 2 (from group I)	
M22885/113-7C15ED 2/	I EMC	2 2 (from group I) 12/	
M22885/113-7C61ED 2/	I II III	6 4 (from group I) 4/ 11/ 2 (from group I)	
M22885/113-DM11ED 2/	I EMC	All “M” as described on table VIII	

1/ Includes single break, silver contacts, gold contacts, and wire wrap termination when the basic switches are qualified to MIL-PRF-8805/101 category I or category II.

2/ Lens module configuration shall be "E" for non-NVIS legends and “N” for NVIS legends (3-way split) in accordance with table VI.

Test legend:

DEVICE TEST	
234	567

3/ Shock method I.

4/ During tests requiring switch to be mounted, one-half of the sample units shall be mounted utilizing the mounting spacer in front of the panel, the remainder behind the panel.

5/ Inductive DC Two units, NO-NC only, sea level. Resistive DC: Two units, two circuit only, sea level.

6/ Two units shall be subjected to the mechanical endurance test:

7/ Two units shall be tested for intermediate current.

8/ 24 lens modules, two for each color from type S, shall be tested for color, luminance, NVIS compatibility, and sunlight readability where applicable. A single separate switch body shall be provided to energize lens modules.

9/ Two units shall be tested for Logic Level Circuit only.

10/ Deleted

11/ Sealing shall be verified by performing the watertight test and the splashproof test only.

12/ Electrical environment test in accordance with the test methods described on table XVI.

13/ Solderability and Terminal Strength

14/ All OECs shall function as intended per manufacturing specifications.

TABLE XV. Group A inspection.

Inspection
Seal (when applicable) (external inspection only)
Visual and mechanical examination
Operating characteristics
Dielectric withstanding voltage 2/
Contact resistance 1/

1/ Contact resistance measurements for gold contact switches shall be measured in accordance with switch contact resistance paragraph of MIL-PRF-22885, except the test current shall not exceed 10 milliamperes and the open-circuit test voltage shall not exceed 5.5 volts DC. Contact resistance shall not exceed 210 ohms.

2/ Only for bodies without OECs

TABLE XVI Group B inspection.

Inspection 1/	Test Sample PINs and Sample Part Numbers																		
	22885/8113-544ED								M22885/ 113-5861ED				M22885/ 113-3444ED		M22885/ 113-7C41ED		M22885/ 113-DM11ED		2/
	1	2	3	4	5	6	7	8	9	10	11	12	13	14	15	16	17	18	2/
Visual and Mechanical	X	X	X	X	X	X	X	X	X	X	X	X	X	X	X	X	X	X	
Solderability													X	X					
Shock I	X	X																	
Moisture Resistance	X	X							X	X							X	X	
Salt Spray			X	X															
Overload Cycling					X	X									X	X			
Electrical Endurance Inductive DC															X	X			
Electrical Endurance Resistive DC					X	X													
Mechanical Endurance							X	X											
Logic Level Life																			
Color											X	X							X
Luminance																			X
Sunlight Readability																			X
NVIS Compatibility																			X
Dielectric Withstanding Voltage					X	X									X	X			
Operating Characteristics	X	X	X	X	X	X	X	X	X	X	X	X	X	X	X	X	X	X	
Seal									X	X									
Marking Visibility	X	X	X	X					X	X							X	X	

1/ All tests shall be performed as required by MIL-PRF-22885, Table XII.
2/ Two sample lens cap assemblies of each color for type S.

TABLE XVII Electrical environment requirements of LED lighting circuit and Optional Electronic Components: 1/

Test Description	Test Parameters	Test Method	LED, PT"X/XXX/XXX" ,DL"X/XX/XX/XX" SSR"XX" DP"XX" ER"X" EL"X" VS"XXX/XX/XX" SR429/"XXX/XXXXX[XX]"
Magnetic Effect	1° deflection, 0.0m to 0.3 m	RTCA/DO-160 Section 15 level Z	X
Power Input: 2/	Aircraft Power: (V dc)18 to 32.2 VDC	RTCA/DO-160 Section 16.6.1.1 @30.3 V MIL-STD-704 @22-29 V	X
	Power Interrupt:	RTCA/DO-160 Section 16.6.1.3	3/
	Normal Surge Voltage: 47 Vdc 5 ms, 40 V dc 30 ms, 17 VDC	RTCA/DO-160 Section 16.6.1.4 level A	X
	Engine Start Under voltage; Ramp input voltage from 10 V dc to 28 V dc in 35 seconds	RTCA/DO-160 Section 16.6.1.5 level B	X
	Low Voltage Condition: Decrease power from nominal to 0 V dc over a 10 minute period	RTCA/DO-160 Section 16.6.2.2 level B	X
	Momentary Under Voltage: 12 V dc operation for 7 seconds	RTCA/DO-160 Section 16.6.2.3 level A	X
	Abnormal Surge Voltage 60V 100uS	RTCA/DO-160 Section 16.6.2.4 Level B	X
Power Input	28 VDC System Power and surge	MIL-STD-704	X
Polarity Reversal	Reversal of positive and negative connections	MIL-STD-704 Paragraph 5.4.4	X
Spike 2/	600V, 10us, 50 ohm	RTCA/DO-160 section 17 level A	X
	400V, 5 ohm, 10uS	MIL-STD-461 CS106 Spike 1	X
AC Conducted Susceptibility 2/	Power Input, 4V Max, 0.01-150 KHz	RTCA/DO-160 Section 18 level Z	X
	30 Hz – 150 KHz	MIL-STD-461 CS101 Curve 1	X
Induced Signal Susceptibility	Magnetic and Electric induced fields. 340 Hz to 800 Hz	RTCA/DO-160 Section 19 level CW	X
RF Conducted Susceptibility	300mA, 10KHz-400MHz, CW, SW	RTCA/DO-160 section 20 Level Y	X
	10 KHz – 200 MHz, 109 dB uA, CW, SW	MIL-STD-461 CS114 Curve 5	X

TABLE XVII Electrical environment requirements of LED lighting circuit and Optional Electronic Components: 1/. continued

Test Description	Test Parameters	Test Method	LED, PT"X/XXX/XXX", DL"X/XX/XX/XX", SSR"XX" DP"XX", ER"X", EL"X", VS"XXX/XX/XX", SR429/"XXX/XXXXX[XX]"
RF Radiated Susceptibility	100 MHz – 18 GHz, CW, SW	RTCA/DO-160 Section 20	Level Y 200V/M
	2 MHz – 18 GHz, CW, SW	MIL-STD-461 RS103	200 V/M
RF Conducted Emissions	150 KHz – 152 MHz	RTCA/DO-160 Section 21 Level P	X
	10 KHz – 10 MHz	MIL-STD-461 CE102	X
RF Radiated Emissions	150 KHz to 6 GHz	RTCA/DO-160 Section 21 Level P	X
	10 KHz TO 6 GHz	MIL-STD-461 RE102	X
Military Transient	5 amp, 30 ns	MIL-STD-461 CS115	X
	10KHz, 100KHz, 1MHz, 10MHz, 30MHz, 100MHz	MIL-STD-461 CS116	X
Lightning Induced Transient	Waveform 5A, 300V, 120us.	RTCA/DO-160 Section 22 B3K3L3	X
	Waveform 3, 600V, 1 MHz, 10Mhz	RTCA/DO-160 Section 22 Category B3K3L3	X
Dielectric Withstanding	1000 VAC	MIL-STD-202-301	X
Electrostatic Discharge	15,000V, 150pf, 330 ohms	RTCA/DO-160 Section 25	X

1/ EMC testing is not applicable to Mechanical switches and Terminal Blocks
2/ For 5VDC CAPS and SSR "XX" scaled to the appropriate voltage test level
3/ For SSR "XX" not applicable. For EL"X" and VS"XXX/XX/XX" level B 50ms, for all other OEC and LED Level A 200ms

Changes from previous issues: The margins of this specification are marked with vertical lines to indicate where modifications from this amendment were made. This was done as a convenience only and the Government assumes no liability whatsoever for any inaccuracies in these notations. Bidders and contractors are cautioned to evaluate the requirements of this document based on the entire content irrespective of the marginal notations.

Referenced Documents

MIL-PRF-8805	MIL-PRF-8805/101	MIL-PRF-22885	MIL-PRF-22885/108	MS27488
MIL-STD-108	MIL-STD-202-213	MIL-STD-202-301	RTCA/DO-160	QPL-22885
MIL-STD-461	MIL-STD-704	MIL-STD-3009	SAE-AS81969/14	QPL-8805
MIL-DTL-7788	SAE-AS81714	MIL-L-85762	SAE-AS39029/22	

Custodians:
Army - CR
Navy - EC
Air Force -85
DLA – CC

Preparing activity:
DLA - CC

(Project 5930-2024-067)

NOTE: The activities listed above were interested in this document as of the date of this document. Since organizations and responsibilities can change, you should verify the currency of the information above using the ASSIST Online database at https://assist.dla.mil/ .