INCH POUND
MIL-PRF-22885/108L
8 July 2026

SUPERSEDING
MIL-PRF-22885/108K
20 August 2024

PERFORMANCE SPECIFICATION SHEET

SWITCHES, PUSHBUTTON, ILLUMINATED, 4-LAMP REPLACEABLE INCANDESCENT OR NON-REPLACEABLE LIGHT EMITTING DIODE (LED), 0.750 SQUARE, SPDT, DPDT, 4PDT SILVER CONTACTS - 2 CIRCUIT (5 AMPERES) OR SPDT (7.5 AMPERES); GOLD CONTACTS - LOW LEVEL TO 1 AMPERE, OPTIONAL ELECTRONIC COMPONENTS, SUNLIGHT READABLE DISPLAY (DRIPPROOF, WATERTIGHT, SPLASHPROOF, EMI/RFI SHIELDING, HIGH IMPACT SHOCK RESISTANT, COMMON TERMINATION SYSTEM, NIGHT VISION GOGGLE COMPATIBLE)

This specification is approved for use by all Departments and Agencies of the Department of Defense.

The requirements for acquiring the push buttons described herein shall consist of this specification and MIL-PRF-22885.

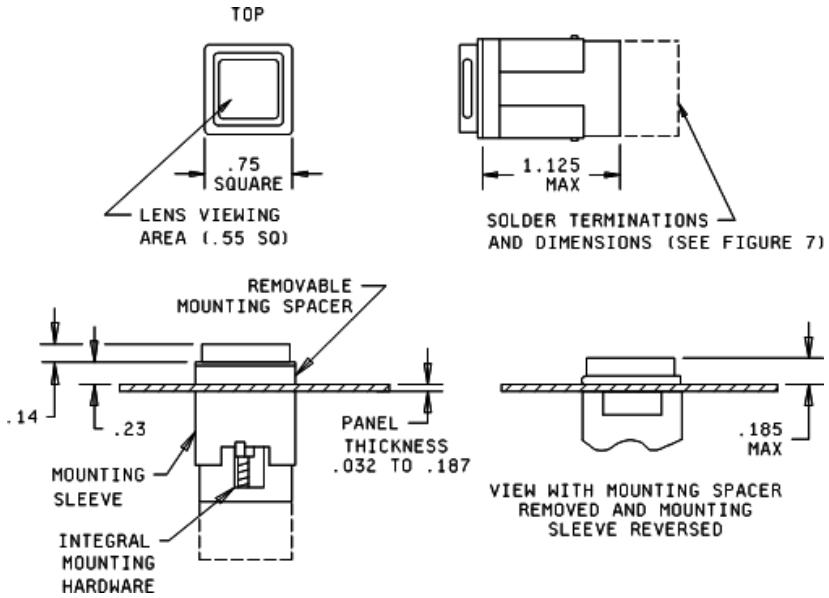

NOTES:
1. Dimensions are in inches.
2. Unless otherwise specified, tolerances are ±.010 for three place decimals and ±.03 for two place decimals.
3. The mounting sleeve shall not exceed .760 square and shall be reversible so as to be usable with or without the mounting spacer. In either case, the switch shall accommodate mounting to panels from .032 to .187 thick.
4. A mounting spacer is supplied with each switch unit for panel requirements and places the mounting flange flush with the top of a .235 thick edge lighted panel.
5. Spacer is to be used only for edge lighted panels, discard otherwise.
6. Pushbutton cap shall be designed to prevent incorrect insertion into switch housing.
7. Pushbutton cap shall be held captive to switch body by retaining element to prevent accidental interchange, but shall allow replacement of the lamps.
8. Exact shape of switch is optional, provided dimensions specified are not exceeded.
9. Terminals and basic switch identification shall be permanently marked as shown on figures 7 and 9.

FIGURE 1. Switch - type I, 2 pole (enclosure design 1, unsealed with solder terminals).

AMSC N/A
FSC 5930
DISTRIBUTION STATEMENT A. Approved for public release. Distribution is unlimited.

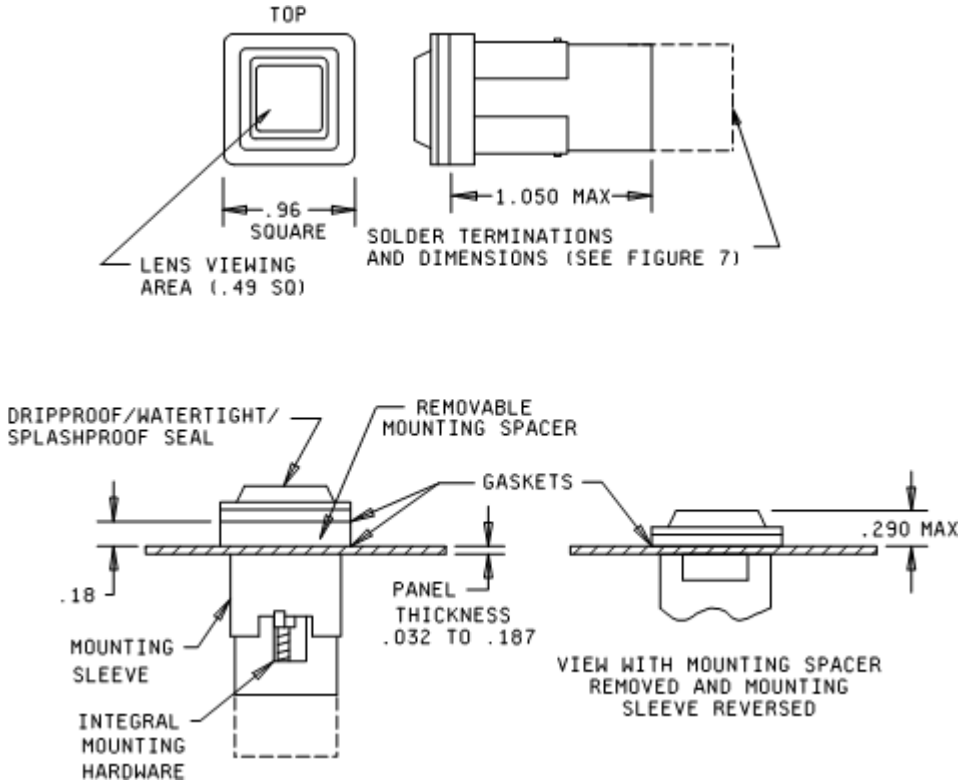

NOTES:

1. Dimensions are in inches.
2. Unless otherwise specified, tolerances are ±.010 for three place decimals and ±.03 for two place decimals.
3. The mounting sleeve shall not exceed .760 square and shall be reversible so as to be usable with or without the mounting spacer. In either case, the switch shall accommodate mounting to panels from .032 to .187 thick.
4. A mounting spacer is supplied with each switch unit for panel requirements and places the mounting flange flush with the top of a .235 thick edge lighted panel.
5. Spacer is to be used only for edge lighted panels, discard otherwise.
6. Pushbutton cap shall be designed to prevent incorrect insertion into switch housing.
7. Pushbutton cap shall be held captive to switch body by retaining element to prevent accidental interchange, but shall allow replacement of the lamps.
8. Exact shape of switch is optional, provided dimensions specified are not exceeded.
9. Terminals and basic switch identification shall be permanently marked as shown on figures 7 and 9.

FIGURE 2. Switch - type II, 2 pole (enclosure design 2, 3, and 4; dripproof, watertight, and splashproof with solder terminals).

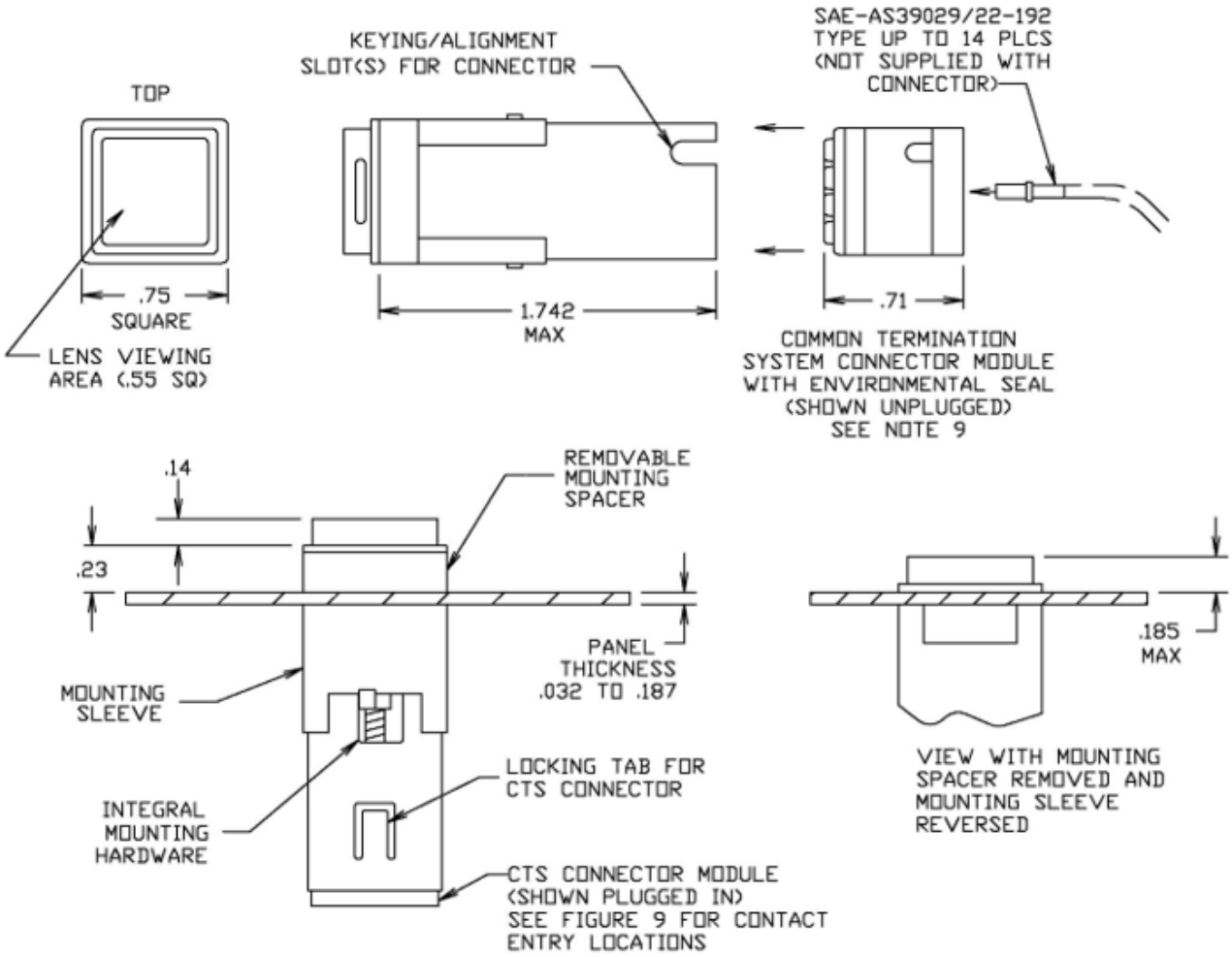

FIGURE 3. Switch - type III (enclosure design 1, unsealed with 2 pole or compact body common termination system).

NOTES:

1. Dimensions are in inches.
2. Unless otherwise specified, tolerances are ±.010 for three place decimals and ±.03 for two place decimals.
3. The mounting sleeve shall not exceed .760 square and shall be reversible so as to be usable with or without the mounting spacer. In either case, the switch shall accommodate mounting to panels from .032 to .187 thick.
4. A mounting spacer is supplied with each switch unit for panel requirements and places the mounting flange flush with the top of a .235 thick edge lighted panel.
5. Spacer is to be used only for edge lighted panels, discard otherwise.
6. Pushbutton cap shall be designed to prevent incorrect insertion into switch housing.
7. Pushbutton cap shall be held captive to switch body by retaining element to prevent accidental interchange, but shall allow replacement of the lamps.
8. The Common Termination System (CTS) connector shall be designed and constructed to meet the performance requirements of this document. These items, M22885/10818200 for 2 pole switches and M22885/10818442 for 2 pole switches with Optional electronic components, shall be acquired from a source listed on QPL 22885.
9. The CTS connector shall be removable from the switch housing to allow the housing to be mounted separately. The connector may be wired during harnessing operations, allowing bench testing without the need of the switch housing.
10. The CTS connector shall be considered as a connector plug that may be separated from the switch housing for the convenience of installation.
11. The CTS connector shall be removable from the switch body by use of a M22885/108T8234 CTS module extraction tool (see figure 10). This item shall be acquired from a source listed on QPL 22885.
12. The CTS connector shall be capable of receiving SAE-AS39029/22 -192 (per SAE-AS39029/22) socket contacts crimped to a 20, 22, or 24 gauge wire.
13. The CTS connector shall be capable of having the socket contacts inserted or removed using an M81969/14-10, per SAE-AS81969, contact insertion/removal tool.
14. Exact shape of switch is optional provided dimensions specified are not exceeded.
15. Terminals and basic switch identification shall be permanently marked as shown on figures 7 and 9.

FIGURE 3. Switch - type III (enclosure design 1, unsealed with 2 pole or compact body with common termination system) - Continued.

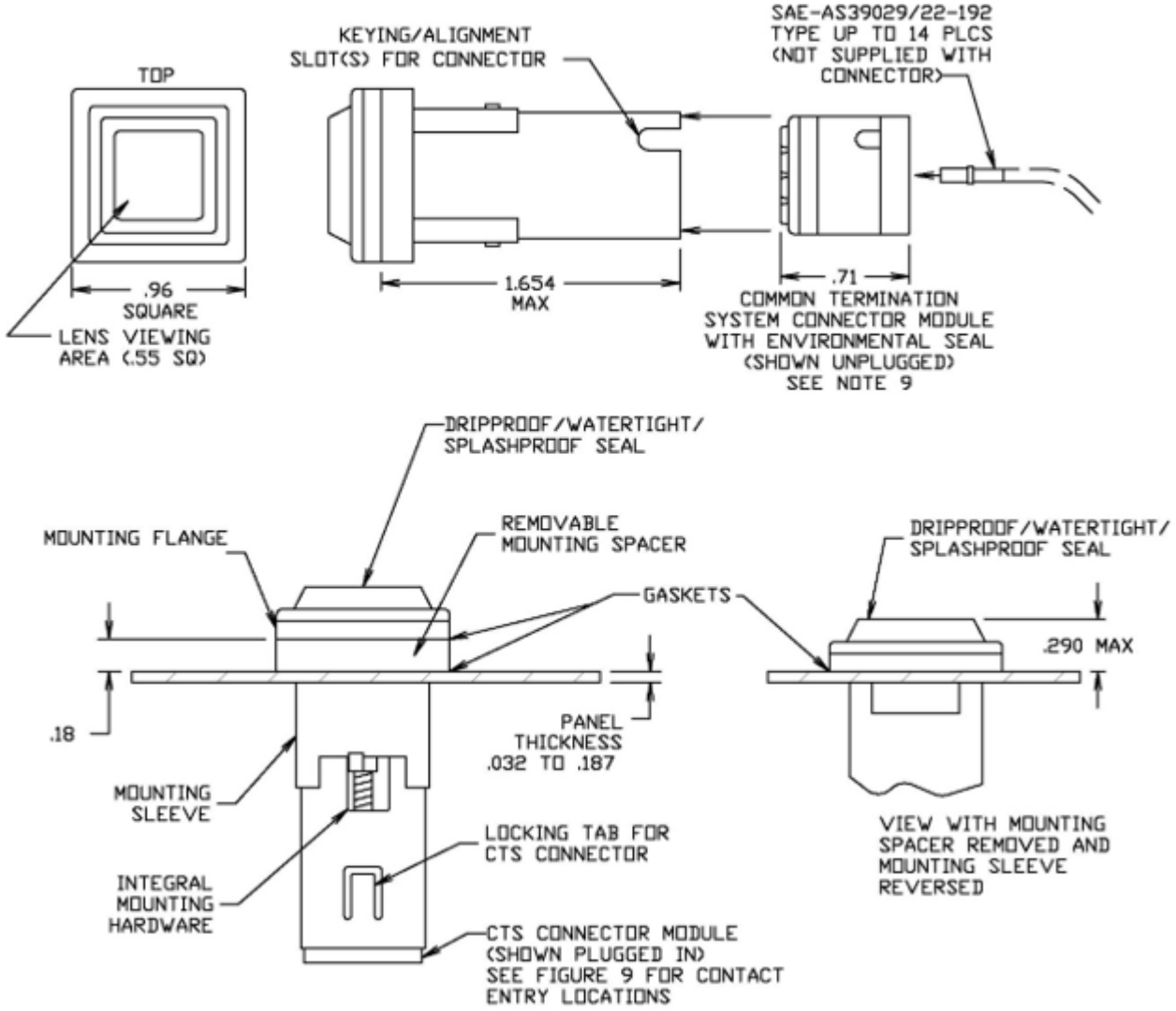

FIGURE 4. Switch - type IV (enclosure design 2, 3, and 4; dripproof, watertight, and splashproof with 2 pole or compact body with common termination system).

NOTES:

1. Dimensions are in inches.
2. Unless otherwise specified, tolerances are ±.010 for three place decimals and ±.03 for two place decimals.
3. The mounting sleeve shall not exceed .760 square and shall be reversible so as to be usable with or without the mounting spacer. In either case, the switch shall accommodate mounting to panels from .032 to .187 thick.
4. A mounting spacer is supplied with each switch unit for panel requirements and places the mounting flange flush with the top of a .235 thick edge lighted panel.
5. Spacer is to be used only for edge lighted panels, discard otherwise.
6. Pushbutton cap shall be designed to prevent incorrect insertion into switch housing.
7. Pushbutton cap shall be held captive to switch body by retaining element to prevent accidental interchange, but shall allow replacement of the lamps.
8. The Common Termination System (CTS) connector shall be designed and constructed to meet the performance requirements of this document. These items, M22885/10818200 for 2 pole switches and M22885/10818442 for 2 pole switches with Optional electronic components, shall be acquired from a source listed on QPL 22885.
9. The CTS connector shall be removable from the switch housing to allow the housing to be mounted separately. The connector may be wired during harnessing operations, allowing bench testing without the need of the switch housing.
10. The CTS connector shall be considered as a connector plug that may be separated from the switch housing for the convenience of installation.
11. The CTS connector shall be removable from the switch body by use of a M22885/108T8234 CTS module extraction tool (see figure 10). This item shall be acquired from a source listed on QPL 22885.
12. The CTS connector shall be capable of receiving SAE-AS39029/22-192 (per SAE-AS39029/22) socket contacts crimped to a 20, 22, or 24 gauge wire.
13. The CTS connector shall be capable of having the socket contacts inserted or removed using an M81969/14-10, per SAE-AS81969, contact insertion/removal tool.
14. Exact shape of switch is optional provided dimensions specified are not exceeded.
15. Terminals and basic switch identification shall be permanently marked as shown on figures 7 and 9.

FIGURE 4. Switch - type IV (enclosure design 2, 3, and 4; dripproof, watertight, and splashproof with 2 pole or compact body with common termination system) - Continued.

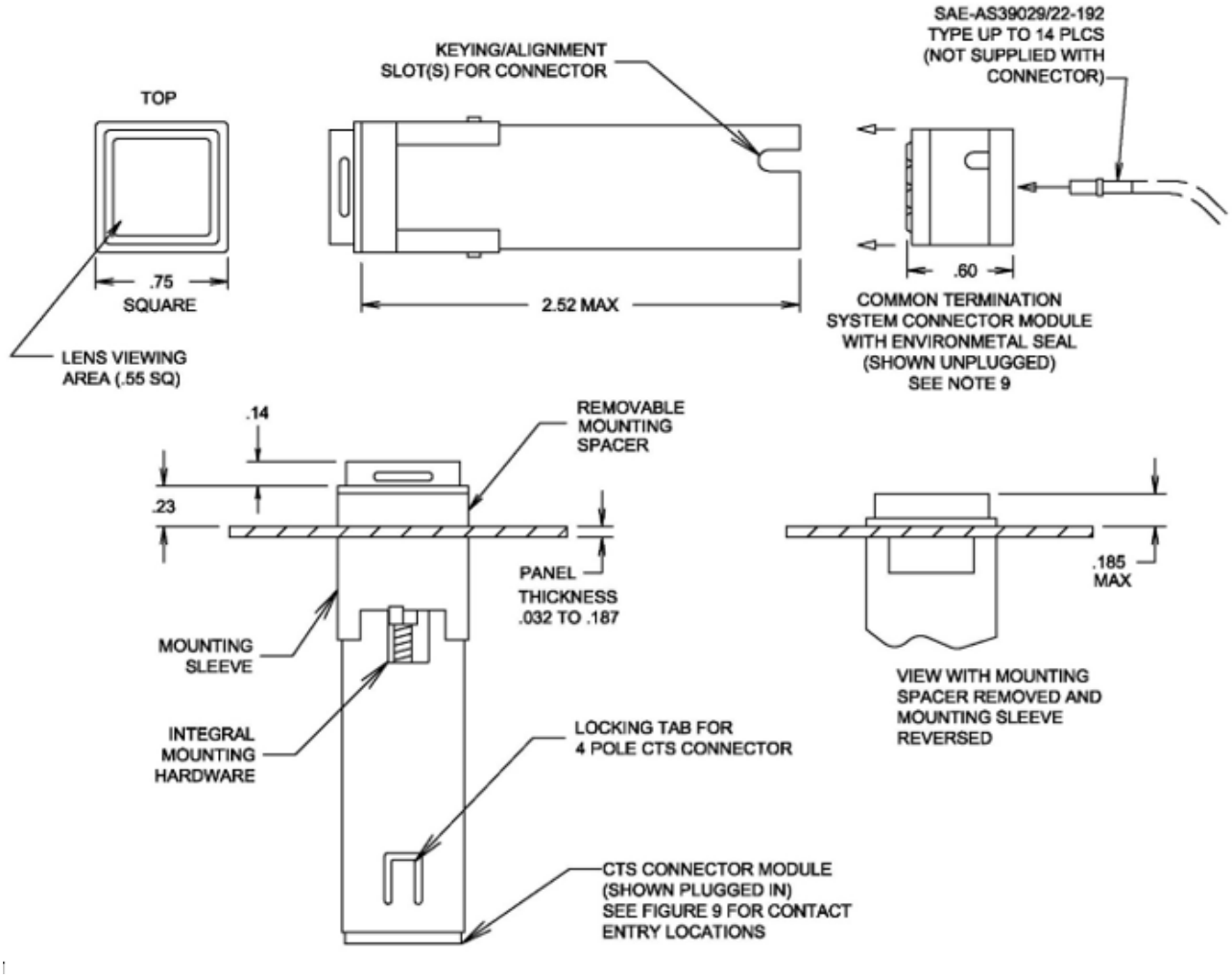

FIGURE 5. Switch - type V (enclosure design 1: unsealed with 4 pole or high capacity body with common termination system).

NOTES:

1. Dimensions are in inches.
2. Unless otherwise specified, tolerances are ±.010 for three place decimals and ±.03 for two place decimals.
3. The mounting sleeve shall not exceed .760 square and shall be reversible so as to be usable with or without the mounting spacer. In either case, the switch shall accommodate mounting to panels from .032 to .187 thick.
4. A mounting spacer is supplied with each switch unit for panel requirements and places the mounting flange flush with the top of a .235 thick edge lighted panel.
5. Spacer is to be used only for edge lighted panels, discard otherwise.
6. Pushbutton cap shall be designed to prevent incorrect insertion into switch housing.
7. Pushbutton cap shall be held captive to switch body by retaining element to prevent accidental interchange, but shall allow replacement of the lamps.
8. The Common Termination System (CTS) connector shall be designed and constructed to meet the performance requirements of this document. These items, M22885/108C8240 for 4 pole switches and M22885/10818440 for 4 pole switches with Optional electronic components, shall be acquired from a source listed on QPL 22885.
9. The CTS connector shall be removable from the switch housing to allow the housing to be mounted separately. The connector may be wired during harnessing operations, allowing bench testing without the need of the switch housing.
10. The CTS connector shall be considered as a connector plug that may be separated from the switch housing for the convenience of installation.
11. The CTS connector shall be removable from the switch body by use of a M22885/108T8234 CTS module extraction tool (see figure 10). This item shall be acquired from a source listed on QPL 22885.
12. The CTS connector shall be capable of receiving SAE-AS39029/22-192 (per SAE-AS39029/22) socket contacts crimped to a 20, 22, or 24 gauge wire.
13. The CTS connector shall be capable of having the socket contacts inserted or removed using an M81969/14-10, per SAE-AS81969, contact insertion/removal tool.
14. Exact shape of switch is optional provided dimensions specified are not exceeded.
15. Terminals and basic switch identification shall be permanently marked as shown on figures 7 and 9.

FIGURE 5. Switch - type V (enclosure design 1: unsealed with 4 pole or high capacity body with common termination system) - Continued.

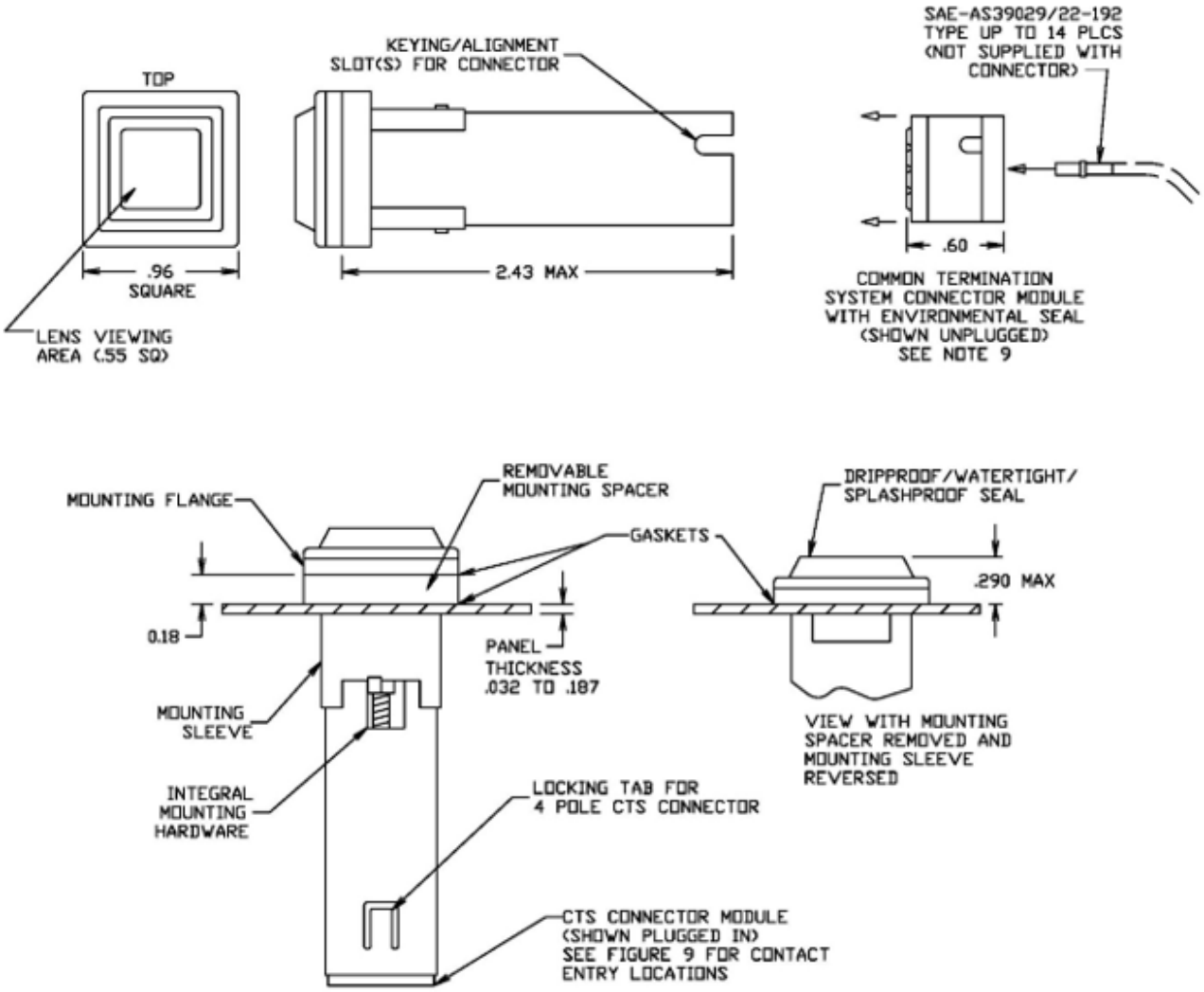

FIGURE 6. Switch- type VI (enclosure design 2, 3, and 4: dripproof, watertight, and splashproof with 4 pole or high capacity body with common termination system).

NOTES:

1. Dimensions are in inches.
2. Unless otherwise specified, tolerances are ±.010 for three place decimals and ±.03 for two place decimals.
3. The mounting sleeve shall not exceed .760 square and shall be reversible so as to be usable with or without the mounting spacer. In either case, the switch shall accommodate mounting to panels from .032 to .187 thick.
4. A mounting spacer is supplied with each switch unit for panel requirements and places the mounting flange flush with the top of a .235 thick edge lighted panel.
5. Spacer is to be used only for edge lighted panels, discard otherwise.
6. Pushbutton cap shall be designed to prevent incorrect insertion into switch housing.
7. Pushbutton cap shall be held captive to switch body by retaining element to prevent accidental interchange, but shall allow replacement of the lamps.
8. The Common Termination System (CTS) connector shall be designed and constructed to meet the performance requirements of this document. These items, M22885/108C8240 for 4 pole switches and M22885/10818440 for 4 pole switches with Optional electronic components, shall be acquired from a source listed on QPL 22885.
9. The CTS connector shall be removable from the switch housing to allow the housing to be mounted separately. The connector may be wired during harnessing operations, allowing bench testing without the need of the switch housing.
10. The CTS connector shall be considered as a connector plug that may be separated from the switch housing for the convenience of installation.
11. The CTS connector shall be removable from the switch body by use of a M22885/108T8234 CTS module extraction tool (see figure 10). This item shall be acquired from a source listed on QPL 22885.
12. The CTS connector shall be capable of receiving SAE-AS39029/22-192 (per SAE-AS39029/22) socket contacts crimped to a 20, 22, or 24 gauge wire.
13. The CTS connector shall be capable of having the socket contacts inserted or removed using an M81969/14-10, per SAE-AS81969, contact insertion/removal tool.
14. Exact shape of switch is optional provided dimensions specified are not exceeded.
15. Terminals and basic switch identification shall be permanently marked as shown on figures 7 and 9.

FIGURE 6. Switch - type VI (enclosure design 2, 3, and 4; dripproof, watertight, and splashproof with 4 pole or high capacity body with common termination system) - Continued.

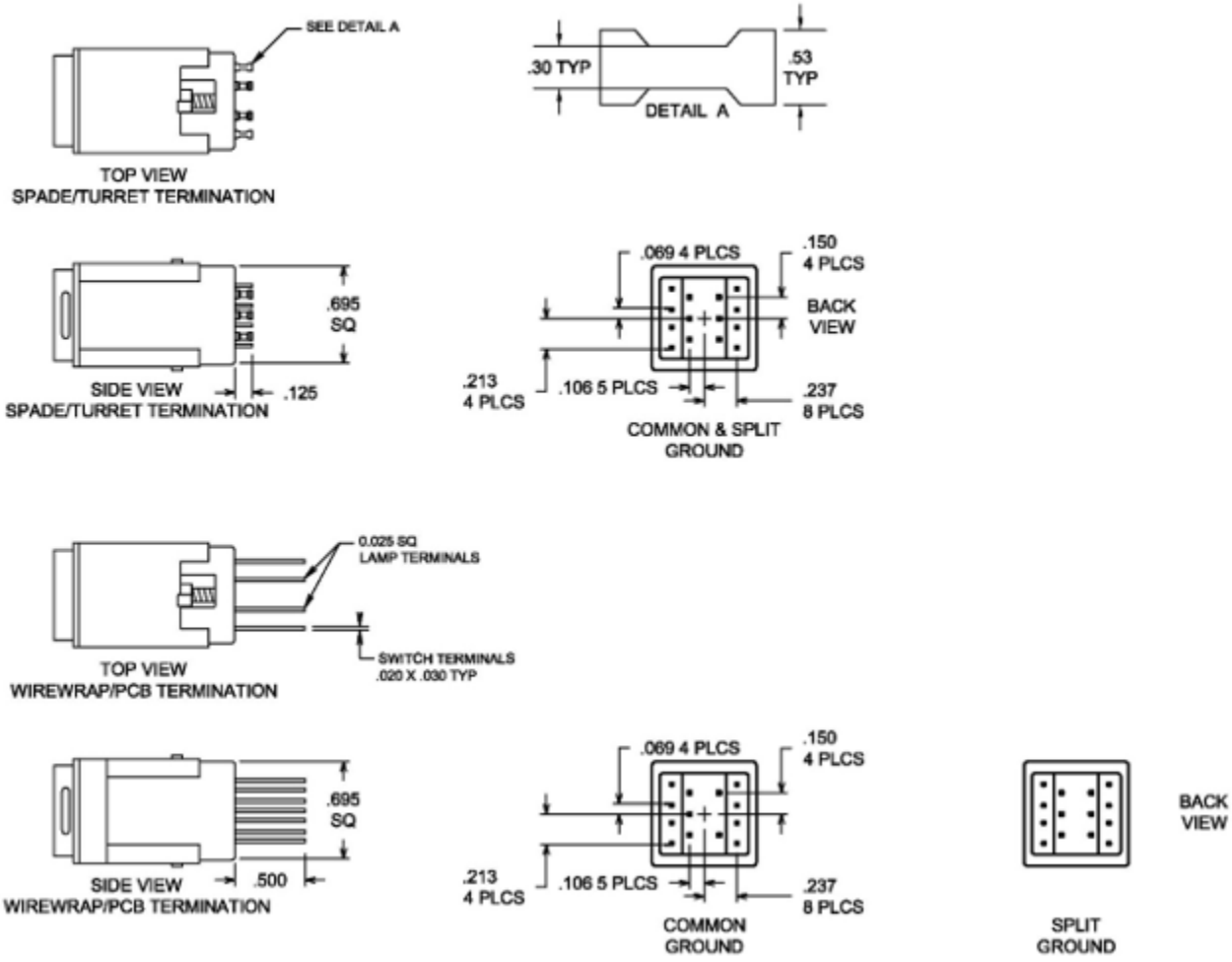

FIGURE 7. Switch and lamp terminations - dimensions and center location.

COMMON TERMINATION SYSTEM

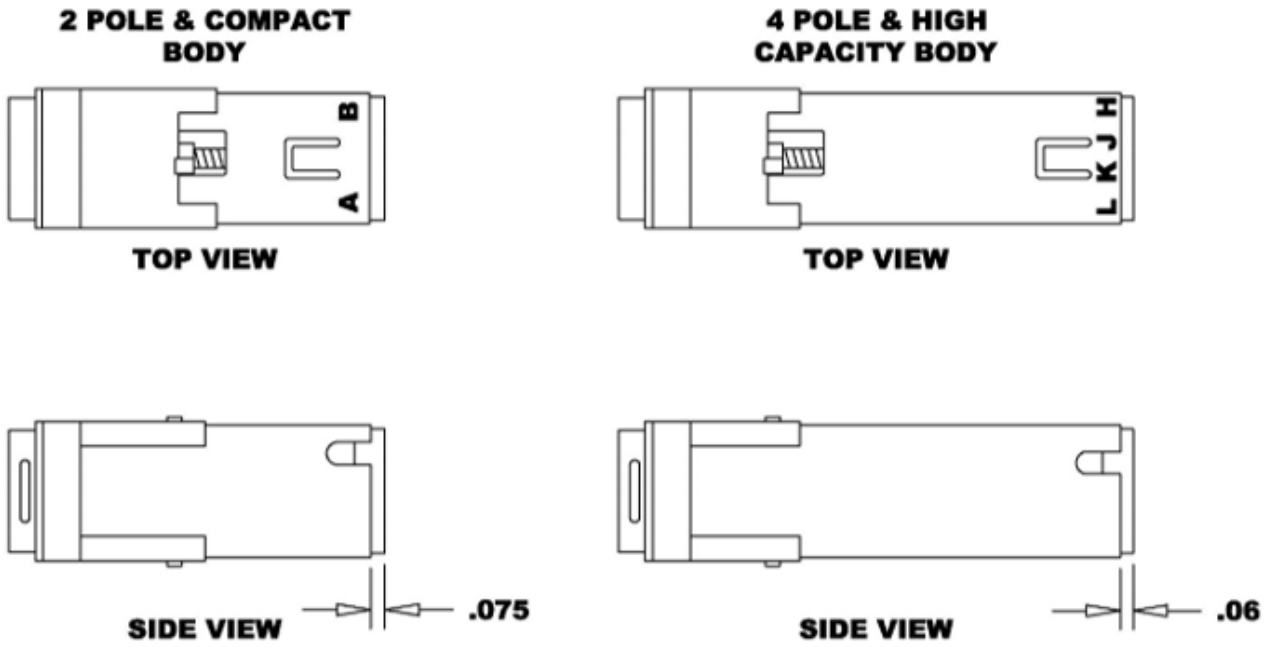

NOTES:
1. Dimensions are in inches.
2. Unless otherwise specified, tolerances are ±.010 for three place decimals and ±.03 for two place decimals.

FIGURE 7. Switch and lamp terminations - dimensions and center location - Continued.

INCANDESCET LAMP CIRCUIT SCHEMATIC

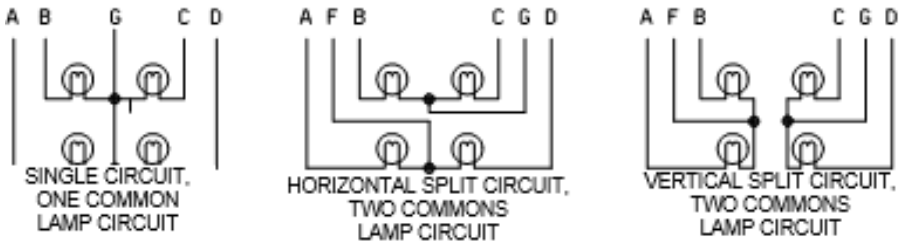

SWITCH CIRCUIT CONFIGURATIONS
Terminal position as viewed from front of the display.
Any switch position can be replaced with a suitable optional electronic component

SWITCH CIRCUIT SCHEMATIC

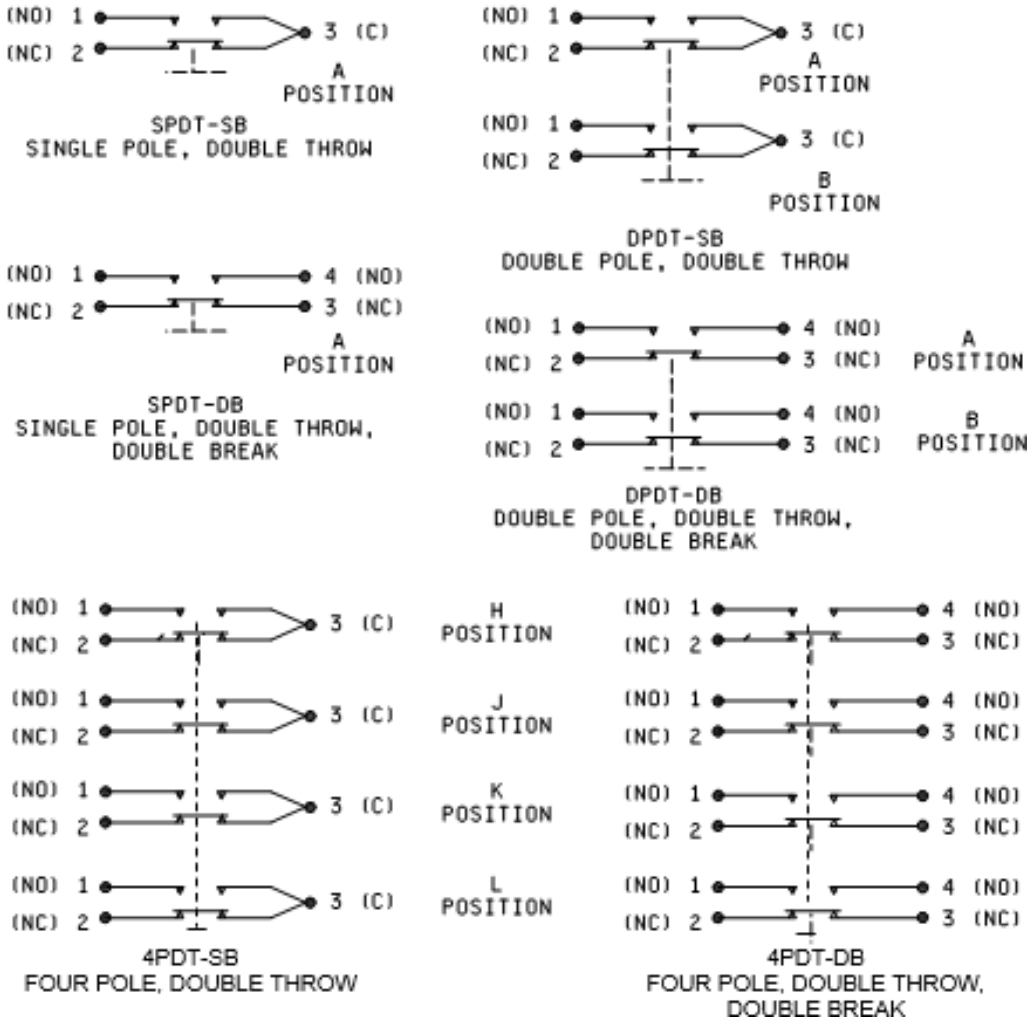

FIGURE 8. Incandescent lamp circuit schematic, switch circuit configurations, and recommended panel cutouts.

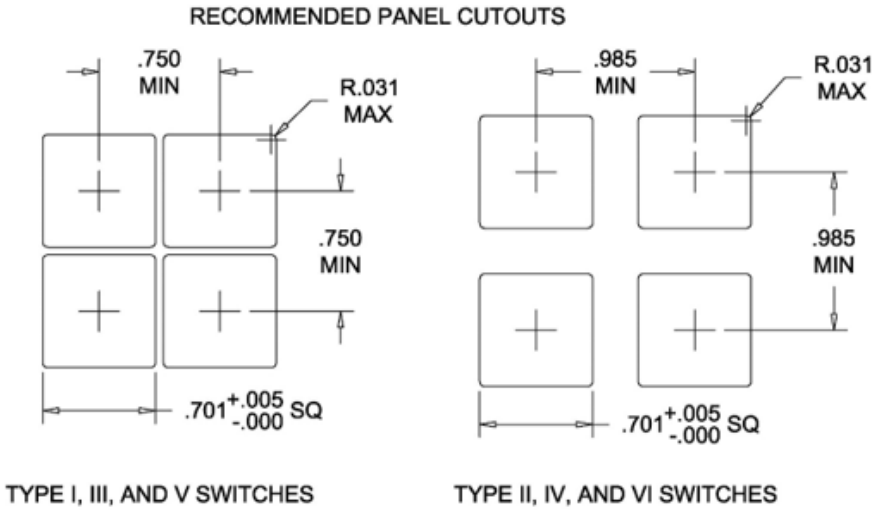

NOTES:
1. Dimensions are in inches.
2. Panel cutout spacing applicable for installation without optional switch guard..

FIGURE 8. Incandescent lamp circuit schematic, switch circuit configurations, and recommended panel cutouts - Continued.

Common Ground – Wire wrap / PCB termination (Type I and Type II)

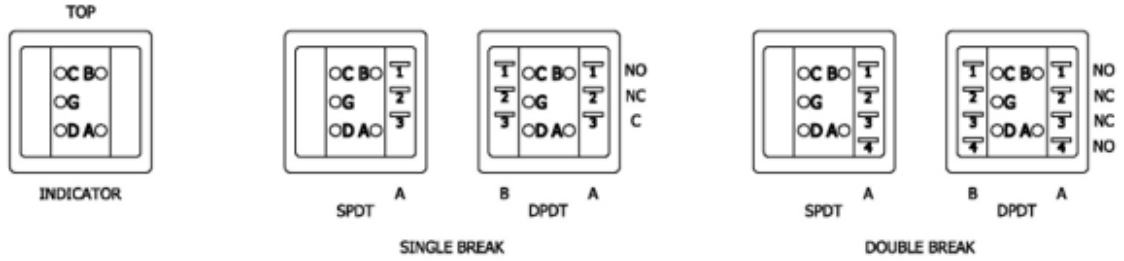

Split-Ground – Wire-wrap / PCB termination. Common-and-Split-Ground - Spade / Turret-termination (Type I-and-Type II)¶

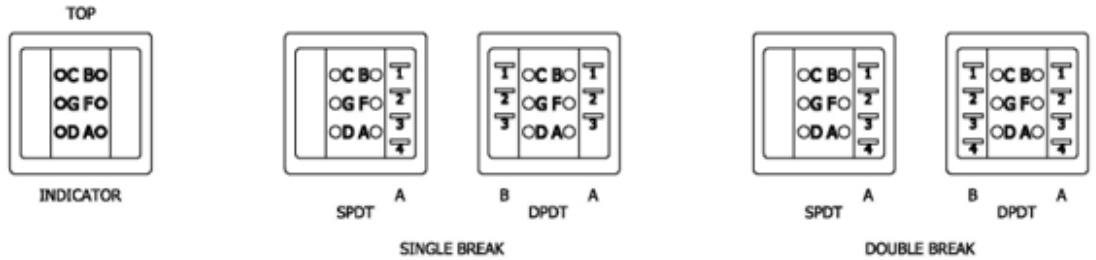

FIGURE 9. Switch poles, lamp terminal arrangements and Common Termination System (CTS) identification.

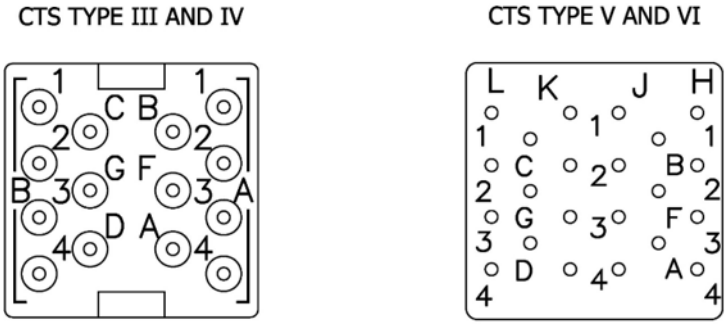

NOTES:

1. All Type III and IV switches have identical switch and lamp terminal arrangement identification. All Type V and VI switches have identical switch and lamp terminal arrangement identification.
2. To make the various CTS combinations, an MS27488-20 sealing plug may be placed in the unused locations.
3. A and B or H, J, K,and L identify each switch pole or optional electronic component locations. 1, 2, 3, and 4 identify the switch or optional electronic component units contact termination
4. A, C, B, G, F, D identify the cap circuit terminations.

FIGURE 9 Switch poles, lamp terminal arrangements and Common Termination System (CTS) identification. Continuation.

2 POLE CTS MODULE
(M22885/10818200) FOR TYPE III AND IV SWITCHES
(M22885/108-18442) FOR TYPE III AND IV SWITCHES WITH OPTIONAL LOGIC COMPONENTS

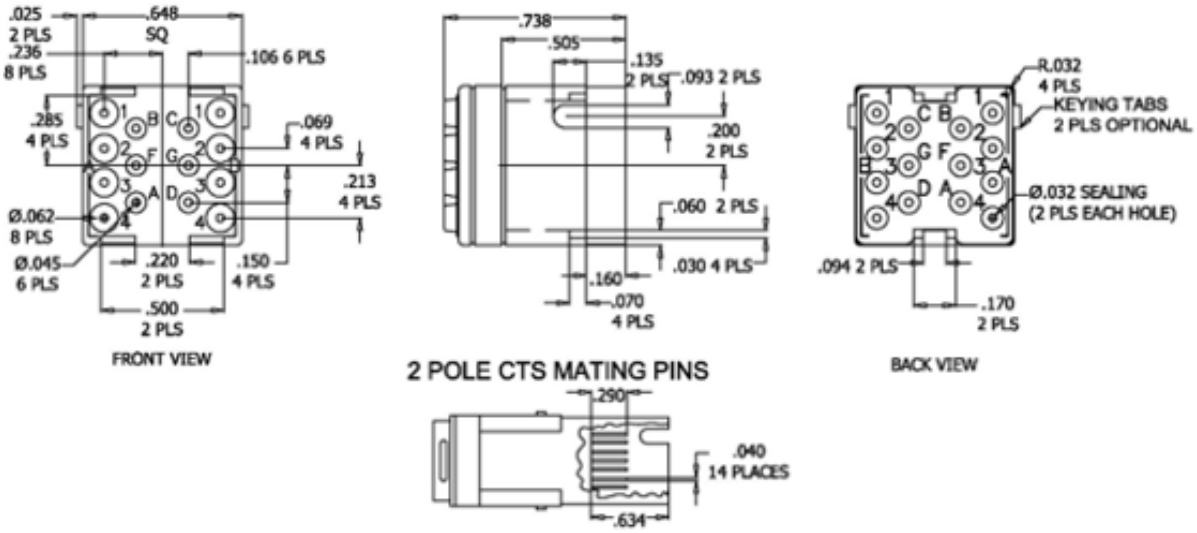

Note: (M22885/108-18442) HAS ONE KEYING TAB, (M22885/108-18200) HAS TWO KEYING TABS

FIGURE 10. CTS modules and extraction tools.

4 POLE CTS MODULE
(M22885/108-C8240) FOR TYPE VI AND VI SWITCHES
(M22885 /108-18440) FOR TYPE V AND VI SWITCHES WITH OPTIONAL LOGIC COMPONENTS

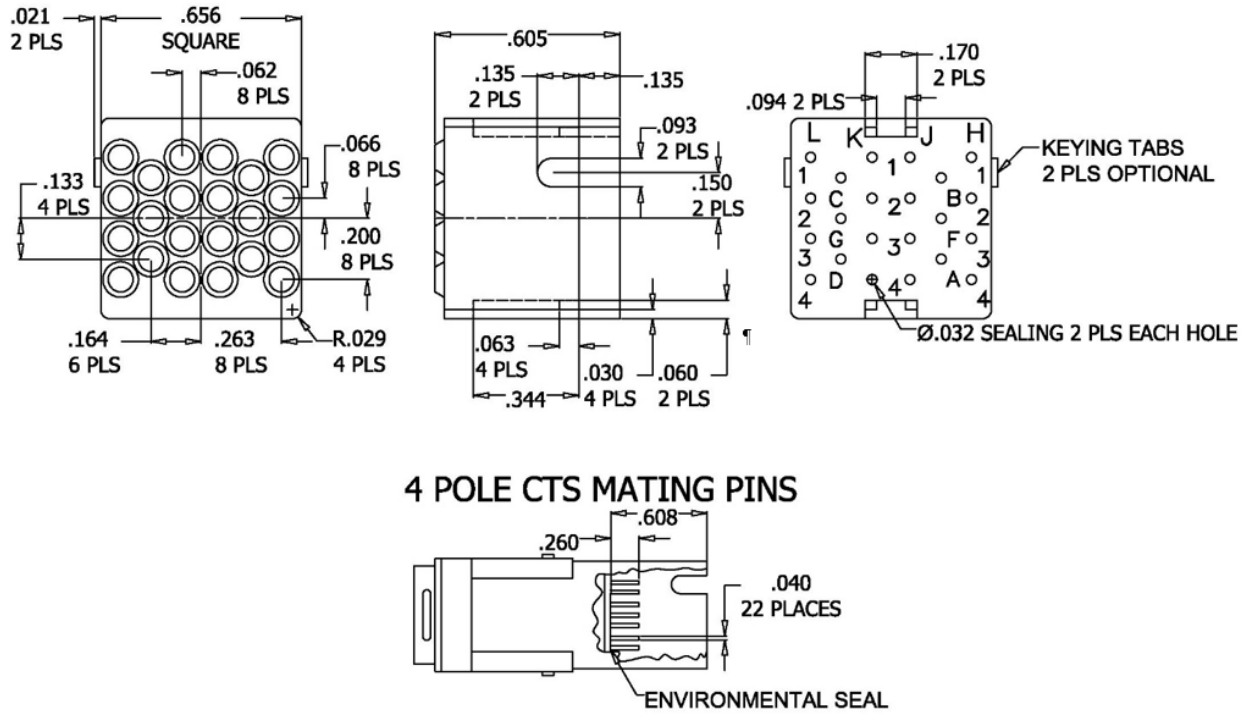

Note: (M22885/108-18440) HAS ONE KEYING TAB, (M22885/108-C8240) HAS TWO KEYING TABS

FIGURE 10. CTS modules and extraction tools - Continued.

CTS MODULE EXTRACTION TOOL (M22885/108-T8234)

PART NUMBER M22885/108-18208 HAS BEEN CANCELED AND REPLACED WITH M22885/108-T8234

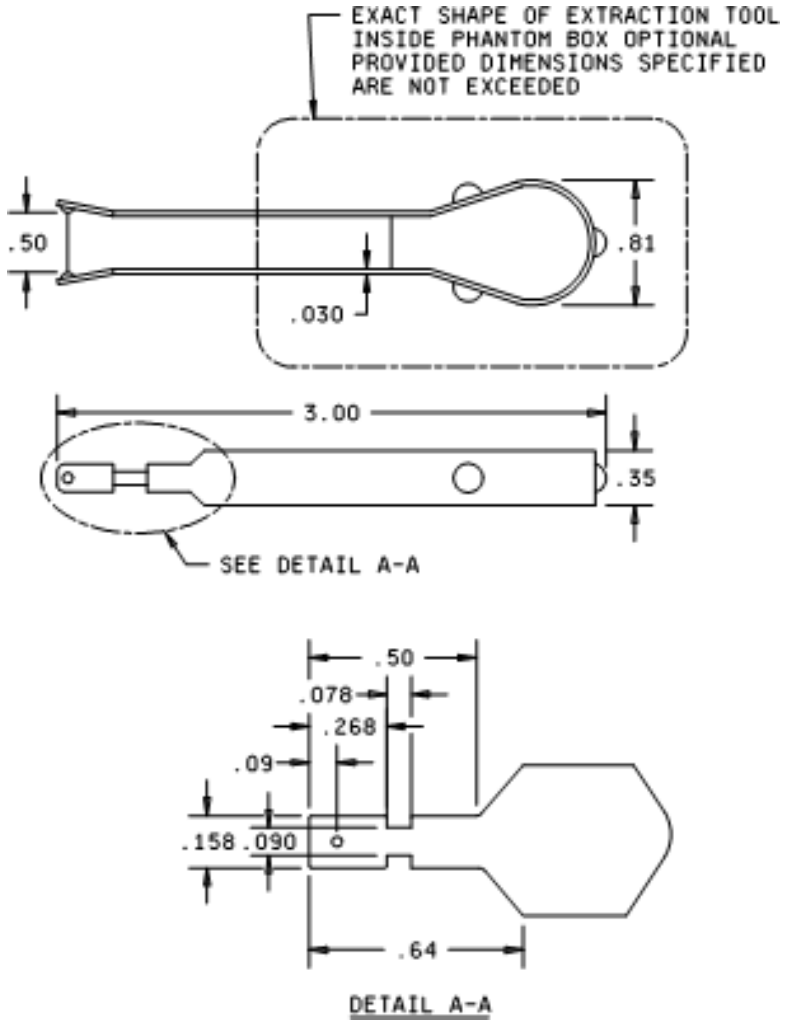

NOTES:
1. Dimensions are in inches.
2. Above dimensions are shown for information only.

FIGURE 10. CTS modules and extraction tools - Continued.

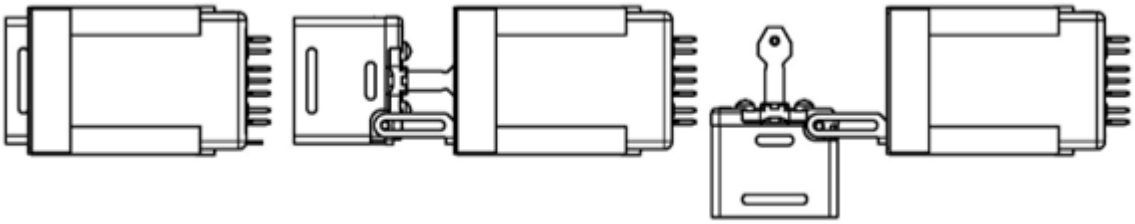

NOTES:
1. Retaining element shall be permanently attached to switch housing.
2. Retaining element shall allow pushbutton cap to be pulled fully out of switch housing and dropped down 90 degrees to facilitate lamp replacement. (Pushbutton cap must still be retained.)
3. Pushbutton cap shall be removable from the retaining element to allow caps to be changed if necessary.

FIGURE 11. Pushbutton cap retaining element.

REQUIREMENTS:

Design and construction: See figures 1 through 11.

Complete switch shall consist of:

One switch body, including a reversible mounting sleeve, a panel mounting spacer, and an integral cap retaining element. Type II, IV and VI switch bodies also include a splashproof mounting flange. When specified, type III, IV, V, and VI switch bodies also include an environmentally sealed plug-on connector, common termination system (CTS,) designed in accordance with the Terminal Junction System (TJS) of SAE-AS81714. When specified, type III, IV, V, and VI switch bodies may also include optional electronic components.

One lens module pushbutton cap: Includes legend module configuration, lamp circuit type, night vision goggle compatibility when specified, EMI/RFI shielding efficiency when specified, and an integral dripproof, watertight, and splashproof seal when specified.

Option 1: Four lamps: T-1 flange base incandescent lamps.

Option 2: LED lens module pushbutton cap: When specified, the legend module configuration includes non-replaceable LED lamps, LED circuit assembly with LED driver, dimming and electrical protection circuitry(blocking diode), press-to-test circuitry when specified, night vision goggle compatibility when specified, EMI/RFI shielding efficiency when specified, and an integral dripproof, watertight and splashproof seal when specified.

Material:

Housing:

Type I and type II: Aluminum alloy, anodized black.

Type III, type IV, type V and type VI: Corrosion-resistant steel.

Mounting sleeve: Corrosion resistant steel or aluminum alloy. Aluminum alloy is surface treated in accordance with MIL-STD-171.

Panel mounting spacer: Corrosion resistant steel, black, or thermoplastic, black for type I, type III, and type V. Thermoplastic, black, for type II, type IV, and type VI.

Front lens material: High temperature heat-resistant thermoplastic.

Enclosure design:

Symbol 1 (unsealed) for type I, type III, and type V.

Symbol 2 (dripproof) for type II, type IV, and type VI.

Symbol 3 (watertight) for type II, type IV, and type VI.

Symbol 4 (splashproof) for type II, type IV, and type VI.

Temperature characteristic: (-55°C to +85°C for all types).

Moisture Resistance : MIL-STD-810 Method 507 Procedure II

Vibration grade: 3 (10 to 2,000 Hz).

Operating characteristics:

Actuation force: 2 to 5 pounds.

Actuation travel: 0.150 ±0.030 inch, except 0.100 ±0.030 inch for high impact shock units.

Lens module extraction force: 2 to 5 pounds, except 2 to 8 pounds for high impact shock units.

Strength of actuator: 25 pounds.

Sand and dust: Applicable to type II, type IV, and type VI.

Shock: 75 g (MIL-STD-202-213, test condition B).

High impact shock: MIL-STD-202-207, when specified. Applicable to indicator and momentary action type II, type IV, and type VI only.

Weight:

Connector (CTS): 6 grams maximum.

4 pole connector (CTS): 6 grams maximum.

Type I (solder terminations): 19 grams maximum.

Type II (solder terminations): 21 grams maximum.

Type III (CTS): 26 grams maximum.

Type IV (CTS): 28 grams maximum.

Type V (4 pole CTS): 38 grams maximum.

Type VI (4 pole CTS): 41 grams maximum.

Seal:

Watertight test: When specified, test in accordance with MIL-PRF-22885 and MIL-STD-108. There shall be no leakage of water through the panel and pushbutton seals as determined by visual examination and the dielectric withstanding voltage test.

Splashproof test: When specified, test in accordance with MIL-PRF-22885 and MIL-STD-108. There shall be no leakage of water through the panel and pushbutton seals as determined by visual examination and the dielectric withstanding voltage test.

Mechanical endurance: 100,000 cycles.

10,000 cycles of operation at -55°C ±2°C, 20,000 cycles of operation at +85°C ±2°C, and 70,000 cycles of operation at room temperature.

Cycling rate shall not exceed 18 cycles per minute during low temperature portion of the mechanical endurance test.

Electrical endurance: 50,000 cycles.

Intermediate current: Applicable, 50,000 cycles.

.

Logic Level Circuit: Applicable to gold-plated contacts, 50,000 cycles

Electrical ratings: See table I.

Color and luminance: See table II, table III and table IV for display type S. See table V and table VI for display type N.

Sunlight readability (display type S):

Requirements: All legends shall be capable of being read in direct sunlight and at any glare-producing, specularly reflective angles up to 15 degrees ±2 degrees to the normal of the display viewing surface. The average luminance contrast ratio of each lighted legend character to background shall be 0.6 minimum (0.4 minimum for incandescent blue, incandescent NVIS green A and incandescent NVIS red). The average luminance contrast ratio of each unlighted legend character to background shall have an absolute value equal to or less than 0.1. The average luminance contrast ratio for each color shall not be less than the values listed in tables VII and VIII for the respective glare-producing angle.

Test method: The test procedure for measuring the average luminance contrast ratios for sunlight readability shall be the specular reflectance test in accordance with MIL-PRF-22885.

Color contrast: In addition to luminance contrast, color contrast is an important factor in sunlight readability. The effects of both luminance contrast and color contrast can be combined into a single value called the index of discrimination (ID). The index of discrimination value for all legend characters shall be greater than 1.0 for those legends to be considered as sunlight readable. The minimum value for the index of discrimination are also listed in table VII and table VIII. The index of discrimination is determined by using the same specular reflectance test setup shown in MIL-PRF-22885, and using the following formulas for calculation:

$$C_L = \frac{\log_{10}\left(\frac{L_1 + L_2}{L_b}\right)}{0.15} \quad \text{Formula I}$$

$$C_C = \frac{\sqrt{(u_1 - u_b)^2 + (v_1 - v_b)^2}}{0.027} \quad \text{Formula II}$$

$$ID = \sqrt{C_L^{\,2} + C_C^{\,2}} \quad \text{Formula III}$$

Where:
ID = Index of discrimination.
C_L = Luminance contrast.
C_C = Chrominance contrast.
L_1 = Average character luminance of energized legend.
L_2 = Average reflected character luminance of nonenergized legend.
L_b = Average reflected background luminance.
u_1, v_1 = Average 1960 UCS color coordinates of the reflected and emitted light from the illuminated legend.
u_b, v_b = Average 1960 UCS color coordinates of the reflected background light.

The illuminated chromaticity limits and minimum average luminance for sunlight readable displays are listed in table II, table III and table IV.

Display type H:

Requirements: All legends on an opaque black background visible when illuminated (same as display type S except contrast requirements do not apply)

Test method: The test procedure for measuring the average luminance and color of the illuminated visible white legend characters shall be in accordance with MIL-PRF-22885.

Display type X:

Requirements: All legends shall be visible only in ambient light as white lettering on black background. Legends do not illuminate and the lens module does not contain internal electronics.

Test method: The test procedure shall be by visual inspection of the legend only.

Display type 0:

No display is visible, only a matte black background. The lens module does not illuminate and does not contain internal electronics.

Display type N:

Requirements: All legends shall be visible white with an opaque black background. The legend characters shall always be visible in any light ambience except in darkened conditions. In darkened conditions, the legend characters shall illuminate in color with an average luminance of 0.5 to 3.0 foot-lamberts when energized at full rated voltage. See table V and table VI for specific colors and luminance.

Test method: The test procedure for measuring the average luminance and color of the illuminated visible white legend characters shall be in accordance with MIL-PRF-22885.

Display type D:

Requirements: All legends shall be visible white with an opaque black background. The legend characters shall illuminate in color with an average display luminance in excess of 100 foot-lamberts when energized at full rated voltage. See Table II for specific colors.

Test method: The test procedure for measuring the average luminance and color of the illuminated visible white legend characters shall be in accordance with MIL-PRF-22885.

Display type A:

Requirements: All legends shall be visible white on an obscure black background. The legend background shall illuminate in color with an average display luminance in excess of 200 foot-lamberts when energized at full rated voltage. See Table II, Table III and Table IV for specific colors. Contrast requirements do not apply.

Test method: The test procedure for measuring the average luminance and color of the illuminated display background shall be in accordance with MIL-PRF-22885.

Display type B:

Requirements: All legends shall be opaque black on an obscure black background. The legend characters shall remain black and the legend background shall illuminate in color with an average display luminance in excess of 200 foot-lamberts when energized at full rated voltage. See Table II, Table III and Table IV for specific colors. Contrast requirements do not apply.

Test method: The test procedure for measuring the average luminance and color of the illuminated display background shall be in accordance with MIL-PRF-22885.

Display type W:

Requirements: All legends shall be opaque black on a visible white background. The legend characters shall remain black and the legend background shall illuminate in color with an average display luminance in excess of 100 foot-lamberts when energized at full rated voltage. The color of the illuminated background is as specified in Table II. This option is only available in pushbutton style H and B from Table IX. Contrast requirements do not apply.

Test method: The test procedure for measuring the average luminance and color of the illuminated display background shall be in accordance with MIL-PRF-22885.

Night vision imaging system (NVIS) compatibility (except as noted):

NVIS Green A: Shall meet all MIL-STD-3009, as previously defined in MIL-L-85762, requirements for illuminated controls for type I, class A and type II, class B equipment.

NVIS Green B: Shall meet all MIL-STD-3009, as previously defined in MIL-L-85762, requirements for illuminated controls for type I, class A and type II, class B equipment.

NVIS Blue: Shall meet all MIL-STD-3009, as previously defined in MIL-L-85762, NVIS radiance requirements for illuminated controls and advisory lights for type I, Class A, type I, Class B equipment. The color shall meet the requirements as specified herein.

NVIS White: Shall meet all MIL-STD-3009 requirements for utility, map, work, and inspection lights for type I, class A and type II, class B equipment.

NVIS Yellow Class A: Shall meet all MIL-STD-3009, as previously defined in MIL-L-85762, requirements for caution signals for type I, class A and type II, class B equipment.

NVIS Yellow Class B: Shall meet all MIL-STD-3009, as previously defined in MIL-L-85762, requirements for caution signals for type I, class B and type II, class B equipment.

NVIS Red: Shall meet all MIL-STD-3009, as previously defined in MIL-L-85762, requirements for warning signals for type I, Class B and type II, class B equipment.

Alt NVIS Red: Indicator with Red color appearance for warning signals, similar in color to aviation red with reduced NVIS radiance but not compliant to the requirements of MIL-STD-3009.

Test methods: The test procedure for measuring luminance, chromaticity and spectral radiance shall be in accordance with MIL-STD-3009, as previously defined in MIL-L-85762, for illuminated controls (for NVIS green A and NVIS green B), illuminated controls and advisory lights (for NVIS blue), caution signals (for NVIS yellow) and warning signals (for NVIS red).

The night vision goggle compatible feature, when specified, is in addition to the sunlight readable feature and all minimum sunlight readable requirements shall be maintained on all type S displays along with the unique requirements for night vision goggle compatibility. When night vision goggle compatibility is specified for type N displays (visible legend), all the requirements for color and NVIS radiance in accordance with MIL-STD-3009, as previously defined in MIL-L-85762, shall be satisfied when display is operated at the specified luminance level (see table VI).

Lens module pushbutton caps containing NVIS compatible displays are marked with NVIS Type ( ), Class ( ), in accordance with MIL-STD-3009, as previously defined in MIL-L-85762.

EMI/RFI shielding:

Requirement: When specified, the EMI/RFI shielding attenuation shall be not less than 60 dB over the frequency range from 100 to 1,000 MHz.

Test method: Switches shall be tested to determine the shielding effectiveness in accordance with MIL-PRF-22885, for shielding efficiency.

Measurements are to be performed at the following frequencies:

Frequency	Minimum attenuation
100 MHz	60 dB
200 MHz	60 dB
400 MHz	60 dB
600 MHz	60 dB
800 MHz	60 dB
1,000 MHz	60 dB

See also Table XXIX

Part or Identifying Numbers (PIN): PIN's are assigned as follows:

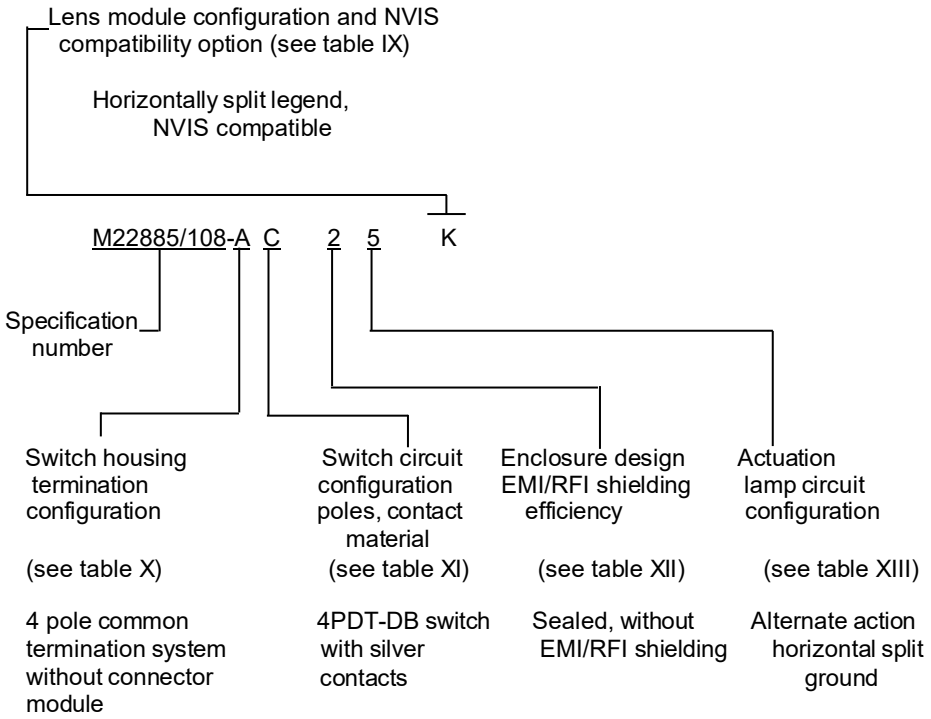

PIN's generated do not include display type (H, X, 0, N, S, D, A, B or W), segment color (see table XV and XVI), legends, incandescent lamp type or optional LED illumination. When lamps are to be included with the switch, equipment manufacturers may add an additional suffix number from table XIV to the military PIN for reference only. When the LED illuminated lens module pushbutton cap is selected equipment manufactures may add an additional suffix form the “designation codes” in Table XVII to the military PIN for reference only. Acquisition documents shall be prepared in accordance with ordering data in section 6 of MIL-PRF-22885 for category II switches.

Lamp types usable in the lens modules: Table XIV is shown for information only.

Lens module legend positions: Table XV and XVI is shown for information only.

LED illuminated lens module: Table XVII is shown for information only. The bottom of each LED lens module pushbutton cap shall be marked with the appropriate circuit diagram from Table XVIII showing whether it is a single common circuit or a horizontal split circuit and also showing the voltage, circuit polarity and any internal quadrant interconnections.

Optional Electronic Components (OEC):

Type III, IV, V, and VI switch/indicator bodies may include one or more “optional electronic components” and will be denoted by a PIN with an “M” from Table XI. For parts marked with an “M” from Table XI, the switch/indicator body shall be marked indicating the specific electronic components included and their specific pole locations within the body. Operating performance of “optional electronic components” shall be per the manufacturer’s specifications and shall have no negative effect on the performance of any sub-miniature electromechanical switch located within the switch/indicator body and illuminated cap. Table I describes the switches and contact material that are available to be used in switch bodies with the different types of “optional electronic components”. Bodies with “optional electronic components” shall be compatible with the appropriate CTS module described in FIGURE 10. “Optional Electronic Components” includes but it is not limited to:

- 4 pin components; designed to replace one switch pole position in Type III or IV configurations (Pole A and/or Pole B) or one switch pole position in Type V or VI configurations (Pole H, J, K, and/or L). Switch/indicator body markings for 4 pin components may include: SSR”XX” (solid state relay), DP”XX” (diode pack), TB”XX” (terminal block), and VS”XXX/XX/XX” (voltage sensor) where “X” represents variables which further define the operating characteristics of a specific electronic component.

- 8 pin narrow components; designed to replace two switch pole positions in Type V or VI configurations (Pole J and K). Switch/indicator body markings for 8 pin components may include: EL”X” (electronic latching switch), ER”X” (electronic rotary Switch), DL”X/XX/XX” or DL”X/XX/XX/XX” (logic gate array), and PT”X/XXX/XXX” (edge detector) where “X” represents variables which further define the operating characteristics of a specific electronic component.

- 8 or 12 pin wide components (Wide OEC); designed for Type V or VI configurations in positions of Poles J and K if an 8 pin, and in positions of Poles J, K and L if a 12pin. See Table I for electrical ratings of internal switches when Wide OECs are present. Switch/indicator body markings for wide OEC pin components may include: SR429/”XXX/XXXXX[XX]” (ARINC converter) where “X” represents variables which further define the operating characteristics of a specific electronic component.

Qualification inspection: All applicants for qualification approval shall demonstrate that each of their items conform to all the requirements specified in the applicable documents singularly and in combination with all other previously qualified items, regardless of manufacturer. Table XXV is based on the use of MIL-PRF-8805 category I or category II basic switches listed on QPL 8805.

Group submission: See table XXV.

Group A inspection: See table XXVI.

Group B inspection: See table XXVII.

TABLE I. Electrical ratings of internal switches when specified.

Contact material	Load	Sea level			50,000 feet	
		28 V dc		115 V ac, 60 Hz	28 V dc	
		NO or NC (amperes max)	2 circuit (amperes max)	NO or NC (amperes max)	NO or NC (amperes max)	2 circuit (amperes max)
Silver (gold finish) 1/	Resistive	7.5	5.0	7.5	4.0	3.0
	Inductive	4.0	2.0	4.0	2.5	1.0
	Motor	4.0	---	---	---	---
	Lamp	1.0	---	---	---	---
Gold Plated 2/	Resistive	1.0	---	---	1.0	---
	Inductive	0.5	---	---	0.5	---
	Logic Level Circuit is applicable: 10 mA ± 1 mA at an open circuit voltage of 5.0 VDC ± 0.5 VDC					
Gold Plated (Wide OEC) 3/	Resistive	1.0	---	---	1.0	---
	Inductive	0.5	---	---	0.5	---
	Logic Level Circuit is applicable: 10 mA ± 1 mA at an open circuit voltage of 5.0 VDC ± 0.5 VDC					

1/ Silver contact internal switches can be specified when there are a) no OEC's in the switch body, or b) there are only 4 pin component OEC's specified in the switch body.
2/ Gold plated contact internal switches can be specified when there are a) no OEC's in the switch body, or b) an 8 pin narrow OEC component is specified in the switch body.
3/ Gold plated (Wide OEC) contact internal switches must be specified when a Wide OEC is specified in the switch body.

TABLE II. Illuminated chromaticity limits and luminance for sunlight readable displays (type S).

Color	Color code	Lens module illumination source	x 1/ 3/	y 1/ 3/	Minimum average character luminance with or without EMI/RFI shielding
Red	R	Incandescent or LED	.695 .710 .655 .660	.285 SL 2/ .325 SL 2/	150 foot-lamberts
Green	G	Incandescent or LED	.300 .300 .380 .380	SL 2/ .600 .600 SL 2/	200 foot-lamberts
Yellow	Y	Incandescent or LED	.562 .570 .596 .605	.415 SL 2/ .382 SL 2/	300 foot-lamberts
Blue 4/	B	Incandescent Only	.230 .230 .320 .320	.420 .350 .350 .420	150 foot-lamberts
LED Cyan 4/	3	LED Only	.230 .230 .320 .320	.420 .350 .350 .420	150 foot-lamberts
White	W	Incandescent Only	.400 .460 .400 .460	.420 .420 .380 .380	250 foot-lamberts
LED Blue	T	LED Only	.100 .180 .180 .100	.145 .145 .250 .250	200 foot-lamberts
White Illuminant B 4870°K	A	LED Only	.330 .350 .400 .400 .380 .330	.330 .330 .380 .420 .420 .370	350 foot-lamberts

1/ Chromaticity is expressed as x and y on the CIE chromaticity diagram. Values shown are corners of the limiting envelope.
2/ SL - spectrum locus (where intersected by other coordinate pair).
3/ Chromaticity limits and luminance levels apply when the displays are energized at full rated voltage.
4/ Blue Incandescent and LED Cyan is not available as a display type D or display type W.

TABLE III. Illuminated chromaticity limits and luminance for NVIS night vision goggle compatible, sunlight readable displays (type S).

Color	Color code	Lens Module illumination source	u' 1/	v' 1/	r 1/	Foot-lamberts 3/	Minimum average character luminance with or without EMI/RFI shielding at full rated voltage 4/
NVIS Green A	P	Incandescent only	.088	.543	.037	0.1	200 foot-lamberts
NVIS Green A	H	LED only	.088	.543	.037	0.1	200 foot-lamberts
NVIS Green B 2/	J	Incandescent or LED	.131	.623	.057	0.1	200 foot-lamberts
NVIS Blue	E	LED Only	.082	.390	.037	0.1	200 foot-lamberts
NVIS White	Q	LED only	.190	.490	.040	0.1	200 foot-lamberts
NVIS Yellow Class A 2/	K	Incandescent or LED	.274	.622	.083	15.0	200 foot-lamberts
NVIS Yellow Class B 2/	U	LED	.274	.622	.083	15.0	200 foot-lamberts
NVIS Red 2/	S	Incandescent or LED	.450	.550	.060	15.0	200 foot-lamberts

1/ Chromaticity is expressed as u' and v' coordinates of the 1976 UCS diagram. The values shown describe a circle whose center is at u', v', and of radius r.
2/ The area enclosed by the described circle intersecting the spectral locus is the envelope limiting the acceptable color space.
3/ Chromaticity limits must be met when the display voltage is set to produce 0.1 foot-lamberts for NVIS green A, NVIS green B, NVIS white and NVIS blue, and 15 foot-lamberts for NVIS yellow Class A, NVIS yellow Class B and NVIS red.
4/ Minimum luminance values apply when the displays are energized at full rated voltage.

TABLE IV. Illuminated chromaticity limits and luminance for Alt NVIS Red sunlight readable displays (type S).

Color	Color code	Lens Module illumination source	Display Type	y' 1/3/	z' 1/3/	Foot-lamberts 3/	Minimum average character luminance with or without EMI/RFI shielding at full rated voltage 4/
Alt NVIS Red 2/	7	LED only	S	0.335	0.002	15	150 foot-lamberts

1/ Chromaticity is expressed as x and y on the CIE chromaticity diagram. Values shown are corners of the limiting envelope.
2/ Alt NVIS Red caps exceed the spectral NVIS radiance output defined for NVIS Red
3/ Chromaticity limits when luminance levels at 15 foot-lamberts
4/ Minimum luminance values apply when the displays are energized at full rated voltage.

TABLE V. Illuminated chromaticity limits and luminance for visible legend displays (type N).

Color	Color code	Lens module illumination source	x 1/	y 1/	Character luminance with or without EMI/RFI shielding
White	V	Incandescent Only	.400 .460 .400 .460	.420 .420 .380 .380	0.5 to 3.0 foot-lamberts
Red	N	Incandescent or LED	.695 .710 .655 .660	.285 SL 2/ .325 SL 2/	0.5 to 3.0 foot-lamberts
White Illuminant B 4870° K	D	LED only	.330 .350 .400 .400 .380 .330	.330 .330 .380 .420 .420 .370	0.5 to 3.0 foot-lamberts

1/ Chromaticity is expressed as x and y on the CIE chromaticity diagram. Values shown are corners of the limiting envelope.
2/ SL - spectrum locus (where intersected by other coordinate pair).

TABLE VI. Illuminated chromaticity limits and luminance for NVIS night vision goggle compatible, visible legend displays (type N).

Color	Color code	Lens module Illumination source	u' 1/	v' 1/	r 1/	Character luminance with or without EMI/RFI shielding
NVIS Green A	M	Incandescent Only	.088	.543	.037	0.5 to 3.0 foot-lamberts
NVIS Green A	F	LED only	.088	.543	.037	0.5 to 3.0 foot-lamberts
NVIS Green B 2/	L	Incandescent or LED	.131	.623	.057	0.5 to 3.0 foot-lamberts
NVIS White	X	LED only	.190	.490	.040	0.5 to 3.0 foot-lamberts

1/ Chromaticity is expressed as u' and v' coordinates of the 1976 UCS diagram. The values shown describe a circle whose center is at u', v', and of radius r.
2/ The area enclosed by the described circle intersecting the spectral locus is the envelope limiting the acceptable color space.

TABLE VII. Minimum contrast ratios 1/ and minimum indexes of discrimination 2/ for sunlight readable displays (type S) with or without EMI/RFI shielding.

Color 3/	Color code	Lens Module illumination source	Condition 1 ($\varphi 1 = \varphi 2 = 15°$)		Condition 2 ($\varphi 1 = \varphi 2 = 30°$)	
			Contrast ratio	Index of discrimination	Contrast ratio	Index of discrimination
Red	R	Incandescent or LED	0.6	2.0	0.3	1.4
Green	G	Incandescent or LED	0.6	1.6	0.3	1.2
Yellow	Y	Incandescent or LED	0.6	1.6	0.4	1.2
Blue	B	Incandescent only	0.4	1.2	0.2	1.1
LED Cyan	3	LED only	0.4	1.2	0.2	1.1
White	W	Incandescent only	0.6	1.2	0.2	1.1
LED Blue	T	LED only	0.6	1.6	0.3	1.2
White illuminant B 4870° K	A	LED only	0.6	1.4	0.4	1.2

1/ Minimum average contrast of each legend character.
2/ The index of discrimination takes into account both the luminance contrast and the chrominance contrast.
3/ Application note: In addition to luminance contrast, color contrast is an important factor in readability. Colors in table are listed in order of general preference. Red has the best color contrast during sunlight conditions; blue and white have the poorest color contrast, except LED blue which has good contrast in sunlight conditions.

TABLE VIII. Minimum contrast ratios 1/ and minimum indexes of discrimination 2/ for NVIS night vision goggle compatible sunlight readable displays (type S) with or without EMI/RFI shielding.

Color 3/	Color code	Lens module illumination source	Condition 1 ($\varphi 1 = \varphi 2 = 15°$) 4/	
			Contrast ratio	Index of discrimination
NViS Green A	P	Incandescent only	0.4	1.2
NVIS Green A	H	LED only	0.6	1.4
NVIS Green B	J	Incandescent or LED	0.6	1.6
NVIS Blue	E	LED only	0.6	1.6
NVIS White	Q	LED only	0.6	1.2
NVIS Yellow Class A	K	Incandescent or LED	0.6	1.4
NVIS Yellow Class B	U	LED only	0.6	1.6
NVIS Red	S	Incandescent or LED	0.4	1.1
Alt NVIS Red	7	LED only	0.4	1.1

1/ Minimum average contrast of each legend character.
2/ The index of discrimination takes into account both the luminance contrast and the chrominance contrast.
3/ Application note: In addition to luminance contrast, color contrast is an important factor in sunlight readability. Colors in table are listed in order of general preference for sunlight readability.
4/ Condition 2 is not applicable to NVIS compatible colors.

TABLE IX. Lens module configurations.

	Configurations							
Standard lighting designations	B	C	D	E	F	G	J	H
NVIS compatible designations	K	L	M	N	P	Q	R	S
					1/	1/	1/	

1/ Available for incandescent illuminated lens only

TABLE X. Switch housing termination configuration.

Termination type	Designation
Turret terminals	1
Wire wrap/PCB terminals	3
CTS (SPDT, DPDT, and indicator light)	
Without connector module 1/	4
With connector module 2/	5
CTS (4PDT only)	
Without connector module 1/	A
With connector module 2/	B
CTS (High Capacity with OEC)	
Without connector module 1/	D
With connector module 2/	E
CTS (Compact with OEC)	
Without connector module 1/	F
With connector module 2/	G

1/ The common termination system designation 4, A, D, or F is for the CTS switch housing excluding the connector module. The connector module is provided separately so wiring and harnessing can be accomplished independent of the switch housing.

2/ The common termination system designation 5, B, E, or G is for the CTS switch housing including the connector module. The connector module is provided plugged into the switch housing (sealing plugs are in their appropriate positions).

TABLE XI. Switch circuit configuration, poles and contact material.

Switch poles 1/ and circuit configuration	Contact material	
	Silver with gold finish	Gold plated
SPDT-SB	1	5
DPDT-SB	2	6
SPDT-DB	3	7
DPDT-DB	4	8
4PDT-SB	A	F
4PDT-DB	C	H
Indicator light	O	O
With OEC 2/	M 3/	M 3/

1/ SPDT - Single pole, double throw.
SB - Single break.
DPDT - Double pole, double throw.
DB - Double break.
4PDT - Four pole, double throw.
2/ With OEC- At least one OEC component is in the switch or indicator body.
3/ See Table I for the switches and contact material that can be specified in conjunction with each type of OEC.

TABLE XII. Enclosure design and EMI/RFI shielding efficiency.

Enclosure design	Without EMI/RFI shielding	With EMI/RFI shielding
1-unsealed	1	4
2-Dripproof 3-Watertight 4-Splashproof	2	5
High impact shock resistant 1/ 2-Dripproof 3-Watertight 4-Splashproof	3	6

1/ Not available in alternate action.

TABLE XIII. Lamp circuit configuration and actuation.

Lamp circuit or LED circuit configuration 1/	Actuation		
	Momentary	Alternate	Indicator
Single circuit, one common	1	4	7
Horizontal split circuit two commons	2	5	8
Vertical split circuit two commons 2/	3	6	9
Universal Body(Any LED circuit) 3/	M	L	J

1/ Specific lens cap configurations are listed in tables XVIII to XXIV.
2/ Not available in optional LED illuminated lens module
3/ Not available in incandescent lamp lens module

TABLE XIV. Incandescent lamp types usable in the lens modules. 1/

Lamp type	MS number	Voltage	Current	MSCP	Life hours
1	---	5	.060	.15	6,500
+2	M6363/6-4	5	.115	.15	40,000
3	---	12	.040	.15	16,000
4	---	14	.040	.15	16,000
5	---	18	.026	.15	10,000
6	M6363/6-5	28	.024	.15	16,000

1/ Lamps with a mean spherical candle power of .15 minimum must be used to obtain the sunlight readability specified. Replacement lamps must be aged and selected to meet this requirement.

TABLE XV. Lens module legend positions. 1/ 4/

Display Type Lighting	Legend Positions
Type S and Type N	1 | 2 / 3 | 4 5 / 3 | 4 5 / 6 7 | 2 / 6 7 | 8 9 2/ | 4 / 6 9 2/ | 8 5 / 7 2/
Type B	A | B / C | D E / C | D E / F G | B / F G
Type A	K | L / M | N P / M | N P / R T | L / R T
Type D	Q | J / S | U V / S | U V / X Y | J / X Y
Type W	W 3/ | I / O 3/
Type X and Type 0	1

1/ Segment characters are to be used to identify display type lighting, color and legend positions.
2/ Legend positions are available for incandescent illuminated lens module only.
3/ Type W display is available in lens module configuration H and B.
4/ Lens module legend position in this chart are compatible with circuit diagrams in Table XVIII, XIX and XX.
5/ Lens module may include non-illuminated legends or markings

TABLE XVI. Lens module legend positions for additional circuits . 1/, 3/

Display Type Lighting	Legend Positions
Type S Type N Type B Type A Type D Type W Type H	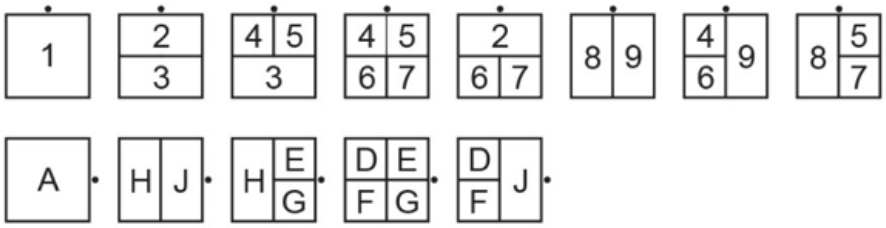
Type X and Type 0	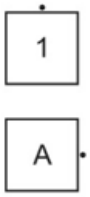

1/ Segment characters are to be used to identify display type lighting, color and legend positions.
2/ Type W display is available in lens module configuration H and B
3/ Lens module legend position in this chart are compatible with cap circuit diagrams in Tables XIX, XXI and XXII, XXIII, and XXIV.
4/ Lens module may include non-illuminated legends or markings

TABLE XVII. LED voltage, circuit polarity and quadrant interconnection styles. 1/, 2/

Quadrant Interconnections		Voltage, Circuit Polarity and Designation Code			
Block Diagram	Description	28 VDC Common Anode	28 VDC Common Cathode	5 VDC Common Anode	5 VDC Common Cathode
	Four inputs, all four Quadrants independent	A	F	L	R
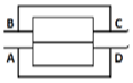	Two inputs, top quadrants coupled and bottom quadrants coupled	B	G	M	S
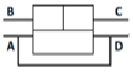	Three inputs, only bottom Two quadrants coupled	C	H	N	T
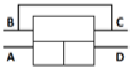	Three inputs, only top two Quadrants coupled	D	J	P	U
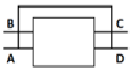	One input, all four quadrants Connected	E	K	Q	V

1/ Display quadrant power inputs are labeled A, B, C and D as viewed from the front of the display.
2/ The LED circuit is available with the quadrants A, B, C and D internally connected in various styles so one input wire can activate one or more quadrants thereby reducing the number of input wires necessary to illuminate the display.

TABLE XVIII LED lens module circuit diagrams. 28VDC, Voltage Dimming, No Blocking Diodes, No Press to Test. 1/ 2/ 3/ 4/

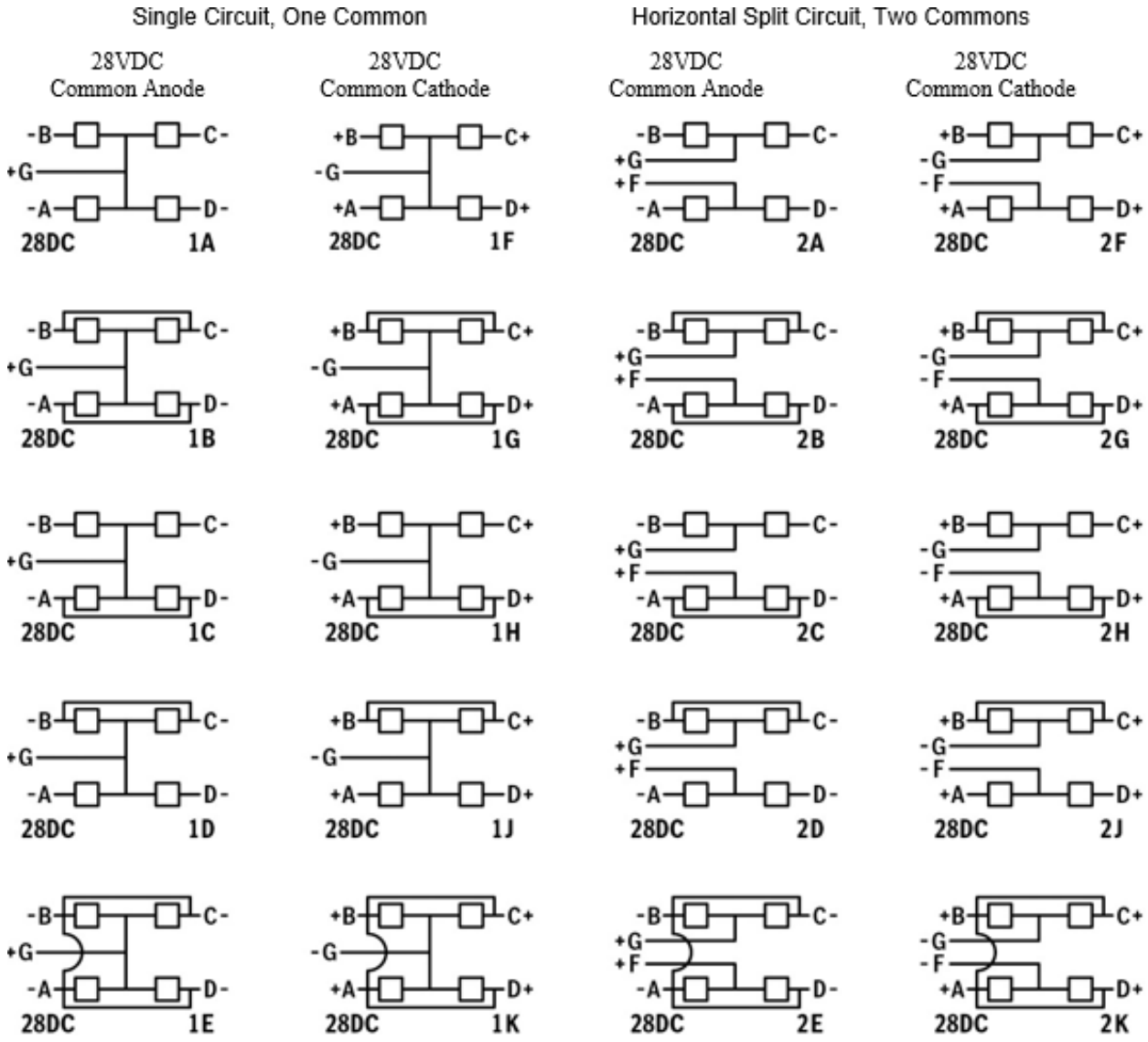

1/ The appropriate circuit diagram must be marked in white lettering on the bottom of the LED lens module pushbutton cap.
2/ The circuit diagrams are as viewed from the front of the display.
3/ The two character identifiers 1A, 1B, etc. are for reference only.
4/ See table XV for available cap positions.

TABLE XIX. LED lens module circuit diagrams. 28VDC, Discrete Dimming, With Blocking Diodes, No Press to Test. 1/ 2/ 3/ 4/

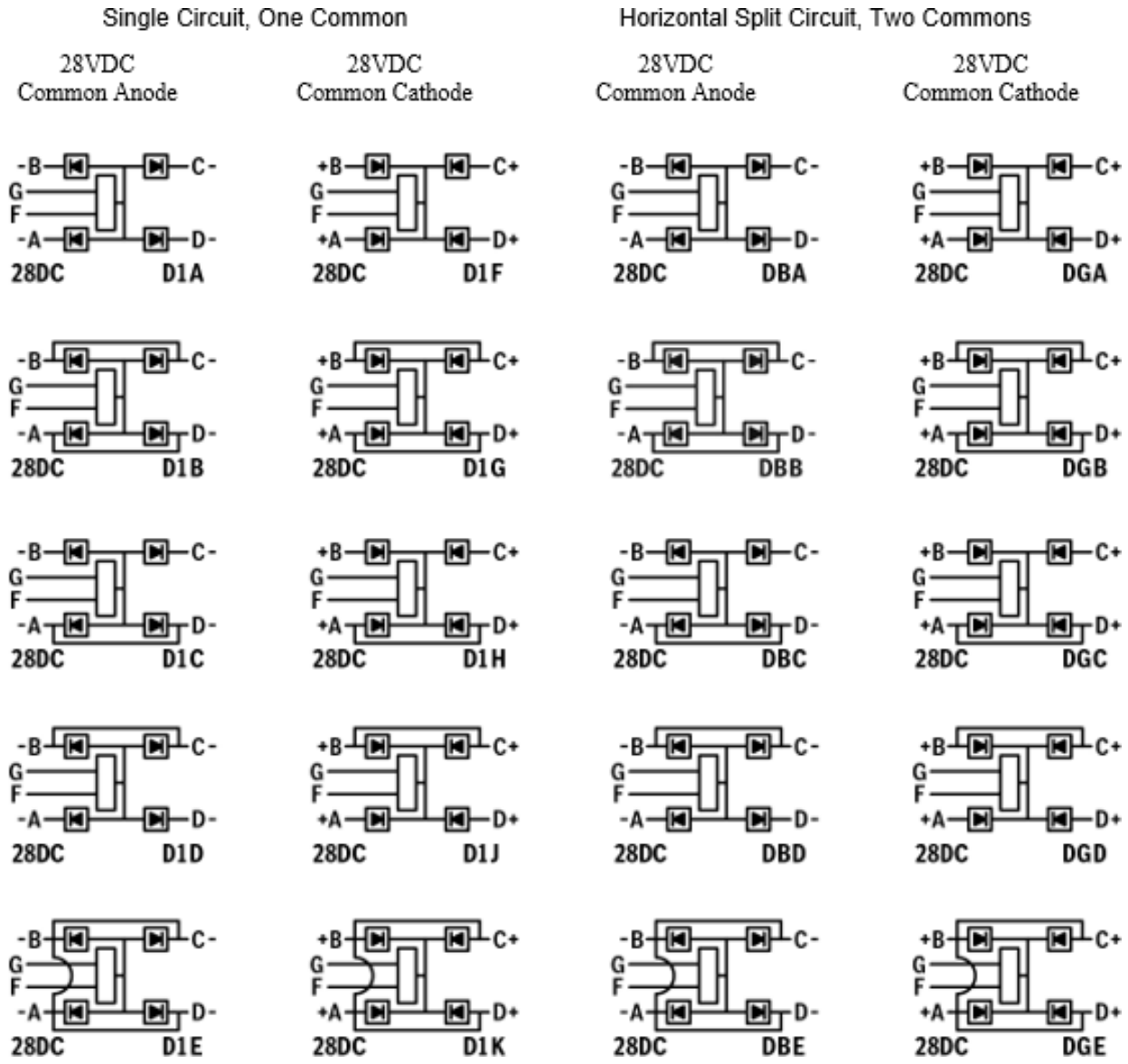

1/ The appropriate circuit diagram must be marked in white lettering on the bottom of the LED lens module pushbutton cap.
2/ The circuit diagrams are as viewed from the front of the display.
3/ The three character identifiers D1A, D1B, etc. are for reference only.
4/ See table XV and XVI for available cap positions

TABLE XX. LED lens module circuit diagrams. 5VDC, Voltage Dimming, No Blocking Diodes, No Press to Test. 1/ 2/ 3/ 4/

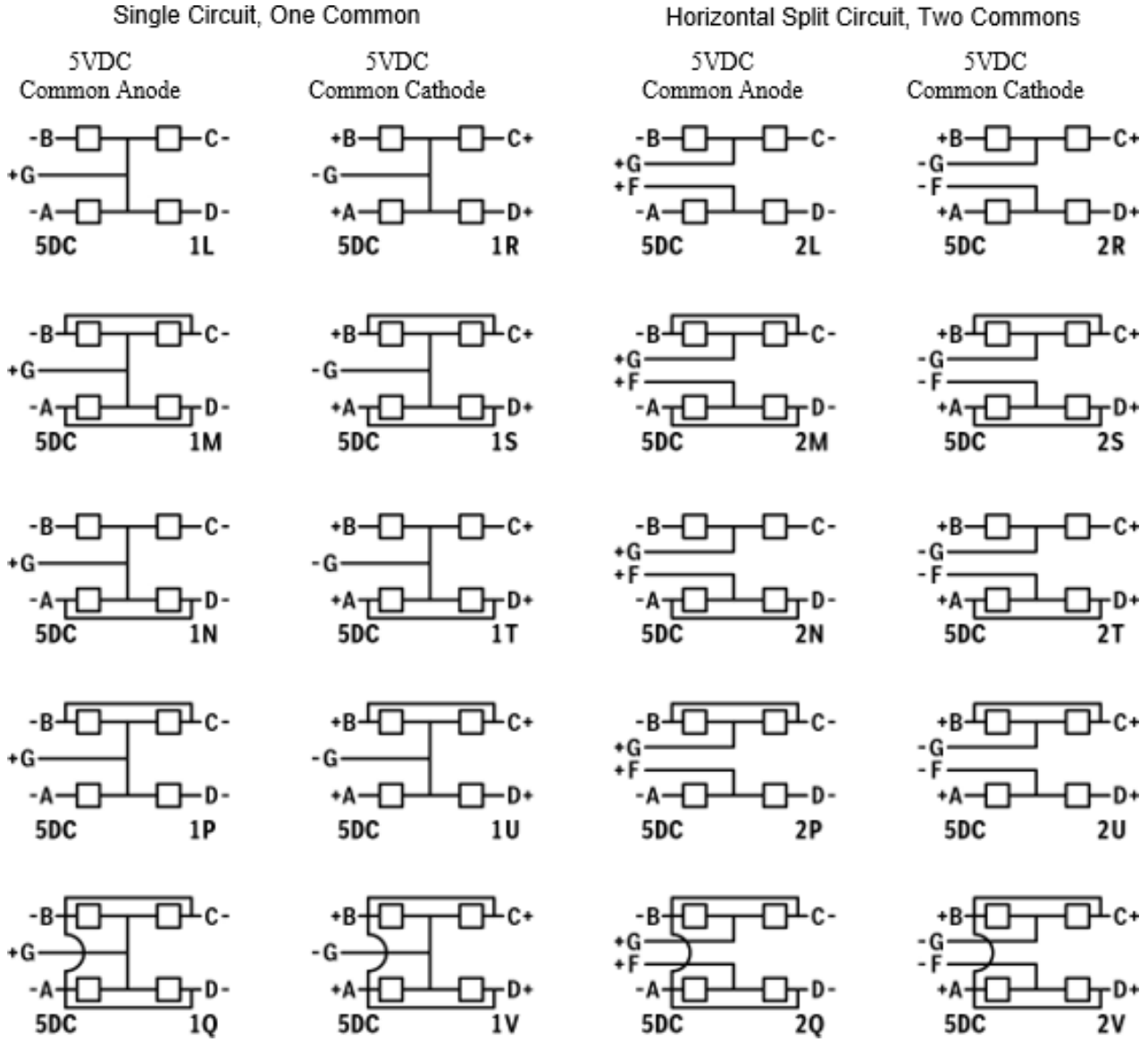

1/ The appropriate circuit diagram must be marked in white lettering on the bottom of the LED lens module pushbutton cap.
2/ The circuit diagrams are as viewed from the front of the display.
3/ The two character identifiers 1L, 1R, etc. are for reference only.
4/ See table XV for available cap positions

TABLE XXI. LED lens module circuit diagrams. 28VDC, Voltage Dimming, With Blocking Diodes, No Press to Test. 1/ 2/ 3/ 4/

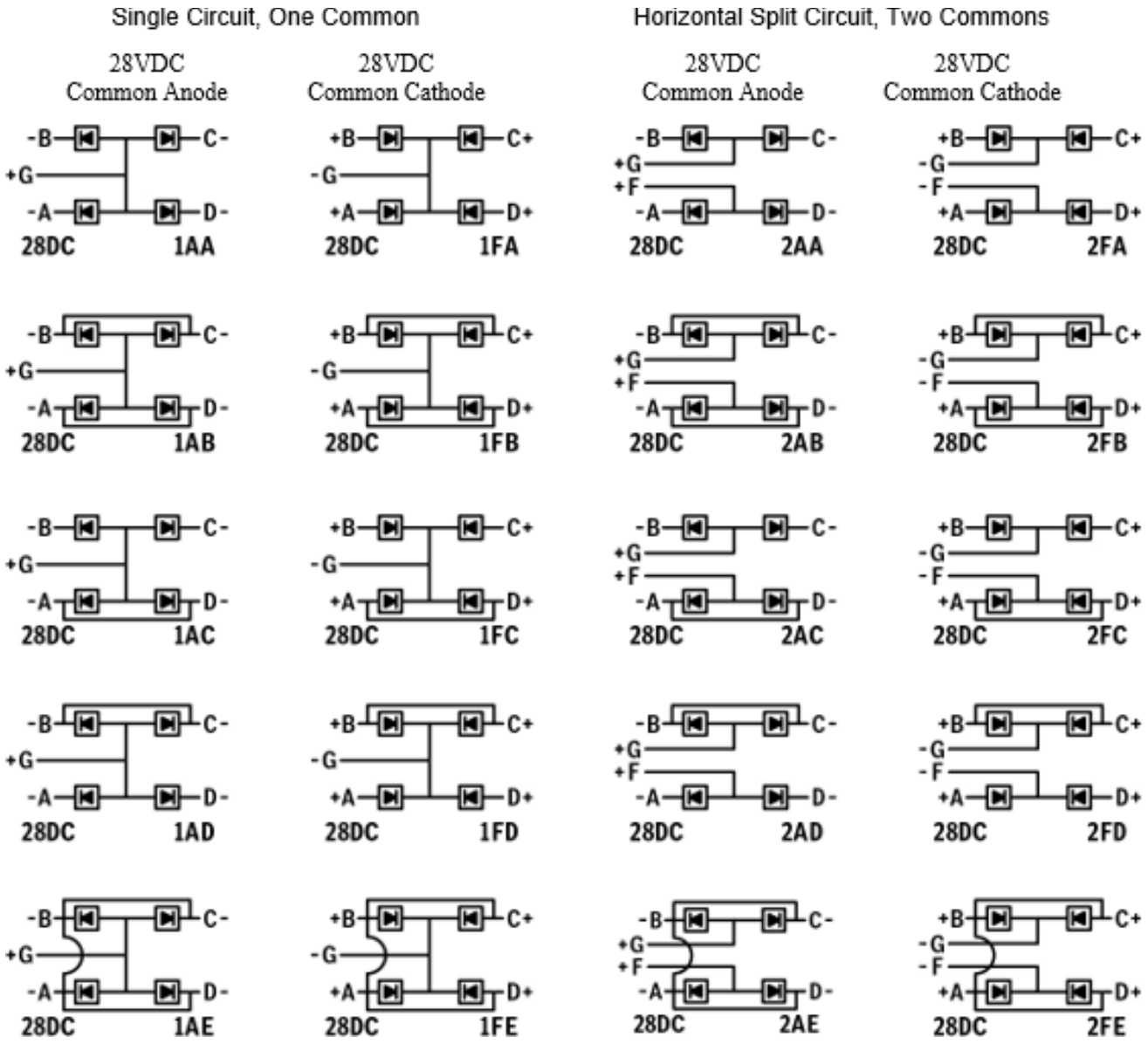

1/ The appropriate circuit diagram must be marked in white lettering on the bottom of the LED lens module pushbutton cap.
2/ The circuit diagrams are as viewed from the front of the display.
3/ The three character identifiers 1AA, 1AB, etc. are for reference only.
4/ See table XVI for available cap positions

TABLE XXII. LED lens module circuit diagrams. 28VDC, Voltage Dimming, With Blocking Diodes, With Press to Test. 1/ 2/ 3/ 4/

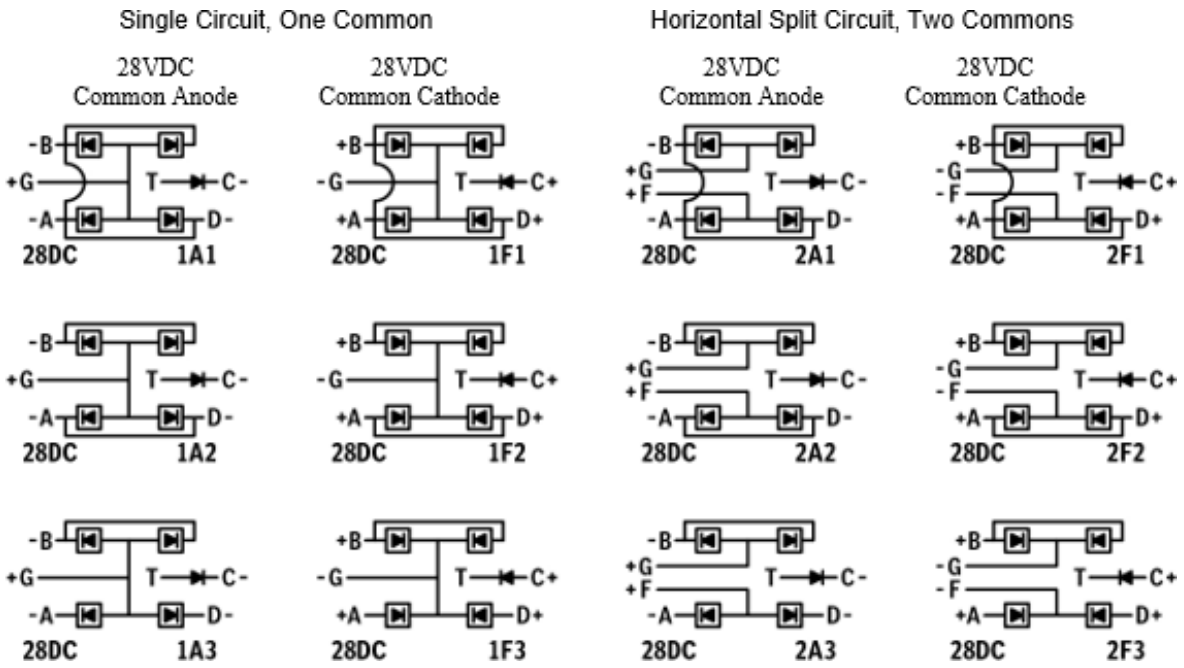

1/ The appropriate circuit diagram must be marked in white lettering on the bottom of the LED lens module pushbutton cap.
2/ The circuit diagrams are as viewed from the front of the display.
3/ The three character identifiers 1A1, 1F1, etc. are for reference only.
4/ See table XVI for available cap positions

TABLE XXIII. LED lens module circuit diagrams. 28VDC, Discrete Dimming, With Blocking Diodes, With Press to Test. 1/ 2/ 3/ 4/

Single Circuit

28VDC Common Anode	28VDC Common Cathode
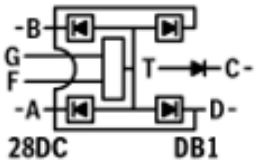	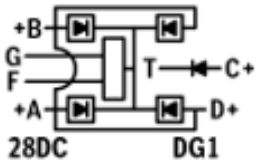
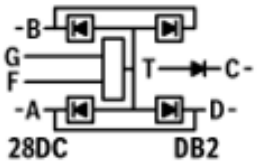	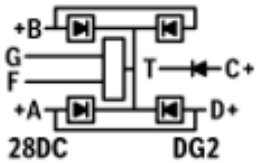
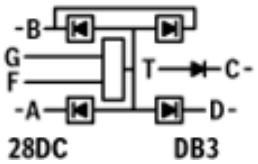	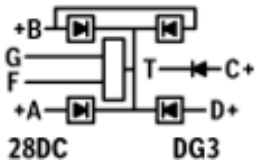

1/ The appropriate circuit diagram must be marked in white lettering on the bottom of the LED lens module pushbutton cap.
2/ The circuit diagrams are as viewed from the front of the display.
3/ The three character identifiers DB1, DB2, etc. are for reference only
4/ See table XVI for available cap positions

TABLE XXIV. LED lens module circuit diagrams. 28VDC, Discrete Dimming, with Blocking Diodes, No Press to Test. 1/ 2/ 3/ 4/

Single Circuit, One Common

28VDC Common Anode	28VDC Common Cathode
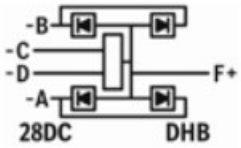	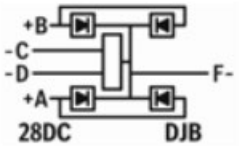
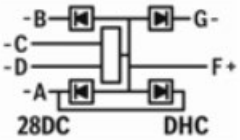	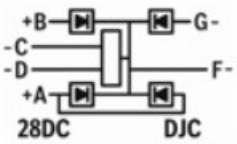
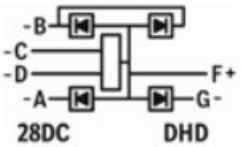	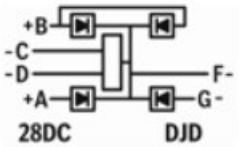
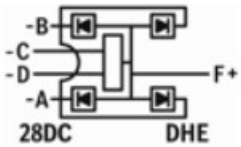	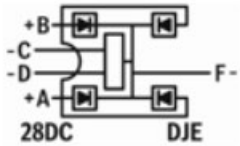

1/ The appropriate circuit diagram must be marked in white lettering on the bottom of the LED lens module pushbutton cap.
2/ The circuit diagrams are as viewed from the front of the display.
3/ The three character identifiers DBA, DGA, etc. are for reference only.
4/ See table XVI for available cap positions

TABLE XXV. Qualification inspection, group submission.

Test sample	Inspection table X of MIL-PRF-22885		Additional testing	Extent of approval 1/
	Group	Number of samples		
M22885/1081444E2 2/	I II III VI VII VIII	14 4 (from group I) 3/ 4/ 2 (from group I) 2 (from group I) 5/ 4 (from group I) 4/ 6/ 7/ 56 8/	Sunlight readable testing shall include determining the index of discrimination. NVIS color and NVIS radiance measurements shall be taken where applicable after sunlight readable testing.	All
M22885/1081844E2 2/	I VII	2 9/ 2 (from group I) 4/ 10/		
M22885/108BC61E2 2/	I II III V VI VII	12 4 (from group I) 4/ 11/ 12/ 2 (from group I) 2 (from group I) 4/ 12/ 2 (from group I) 13/ 2 (from group I) 4/ 14/		
M22885/1081232E2 2/	I II	4 4 (from group I) 4/ 11/ 12/		
2 samples - any wire wrap/pc terminal switch			Solderability Terminal strength	
2 samples – any LED lens module with two commons			Electrical environment test in accordance with the test methods described in RTCA/DO-160 Sections 15 through 22 and Section 25 for compliance with the equipment categories as listed in the electrical environment requirements section	
M22855/108EM_ _ 15/	I II V VI VII VIII	10 6 (from group I) 2 (from group I) 6 (from group I) 4 (from group I) 10 (from group I)	Electrical environment test in accordance with the test methods described in RTCA/DO-160 Sections 15 through 22 and Section 25 for compliance with the equipment categories as listed in the electrical environment requirements section	All "M" as described on table X

1/ Includes single break, silver contacts, gold contacts, and wire wrap termination when the basic switches are qualified to MIL-PRF-8805/101 category I or category II.
2/ Lens module configuration shall be "E" for non-NVIS legends and "N" for NVIS legends (3-way split) in accordance with table IX.

Test legend:

FUELS	
23	45

3/ Shock method I.
4/ During tests requiring switch to be mounted, one-half of the sample units shall be mounted utilizing the mounting spacer. The remaining half shall be mounted with the mounting spacer removed.
5/ Inductive dc NO-NC only, sea level.
6/ Two units shall be subjected to the mechanical endurance test:
7/ Two units shall be tested for intermediate current.
8/ 56 lens modules, two for each of 28 different colors, including additional lens modules for those color codes made from either incandescent or LED illumination source shall be tested for color, luminance, and sunlight readability where applicable. A single separate switch body shall be provided so lens modules can be individually energized.
9/ Contact resistance measurement for gold contact switches which are to be subjected to low level life testing shall be made in accordance with MIL-PRF-22885, switch contact resistance paragraph, except the test current shall not exceed 10 milliamperes and the open-circuit test voltage shall not exceed 30 millivolts dc. Maximum contact resistance is 3 ohms.
10/ Two units shall be tested for low level life only.
11/ Shock method II.
12/ Sealing shall be verified by performing the watertight test and the splashproof test only.
13/ Resistive dc two circuit only, sea level.
14/ Intermediate current test not required.
15/ All OECs shall function as intended per manufacturing specifications

TABLE XXVI. Group A inspection.

Inspection
Seal (when applicable) (external inspection only)
Visual and mechanical examination
Operating characteristics
Dielectric withstanding voltage 2/
Contact resistance 1/

1/ Contact resistance measurements for gold contact switches shall be measured in accordance with switch contact resistance paragraph of MIL-PRF-22885, except the test current shall not exceed 10 milliamperes and the open-circuit test voltage shall not exceed 30 millivolts dc. Maximum contact resistance is 3 ohms.

2/ Only for bodies without OECs

TABLE XXVII Group B inspection.

Inspection 1/	Test sample PIN's and sample numbers 3/																				
	M22885/ 108-5445E_								M22885/ 108-5861E_				M22885/ 108-3444E_		MS22885/ 108-7C41E_		MS22885/ 108-EM1M_		MS22885/ 108-EM5M_		
	1	2	3	4	5	6	7	8	9	10	11	12	13	14	15	16	17	18	19	20	2/
Visual and mechanical	X	X	X	X	X	X	X	X	X	X	X	X	X	X	X	X	X	X	X	X	
EMI per table XXIX																	X		X		
Solderability													X	X							
Shock I	X	X																			
Shock II									X	X											
Moisture resistance MIL-STD-810 Met 507 Proc II	X	X							X	X										X	
Salt spray			X	X																	
Overload cycling					X										X	X					
Electrical endurance-inductive dc															X	X					
Electrical endurance resistance dc					X	X												X			
Mechanical endurance							X	X													
Logic Level Circuit											X	X									
Color																					X
Luminance																					X
Sunlight readability																					X
NVIS compatibility																					X
Dielectric withstanding voltage					X	X									X	X		X		X	
Operating characteristics	X	X	X	X	X	X	X	X	X	X	X	X	X	X	X	X	X	X	X	X	
Seal									X	X											
Marking visibility	X	X	X	X					X	X											

1/ All tests shall be performed as required by table XXV.

2/ Two samples of each color.

3/ Any incandescent or LED lighting method regardless of dimming method.

TABLE XXVIII Electrical environment requirements of LED lighting circuit and Optional Electronic Components: 1/

Test Description	Test Parameters	Test Method	LED, PT"X/XXX/XXX" ,DL"X/XX/XX/XX" SSR"XX" DP"XX" ER"X" EL"X" VS"XXX/XX/XX" SR429/"XXX/XXXXX[XX]"
Magnetic Effect	1° deflection, 0.0m to 0.3 m	RTCA/DO-160 Section 15 level Z	X
Power Input: 2/	Aircraft Power: (V dc)18 to 32.2 VDC	RTCA/DO-160 Section 16.6.1.1 @30.3 V MIL-STD-704@22-29 V	X
	Power Interrupt:	RTCA/D O-160 Section 16.6.1.3	3/
	Normal Surge Voltage: 47 Vdc 5 ms, 40 V dc 30 ms, 17 VDC	RTCA/DO-160 Section 16.6.1.4 level A	X
	Engine Start Under voltage; Ramp input voltage from 10 V dc to 28 V dc in 35 seconds	RTCA/DO-160 Section 16.6.1.5 level B	X
	Low Voltage Condition: Decrease power from nominal to 0 V dc over a 10 minute period	RTCA/DO-160 Section 16.6.2.2 level B	X
	Momentary Under Voltage: 12 V dc operation for 7 seconds	RTCA/DO-160 Section 16.6.2.3 level A	X
	Abnormal Surge Voltage 60V 100uS	RTCA/DO-160 Section 16.6.2.4 Level B	X
Power Input	28 VDC System Power and surge	MIL-STD-704	X
Polarity Reversal	Reversal of positive and negative connections	MIL-STD-704 Paragraph 5.4.4	X
Spike 2/	600V, 10us, 50 ohm	RTCA/DO-160 section 17 level A	X
	400V, 5 ohm, 10uS	MIL-STD-461 CS106 Spike 1	X
AC Conducted Susceptibility 2/	Power Input, 4V Max, 0.01-150 KHz	RTCA/DO-160 Section 18 level Z	X
	30 Hz – 150 KHz	MIL-STD-461 CS101 Curve 1	X
Induced Signal Susceptibility	Magnetic and Electric induced fields. 340 Hz to 800 Hz	RTCA/DO-160 Section 19 level CW	X
RF Conducted Susceptibility	300mA, 10KHz-400MHz, CW, SW	RTCA/DO-160 section 20 Level Y	X
	10 KHz – 200 MHz, 109 dB uA, CW, SW	MIL-STD-461 CS114 Curve 5	X

TABLE XXVIII. Electrical environment requirements of LED lighting circuit and Optional Electronic Components: 1/. continued

Test Description	Test Parameters	Test Method	LED, PT"X/XXX/XXX" ,DL"X/XX/XX/XX" SSR"XX" DP"XX" ER"X" EL"X" VS"XXX/XX/XX" SR429/"XXX/XXXXX[XX]"
RF Radiated Susceptibility	100 MHz – 18 GHz, CW, SW	RTCA/DO-160 Section 20	Level Y 200V/M
	2 MHz – 18 GHz, CW, SW	MIL-STD-461 RS103	200 V/M
RF Conducted Emissions	150 KHz – 152 MHz	RTCA/DO-160 Section 21 Level P	X
	10 KHz – 10 MHz	MIL-STD-461 CE102	X
RF Radiated Emissions	150 KHz to 6 GHz	RTCA/DO-160 Section 21 Level P	X
	10 KHz TO 6 GHz	MIL-STD-461 RE102	X
Military Transient	5 amp, 30 ns	MIL-STD-461 CS115	X
	10KHz, 100KHz, 1MHz, 10MHz, 30MHz, 100MHz	MIL-STD-461 CS116	X
Lightning Induced Transient	Waveform 5A, 300V, 120us.	RTCA/DO-160 Section 22 B3K3L3	X
	Waveform 3, 600V, 1 MHz, 10Mhz	RTCA/DO-160 Section 22 Category B3K3L3	X
Dielectric Withstanding	1000 VAC	MIL-STD-202-301	X
Electrostatic Discharge	15,000V, 150pf, 330 ohms	RTCA/DO-160 Section 25	X

1/ EMC testing is not applicable to Mechanical switches and Terminal Blocks
2/ For 5VDC CAPS and SSR "XX" scaled to the appropriate voltage test level
3/ For SSR "XX" not applicable. For EL"X" and VS"XXX/XX/XX" level B 50ms, for all other OEC and LED Level A 200ms

Changes from previous issue. The margins of this specification are marked with vertical lines to indicate where changes from the previous issue were made. This was done as a convenience only and the Government assumes no liability whatsoever for any inaccuracies in these notations. Bidders and contractors are cautioned to evaluate the requirements of this document based on the entire content irrespective of the marginal notations and relationship to the previous issue.

Referenced Documents

MIL-PRF-8805	MIL-PRF-8805/101
MIL-PRF-22885	MIL-L-85762
MIL-STD-108	MIL-STD-171
MIL-STD-202-207	MIL-STD-202-213
MIL-STD-202-301	MIL-STD-461
MIL-STD-704	MIL-STD-810
MIL-STD-3009	QPL 22885
SAE-AS81714	QPL 8805
SAE-AS39029/22	SAE-AS81969
RTCA DO-160	

Custodians:
Army - CR
Navy - EC
Air Force - 85
DLA – CC

Preparing activity:
DLA - CC

(Project 5930-2026-054)

NOTE: The activities listed above were interested in this document as of the date of this document. Since organizations and responsibilities can change, you should verify the currency of the information above using the ASSIST Online database at https://assist.dla.mil/ .