DEFENSE LOGISTICS AGENCY
WEAPONS SUPPORT
P.O. BOX 3990
COLUMBUS, OHIO 43218-3990

October 13, 2026

MEMORANDUM FOR MILITARY/INDUSTRY DISTRIBUTION

SUBJECT: Initial Draft of Performance Specification Sheet MIL-PRF-19500/686 Rev A with Amendment 1; Project Number 5961-2026-098.

The initial draft of the subject document, dated October 13, 2026, is now available for viewing and downloading from the ASSIST or DLA Weapons Support (Columbus) -VA websites using following URLs:

https://assist.dla.mil
or
https://weaponssupportapps.dla.mil/Programs/MilSpec/DocSearch.aspx

The initial draft of the subject document was generated to add a terminal finish designator to the PIN in order to fully define device physical characteristics. Highlighting has been used to allow for easy recognition of changes.

The device type covered by MIL-PRF-19500/686 is 2N2907A

If this document is of interest to you, please provide your concurrence or comments to this Center by the date indicated on the ASSIST or DLA Weapons Support electronic mail notification and not 30 days from the date of this letter or the date on the draft document. Late comments will be held for the next coordination of the document. Comments from military departments must be identified as either "Essential" or "Suggested". Essential comments must be justified with supporting data. Military review activities should forward comments to their custodians or this office, as applicable, in sufficient time to allow for consolidating the department reply. If no response is received from your activity in the allotted coordination cycle, concurrence will be assumed.

The point of contact for this action is Mr. David Corbett, DLA Weapons Support (Columbus), ATTN: VAC, Post Office Box 3990, Columbus, OH 43218-3990. Mr. Corbett can also be reached by phone at 614-693-0168 or by e-mail david.corbett@dla.mil.

Sincerely,

MUHAMMAD AKBAR
Chief,
Active Devices Branch

This draft, dated 13 October 2025, prepared by DLA−CC, has not been approved and is subject to modification. DO NOT USE PRIOR TO APPROVAL (Project 5961−2026−098). Comments are due no later than the date specified in the e-mail notification. P.O.C. is David Corbett; phone 614−693−0168 / e-mail: david.corbett@dla.mil

The documentation and process conversion measures necessary to comply with this document shall be completed by 90 days from date.

INCH-POUND

MIL-PRF-19500/686A
w/AMENDMENT 1
DRAFT
SUPERSEDING
MIL-PRF-19500/686A
7 February 2026

TRANSISTOR, PNP, SILICON, SWITCHING, NON-HERMETIC, SURFACE MOUNT, TYPE 2N2907A QUALITY LEVELS JANP, JANPTX, AND JANPTXV

This specification is approved for use by all Departments and Agencies of the Department of Defense.

The requirements for acquiring the product described herein shall consist of this specification sheet and MIL-PRF-19500.

1. SCOPE

1.1 Scope. This specification covers the performance requirements for non-hermetic plastic encapsulated PNP, silicon, switching transistors. Three levels of product assurance (JANP, JANPTX, and JANPTXV) are provided for each device type as specified in MIL-PRF-19500.

1.2 Physical dimensions. The device package for the encapsulated device type is a SOT-23 (similar to TO-236AB) in accordance with figure 1.

1.3 Maximum ratings. Unless otherwise specified T_A = +25 °C.

Types	P_T T_A =+25°C (1) (2)	I_C	V_{CBO}	V_{CEO}	V_{EBO}	$R_{\theta JA}$	T_{OP} and T_{STG}
	mW	mA	V	V	V	°C/W	°C
2N2907A	500	600	60	60	5	417 (1) 556 (2)	-55 to +150

(1) If the printed wiring board is an alumina substrate; alumina = 0.4 x 0.3 x 0.024 inch, 99.5% alumina: Derate linearly 2.4 mW/°C for T_A > +25°C.
(2) If the printed wiring board is a FR5 substrate; FR5 = 1.0 x 0.75 x 0.062 inch (25.4 x 19.05 x 1.57 mm): Derate linearly 1.8 mW/°C for T_A > +25°C.

Comments, suggestions, or questions on this document should be addressed to DLA Weapons Support, ATTN: VAC, P.O. Box 3990, Columbus, OH 43218-3990, or emailed to Semiconductor@dla.mil. Since contact information can change, you may want to verify the currency of this address information using the ASSIST Online database at https://assist.dla.mil.

AMSC N/A
FSC 5961
DISTRIBUTION STATEMENT A. Approved for public release. Distribution is unlimited.

1.4 Primary electrical characteristics. Unless otherwise specified at T_A = +25 °C.

	h_{FE} at V_{CE} = 10 V dc					
~~R~~ Limit	h_{FE1} I_C = 0. 1 mA dc	h_{FE2} I_C = 1.0 mA dc	h_{FE3} I_C = 10 mA dc	h_{FE4} (1) I_C = 150 mA dc	h_{FE5} (1) I_C = 500 mA dc	h_{FE8} I_C = 1.0 µA dc
Min	75	100	100	100	50	35
Max		450		300		

	h_{FE} at V_{CE} = 10 V dc					
Limit	h_{FE1} I_C = 0. 1 mA dc	h_{FE2} I_C = 1.0 mA dc	h_{FE3} I_C = 10 mA dc	h_{FE4} (1) I_C = 150 mA dc	h_{FE5} (1) I_C = 500 mA dc	h_{FE8} I_C = 1.0 µA dc
Min	75	100	100	100	50	35
Max		450		300		

Limit	h_{FE} at V_{CE} = 10 V dc h_{FE9} I_C = 10 µA dc	|hfe| f = 100 MHz V_{CE} = 20 V dc I_C = 20 mA dc	C_{obo} 100kHz ≤ f ≤ 1 MHz V_{CB} = 10 V dc I_E = 0	Switching (saturated)	
				ton	toff
			pF	ns	ns
Min	40	2.0			
Max			8	45	300

Limit	$V_{CE(sat)1}$ (1) I_C = 150 mA dc I_B = 15 mA dc	$V_{CE(sat)2}$ (1) I_C = 500 mA dc I_B = 50 mA dc	$V_{BE(sat)1}$ (1) I_C = 150 mA dc I_B = 15 mA dc	$V_{BE(sat)2}$ (1) I_C = 500 mA dc I_B = 50 mA dc
	V dc	V dc	V dc	V dc
Min			0.6	
Max	0.4	1.6	1.3	2.6

(1) Pulsed see 4.5.1.

1.5 Part or Identifying Number (PIN). The PIN is in accordance with MIL-PRF-19500 and as specified herein. See 6.4 for PIN construction example and 6.5 for a list of available PINs.

1.5.1 JAN certification mark and quality level designators for encapsulated devices. The quality level designators for encapsulated devices that are applicable for this specification sheet from the lowest to the highest level are "JANP", "JANPTX", and "JANPTXV".

1.5.2 Device type. The designation system for the device types of transistors covered by this specification sheet are as follows.

1.5.2.1 First number and first letter symbols. The transistors of this specification sheet use the first number and letter symbols "2N".

1.5.2.2 Second number symbols. The second number symbols for the transistors covered by this specification sheet are "2907".

1.5.3 Suffix symbols. The following suffix letters are incorporated in the PIN in the order listed below.

1.5.3.1 First suffix symbol (modified version designator). All devices use an "A" suffix symbol that indicates an electrical parameter modified version of the device versus the non-suffix device. Non-A suffix devices are not covered by this specification.

1.5.3.2 Second suffix symbol (package designators). The second set of suffix symbols designate the package outline for the devices covered by this specification sheet. The suffix letters "PE1" are used on devices that use a plastic SOT-23 gullwing package.

1.5.3.3 Third suffix (terminal finish designator). The third set of suffix symbols designate the terminal finish. The available finishes are as follows:

-A	Hot solder dip
-C	Gold plate
-E	Gold flash palladium

2. APPLICABLE PUBLICATIONS ~~DOCUMENTS~~

2.1 General. The publications ~~documents~~ listed in this section are specified in sections 3 and 4 of this specification. This section does not include publications ~~documents~~ cited in other sections of this specification or recommended for additional information or as examples. While every effort has been made to ensure the completeness of this list, document users are cautioned that they must meet all specified requirements publications ~~documents~~ cited in sections 3 and 4 of this specification, whether or not they are listed.

2.2 Government publications ~~documents~~.

2.2.1 Specifications, standards, and handbooks. The following specifications, standards, and handbooks form a part of this document to the extent specified herein. Unless otherwise specified, the issues of these documents are those cited in the solicitation.

DEPARTMENT OF DEFENSE SPECIFICATIONS

MIL-PRF-19500 − Semiconductor Devices, General Specification for.

DEPARTMENT OF DEFENSE STANDARDS

MIL-STD-750 − Test Methods For Semiconductor Devices.

(Copies of these publications ~~documents~~ are available online at https://quicksearch.dla.mil.)

2.3 Non-Government publications. The following publications ~~documents~~ form a part of this document to the extent specified herein. Unless otherwise specified, the issues of the publications ~~documents~~ which are those cited in the solicitation or contract.

JEDEC − SOLID STATE TECHNOLOGY ASSOCIATION (JEDEC)

JESD22-A101 − Steady State Temperature-Humidity Bias Life Test.
JESD22-A102 − Accelerated Moisture Resistance -Unbiased Autoclave.
JESD22-A113 − Preconditioning of Nonhermetic Surface Mount Devices Prior to Reliability Testing.
J−STD−020 − Moisture Reflow Sensitivity Classification for Surface Mount Devices.

(Copies of these publications ~~documents~~ are available online at https://www.jedec.org.)

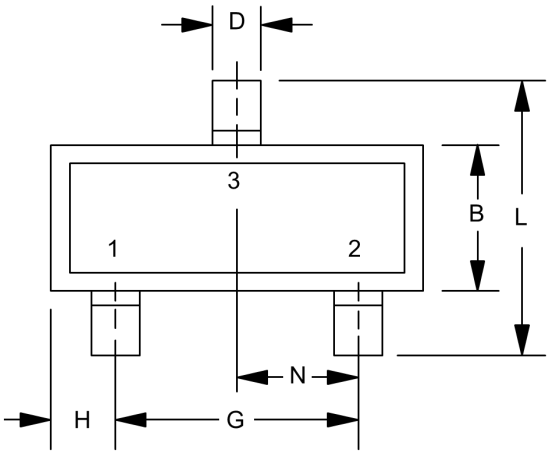

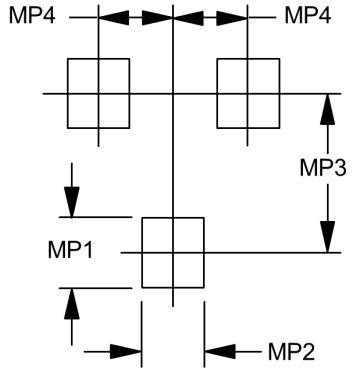

MOUNTING PAD LAYOUT

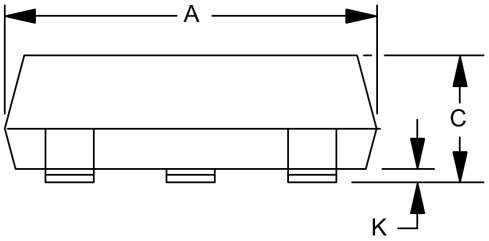

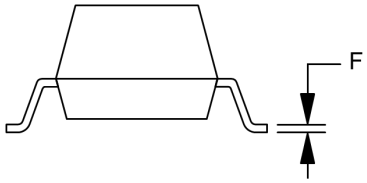

Symbol	Dimensions				Symbol	Dimensions			
	Inches		Millimeters			Inches		Millimeters	
	Min	Max	Min	Max		Min	Max	Min	Max
A	.110	.122	2.8	3.1	K	.0004	.004	0.01	0.10
B	.047	.056	1.20	1.43	L	.094	.103	2.4	2.6
C	.035	.045	0.90	1.15	N	.037	.038	0.94	0.96
D	.012	.020	0.30	0.50	MP1	.035	.036	0.89	0.91
F	.003	.008	0.08	0.20	MP2	.031	.032	0.79	0.81
G	.074	.076	1.88	1.92	MP3	.078	.079	1.99	2.01
H	.018	.024	0.46	0.59	MP4	.037	.038	0.94	0.96

NOTES:
1. All dimensions are in inches. Millimeters are given for general information only.
2. Terminal numbers are shown for reference. 1 = Base, 2 = Emitter, 3 = Collector.

FIGURE 1. Physical dimensions of SOT-23 (similar to TO-236AB) package.

(Non-Government standards and other publications are normally available from the organizations that prepare or distribute the documents. These documents may also be available in or through libraries or other informational services.)

2.4 Order of precedence. In the event of a conflict between the text of this document and the references cited herein, the text of this document takes precedence. Nothing in this document, however, supersedes applicable laws and regulations unless a specific exemption has been obtained.

3. REQUIREMENTS

3.1 General. The requirements for acquiring the product described herein shall consist of this document and MIL-PRF-19500.

3.2 Qualification. Devices furnished under this specification shall be products that are manufactured by a manufacturer authorized by the qualifying activity for listing on the applicable qualified manufacturer's list (QML) before contract award (see 4.2 and 6.3).

3.3 Abbreviations, symbols, and definitions. Abbreviations, symbols, and definitions used herein shall be as specified in MIL-PRF-19500 and as follows.

NGS – Non-Government Standard
PE1 – Plastic encapsulated (non-hermetic) package.

3.4 Interface and physical dimensions. The interface and physical dimensions shall be as specified in MIL-PRF-19500 and figure 1 herein.

3.4.1 Lead finish. Lead finish shall be solderable in accordance with MIL-PRF-19500, MIL-STD-750, and herein. Where a choice of lead finish is desired, it shall be specified in the acquisition document (see 6.2).

3.4.2 Device construction. Devices shall be a non-hermetic, plastic encapsulated, with either a coated or uncoated die, wire bonded, non-cavity, construction in accordance with the requirements of MIL-PRF-19500 and herein (see figures 2 and 3).

3.5 Marking. Marking shall be in accordance with MIL-PRF-19500.

3.6 Electrical performance characteristics. Unless otherwise specified herein, the electrical performance characteristics are as specified in 1.3, 1.4, and table I herein.

3.7 Electrical test requirements. The electrical test requirements shall be as specified in table I herein.

3.8 Workmanship. Semiconductor devices shall be processed in such a manner as to be uniform in quality and shall be free from other defects that will affect life, serviceability, or appearance.

4. VERIFICATION

4.1 Classification of Inspections. The inspection requirements specified herein are classified as follows:

a. Qualification inspection (see 4.2).

b. Screening (see 4.3).

c. Conformance inspection (see 4.4).

4.2 Qualification inspection. Qualification inspection shall be in accordance with MIL-PRF-19500 and as specified herein.

4.2.1 Group E inspection. Group E inspection shall be performed for qualification or requalification only. In case qualification was awarded to a prior revision of the associated specification that did not request the performance of table II tests, the tests specified in table II herein shall be performed on the first inspection lot of this revision to maintain qualification.

4.3 Screening (quality level JANPTX and JANPTXV only). Screening shall be in accordance with table J-II of MIL-PRF-19500 and as specified herein. The following measurements shall be made in accordance with table I herein. Devices that exceed the limits of table I herein shall not be acceptable.

Screen	Measurements
2	Optional
3a	Required
3b	Not applicable
3c (1)	Thermal impedance (see 4.3.2)
9	Not applicable
10	48 hours minimum
11	I_{CBO2}; h_{FE4}
12	See 4.3.1
13	Subgroup 2 of table I herein; ΔI_{CBO2} = 100 percent of initial value or 5 nA dc, whichever is greater; Δh_{FE4} = ±15 percent

(1) Shall be performed anytime after temperature cycling, screen 3a and does not need to be repeated in screening requirements.

4.3.1 Power burn-in conditions. Power burn-in conditions shall be in accordance with condition B of method 1039 of MIL-STD-750. The details shall be as follows: T_A = Room ambient as defined in the general requirements of 4.5 of MIL-STD-750; V_{CB} = 10 to 30 V dc, power shall be applied to achieve a T_J of +135°C minimum and a minimum power dissipation of 75 percent of rated P_T as defined in 1.3.

4.3.2 Thermal impedance. The thermal impedance measurements shall be performed in accordance with method 3131 of MIL-STD-750 using the guidelines in that method for determining I_M, I_H, t_H, t_{MD} (and V_C where appropriate). The thermal impedance limit shall be less than the process determined statistical maximum limit as outlined in method 3131 of MIL-STD-750. See figure 4 for the layout of the substrate used for device mounting.

4.4 Conformance inspection. Conformance inspection shall be in accordance with MIL-PRF-19500 and as specified herein.

4.4.1 Group A inspection. Group A inspection shall be conducted in accordance with table J-III of MIL-PRF-19500 (using the small die flow for subgroup 1) and table I herein. End-point electrical measurements shall be in accordance with table I, subgroup 2 herein. Separate samples may be used for each subgroup.

4.4.2 Group B inspection. Group B inspection for quality levels JANP, JANPTX, and JANPTXV shall be conducted in accordance with the conditions specified in table J-IVC (small die flow) of MIL-PRF-19500. Delta limit measurements shall be as specified below and shall be the steps of table III herein.

4.4.2.1 Group B sample selection. Samples selected for group B inspection for JANP and JANPTX shall be selected randomly from a minimum of three wafers (or from each wafer in the lot).

4.4.2.2 Group B failures. In the event of a group B failure, the manufacturer may select a new sample at double size from either the failed assembly lot or from another assembly lot from the same wafer lot. If the new "assembly lot" option is exercised, the failed assembly lot shall be scrapped.

4.4.3 Group C inspection. Group C inspection shall be conducted in accordance with the conditions specified for subgroup testing in table J-V of MIL-PRF-19500 and herein. Delta limit measurements shall be in accordance with table III herein.

4.4.4 Group E inspection. Group E inspection shall be conducted in accordance with the conditions specified for subgroup testing in table J-VI of MIL-PRF-19500 and as specified in table II herein. Electrical measurements (end-points) shall be in accordance with table I, subgroup 2 herein. Delta limit measurements shall be in accordance with table III herein.

4.5 Method of inspection. Methods of inspection shall be as specified in the appropriate tables and as follows.

4.5.1 Pulse measurements. Conditions for pulse measurement shall be as specified in section 4 of MIL-STD-750.

4.5.2 Input capacitance. This test shall be conducted in accordance with method 3240 of MIL-STD-750, except the output capacitor shall be omitted.

TABLE I. Group A inspection.

Inspection 1/	MIL-STD-750		Symbol	Limit	Limit	Unit
	Method	Conditions		Min	Max	
Subgroup 1 2/						
Small die flow inspections and tests.		See MIL-PRF-19500, table J-III, subgroup 1, for small die flow only.				
Subgroup 2						
Collector to base cutoff current	3036	V_{CB} = 60 V dc	I_{CBO1}		10	µA dc
Emitter to base cutoff current	3061	V_{EB} = 5 V dc	I_{EBO1}		10	µA dc
Breakdown voltage, collector to emitter	3011	Bias condition D; I_C = 10 mA dc; pulsed (see 4.5.1)	$V_{(BR)CEO}$	60		V dc
Collector to emitter cutoff current	3041	Bias condition C; V_{CE} = 50 V dc	I_{CES}		50	nA dc
Collector to base cutoff current	3036	Bias condition D; V_{CB} = 50 V dc	I_{CBO2}		10	nA dc
Emitter to base cutoff current	3061	Bias condition D; V_{EB} = 4 V dc	I_{EBO2}		50	nA dc
Forward-current transfer ratio	3076	V_{CE} = 10 V dc; I_C = 0.1 mA dc	h_{FE1}	75		
Forward-current transfer ratio	3076	V_{CE} = 10 V dc; I_C = 1.0 mA dc	h_{FE2}	100	450	
Forward-current transfer ratio	3076	V_{CE} = 10 V dc; I_C = 10 mA dc	h_{FE3}	100		
Forward-current transfer ratio	3076	V_{CE} = 10 V dc; I_C = 150 mA dc; pulsed (see 4.5.1)	h_{FE4}	100	300	
Forward-current transfer ratio	3076	V_{CE} = 10 V dc; I_C = 500 mA dc; pulsed (see 4.5.1)	h_{FE5}	50		
Collector-emitter saturation voltage	3071	I_C = 150 mA dc; I_B = 15 mA dc pulsed (see 4.5.1)	$V_{CE(sat)1}$		0.4	V dc
Collector-emitter saturation voltage	3071	I_C = 500 mA dc; I_B = 50 mA dc; pulsed (see 4.5.1)	$V_{CE(sat)2}$		1.6	V dc

See footnotes at end of table.

TABLE I. Group A inspection - Continued.

Inspection 1/	MIL-STD-750		Symbol	Limit	Limit	Unit
	Method	Conditions		Min	Max	
Subgroup 2 - continued						
Base-emitter saturation voltage	3066	Test condition A; I_C = 150 mA dc; I_B = 15 mA dc; pulsed (see 4.5.1)	$V_{BE(sat)1}$	0.6	1.3	V dc
Base-emitter saturation voltage	3066	Test condition A; I_C = 500 mA dc; I_B = 50 mA dc; pulsed (see 4.5.1)	$V_{BE(sat)2}$		2.6	V dc
Subgroup 3						
High temperature operation		T_A = +150°C				
Collector to base cutoff current	3036	Bias condition D; V_{CB} = 50 V dc	I_{CBO3}		10	µA dc
Low temperature operation		T_A = -55°C				
Forward-current transfer ratio	3076	V_{CE} = 10 V dc; I_C = 10 mA dc	h_{FE6}	50		
Subgroup 4						
Small-signal short-circuit forward current transfer ratio	3206	V_{CE} = 10 V dc; I_C = 1 mA dc; f = 1 kHz	h_{fe}	100		
Magnitude of small-signal short-circuit forward current transfer ratio	3306	V_{CE} = 20 V dc; I_C = 20 mA dc; f = 100 MHz	$\lvert h_{fe} \rvert$	2.0		
Input capacitance (output open- circuited)	3240	V_{EB} = 2 V dc; I_C = 0; 100 kHz ≤ f ≤ 1 MHz	C_{ibo}		30	pF
Open circuit output capacitance	3236	V_{CB} = 10 V dc; I_E = 0; f = 1 MHz 100 kHz ≤ f ≤ 1 MHz	C_{obo}		8	pF
Saturated turn-on time		(See figure 5)	t_{on}		45	ns
Saturated turn-off time		(See figure 6)	t_{off}		300	ns
Subgroups 5, 6 and 7						
Not required						

1/ For sampling plan see MIL-PRF-19500.
2/ For resubmission of failed subgroup A1, double the sample size of the failed test or sequence of tests. A failure in group A, subgroup 1 shall not require retest of the entire subgroup. Only the failed test shall be rerun upon submission.

TABLE II. Group E inspection (all quality levels) − for qualification and requalification only.

Inspection	MIL-STD-750 or specified NGS		Sample plan
	Method	Conditions	
Subgroup 1			n = 45, c = 0
Temperature cycling (air to air)	1051	Test condition G, 1000 cycles.	
Electrical measurements		See table I, subgroup 2.	
Subgroup 2			n = 45, c = 0
Intermittent life	1037	Intermittent operation life: V_{CB} = 10 V dc , 15,000 cycles, $\Delta T_J \geq +100°C$; forced air cooling allowed on cooling cycle only.	
Electrical measurements		See table I, subgroup 2.	
Subgroup 3			
Not applicable			
Subgroup 4			n = 10, c = 0
Thermal resistance	3131	See figure 4 for substrate layout.	
Thermal impedance curves		See MIL-PRF-19500, table E-IX, subgroup 4	
Subgroup 6			
ESD	1020		

TABLE III. Groups B, C and E delta limit measurements.

Step	Inspection	MIL-STD-750		Symbol	Limit
		Method	Conditions		
1	Collector-base cutoff current	3036	Bias condition D, V_{CB} = 50 V dc	ΔI_{CB02} 1/	Pre test distribution to average +3σ & -3σ. Post test distribution to average +4σ & -4σ of the pre test results.
2	Forward current transfer ratio	3076	V_{CE} = 10 V dc; I_C = 150 mA dc; pulsed see 4.5.1	Δh_{FE4} 1/	Pre test distribution to average +3σ & -3σ. Post test distribution to average +4σ & -4σ of the pre test results (not to exceed 25% change from initial reading)

1/ Devices which exceed the table I limits for this test shall not be accepted.

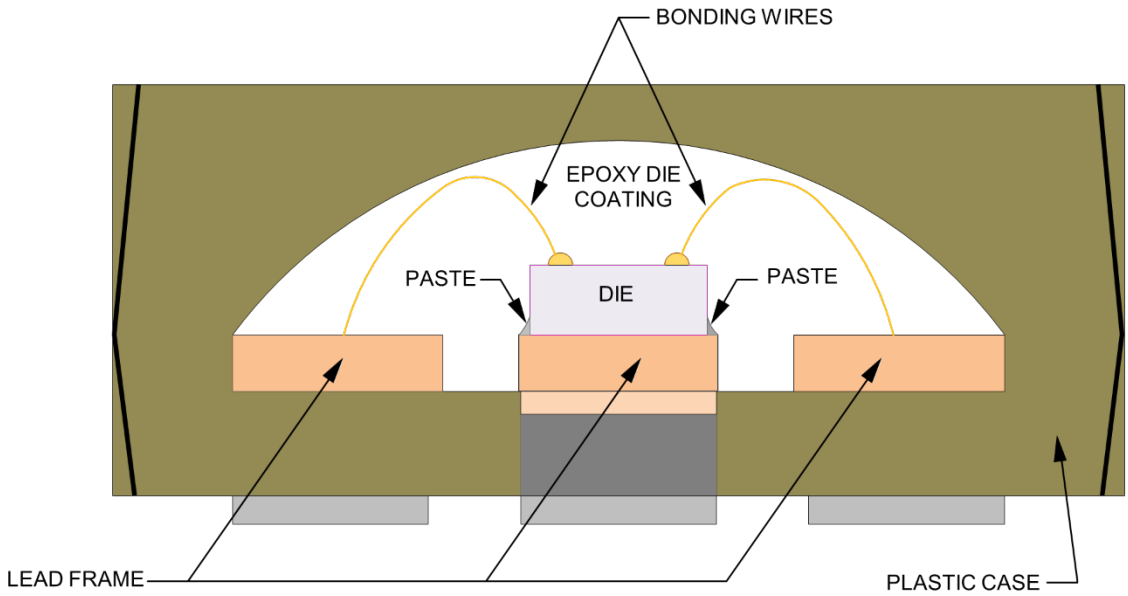

FIGURE 2. Sample construction using secondary die coating.

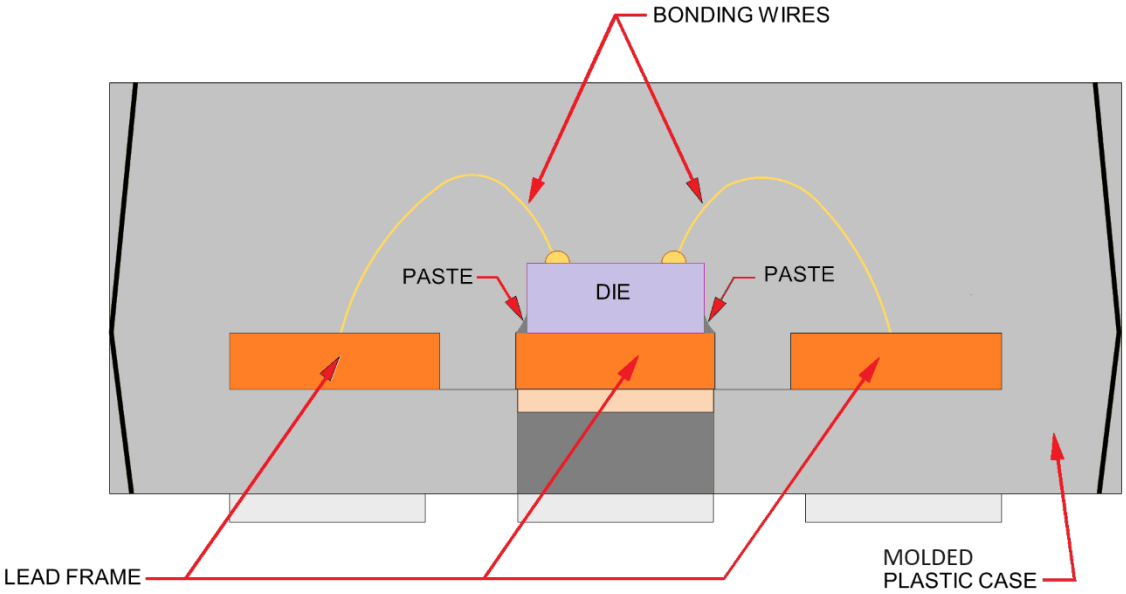

FIGURE 3. Sample construction without secondary die coating.

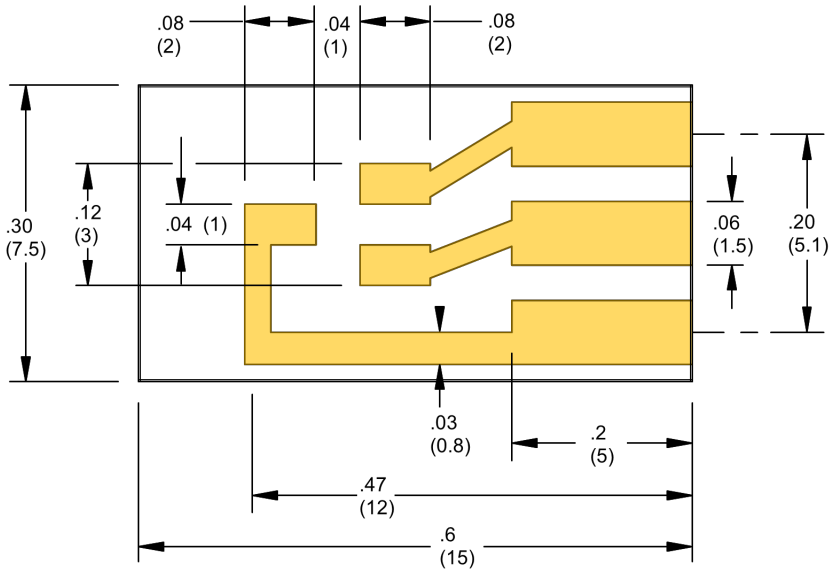

FIGURE 4. Layout for $R_{\theta JA}$ test.

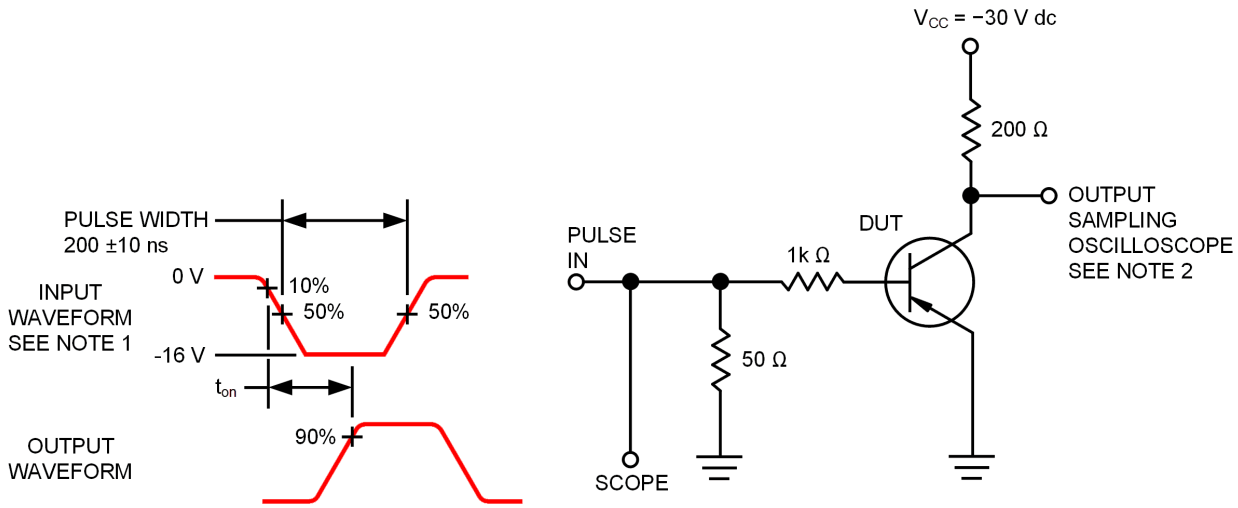

NOTES:

1. The rise time (t_r) of the applied pulse shall be ≤ 2.0 ns, duty cycle ≤ 2 percent and the generator source impedance shall be 50 ohms.
2. Sampling oscilloscope: Z_{in} ≥ 100 K ohms, C_{in} ≤ 12 pF, rise time ≤ 5 ns.

FIGURE 5. Saturated turn-on switching time test circuit.

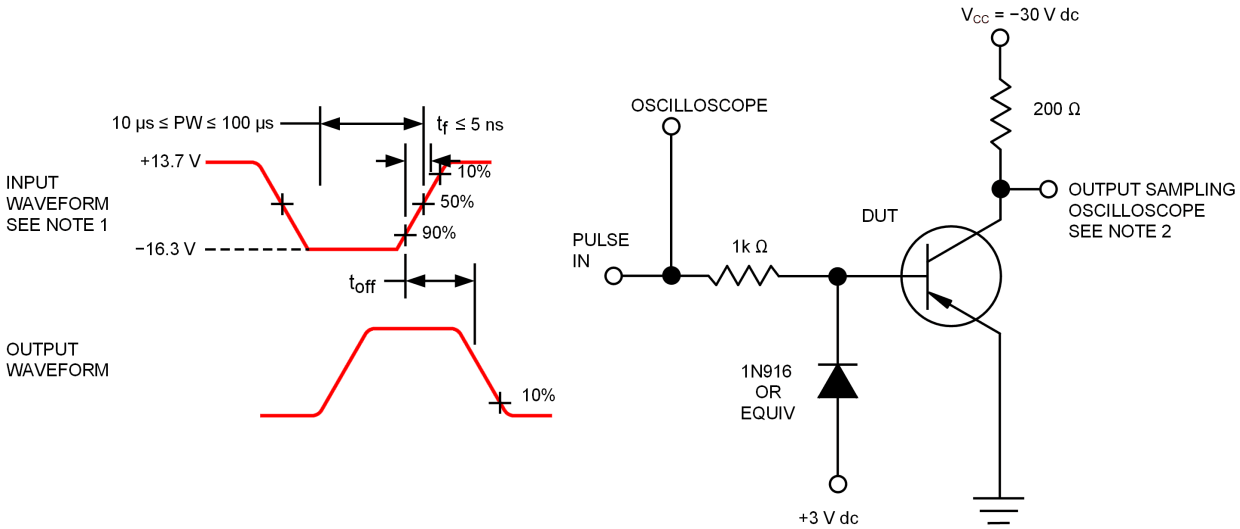

NOTES:

1. The rise time (t_r) of the applied pulse shall be ≤ 2.0 ns, duty cycle ≤ 2 percent and the generator source impedance shall be 50 ohms.
2. Sampling oscilloscope: Z_{in} ≥ 100 K ohms, C_{in} ≤ 12 pF, rise time ≤ 5 ns.

FIGURE 6. Saturated turn-off switching time test circuit.

5. PACKAGING

5.1 Packaging. For acquisition purposes, the packaging requirements shall be as specified in the contract or order (see 6.2). When actual packaging of materiel is to be performed by DoD personnel, these personnel need to contact the responsible packaging activity to ascertain requisite packaging requirements. Packaging requirements are maintained by the Inventory Control Point's packaging activity within the Military Department or Defense Agency, or within the Military Department's System Command. Packaging data retrieval is available from the managing Military Department's or Defense Agency's automated packaging files, CD-ROM products, or by contacting the responsible packaging activity.

6. NOTES

(This section contains information of a general or explanatory nature that may be helpful, but is not mandatory. The notes specified in MIL-PRF-19500 are applicable to this specification.)

6.1 Intended use. Semiconductors conforming to this specification are intended for original equipment design applications and logistic support of existing equipment.

6.2 Acquisition requirements. Acquisition documents should specify the following:

a. Title, number, and date of this specification.

b. Packaging requirements (see 5.1).

c. Lead finish (see 3.4.1).

d. The complete PIN, see 1.5 and 6.4.

6.3 Qualification. With respect to products requiring qualification, awards will be made only for products which are, at the time of award of contract, qualified for inclusion in Qualified Manufacturers List (QML 19500) whether or not such products have actually been so listed by that date. The attention of the contractors is called to these requirements, and manufacturers are urged to arrange to have the products that they propose to offer to the Federal Government tested for qualification in order that they may be eligible to be awarded contracts or orders for the products covered by this specification. Information pertaining to qualification of products may be obtained from DLA Weapons Support, ATTN: VQE, P.O. Box 3990, Columbus, OH 43218-3990 or e-mail vqe.chief@dla.mil. An online listing of products qualified to this specification may be found in the Qualified Products Database (QPD) at https://qpldocs.dla.mil.

6.4 PIN construction example. The PINs for encapsulated devices are constructed using the following form.

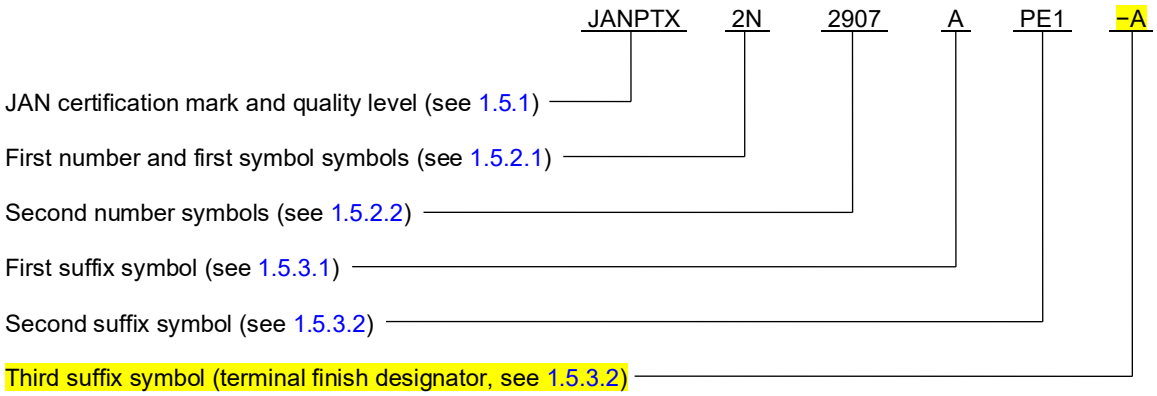

6.5 List of PINs. There is currently only three PINs available on this specification sheet. Those three PINs are JANP2N2907APE1, JANPTX2N2907APE1 and JANPTXV2N2907APE1.

6.6 Alternate configurations. Alternate configurations of the devices covered by this specification sheet are available on MIL−PRF−19500/291 as either hermetic packaged devices or unencapsulated die.

6.7 Request for new types and configurations. Requests for new device types or configurations for inclusions in this specification sheet should be submitted to: DLA Weapons Support, ATTN: VAC, Post Office Box 3990, Columbus, OH 43218-3990 or by electronic mail at Semiconductor@dla.mil.

6.8 ~~Changes from previous issue. Marginal notations are not used in this revision to identify changes with respect to the previous issue due to the extent of the changes.~~ Amendment notations. The margins of this specification are marked with vertical bars to indicate modifications generated by this amendment. This was done as a convenience only and the Government assumes no liability whatsoever for any inaccuracies in these notations. Bidders and contractors are cautioned to evaluate the requirements of this document based on the entire content irrespective of the marginal notations and relationship to the previous issue.

CONCLUDING MATERIAL

Custodians:
Army − CR
Navy − SH
Air Force − 85
NASA − NA
DLA − CC

Preparing activity:
DLA − CC

(Project 5961−2026−098)

NOTE: The activities listed above were interested in this document as of the date of this document. Since organizations and responsibilities can change, you should verify the currency of the information above using ~~the~~ ASSIST ~~Online database~~ at https://assist.dla.mil.