DEFENSE LOGISTICS AGENCY
WEAPONS SUPPORT
P.O. BOX 3990
COLUMBUS, OHIO 43218-3990

August 24, 2026

MEMORANDUM FOR MILITARY/INDUSTRY DISTRIBUTION

SUBJECT: Initial Draft of Performance Specification Sheet MIL-PRF-19500/317U, Project Number 5961-2026-085.

The initial draft for this subject document, dated August 24, 2026, is now available for viewing and downloading from the DLA Weapons Support-VA Web site:

https://WeaponsSupportApps.dla.mil/Programs/MilSpec/DocSearch.aspx

The initial draft of the subject document was generated to update the UB case height dimension and to update it to the latest document format and various editorial changes to bring it into compliance with MIL-STD-961. Highlighting has been used for easy change recognition.

Concurrence or comments are required at this office within 30 days from the date of this letter (September 23, 2025). Comments received after this period will be retained for consideration during the next coordination cycle. Comments submitted by military departments must be identified as either "Essential" or "Suggested". Essential comments must include supporting justification or data. Military review activities should forward comments through their respective custodians, as applicable, allowing sufficient time for consolidation of the department's response. A lack of response to this draft will be interpreted as concurrence.

The point of contact for this document is Mr. Jason Hochstetler, DLA Weapons Support - VAC, Post Office Box 3990, Columbus, OH 43218-3990. Mr. Hochstetler can also be reached at 614-693-2825 / DSN 392-693-2825 or by e-mail to: Jason.hochstetler@dla.mil.

/ Signed /

MUHAMMAD AKBAR
Chief
Active Devices Branch

NOTE: This draft, dated 24 August 2026 prepared by DLA – CC, has not been approved and is subject to modification. DO NOT USE PRIOR TO APPROVAL. (Project 5961-2026-085)
COMMENTS ARE DUE BY 23 September 2026.
P.O.C. Jason Hochstetler, ph 614-693-2825
e-mail: jason.hochstetler@dla.mil

INCH POUND

MIL-PRF-19500/317U
DRAFT
SUPERSEDING
MIL-PRF-19500/317T
w/AMENDMENT 5
17 April 2026

PERFORMANCE SPECIFICATION SHEET

TRANSISTOR, NPN, SILICON, SWITCHING, ENCAPSULATED (THROUGH-HOLE AND SURFACE MOUNT), AND UNENCAPSULATED, RADIATION HARDNESS ASSURANCE, TYPES 2N2369A, 2N3227, 2N4449, QUALITY LEVELS JAN, JANTX, JANTXV, JANS, JANHC, JANKC

This specification is approved for use by all Departments and Agencies of the Department of Defense.

The requirements for acquiring the product described herein shall consist of this specification sheet and MIL-PRF-19500.

1. SCOPE

1.1 Scope. This specification covers the performance requirements for NPN, silicon, high speed switching transistors (including dual devices). Four levels of product assurance (JAN, JANTX, JANTXV and JANS) are provided for each device type as specified in MIL-PRF-19500, and two levels of product assurance are provided for each unencapsulated device type. RHA level designators “E”, “K”, “U”, “M”, “D”, “P”, “L”, “R”, “F”, “G”, and “H” are appended to the device prefix to identify devices, which have passed RHA requirements.

1.2 Package outlines and die topography. The device packages for the encapsulated (THROUGH-HOLE AND SURFACE MOUNT) device types are as follows: (2N2369A and 2N3227) (TO-18) in accordance with figure 1, (2N4449) (TO-46) in accordance with figure 2, (2N2369A 2N3227, 2N4449) (UB, UBC, and UBCN) in accordance with figure 3, (UA version) in accordance with figure 4, (U version dual devices) in accordance with figure 5, The dimensions and topography for JANHC and JANKC unencapsulated die are as follows: The A version die (for 2N2369A) in accordance with figure 6, B version die (for 2N2369A, 2N3227) in accordance with figure 7, and C version die (for 2N2369A, 2N3227, 2N4449) in accordance with figure 8.

Comments, suggestions, or questions on this document should be addressed to Weapons Support, ATTN: VAC, P.O. Box 3990, Columbus, OH 43218-3990, or emailed to Semiconductor@dla.mil. Since contact information can change, you may want to verify the currency of this address information using the ASSIST Online database at https://assist.dla.mil.

AMSC N/A
FSC 5961
DISTRIBUTION STATEMENT A. Approved for public release. Distribution is unlimited.

1.3 Maximum ratings. Unless otherwise specified, T_A = +25°C.

Types	P_T T_A = +25°C	P_T T_C = +125°C	P_T T_{SP} = +125°C (1)	V_{CBO}	V_{EBO}	V_{CEO}	V_{CES}	I_C	T_J and T_{STG}
	W	W	W	V dc	V dc	V dc	V dc	mA dc	°C
2N2369A, L, UA, UB, UBC, UBCN	0.36 (2)	0.36 (3)(4)	0.36 (3)	40	4.5	15	40	100	-65 to +200
2N4449, L, UA, UB, UBC, UBCN	0.36 (2)	0.36 (3)(4)	0.36 (3)	40	4.5	15	40	100	
2N3227, L, UA, UB, UBC, UBCN	0.36 (2)	0.36 (3)(4)	0.36 (3)	40	6.0	20	40	100	
2N2369AU	0.5 (5)			40	4.5	15	40	100	
2N4449U	0.5 (5)			40	4.5	15	40	100	
2N3227U	0.5 (5)			40	6.0	20	40	100	

Types	$R_{\theta JA}$	$R_{\theta JC}$	$R_{\theta JSP}$
	°C/W	°C/W	°C/W
2N2369A, L, 2N4449, L 2N3227, L	400	150	
2N2369AUA, UB, UBC, UBCN	486		210
2N4449UA, UB, UBC, UBCN	486		210
2N3227UA, UB, UBC, UBCN	486		210
2N2369AU, 2N4449U, 2N3227U	350 (6)		290 (7)

(1) Applicable for UA, UB, UBC, UBCN and U packages.
(2) For TO-18 and TO-46 packages derate linearly 2.06 mW/°C above T_A = +25°C. See figure 15.
(3) Derate linearly 4.8 mW/°C above T_C =+125°C.
(4) Power dissipation limited to 360 mW per chip regardless of thermal resistance.
(5) For UA, UB, UBC, and UBCN packages mounted on FR-4 PCB (1 Oz. Cu) with contacts 20 mils larger than package pads. See figure 16.
(6) One side only, derate linearly 2.857 mW/°C above T_{SP} = +25°C. See figure 17.
(7) Derate linearly 3.44 mW/°C above T_A = +54.5°C.
(8) For thermal impedance curves, see figure 9, figure 10, figure 11, figure 12, figure 13, and figure 14.

1.4 Primary electrical characteristics. Unless otherwise specified, T_A = +25°C.

Type (1)	h_{FE2} (2) V_{CE} = 0.4 V dc I_C = 30 mA dc		h_{FE4} (2) V_{CE} = 1.0 V dc I_C = 100 mA dc		$\|h_{FE}\|$ V_{CE} = 10 V dc I_C = 10 mA dc f = 100 MHz		$V_{CE(sat)1}$ I_C = 10 mA dc I_B = 1 mA dc	t_{on} I_C = 10 mA dc I_{B1} = 3 mA dc I_{B2} = -1.5 mA dc	t_{off} I_C = 10 mA dc I_{B1} = 3 mA dc I_{B2} = -1.5 mA dc	t_s I_C = 10 mA dc I_{B1} = I_{B2} = 10 mA dc
	Min	Max	Min	Max	Min	Max	V dc Max	ns	ns	ns
2N2369A	30	120	20	120	5.0	10	0.20	12	18	13
2N3227	40	250	30	150	5.0	10	0.20	12	25	18
2N4449	30	120	20	120	5.0	10	0.20	12	18	13

(1) Electrical characteristics for the A, L, AU, AUBC, U, UA, UB, and UBC suffix devices are identical to the corresponding non-suffix device.
(2) Pulsed (see 4.5.1).

1.5 Part or Identifying Number (PIN). The PIN is in accordance with MIL-PRF-19500, and as specified herein. See 6.5 for PIN construction example and 6.6 for a list of available PINs.

1.5.1 JAN certification mark and quality level designators.

1.5.1.1 Quality level designators for encapsulated devices. The quality level designators for encapsulated devices that are applicable for this specification sheet from the lowest to the highest level are as follows: "JAN", "JANTX", “JANTXV”, and "JANS".

1.5.1.2 Quality level designators for unencapsulated devices (die). The quality level designators for unencapsulated devices (die) that are applicable for this specification sheet from the lowest to the highest level are as follows: "JANHC" and "JANKC".

1.5.2 Radiation hardness assurance (RHA) designator. The RHA levels that are applicable for this specification sheet from lowest to highest for JANS quality levels are as follows: “E”, “K”, “U”, "M", "D", "P", "L", “R”, “F’, “G”, and “H”.

1.5.3 Device type. The designation system for the device types covered by this specification sheet are as follows.

1.5.3.1 First number and first letter symbols. The semiconductors of this specification sheet use the first number and letter symbols "2N".

1.5.3.2 Second number symbols. The second number symbols for the semiconductors covered by this specification sheet are as follows: "2369", “3227”, and “4449”.

1.5.4 Suffix symbols. The following suffix letters are incorporated in the PIN for this specification sheet.

	A blank first suffix symbol indicates encapsulated devices. Applicable for the 2N3227 and 2N4449 only (2N3227 see figure 1, TO-18) (2N4449 see figure2, TO-46).
A	Indicates an encapsulated device, applicable for the 2N2369A device only (see figure 1, TO-18).
L	Indicates a TO-18 (see figure 1) or a TO-46 (see figure 2) with a dimension LL range from 1.50 inches (38.10mm) minimum to 1.75 inches (44.45) maximum.
UB, UBC, and UBCN	Indicates a surface mount (2N2369AUB, 2N2369AUBC, 2N2369AUBCN 2N3227UB, 2N3227UBC, 2N3227UBCN, 2N4449UB, 2N4449UBC, and 2N4449UBCN) (see figure 3)
UA	Indicates a surface mount (2N2369AUA, 2N3227UA) (see figure 4).
U	Indicates a surface mount dual transistor (2N2369AU, 2N3227U) (see figure 5).

1.5.5 Lead finish. The lead finishes applicable to this specification sheet are listed on QML-19500.

1.5.6 Die identifiers for unencapsulated devices (manufacturers and critical interface identifiers). The manufacturer die identifiers that are applicable for this specification sheet are "A" and "B" (see figure 6, figure 7, figure 8, and 6.5.2).

	Dimensions				
Ltr.	in	in	mm	mm	Notes
	Min	Max	Min	Max	
CD	.178	.195	4.52	4.95	
CH	.170	.210	4.32	5.33	
HD	.209	.230	5.31	5.84	
LC	.100	TP	2.54	TP	5
LD	.016	.021	0.41	0.53	6, 7
LL	.500	.750	12.70	19.05	6, 7, 8
LU	.016	.019	0.41	0.48	6, 7
L_1		.050		1.27	6, 7
L_2	.250		6.35		6, 7
P	.100		2.54		4
Q		.030		0.76	4
TL	.028	.048	0.71	1.22	2, 3
TW	.036	.046	0.91	1.17	2
r		.010		0.25	10
α	45°	TP	45°	TP	5

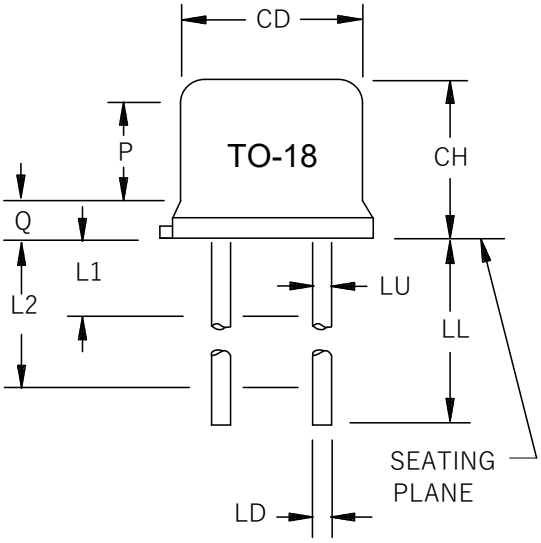

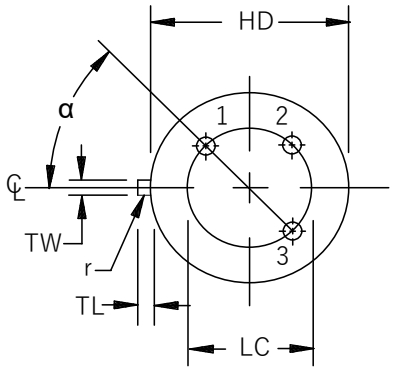

NOTES:

1. Dimension are in inches. Millimeters are given for general information only.
2. Beyond r (radius) maximum, TW shall be held for a minimum length of .011 (0.28 mm).
3. Dimension TL measured from maximum HD.
4. Body contour optional within zone defined by HD, CD, and Q.
5. Leads at gauge plane .054 +.001 -.000 inch (1.37 +0.03 -0.00 mm) below seating plane shall be within .007 inch (0.18 mm) radius of true position (TP) at maximum material condition (MMC) relative to tab at MMC.
6. Dimension LU applies between L_1 and L_2. Dimension LD applies between L_2 and LL minimum. Diameter is uncontrolled in L_1 and beyond LL minimum.
7. All three leads.
8. For "L" suffix devices, dimension LL = 1.5 inches (38.10 mm) minimum and 1.75 inches (44.45 mm) Maximum.
9. The collector shall be internally connected to the case.
10. Dimension r (radius) applies to both inside corners of tab.
11. Lead 1 = emitter, lead 2 = base, lead 3 = collector.

FIGURE 1. Physical dimensions TO-18 (2N2369A, L and 2N3227, L).

Ltr.	Dimensions				Notes
	in	in	mm	mm	
	Min	Max	Min	Max	
CD	.178	.195	4.52	4.95	
CH	.065	.085	1.65	2.16	
HD	.209	.230	5.31	5.84	
LC	.100 TP		2.54 TP		4
LD	.016	.021	0.41	0.53	
LL	.500	1.750	12.70	44.45	5, 10
LU	.016	.019	0.41	0.48	5
L_1		.050		1.27	5
L_2	.250		6.35		5
Q		.040		1.02	2
TL	.028	.048	0.71	1.22	7
TW	.036	.046	0.91	1.17	3
r		.010		0.25	8
α	45° TP		45° TP		4

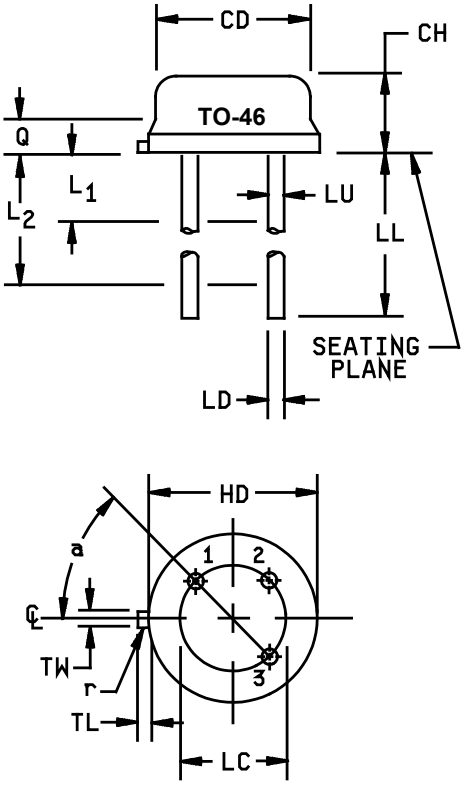

NOTES:

1. Dimensions are in inches. Millimeters are given for general information only.
2. Symbol TL is measured from HD maximum.
3. Details of outline in this zone are optional.
4. Leads at gauge plane .054 inch (1.37 mm) +.001 inch (0.03 mm) -.000 inch (0.00 mm) below seating plane shall be within .007 inch (0.18 mm) radius of TP relative to tab. Device may be measured by direct methods or by gauge.
5. Symbol LU applies between L_1 and L_2. Dimension LD applies between L_2 and LL minimum.
6. Lead number three is electrically connected to case.
7. Beyond r maximum, TW shall be held for a minimum length of .011 inch (0.28 mm).
8. Symbol r applied to both inside corners of tab.
9. Lead 1 is emitter, lead 2 is base, and lead 3 is collector.
10. For "L" suffix devices, dimension LL = 1.5 inches (38.10 mm) minimum and 1.75 inches (44.45 mm) Maximum.

FIGURE 2. Physical dimensions - TO-46 (2N4449, L).

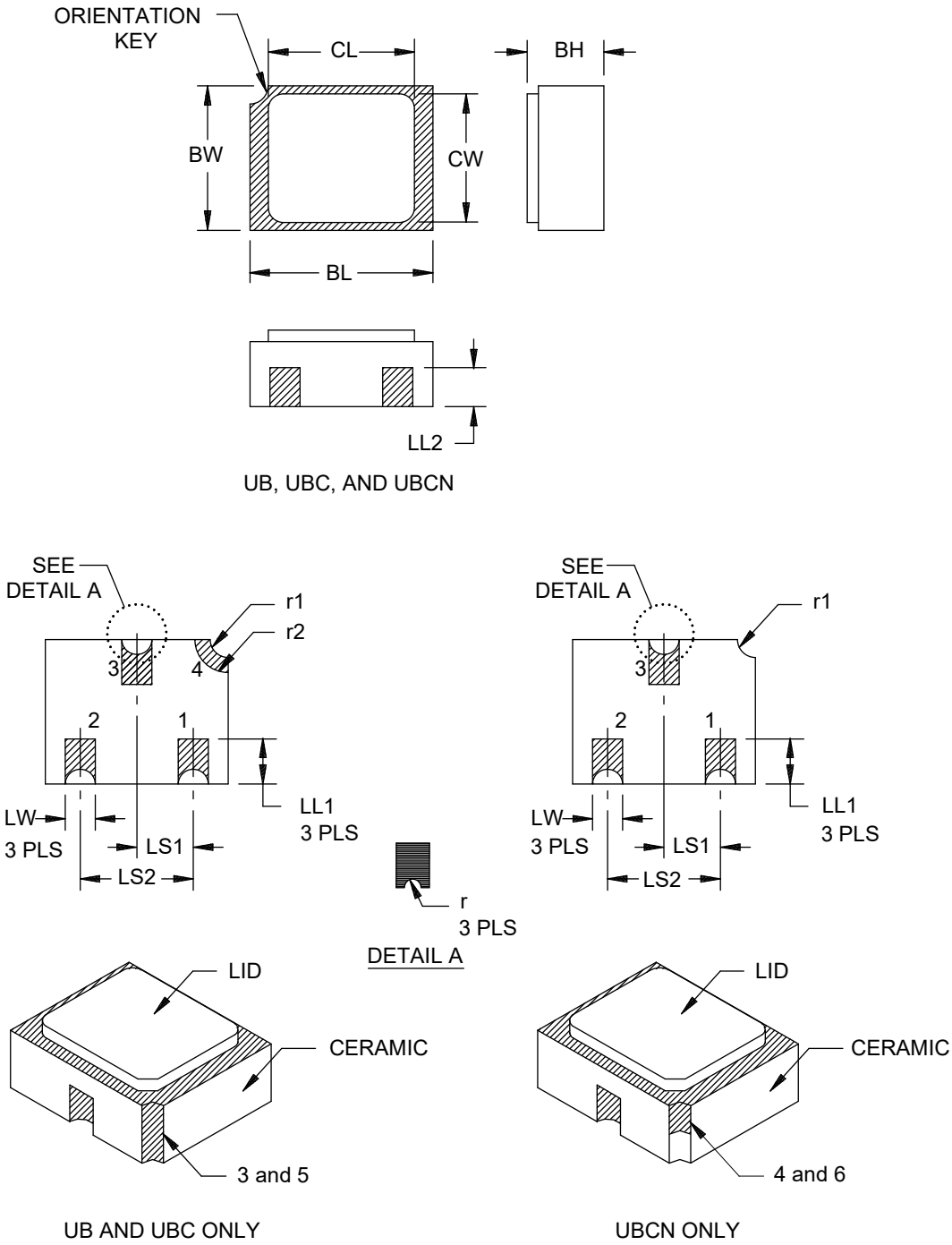

FIGURE 3. Physical dimensions, surface mount (UB, UBC, and UBCN versions).
(2N2369AUB, 2N3227UB, and 2N4449UB)

Symbol	Dimensions				Note
	in	in	mm	mm	
	Min	Max	Min	Max	
BL	.115	.128	2.92	3.25	
BW	.085	.108	2.16	2.74	
BH	.046	.056	1.17	1.42	UB only, 3
* BH	~~.055~~ .050	.069	1.40	1.75	UBC only, 4
* BH	~~.055~~ .050	.069	1.40	1.75	UBCN only, 5
CL		.128		3.25	
CW		.108		2.74	
LL1	.022	.038	0.56	0.97	3 places
LL2	.014	.035	0.356	0.889	3 places
LS_1	.035	.040	0.89	1.016	
LS_2	.071	.079	1.80	2.01	
LW	.016	.024	0.41	0.61	
r		.008		0.20	
r1		.012		0.30	6
r2		.022		0.56	UB and UBC only

NOTES:
1. Dimensions are in inches. Millimeters are given for general information only.
2. Hatched areas on package denote metallized areas.
3. UB only: Pad 1 = Base, Pad 2 = Emitter, Pad 3 = Collector, Pad 4 = connected to the lid braze ring.
4. UBC (ceramic lid) only: Pad 1 = Base, Pad 2 = Emitter, Pad 3 = Collector, Pad 4 = connected to the lid braze ring.
5. UBCN (ceramic lid) only: Pad 1 = Base, Pad 2 = Emitter, Pad 3 = Collector, Isolated lid with three pads only.
6. For design reference only.

FIGURE 3. Physical dimensions, surface mount (UB, UBC, and UBCN versions) - Continued.
(2N2369AUB, 2N3227UB, and 2N4449UB)

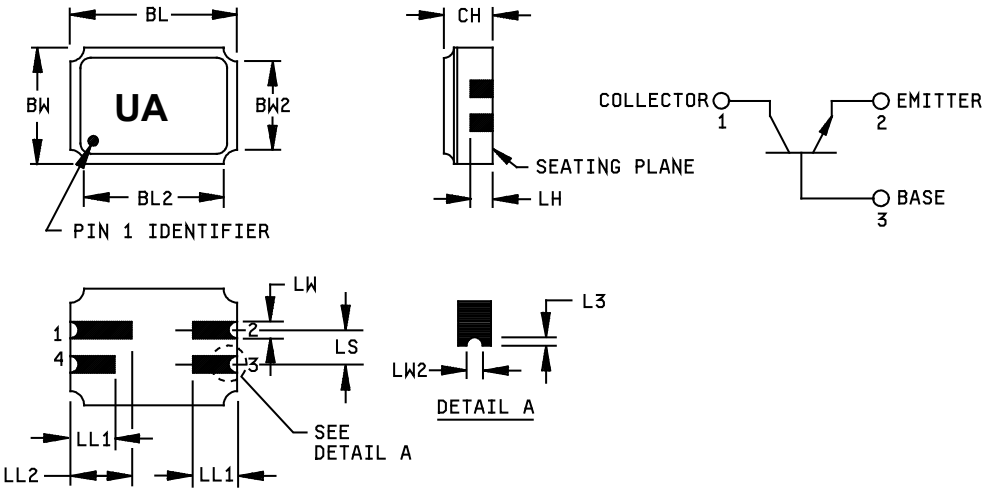

	Dimensions			
Ltr.	in	in	mm	mm
	Min	Max	Min	Max
BL	.215	.225	5.46	5.71
BL2		.225		5.71
BW	.145	.155	3.68	3.93
BW_2		.155		3.93
CH	.061	.075	1.55	1.90
L3	.003		0.08	
LH	.029	.042	0.74	1.07
LL_1	.032	.048	0.81	1.22
LL_2	.072	.088	1.83	2.23
LS	.045	.055	1.14	1.39
LW	.022	.028	0.56	0.71
LW2	.006	.022	0.15	0.56

Pin number.	1	2	3	4
Transistor	Collector	Emitter	Base	N/C

NOTES:

1. Dimensions are in inches.
2. Millimeters are given for general information only.
3. Dimension CH controls the overall package thickness. When a window lid is used, dimension CH must increase by a minimum of .010 inch (0.254 mm) and a maximum of .040 inch (1.020 mm).
4. The corner shape (square, notch, radius) may vary at the manufacturer's option, from that shown on the drawing.
5. Dimensions LW2 minimum and L3 minimum and the appropriate castellation length define an unobstructed three-dimensional space traversing all of the ceramic layers in which a castellation was designed. (Castellations are required on the bottom two layers, optional on the top ceramic layer.) Dimension LW2 maximum define the maximum width of the castellation at any point on its surface. Measurement of these dimensions may be made prior to solder dipping.
6. The co-planarity deviation of all terminal contact points, as defined by the device seating plane, shall not exceed .006 inch (0.15mm) for solder dipped leadless chip carriers.

FIGURE 4. Physical dimensions - surface mount (UA version, 2N2369AUA, 2N3227UA, and 2N4449UA).

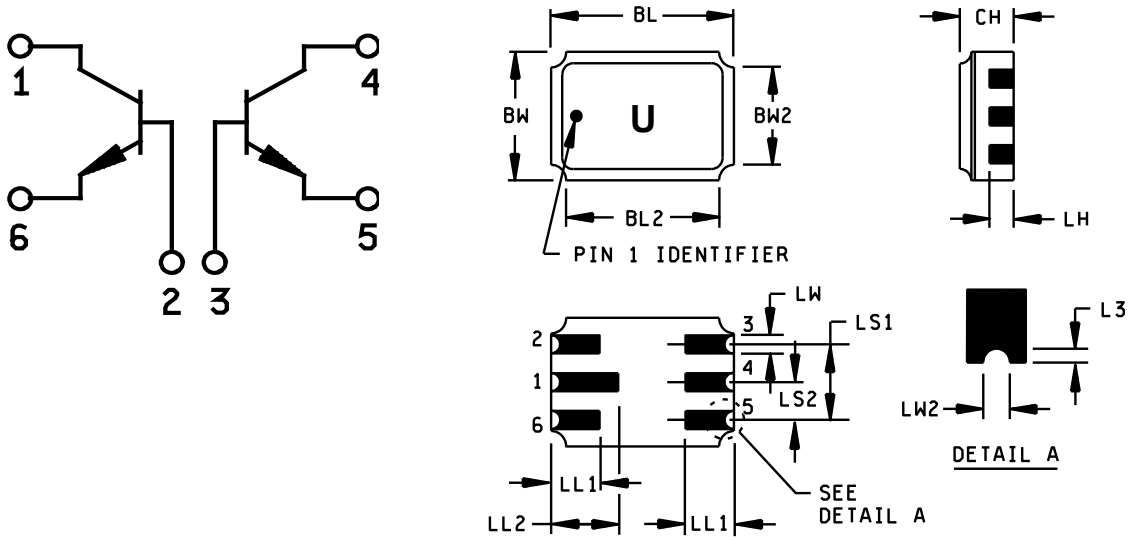

Ltr.	Dimensions			
	in	in	mm	mm
	Min	Max	Min	Max
BL	.240	.250	6.10	6.35
BL_2		.250		6.35
BW	.165	.175	4.19	4.44
BW_2		.175		4.44
CH	.066	.080	1.68	2.03
L_3	.003	.007	0.08	0.18
LH	.026	.039	0.66	0.99
LL_1	.060	.070	1.52	1.78
LL_2	.082	.098	2.08	2.49
LS_1	.095	.105	2.41	2.67
LS_2	.045	.055	1.14	1.39
LW	.022	.028	0.56	0.71
LW_2	.006	.022	0.15	0.56

Pin number	1	2	3	4	5	6
Transistor	Collector no. 1	Base no. 1	Base no. 2	Collector no. 2	Emitter no. 2	Emitter no. 1

NOTES:

1. Dimensions are in inches. Millimeters are given for general information only.
2. Dimension CH controls the overall package thickness. When a window lid is used, dimension CH must increase by a minimum of .010 inch (0.254 mm) and a maximum of .040 inch (1.020 mm).
3. The corner shape (square, notch, radius) may vary at the manufacturer's option, from that shown on the drawing.
4. Dimensions LW2 minimum and L3 minimum and the appropriate castellation length define an unobstructed three-dimensional space traversing all of the ceramic layers in which a castellation was designed. (Castellations are required on the bottom two layers, optional on the top ceramic layer.) Dimension LW2 maximum and L3 maximum define the maximum width and depth of the castellation at any point on its surface. Measurement of these dimensions may be made prior to solder dipping.
5. The co-planarity deviation of all terminal contact points, as defined by the device seating plane, shall not exceed .006 inch (0.15mm) for solder dipped leadless chip carriers.

FIGURE 5. Physical dimensions - surface mount (dual transistors, U version only, 2N2369AU, 2N3227U, and 2N4449U).

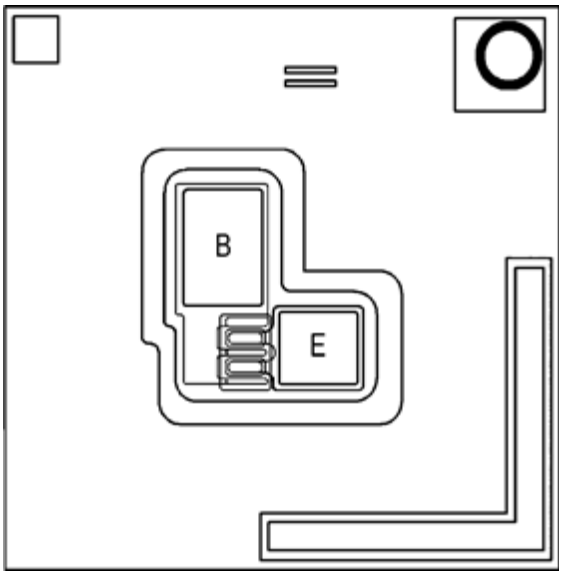

Die size:	.020 x .020 inch ±.002 inch.
Die thickness:	.010 ± .0015 inch nominal.
Top metal:	Aluminum 10,000Å minimum, 12,000Å nominal.
Back metal:	Gold 3,500Å minimum, 5,000Å nominal.
Backside:	Collector.
Bonding pad:	B = .004 x .0045 inch, E = .0045 x .005 inch.

FIGURE 6. JANHC and JANKC A-version die dimensions - 2N2369A.

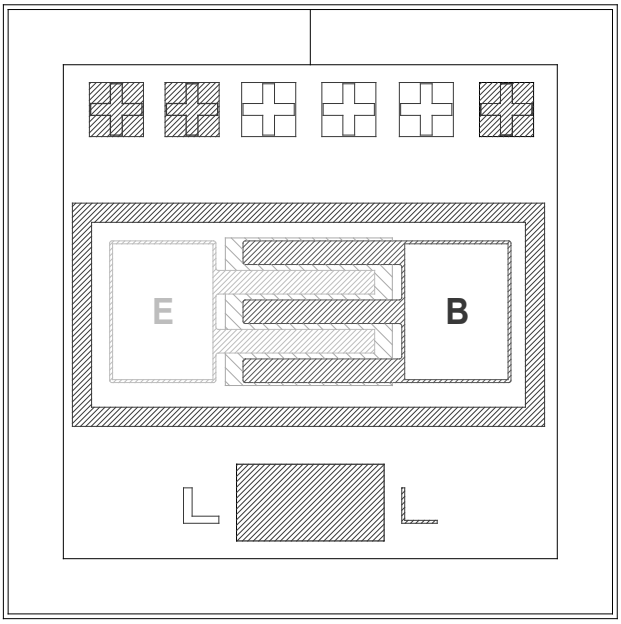

Die size:	.016 inch x .016 inch.
Die thickness:	.008 inch ±.0016 inch.
Base pad:	.0036 inch x .0028 inch.
Emitter pad:	.0036 inch x .0028 inch.
Back metal:	Gold, 6,500 ±1,950 Å.
Top metal:	Aluminum, 17,500 ±2,500 Å.
Back side:	Collector.
Glassivation:	SiO_2, 7,500 ±1,500 Å.

FIGURE 7. JANHC and JANKC B-version die dimensions - 2N2369A, 2N3227.

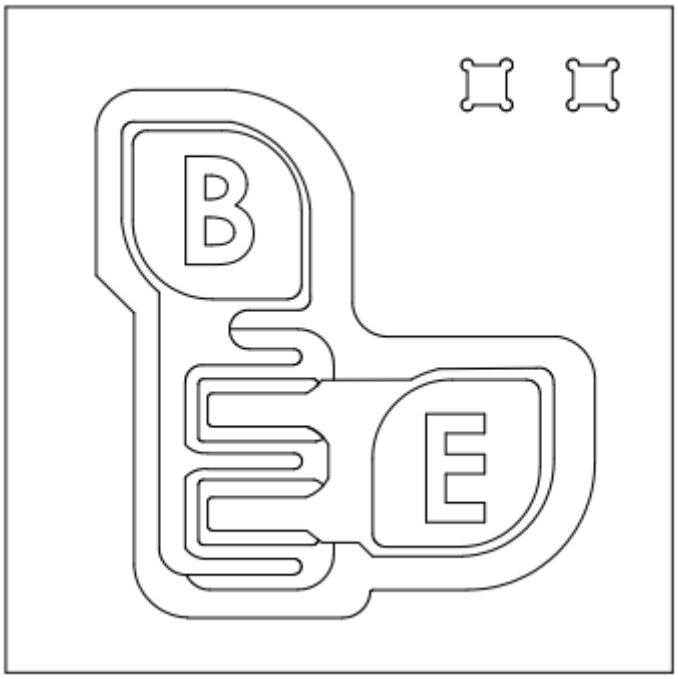

Die size:	.013 x .013 inch ±.002 inch.
Die thickness:	.008 ± .0015 inch nominal.
Base pad:	.003 inch x .003 inch.
Emitter pad:	.003 inch x .003 inch.
Back metal:	Gold, 10,000 minimum, 12,000Å nominal.
Top metal:	Aluminum 18,000Å minimum, 20,000Å nominal.
Back side:	Collector.

FIGURE 8. JANHC and JANKC C-version die dimensions - 2N2369A, and 2N3227.

1.6 Radiation features. The following radiation features are applicable for RHA devices supplied to this specification sheet.

1.6.1 Maximum total ionizing dose (TID). The maximum TID that RHA devices were tested to in accordance with condition A (dose rate = 50 to 300 rad(Si)/s) of method 1019 of MIL-STD-750 are as follows:

For device type 2N3227U, 2N4449U, 2N4449UA, 2N4449UB: ..... 100 krad(Si) 1/

For device type 2N2369AU: ..... 300 krad(Si) 1/

For device type 2N2369A, 2N2369AUA, 2N2369AUB, 2N2369AUBC: ..... 1000 krad(Si) 1/

1.6.2 Maximum total ionizing dose (TID). The maximum TID that RHA devices were tested to in accordance with condition D (dose rate ≤ 10 mrad(Si)/s) of method 1019 of MIL-STD-750 are as follows:

For device type 2N2369A, 2N3227, 2N4449: ..... 100 krad(Si) 2/

1/ The manufacturers supplying these device types have performed characterization testing in accordance with condition A (dose rate = 50 to 300 rad(Si)/s) of method 1019 of MIL-STD-750. The radiation end point limits are guaranteed only to a maximum TID level of 1000 krad(Si).
2/ The manufacturers supplying these device types have performed characterization testing in accordance with condition D (dose rate ≤ 10 mrad(Si)/s) of method 1019 of MIL-STD-750. The radiation end point limits are guaranteed only to a maximum TID level of 100 krad(Si).

* 2. APPLICABLE ~~DOCUMENTS~~ PUBLICATIONS

* 2.1 General. The ~~documents~~ publications listed in this section are specified in sections 3 and 4 of this specification. This section does not include ~~documents~~ publications cited in other sections of this specification or recommended for additional information or as examples. While every effort has been made to ensure the completeness of this list, document users are cautioned that they must meet all specified requirements of ~~documents~~ publications cited in sections 3 and 4 of this specification, whether or not they are listed.

* 2.2 Government ~~documents~~ publications.

* 2.2.1 Specifications, standards, and handbooks. The following specifications, standards, and handbooks form a part of this document to the extent specified herein. Unless otherwise specified, the issues of these ~~documents~~ publications are those cited in the solicitation or contract.

DEPARTMENT OF DEFENSE SPECIFICATIONS

MIL-PRF-19500 - Semiconductor Devices, General Specification for.

DEPARTMENT OF DEFENSE STANDARDS

MIL-STD-750 - Test Methods for Semiconductor Devices.

(Copies of these documents are available online at https://quicksearch.dla.mil.)

2.3 Order of precedence Unless otherwise noted herein or in the contract, in the event of a conflict between the text of this document and the references cited herein, the text of this document takes precedence. Nothing in this document, however, supersedes applicable laws and regulations unless a specific exemption has been obtained.

3. REQUIREMENTS

3.1 General. The individual item requirements shall be as specified in MIL-PRF-19500 and as modified herein.

3.2 Qualification. Devices furnished under this specification shall be products that are manufactured by a manufacturer authorized by the qualifying activity for listing on the applicable qualified manufacturer's list (QML-19500) before contract award (see 4.2 and 6.3).

3.3 Abbreviations, symbols, and definitions. Abbreviations, symbols, and definitions used herein shall be as specified in MIL-PRF-19500.

3.4 Interface and physical dimensions. Interface and physical dimensions shall be as specified in MIL-PRF-19500, and herein. The device package styles shall be as follows: Three pin metal can (similar to TO-18) in accordance with figure 1, three pin metal can (similar to TO-46) in accordance with figure 2, three and four pad surface mount case outlines UB, UBC, and UBCN in accordance with figure 3, four pad surface mount case outline UA in accordance figure 4, six pad surface mount case outline U in accordance figure 5 and unencapsulated die in accordance with figure 6, figure 7, and figure 8, for device types JANHC and JANKC.

3.4.1 Lead finish. Lead finish shall be solderable in accordance with MIL-PRF-19500, MIL-STD-750, and herein. Where a choice of lead finish is desired, it shall be specified in the acquisition document (see 6.2).

3.4.2 Pin-out. The pin-out of the device shall be as shown in the case outline figures herein.

3.5 Radiation hardness assurance (RHA). Radiation hardness assurance requirements and test levels shall be as defined in MIL-PRF-19500.

3.6 Electrical performance characteristics. Unless otherwise specified herein, the electrical performance characteristics are as specified in 1.3, 1.4, and table I herein. When a particular device is specified, the limit applies to all package types (e.g., 2N2369A, 2N2369AL, 2N2369AU, 2N2369AUA, 2N2369AUB, 2N2369AUBC, and 2N2369AUBCN).

3.7 Electrical test requirements. The electrical test requirements shall be specified in table I. When a particular device is specified, the limit applies to all package types (e.g., 2N2369A, 2N2369AL, 2N2369AU, 2N2369AUA, 2N2369AUB, and 2N2369AUBC).

3.8 Marking. Marking shall be in accordance with MIL-PRF-19500, except for the UB, UBC, and UBCN suffix package. Marking on the UB package shall consist of an abbreviated part number, the date code, and the manufacturers symbol or logo. The prefixes JAN, JANTX, JANTXV, and JANS can be abbreviated as J, JX, JV, and JS respectively. The "2N" prefix and the "AUB" suffix may also be omitted. The radiation hardened designator E, K, U, M, D, P, L, R, F, G, or H shall immediately precede (or replace) the device “2N” identifier (depending upon degree of abbreviation required).

3.9 Workmanship. Switching transistor devices shall be processed in such a manner as to be uniform in quality and shall be free from other defects that will affect life, serviceability, or appearance.

4. VERIFICATION

4.1 Classification of inspections. The inspection requirements specified herein are classified as follows:

a. Qualification inspection (see 4.2).

b. Screening (see 4.3).

c. Conformance inspection (see 4.4 and table I. table II, table III, and table IV).

4.2 Qualification inspection. Qualification inspection shall be in accordance with MIL-PRF-19500 and as specified herein.

4.2.1 Group E qualification. Group E inspection shall be performed for qualification or re-qualification only. In case qualification was awarded to a prior revision of the specification sheet that did not request the performance of table IV tests, the tests specified in table IV herein that were not performed in the prior revision shall be performed on the first inspection lot of this revision to maintain qualification.

4.3 Screening.

4.3.1 Screening (JANS, JANTX, and JANTXV only). Screening shall be in accordance with table E-VI of MIL-PRF-19500, and as specified herein. The following measurements shall be made in accordance with table I herein. Devices that exceed the limits of table I herein shall not be acceptable.

Screen	Measurements for JANS level	Measurements for JANTX and JANTXV levels
(1) 3c	Thermal impedance (see 4.3.1.3)	Thermal impedance (see 4.3.1.3)
9	I_{CES} and h_{FE3}	Not applicable
11	I_{CES}; h_{FE3}; ΔI_{CES} = 100 percent of initial value or 25 nA dc, whichever is greater. Δh_{FE3} = ±15 percent of initial value.	I_{CES}, h_{FE3}
12	See 4.3.1.1	See 4.3.1.1
13	Subgroups 2 and 3 of table I herein; ΔI_{CES} = 100 percent of initial value or 25 nA dc, whichever is greater; Δh_{FE3} = ±15 percent of initial value.	Subgroup 2 of table I herein; ΔI_{CES} = 100 percent of initial value or 25 nA dc, whichever is greater; Δh_{FE3} = ±15 percent of initial value.

(1) Shall be performed anytime after temperature cycling, screen 3a; JANTX and JANTXV do not need to be repeated in screening requirements.

4.3.1.1 Power burn-in conditions. Power burn-in conditions are as follows: V_{CE} = 5 - 15 V dc, P_D = 360 mW (500 mW for U), T_A = room ambient as defined in 4.5 of MIL-STD-750. With approval of the qualifying activity and preparing activity, alternate burn-in criteria (hours, bias conditions, T_J, mounting conditions) may be used for JANTX and JANTXV quality levels. A justification demonstrating equivalence is required. In addition, the manufacturing site's burn-in data and performance history will be essential criteria for burn-in modification approval.

4.3.1.2. Screening of unencapsulated die (JANHC and JANKC). Screening of JANHC and JANKC die shall be in accordance with appendix G of MIL-PRF-19500. Burn-in duration for the JANKC level follows JANS requirements; the JANHC follows JANTX requirements.

4.3.1.3 Thermal impedance (ΔV_{BE} measurements). The ΔV_{BE} measurements shall be performed in accordance with method 3131 of MIL-STD-750 using the guidelines in that method for determining V_H, V_{CE}, I_M, I_H, t_H, t_{SW}, and t_{MD}. The ΔV_{BE} limit used in screen 3c of 4.3 herein and table I, subgroup 2 shall be set statistically by the supplier over several die lots and submitted to the qualifying activity for approval. See table IV, group E, subgroup 4 and figure 9, figure 10, figure 11, figure 12, figure 13 and figure 14 herein.

4.4 Conformance inspection. Conformance inspection shall be in accordance with MIL-PRF-19500, and as specified herein. If alternate screening is being performed in accordance with MIL-PRF-19500, a sample of screened devices shall be submitted to and pass the requirements of group A1 and A2 inspection only (table E-VIb, group B, subgroup 1 is not required to be performed again if group B has already been satisfied in accordance with 4.4.2).

4.4.1 Group A inspection. Group A inspection shall be conducted in accordance with MIL-PRF-19500, and table I herein.

4.4.2 Group B inspection. Group B inspection shall be conducted in accordance with the tests and conditions specified for subgroup testing in table E-VIa (JANS) of MIL-PRF-19500 and 4.4.2.1. See 4.4.2.2 for JAN, JANTX, and JANTXV group B testing. Delta measurements shall be in accordance with table III herein.

4.4.2.1 Group B inspection, table E-VIa (JANS) of MIL-PRF-19500. Group B inspection shall be conducted in accordance with the tests and conditions specified for subgroup testing in table E-VIA (JANS) of MIL-PRF-19500. Delta requirements only apply to subgroups B4, and B5 and shall be in accordance with table III herein.

Subgroup	Method	Condition
B4	1037	V_{CB} = 12 V dc, t_{ON} = t_{OFF} = 3 minutes, $P_{D(ON)}$ = P_D max rated, see 1.3; $P_{D(OFF)}$ = 0.
B5	1027	V_{CB} = 12 V dc. $P_D \geq$ 100 percent of maximum rated P_T (see 1.3). Option 1: 96 hrs min, Sample size in accordance with table E-VIa of MIL-PRF-19500, adjust T_A to achieve T_J = +275°C minimum. Option 2: 216 hrs min., sample size = 45, c = 0; adjust T_A to achieve T_J = +225°C minimum. (NOTE: If a failure occurs, resubmission shall be at the test conditions of the original sample.)

4.4.2.2 Group B inspection, (JAN, JANTX, and JANTXV) Separate samples may be used for each step. In the event of a group B failure, the manufacturer may pull a new sample at double the sample size from either the failed assembly lot or from another assembly lot from the same wafer lot. If the new assembly lot option is exercised, the failed assembly lot shall be scrapped. Delta requirements for JAN, JANTX, and JANTXV shall be after each step and shall be in accordance with table III herein.

Step	Method	Condition
1	1026	Steady-state life: 1,000 hours at V_{CB} = 10 V dc; Maximum rated power (see 1.3) shall be applied to the device and ambient temperature shall be adjusted to achieve $T_J \geq$ +150°C. n = 45, c = 0. The sample size may be increased and the test time decreased as long as the devices are stressed for a total of 45,000 device hours minimum and the actual time of test is at least 340 hours.
2	1048	Blocking life: T_A = +150°, V_{CB} = 80 percent of rated voltage, 48 hours minimum. n = 45 devices, c = 0.
3	1032	High-temperature life (non-operating), t = 340 hours, T_A = +200°C. n = 22, c = 0.

4.4.2.3 Group B sample selection. Samples selected from group B inspection shall meet all of the following requirements:

a. For JAN, JANTX, and JANTXV samples shall be selected randomly from a minimum of three wafers (or from each wafer in the lot) from each wafer lot. For JANS, samples shall be selected from each inspection lot. See MIL-PRF-19500.

b. Shall be chosen from an inspection lot that has been submitted to and passed group A, subgroup 2, conformance inspection. When the final lead finish is solder or any plating prone to oxidation at high temperature, the samples for life test (subgroups B4 and B5 for JANS, and group B for JAN, JANTX, and JANTXV) may be pulled prior to the application of final lead finish.

4.4.3 Group C inspection. Group C inspection shall be conducted in accordance with the tests and conditions specified for subgroup testing in table E-VII of MIL-PRF-19500, and in 4.4.3.1 (JANS) and 4.4.3.2 (JAN, JANTX, and JANTXV) herein for group C testing. Delta measurements shall be in accordance with table III herein.

4.4.3.1 Group C inspection,-table E-VII (JANS) of MIL-PRF-19500.

Subgroup	Method	Condition
C2	2036	Test condition E; not applicable for U, UA, UB, UBC, and UBCN devices.
C6	1026	1,000 hours at V_{CB} = 5 - 15 V dc. Maximum rated power (see 1.3) shall be applied to the device and ambient temperature shall be adjusted to achieve $T_J \geq +150°C$. The sample size may be increased and the test time decreased as long as the devices are stressed for a total of 45,000 device hours minimum, and the actual time of test is at least 340 hours. n = 45, c = 0.

4.4.3.2 Group C inspection, table E-VII (JAN, JANTX, and JANTXV) of MIL-PRF-19500.

Subgroup	Method	Condition
C2	2036	Test condition E; not applicable for U, UA, UB, UBC, and UBCN devices.
C6		Not applicable.

4.4.3.3 Group C sample selection. Samples for subgroups in group C shall be chosen at random from any inspection lot containing the intended package type and lead finish procured to the same specification which is submitted to and passes group A tests for conformance inspection. When the final lead finish is solder or any plating prone to oxidation at high temperature, the samples for C6 life test may be pulled prior to the application of final lead finish. Testing of a subgroup using a single device type enclosed in the intended package type shall be considered as complying with the requirements for that subgroup.

4.4.4 Group D inspection. Conformance inspection for hardness assured JANS and JANTXV types shall include the group D tests specified in table II herein. These tests shall be performed as required in accordance with MIL-PRF-19500 and method 1019 of MIL-STD-750, for total ionizing dose or method 1017 of MIL-STD-750 for neutron fluence as applicable (see 6.2 herein), except group D, subgroup 2 may be performed separate from other subgroups. Alternate package options may also be substituted for the testing provided there is no adverse effect to the fluence profile.

4.4.5 Group E inspection. Group E inspection shall be conducted in accordance with the conditions specified for subgroup testing in appendix E, table E-IX of MIL-PRF-19500 and as specified in table IV herein. Delta requirements shall be in accordance with table III herein.

4.5 Methods of inspection. Methods of inspection shall be as specified in the appropriate tables and as follows.

4.5.1 Pulse measurements. Conditions for pulse measurement shall be as specified in section 4 of MIL-STD-750.

4.5.2 Input capacitance. This test shall be conducted in accordance with method 3240 of MIL-STD-750, except the output capacitor shall be omitted.

4.5.3 Displacement damage characterization. For RHA devices, each supplier shall perform a displacement damage characterization. The characterization shall demonstrate exposure versus data and does not indicate pass or fail criteria. The exposure shall be conducted in accordance with method 1017 of MIL-STD-750. The following details shall apply:

a. Samples may be taken from any wafer of the qualification lot.

b. As a minimum, testing shall be at 2E+12 n/cm^2 plus two additional fluence levels chosen by the manufacturer.

c. If the device degrades less than 5 percent of the specification at the highest fluence level, a single data point may be sufficient.

Alternate package options may be substituted for characterization. The displacement damage characterization data shall be made available from the manufacturer.

TABLE I. Group A inspection.

Inspection 1/ 2/	MIL-STD-750		Symbol	Limit	Limit	Unit
	Method	Conditions		Min	Max	
Subgroup 1 3/						
Visual and mechanical 4/ examination	2071					
Solderability 4/ 5/	2026	n = 15 leads, c = 0				
Resistance to solvents 4/ 5/ 6/	1022	n = 15 devices, c = 0				
Temp cycling 4/ 5/	1051	Test condition C, 25 cycles. n = 22 devices, c = 0				
Hermetic seal 5/	1071	n = 22 devices, c = 0				
Fine leak		Test conditions G or H				
Gross leak						
Electrical measurements 5/		Table I, subgroup 2				
Bond strength 4/ 5/	2037	Precondition T_A = +250°C at t = 24 hrs or T_A = 300°C at t = 2 hrs; n = 11 wires, c = 0				
Decap internal visual 5/	2075	n = 4 devices, c = 0				
Subgroup 2						
Thermal impedance 7/	3131	See 4.3.1.3	ΔV_{BE}			mV
Collector to base cutoff current	3036	Bias condition D; V_{CB} = 40 V dc	I_{CBO1}		10	µA dc
Emitter to base cutoff current	3061		I_{EBO1}		10	µA dc
2N2369A, 2N4449		Bias condition D; V_{EB} = 4.5 V dc				
2N3227		Bias condition D; V_{EB} = 6.0 V dc				
Breakdown voltage, collector to emitter	3011	Bias condition D; I_C = 10 mA dc; pulsed (see 4.5.1)	$V_{(BR)CEO}$			
2N2369A, 2N4449				15		V dc
2N3227				20		V dc
Collector to emitter cutoff current	3041	Bias condition C; V_{CE} = 20 V dc	I_{CES}		0.4	µA dc
Collector to base cutoff current	3036	Bias condition D; V_{CB} = 32 V dc	I_{CBO2}		0.2	µA dc
Emitter to base cutoff current	3061	Bias condition D; V_{EB} = 4 V dc	I_{EBO2}		0.25	µA dc

See footnotes at end of table.

TABLE I. Group A inspection - Continued.

Inspection 1/ 2/	MIL-STD-750		Symbol	Limit	Limit	Unit
	Method	Conditions		Min	Max	
Subgroup 2 - Continued						
Forward-current transfer ratio	3076	V_{CE} = 0.35 V dc; I_C = 10 mA dc pulsed (see 4.5.1).	h_{FE1}			
2N2369A, 2N4449,				40	120	
2N3227				70	250	
Forward-current transfer ratio	3076	V_{CE} = 0.4 V dc; I_C = 30 mA dc pulsed (see 4.5.1).	h_{FE2}			
2N2369A, 2N4449				30	120	
2N3227				40	250	
Forward-current transfer ratio	3076	V_{CE} = 1.0 V dc; I_C = 10 mA dc pulsed (see 4.5.1).	h_{FE3}			
2N2369A, 2N4449				40	120	
2N3227				75	300	
Forward-current transfer ratio	3076	V_{CE} = 1.0 V dc; I_C = 100 mA dc; pulsed (see 4.5.1).	h_{FE4}			
2N2369A, 2N4449				20	120	
2N3227				30	150	
Collector-emitter saturation voltage	3071	I_C = 10 mA dc; I_B = 1.0 mA dc pulsed (see 4.5.1).	$V_{CE(sat)1}$		0.20	V dc
Collector-emitter saturation voltage	3071	I_C = 30 mA dc; I_B = 3.0 mA dc; pulsed (see 4.5.1).	$V_{CE(sat)2}$		0.25	V dc
Collector-emitter saturation voltage	3071	I_C = 100 mA dc; I_B = 10 mA dc; pulsed (see 4.5.1).	$V_{CE(sat)3}$		0.45	V dc
Base-emitter saturation voltage	3066	Test condition A; I_C = 10 mA dc; I_B = 1.0 mA dc; pulsed (see 4.5.1).	$V_{BE(sat)1}$	0.70	0.85	V dc
Base-emitter saturation voltage	3066	Test condition A; I_C = 30 mA dc; I_B = 3.0 mA dc; pulsed (see 4.5.1).	$V_{BE(sat)2}$		0.90	V dc
Base-emitter saturation voltage	3066	Test condition A; I_C = 100 mA dc; I_B = 10 mA dc; pulsed (see 4.5.1).	$V_{BE(sat)3}$	0.80	1.20	V dc

See footnotes at end of table.

TABLE I. Group A inspection - Continued.

Inspection 1/ 2/	MIL-STD-750		Symbol	Limit	Limit	Unit
	Method	Conditions		Min	Max	
Subgroup 3						
High temperature operation		T_A = +150°C				
Collector to base cutoff current	3036	Bias condition D; V_{CB} = 20 V dc	I_{CBO2}		30	µA dc
High temperature operation		T_A = +125°C				
Collector to emitter cutoff current	3041	Bias condition A; V_{CE} = 10 V dc; V_{BE} = 0.25 V dc	I_{CEX2}		30	µA dc
Collector - emitter voltage saturated	3071	I_C = 10 mA dc I_B = 1.0 mA dc	$V_{CE(sat)4}$		0.3	V dc
Base - emitter saturated voltage	3066	Test condition A; I_C = 10 mA dc; I_B = 1.0 mA dc	$V_{BE(sat)4}$			
2N2369A, 2N4449				0.59		V dc
2N3227				0.50		V dc
Low temperature operation		T_A = -55°C				
Forward-current transfer ratio	3076	V_{CE} = 1.0 V dc; I_C = 10 mA dc pulsed (see 4.5.1)	h_{FE5}			
2N2369A, 2N4449				20		
2N3227				40		
Base - emitter saturated voltage	3066	Test condition A; I_C = 10 mA dc; I_B = 1.0 mA dc	$V_{BE(sat)5}$		1.02	V dc
Subgroup 4						
Magnitude of small-signal short-circuit forward current transfer ratio	3306	V_{CE} = 10 V dc; I_C = 10 mA dc; f = 100 MHz	$\lvert h_{fe} \rvert$	5.0	10	
Open circuit output capacitance	3236	V_{CB} = 5 V dc; I_E = 0; 100 kHz ≤ f ≤ 1 MHz	C_{obo}		4.0	pF
Input capacitance (output open-circuited)	3240	V_{EB} = 0.5 V dc; I_C = 0; 100 kHz ≤ f ≤ 1 MHz	C_{ibo}			
2N2369A, 2N4449					5.0	pF
2N3227					4.0	pF

TABLE I. Group A inspection - Continued.

Inspection 1/ 2/	MIL-STD-750		Symbol	Limit	Limit	Unit
	Method	Conditions		Min	Max	
Subgroup 4 Continued						
Charge storage time		I_C = 10 mA dc; I_{B1} = 10 mA dc; I_{B2} = 10 mA dc; (see figure 18)	t_S			
2N2369A, 2N4449					13	ns
2N3227					18	ns
Turn-on time		I_C = 10 mA dc; I_{B1} = 3.0 mA dc; I_{B2} = -1.5 mA dc; (see figure 19)	t_{on}		12	ns
Turn-off time		I_C = 10 mA dc; I_{B1} = 3.0 mA dc; I_{B2} = -1.5 mA dc; (see figure 19)	t_{off}			
2N2369A, 2N4449					18	ns
2N3227					25	ns

1/ For sampling (unless otherwise specified) plan see MIL-PRF-19500.
2/ Electrical characteristics for the A, L, AU, AUBC, U, UA, UB, UBC, and UBCN suffix devices are identical to the corresponding non-suffix device.
3/ For resubmission of failed subgroup 1, double the sample size of the failed test or sequence of tests. A failure in table I, subgroup 1 shall not require retest of the entire subgroup. Only the failed test shall be rerun upon submission.
4/ Separate samples may be used.
5/ Not required for JANS devices.
6/ Not required for laser marked devices.
7/ For end-point measurements, this test is required for the following subgroups:
Group B, subgroups 3, 4, and 5 (JANS).
Group B, steps 2 and 3 (JAN, JANTX, and JANTXV).
Group C, subgroup 2 and 6.
Group E, subgroup 1.

TABLE II. Group D inspection.

Inspection 1/ 2/ 3/	MIL-STD-750		Symbol	Limit	Limit	Unit
	Method	Conditions		Min	Max	
Subgroup 1 4/						
Neutron irradiation	1017	Neutron exposure V_{CES} = 0V				
Collector to base cutoff current	3036	Bias condition D; V_{CB} = 40 V dc	I_{CBO1}		20	µA dc
Emitter to base cutoff current 2N2369A, 2N4449 2N3227	3061	 Bias condition D; V_{EB} = 4.5 V dc Bias condition D; V_{EB} = 6.0 V dc	I_{EBO1}		20	µA dc
Breakdown voltage, collector to emitter 2N2369A, 2N4449 2N3227	3011	Bias condition D; I_C = 10 mA dc; pulsed (see 4.5.1)	$V_{(BR)CEO}$	 15 20		 V dc V dc
Collector to emitter cutoff current	3041	Bias condition C; V_{CE} = 20 V dc	I_{CES}		0.8	µA dc
Collector to base cutoff current	3036	Bias condition D; V_{CB} = 32 V dc	I_{CBO2}		0.4	µA dc
Emitter to base cutoff current	3061	Bias condition D; V_{EB} = 4 V dc	I_{EBO2}		0.50	µA dc
Forward-current transfer ratio	3076	V_{CE} = 0.35 V dc; I_C = 10 mA dc pulsed (see 4.5.1).	[h_{FE1}] 5/			
M through H2N2369A, 2N4449 M through H2N3227				[20] [35]	120 250	
Forward-current transfer ratio M through H2N2369A, 2N4449 M through H2N3227	3076	V_{CE} = 0.4 V dc; I_C = 30 mA dc, pulsed (see 4.5.1).	[h_{FE2}] 5/	 [15] [20]	 120 250	
Forward-current transfer ratio M through H2N2369A, 2N4449 M through H2N3227	3076	V_{CE} = 1.0 V dc; I_C = 10 mA dc, pulsed (see 4.5.1).	[h_{FE3}] 5/	 [20] [37.5]	 120 300	

See footnotes at end of table.

TABLE II. Group D inspection - Continued.

Inspection 1/ 2/ 3/	MIL-STD-750		Symbol	Limit	Limit	Unit
	Method	Conditions		Min	Max	
Subgroup 1 4/ - Continued.						
Forward-current transfer ratio	3076	V_{CE} = 1.0 V dc; I_C = 100 mA dc pulsed (see 4.5.1).	[h_{FE4}] 5/			
E through H2N2369A, 2N4449				[10]	120	
E through H2N3227				[15]	150	
Collector-emitter saturation voltage	3071	I_C = 10 mA dc; I_B = 1 mA dc pulsed (see 4.5.1).	$V_{CE(sat)1}$		0.23	V dc
Collector-emitter saturation voltage	3071	I_C = 30 mA dc; I_B = 3.0 mA dc pulsed (see 4.5.1).	$V_{CE(sat)2}$		0.29	V dc
Collector-emitter saturation voltage	3071	I_C = 100 mA dc; I_B = 10 mA dc pulsed (see 4.5.1).	$V_{CE(sat)3}$		0.52	V dc
Base-emitter saturation voltage	3066	Test condition A; I_C = 10 mA dc; I_B = 1.0 mA dc; pulsed (see 4.5.1).	$V_{BE(sat)1}$	0.70	0.98	V dc
Base-emitter saturation voltage	3066	Test condition A; I_C = 30 mA dc; I_B = 3.0 mA dc; pulsed (see 4.5.1).	$V_{BE(sat)2}$		1.04	V dc
Base-emitter saturation voltage	3066	Test condition A; I_C = 100 mA dc; I_B = 10 mA dc; pulsed (see 4.5.1).	$V_{BE(sat)3}$	0.80	1.38	V dc
Subgroup 2						
Total dose irradiation	1019	Gamma exposure Condition A for High dose rate, or Condition D for low dose rate.				
E through H2N2369A, 2N4449		V_{CES} = 12 V				
E through H2N3227		V_{CES} = 16 V				
Collector to base cutoff current	3036	Bias condition D; V_{CB} = 40 V dc	I_{CBO1}		20	µA dc

See footnotes at end of table.

TABLE II. Group D inspection - Continued.

Inspection 1/ 2/ 3/	MIL-STD-750		Symbol	Limit	Limit	Unit
	Method	Conditions		Min	Max	
Subgroup 2 - Continued.						
Emitter to base cutoff current	3061		I_{EBO1}		20	µA dc
2N2369A, 2N4449		Bias condition D; V_{EB} = 4.5 V dc				
2N3227		Bias condition D; V_{EB} = 6.0 V dc				
Breakdown voltage, collector to emitter	3011	Bias condition D; I_C = 10 mA dc; pulsed (see 4.5.1)	$V_{(BR)CEO}$			
2N2369A, 2N4449				15		V dc
2N3227				20		V dc
Collector to emitter cutoff current	3041	Bias condition C; V_{CE} = 20 V dc	I_{CES}		0.8	µA dc
Collector to base cutoff current	3036	Bias condition D; V_{CB} = 32 V dc	I_{CBO2}		0.4	µA dc
Emitter to base cutoff current	3061	Bias condition D; V_{EB} = 4 V dc	I_{EBO2}		0.50	µA dc
Forward-current transfer ratio	3076	V_{CE} = 0.35 V dc; I_C = 10 mA dc. pulsed(see 4.5.1).	[h_{FE1}] 5/			
E through H2N2369A, 2N4449				[20]	120	
E through H2N3227				[35]	250	
Forward-current transfer ratio	3076	V_{CE} = 0.4 V dc; I_C = 30 mA dc. pulsed(see 4.5.1).	[h_{FE2}] 5/			
E through H2N2369A, 2N4449				[15]	120	
E through H2N3227				[20]	250	
Forward-current transfer ratio	3076	V_{CE} = 1.0 V dc; I_C = 10 mA dc. pulsed(see 4.5.1).	[h_{FE3}] 5/			
E through H2N2369A, 2N4449				[20]	120	
E through H2N3227				[37.5]	300	

See footnotes at end of table.

TABLE II. Group D inspection - Continued.

Inspection 1/ 2/ 3/	MIL-STD-750		Symbol	Limit	Limit	Unit
	Method	Conditions		Min	Max	
Subgroup 2 - Continued.						
Forward-current transfer ratio	3076	V_{CE} = 1.0 V dc; I_C = 100 mA dc. pulsed(see 4.5.1).	[h_{FE4}] 5/			
E through H2N2369A, 2N4449				[10]	120	
E through H2N3227				[15]	150	
Collector-emitter saturation voltage	3071	I_C = 10 mA dc; I_B = 1.0 mA dc. pulsed (see 4.5.1).	$V_{CE(sat)1}$		0.23	V dc
Collector-emitter saturation voltage	3071	I_C = 30 mA dc; I_B = 3.0 mA dc. pulsed (see 4.5.1).	$V_{CE(sat)2}$		0.29	V dc
Collector-emitter saturation voltage	3071	I_C = 100 mA dc; I_B = 10 mA dc. pulsed (see 4.5.1).	$V_{CE(sat)3}$		0.52	V dc
Base-emitter saturation voltage	3066	Test condition A; I_C = 10 mA dc; I_B = 1.0 mA dc; pulsed (see 4.5.1).	$V_{BE(sat)1}$	0.70	0.98	V dc
Base-emitter saturation voltage	3066	Test condition A; I_C = 30 mA dc; I_B = 3.0 mA dc; pulsed (see 4.5.1).	$V_{BE(sat)2}$		1.04	V dc
Base-emitter saturation voltage	3066	Test condition A; I_C = 100 mA dc; I_B = 10 mA dc; pulsed (see 4.5.1).	$V_{BE(sat)3}$	0.80	1.38	V dc

1/ Tests to be performed on all devices receiving radiation exposure.
2/ For sampling plan, see MIL-PRF-19500.
3/ Electrical characteristics apply to the corresponding A, L, AU, AUBC, U, UA, UB, UBC, and UBCN suffix versions unless otherwise noted.
4/ See 6.2.e herein.
5/ See method 1019 of MIL-STD-750 for how to determine [h_{FE}] by first calculating the delta ($1/h_{FE}$) from the pre- and post-radiation h_{FE}. Notice the [h_{FE}] is not the same as h_{FE} and cannot be measured directly. The [h_{FE}] value can never exceed the pre-radiation minimum h_{FE} that it is based upon.

TABLE III. Groups B, C, and E delta measurements.

Step	Inspection 1/ 2/ 3/ 4/	MIL-STD-750		Symbol	Limit
		Method	Conditions		
1.	Forward-current transfer ratio	3076	V_{CE} = 1.0 V dc; I_C = 10 mA dc; pulsed (see 4.5.1)	Δh_{FE3}	±25 percent change from initial value.
2.	Collector - emitter and resistance	3071	I_C = 10 mA dc I_B = 1.0 mA dc	$\Delta V_{CE(sat)1}$	±50 mV change from previous measured value.
3.	Collector - emitter cutoff current	3041	Bias condition C; V_{CE} = 20 V dc	ΔI_{CES}	100 percent of initial value or 25 nA dc, whichever is greater.

1/ The delta measurements for table E-VIa (JANS) of MIL-PRF-19500 are as follows: Subgroups B4 and B5, see table III herein, steps 1, 2, and 3.
2/ The delta measurements (JAN, JANTX, and JANTXV) of 4.4.2.2 herein are as follows: Steps 1, 2, and 3, see table III herein, steps 1 and 3.
3/ The delta measurements for table E-VII of MIL-PRF-19500 and 4.4.3.1 are as follows: Subgroup 6, see table III herein, steps 2 and 3 (for JANS).
4/ The delta measurements for table E-IX of MIL-PRF-19500 and table III herein are as follows: Subgroups 1 and 2, see table III herein, all steps.

TABLE IV. Group E inspection (all quality levels) – for qualification or re-qualification only.

Inspection	MIL-STD-750		Qualification
	Method	Conditions	
Subgroup 1			45 devices c = 0
Temperature cycling (air to air)	1051	Test condition C, 500 cycles.	
Hermetic seal Fine leak Gross leak	1071	Test conditions G or H.	
Electrical measurements		See table I, subgroup 2 and table III herein.	
Subgroup 2			45 devices c = 0
Intermittent life	1037	Intermittent operation life: V_{CB} = 10 V dc; 6,000 cycles, t_{ON} = t_{OFF} = 3 minutes, P_{DON} = P_D max rated in accordance with 1.3; P_{DOFF} = 0.	
Electrical measurements		See table I, subgroup 2 and table III herein.	
Subgroup 4			Sample size N/A
Thermal impedance curves		See table E-IX, subgroup 4 of MIL-PRF-19500.	
Subgroup 5			
Not applicable			
Subgroup 6			11 devices
ESD	1020		
Subgroup 8			45 devices c = 0
Reverse stability	1033	Condition B.	
Subgroup 12			
Neutron Irradiation	1017	See 4.5.3	

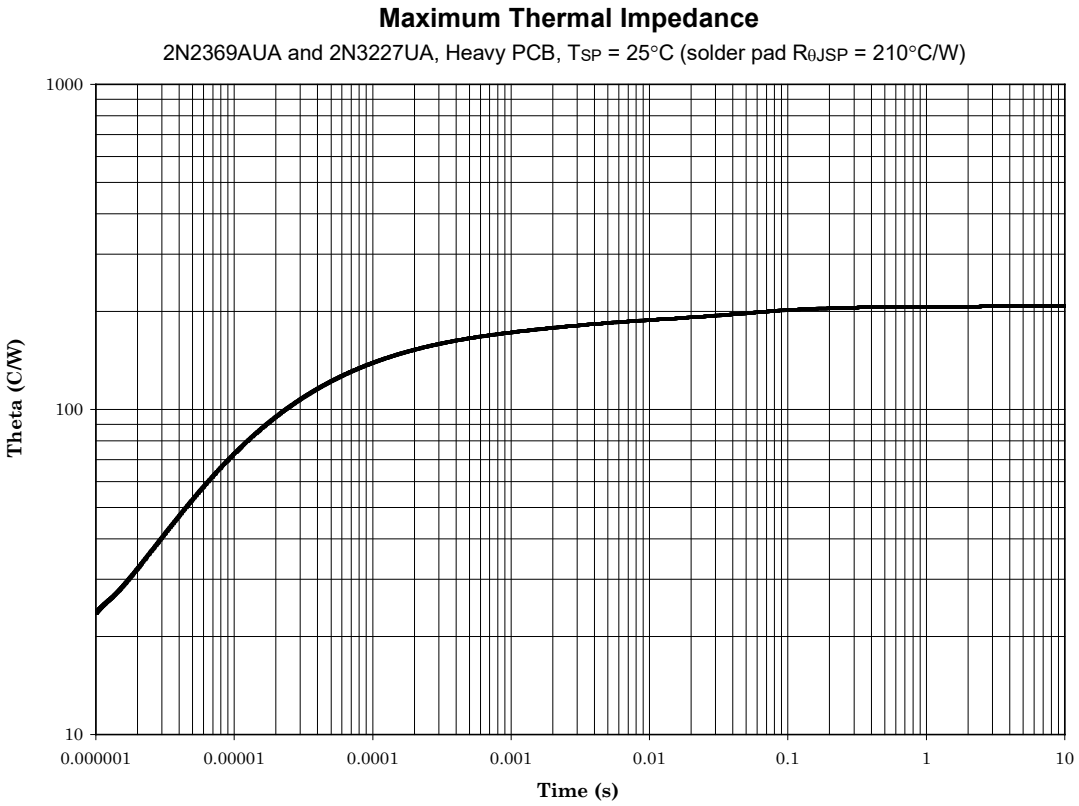

FIGURE 9. Thermal impedance graph ($R_{\theta JSP}$) for 2N2369AUA and 2N3227UA.

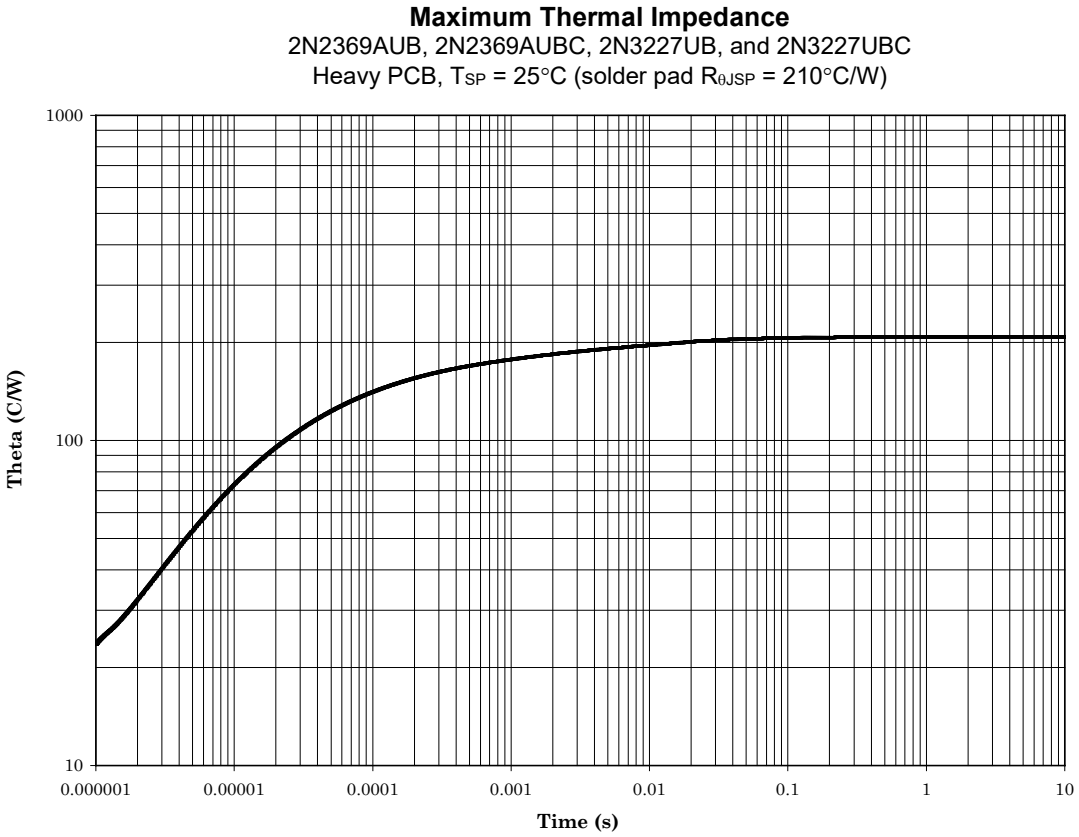

FIGURE 10. Thermal impedance graph ($R_{\theta JSP}$) for 2N2369AUB, 2N2369AUBC, 2N3227UB, and 2N3227UBC.

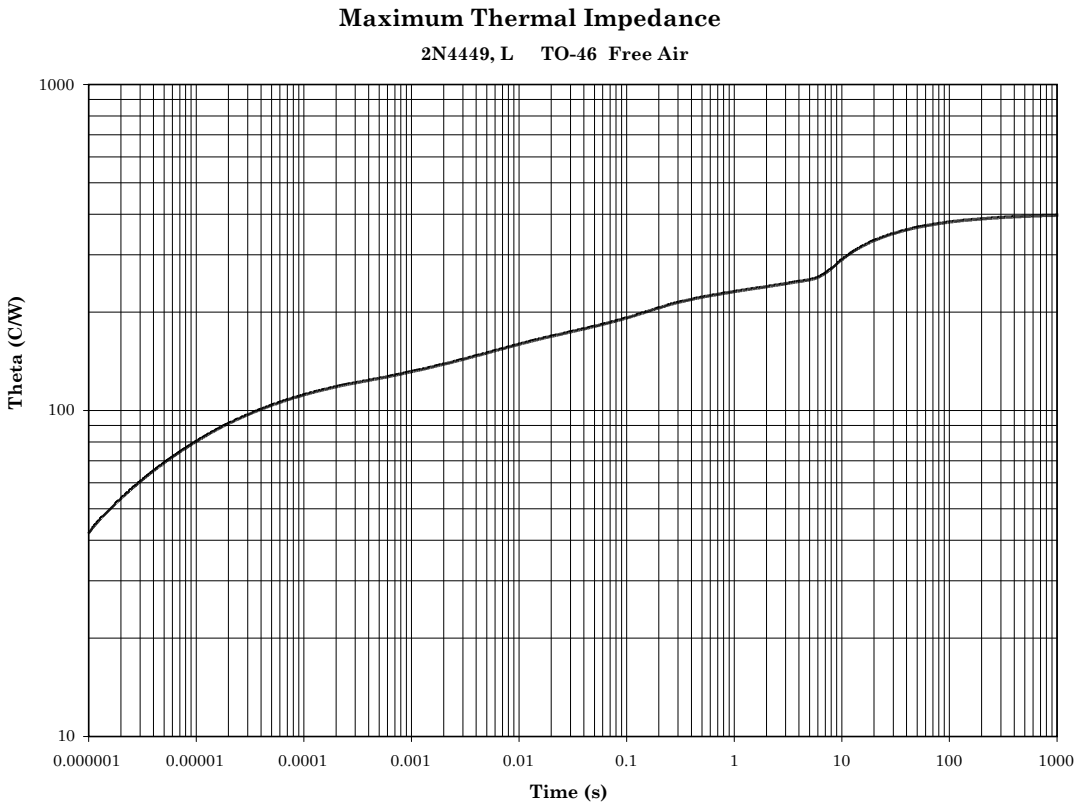

FIGURE 11. Thermal impedance graph TO-46 ($R_{\theta JA}$) for 2N4449, L.

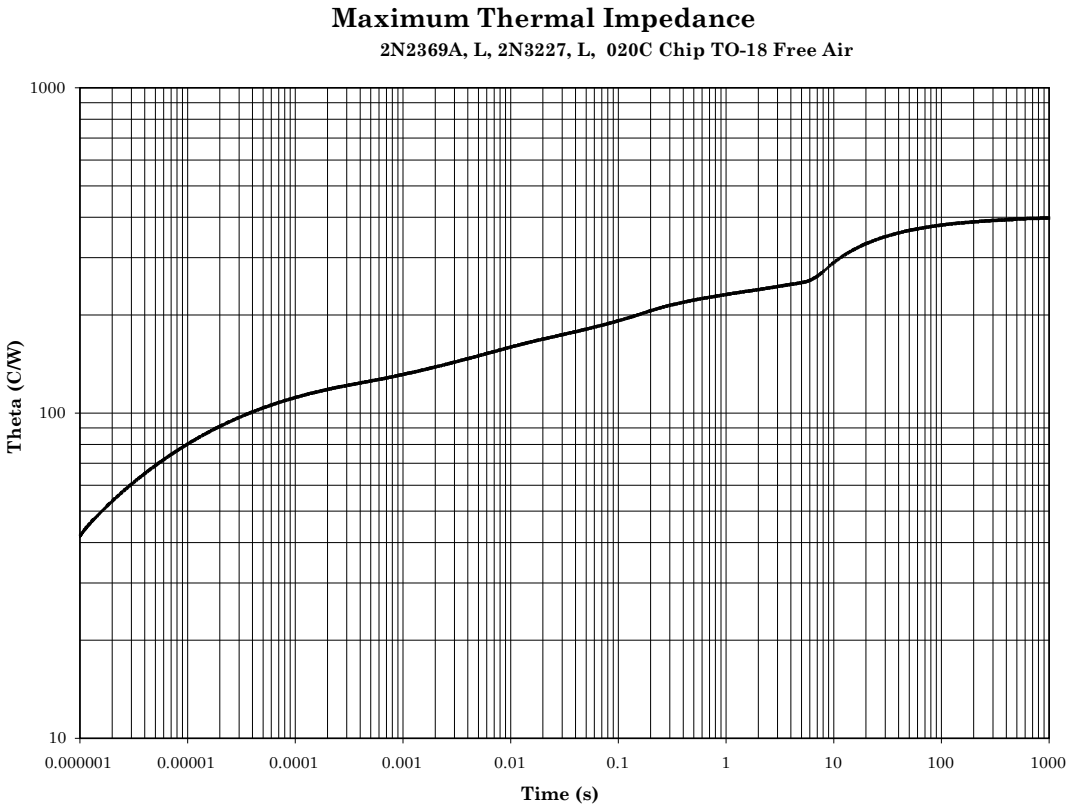

FIGURE 12. Thermal impedance graph (TO-18) ($R_{\theta JA}$) for 2N2369A, L, and 2N3227, L.

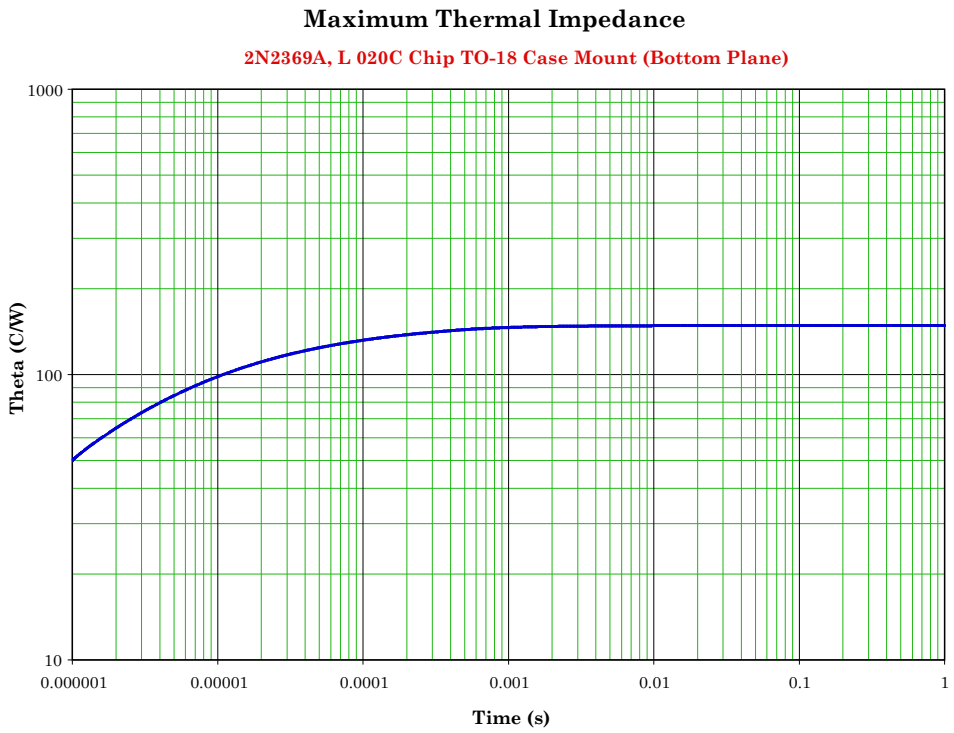

FIGURE 13. Thermal impedance graph (TO-18 TO-46) ($R_{\theta JC}$) for 2N2369A, L.

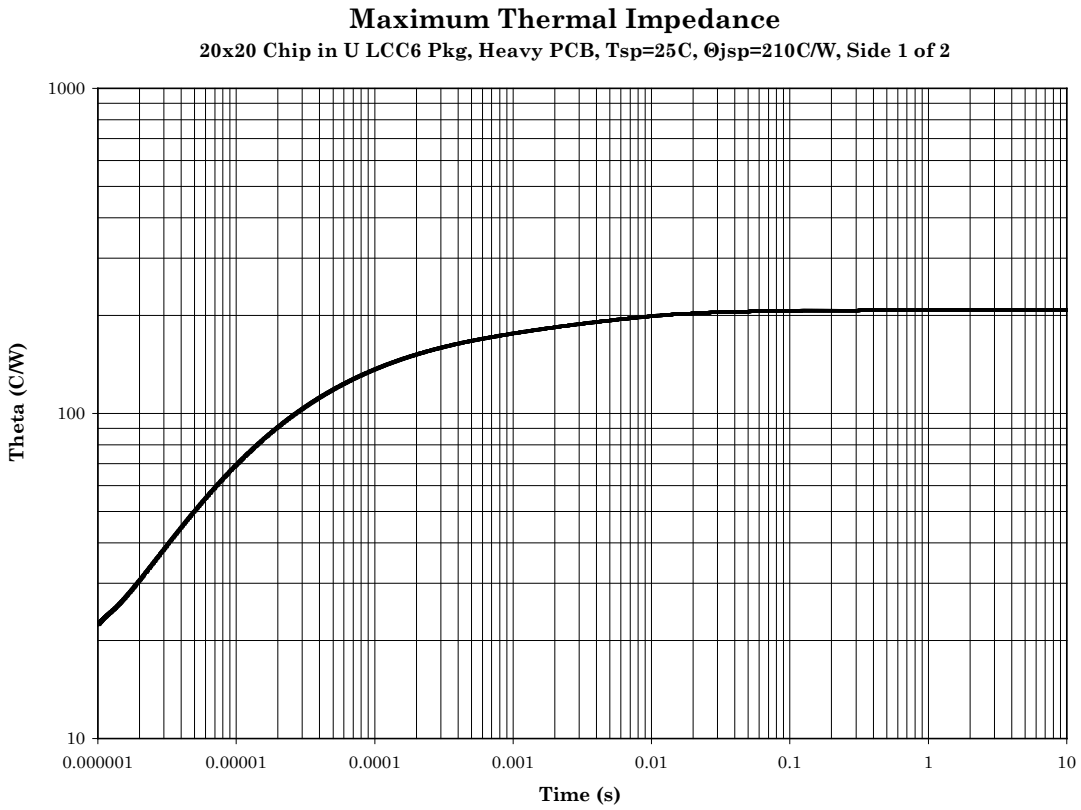

FIGURE 14. Thermal impedance graph ($R_{\theta JSP}$) for 2N2369AU and 2N3227U.

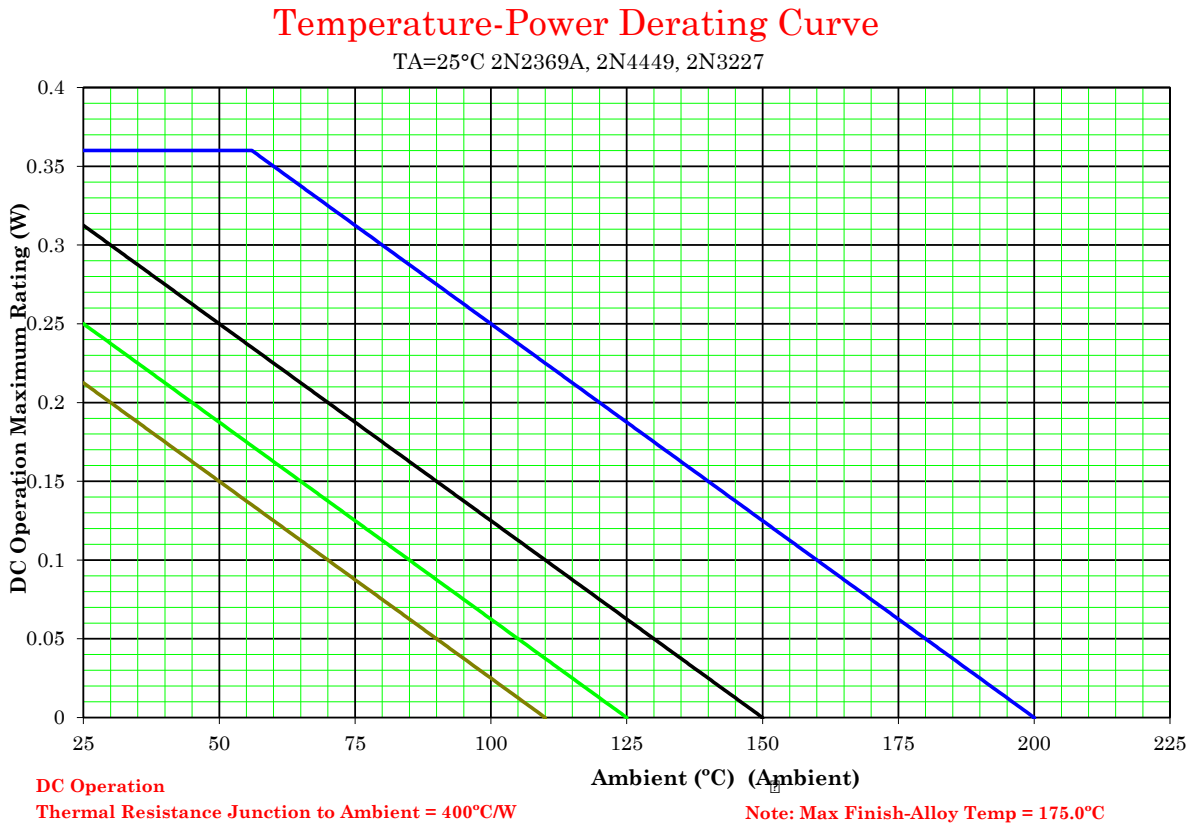

NOTES:

1. This is the true inverse of the worst case thermal resistance value. All devices are capable of operating at ≤ T_J specified on this curve. Any parallel line to this curve will intersect the appropriate power for the desired maximum T_J allowed.
2. Derate design curve constrained by the maximum junction temperatures and power rating specified. (See 1.3 herein.)
3. Derate design curve chosen at T_J ≤ +150°C, where the maximum temperature of electrical test is performed.
4. Derate design curve chosen at T_J ≤ +125°C, and +110°C to show power rating where most users want to limit T_J in their application.

FIGURE 15. Temperature-power derating curve for 2N2369A, L, 2N4449, L, 2N3227, L.

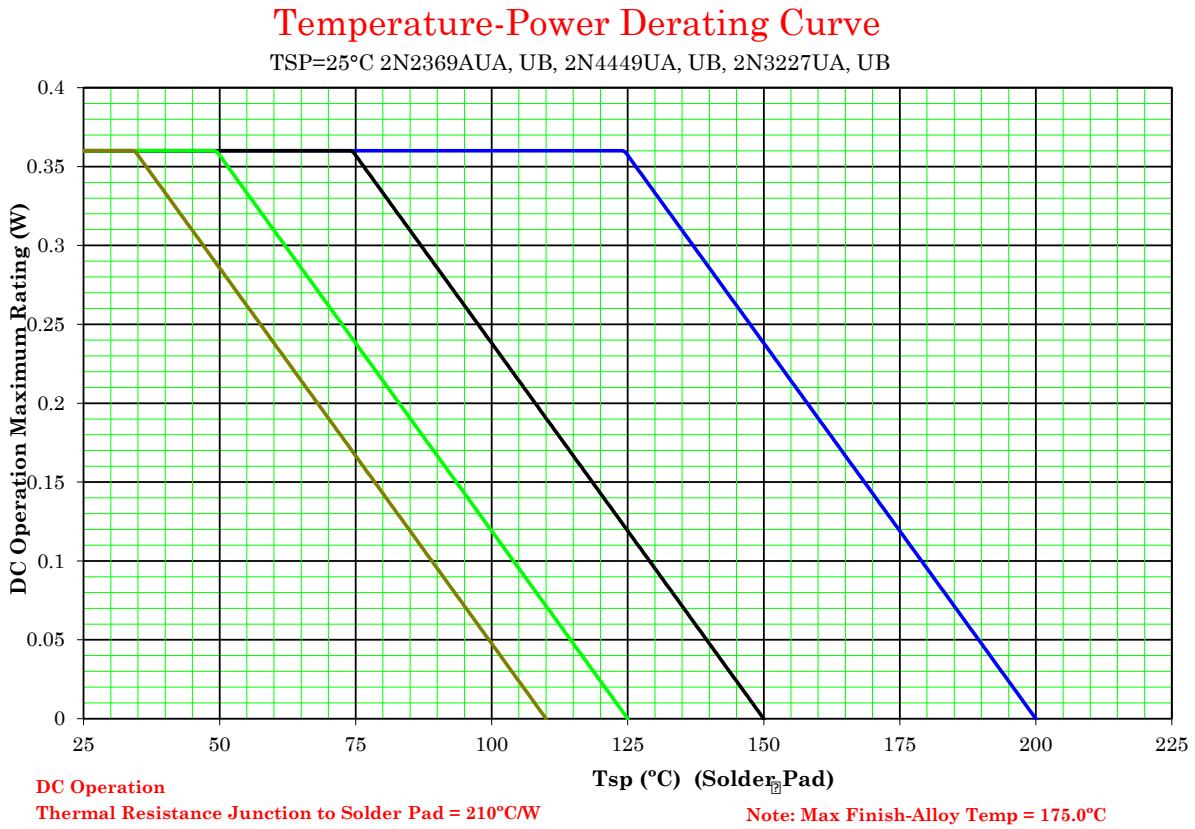

NOTES:

1. This is the true inverse of the worst case thermal resistance value. All devices are capable of operating at ≤ T_J specified on this curve. Any parallel line to this curve will intersect the appropriate power for the desired maximum T_J allowed.
2. Derate design curve constrained by the maximum junction temperatures and power rating specified. (See 1.3 herein.)
3. Derate design curve chosen at T_J ≤ +150°C, where the maximum temperature of electrical test is performed.
4. Derate design curve chosen at T_J ≤ +125°C, and +110°C to show power rating where most users want to limit T_J in their application.

FIGURE 16. Temperature-power derating curve for 2N2369AUA, UB, 2N4449UA, UB, 2N3227UA, UB.

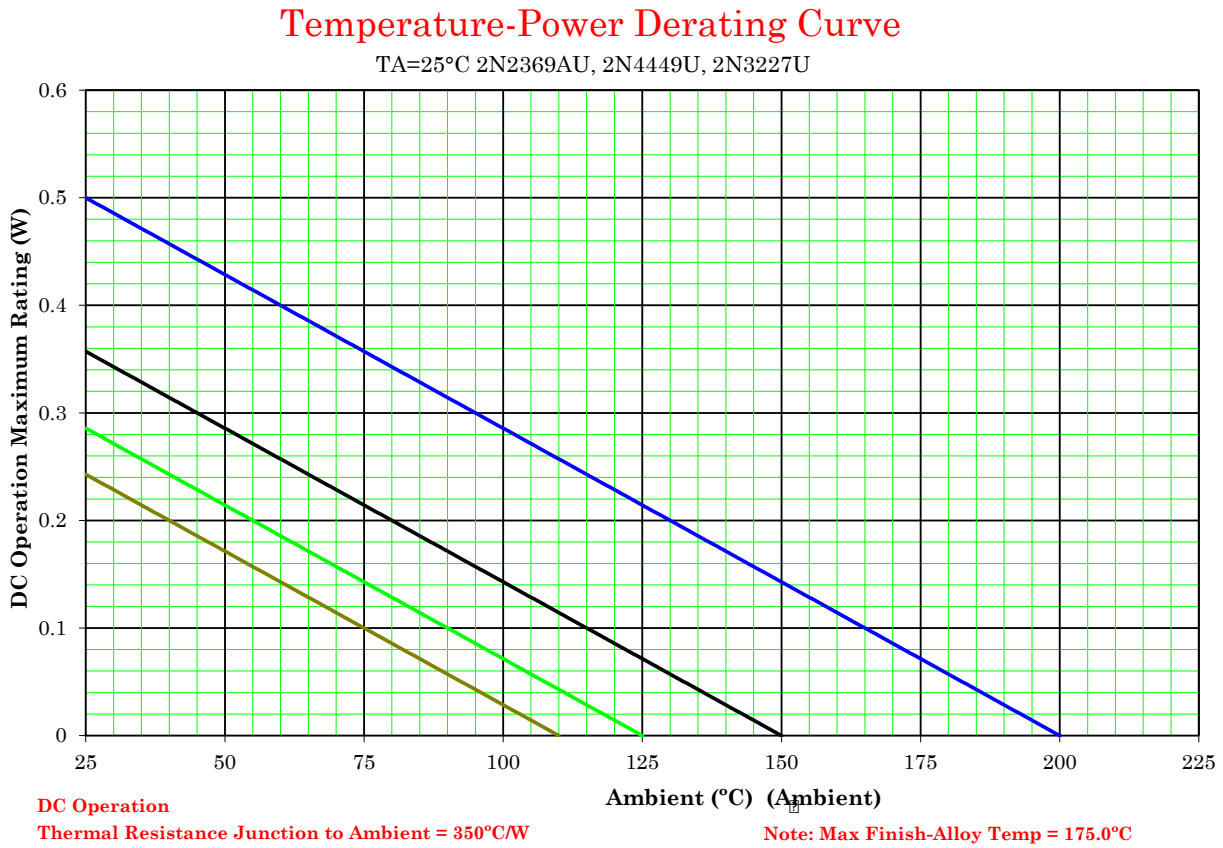

NOTES:

1. This is the true inverse of the worst case thermal resistance value. All devices are capable of operating at ≤ T_J specified on this curve. Any parallel line to this curve will intersect the appropriate power for the desired maximum T_J allowed.
2. Derate design curve constrained by the maximum junction temperatures and power rating specified. (See 1.3 herein.)
3. Derate design curve chosen at T_J ≤ +150°C, where the maximum temperature of electrical test is performed.
4. Derate design curve chosen at T_J ≤ +125°C, and +110°C to show power rating where most users want to limit T_J in their application.

FIGURE 17. Temperature-power derating curve for 2N2369AU, 2N4449U, 2N3227U.

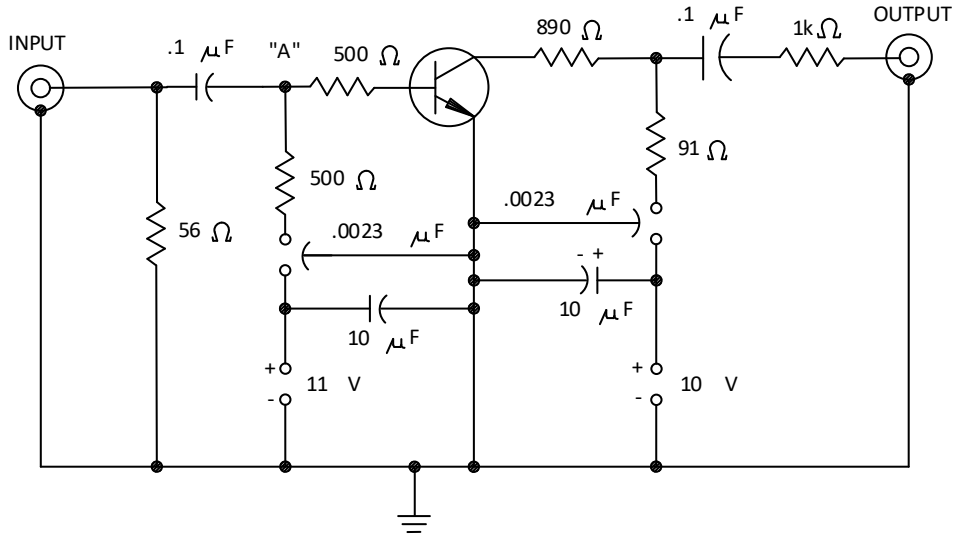

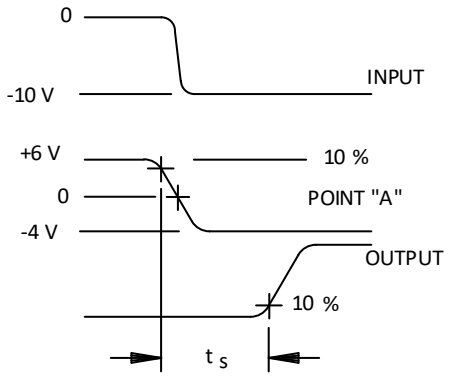

VOLTAGE WAVEFORMS

NOTES:

1. All capacitance in μF.
2. The input waveforms for each circuit are supplied by a pulse generator with the following characteristics: $Z_{OUT} = 50\Omega$, $t_r \leq 1$ ns, PW $\geq$ 300 ns, duty cycle $\leq$ 2 percent.
3. Output waveforms are monitored on an oscilloscope with the following characteristics: $t_r \leq .1$ ns, $Z_{IN} = 50\Omega$.

FIGURE 18. Charge storage time test circuit.

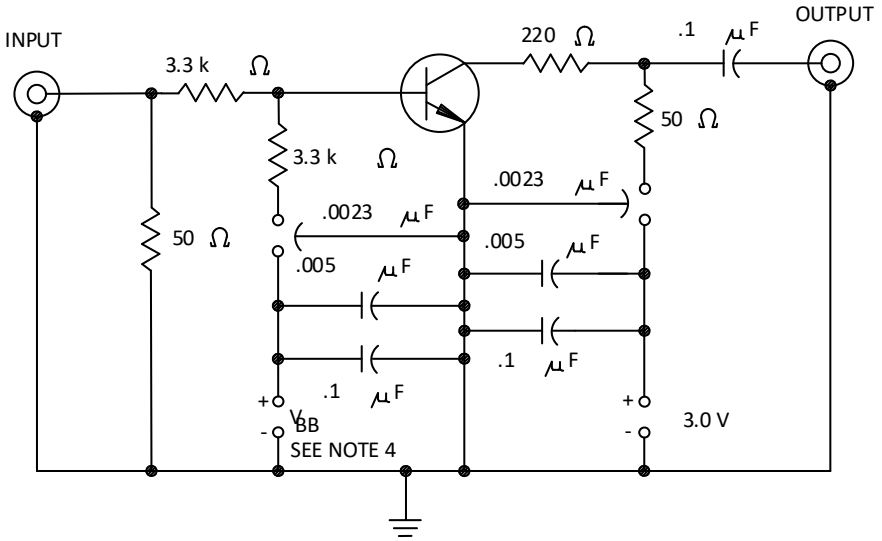

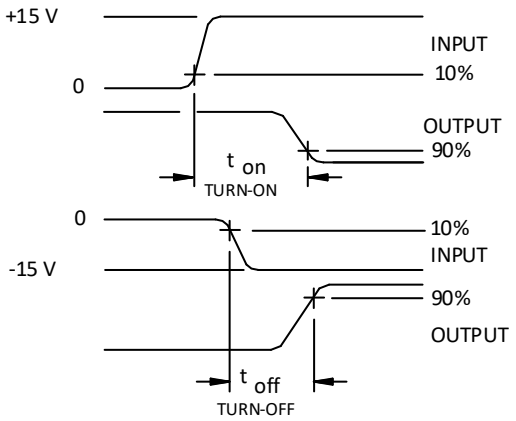

VOLTAGE WAVEFORMS

NOTES:

1. All capacitance in μF.
2. The input waveforms for each circuit are supplied by a pulse generator with the following characteristics: Z_{OUT} = 50Ω, $t_r \leq 1$ ns, PW ≥ 300 ns, duty cycle ≤ 2 percent.
3. Input and output waveforms are monitored on an oscilloscope with the following characteristics: $t_r \leq .1$ ns, Z_{IN} = 50Ω.
4. V_{BB} = -3.0 V for t_{on}, +12.0 V for t_{off}.

FIGURE 19. Turn-on and turn-off time test circuit.

5. PACKAGING

5.1 Packaging. For acquisition purposes, the packaging requirements shall be as specified in the contract or order (see 6.2). When packaging of materiel is to be performed by DoD or in-house contractor personnel, these personnel need to contact the responsible packaging activity to ascertain packaging requirements. Packaging requirements are maintained by the Inventory Control Point's packaging activities within the Military Service or Defense Agency, or within the Military Service's system commands. Packaging data retrieval is available from the managing Military Department's or Defense Agency's automated packaging files, CD-ROM products, or by contacting the responsible packaging activity.

6. NOTES

(This section contains information of a general or explanatory nature that may be helpful, but is not mandatory. The notes specified in MIL-PRF-19500 are applicable to this specification.)

6.1 Intended use. Semiconductors conforming to this specification are intended for original equipment design applications and logistic support of existing equipment.

6.2 Acquisition requirements. Acquisition documents should specify the following:

a. Title, number, and date of this specification.

b. Packaging requirements (see 5.1).

c. Lead finish (see 3.4.1).

d. The complete PIN, see 1.5 and 6.5.

e. For acquisition of RHA designed devices, table II, subgroup 1 testing of group D is optional. If subgroup 1 testing is desired, it should be specified in the contract.

6.3 Qualification. With respect to products requiring qualification, awards will be made only for products which are, at the time of award of contract, qualified for inclusion in Qualified Manufacturers List (QML 19500) whether or not such products have actually been so listed by that date. The attention of the contractors is called to these requirements, and manufacturers are urged to arrange to have the products that they propose to offer to the Federal Government tested for qualification in order that they may be eligible to be awarded contracts or orders for the products covered by this specification. Information pertaining to qualification of products may be obtained from DLA Weapons Support, ATTN: VQE, P.O. Box 3990, Columbus, OH 43218-3990 or e-mail vqe.chief@dla.mil. An online listing of products qualified to this specification may be found in the Qualified Products Database (QPD) at https://qpldocs.dla.mil.

6.4 Suppliers of JANHC and JANKC die. The qualified JANHC and JANKC suppliers with the applicable letter version (example JANHCA2N2369A) will be identified on the QML-19500.

	Die ordering information	Die ordering information	Die ordering information
PIN	Manufacturer	Manufacturer	Manufacturer
	43611	34156	52GC4
2N2369A (1)	JANHCA2N2369A, JANKCA2N2369A	JANHCB2N2369A, JANKCB2N2369A	JANHCC2N2369A, JANKCC2N2369A
2N3227		JANHCB2N3227, JANKCB2N3227	JANHCC2N3227, JANKCC2N3227

(1) The 2N4449 is the identical die used in the 2N2369A. Only difference between the two part numbers is in package form. Therefore, no need to call out a die form of the 2N4449.

6.5 PIN construction example.

6.5.1 Encapsulated devices The PINs for encapsulated devices are constructed using the following form.

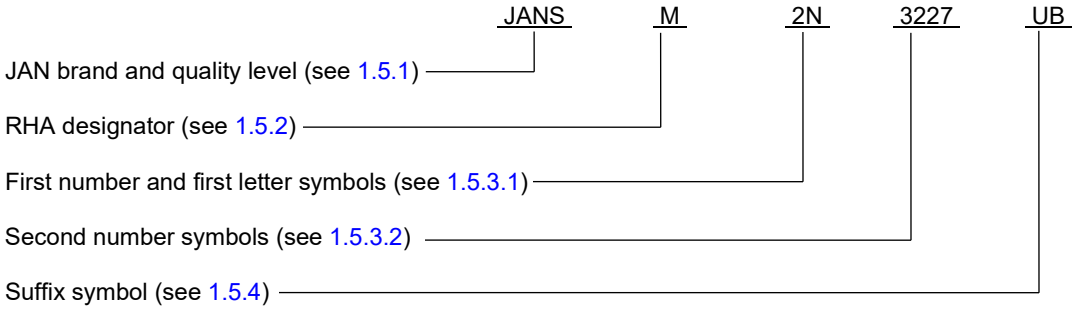

6.5.2 Unencapsulated devices. The PINs for un-encapsulated devices are constructed using the following form.

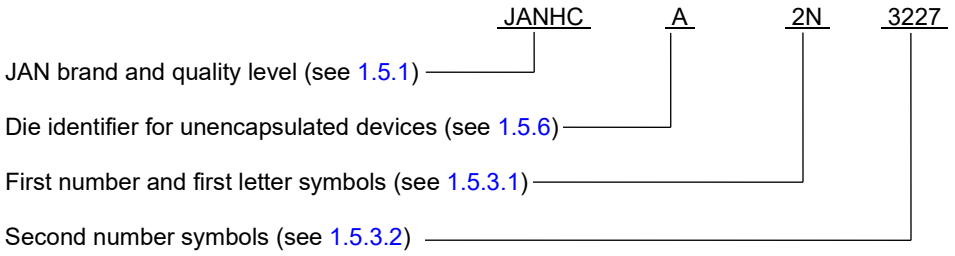

6.6 List of PINs. The following is a list of possible PINs available on this specification sheet.

PINs for types 2N2369A, 2N3227, and 2N4449			
JAN2N2369A	JANTX2N2369A	JANTXV#2N2369A (1)	JANS#2N2369A (2)
JAN2N3227	JANTX2N3227	JANTXV#2N3227 (1)	JANS#2N3227 (2)
JAN2N4449	JANTX2N4449	JANTXV#2N4449 (1)	JANS#2N4449 (2)
JAN2N2369AL	JANTX2N2369AL	JANTXV#2N2369AL (1)	JANS#2N2369AL (2)
JAN2N3227L	JANTX2N3227L	JANTXV#2N3227L (1)	JANS#2N3227L (2)
JAN2N4449L	JANTX2N4449L	JANTXV#2N4449L (1)	JANS#2N4449L (2)
JAN2N2369AU	JANTX2N2369AU	JANTXV#2N2369AU (1)	JANS#2N2369AU (2)
JAN2N3227U	JANTX2N3227U	JANTXV#2N3227U (1)	JANS#2N3227U (2)
JAN2N4449U	JANTX2N4449U	JANTXV#2N4449U (1)	JANS#2N4449U (2)
JAN2N2369AUA	JANTX2N2369AUA	JANTXV#2N2369AUA (1)	JANS#2N2369AUA (2)
JAN2N3227UA	JANTX2N3227UA	JANTXV#2N3227UA (1)	JANS#2N3227UA (2)
JAN2N4449UA	JANTX2N4449UA	JANTXV#2N4449UA (1)	JANS#2N4449UA (2)
JAN2N2369AUB	JANTX2N2369AUB	JANTXV#2N2369AUB (1)	JANS#2N2369AUB (2)
JAN2N3227UB	JANTX2N3227UB	JANTXV#2N3227UB (1)	JANS#2N3227UB (2)
JAN2N4449UB	JANTX2N4449UB	JANTXV#2N4449UB (1)	JANS#2N4449UB (2)
JAN2N2369AUBC	JANTX2N2369AUBC	JANTXV#2N2369AUBC (1)	JANS#2N2369AUBC (2)
JAN2N3227UBC	JANTX2N3227UBC	JANTXV#2N3227UBC (1)	JANS#2N3227UBC (2)
JAN2N4449UBC	JANTX2N4449UBC	JANTXV#2N4449UBC (1)	JANS#2N4449UBC (2)
JAN2N2369AUBCN	JANTX2N2369AUBCN	JANTXV#2N2369AUBCN (1)	JANS#2N2369AUBCN (2)
JAN2N3227UBCN	JANTX2N3227UBCN	JANTXV#2N3227UBCN (1)	JANS#2N3227UBCN (2)
JAN2N4449UBCN	JANTX2N4449UBCN	JANTXV#2N4449UBCN (1)	JANS#2N4449UBCN (2)

(1) The number sign (#) represents one of two RHA designators available (R and F). Remove for no RHA.
(2) The number sign (#) represents one of eleven RHA designators available (E, K, U, M, D, P, L, R, F, G, or H). Remove for no RHA.

6.6.2 PINs for unencapsulated devices (die). The following is a list of possible PINs for unencapsulated devices available on this specification sheet.

Quality level HC	Quality level HC w/ RHA	Quality level KC	Quality level KC w/ RHA
JANHCA2N2369A	JANHCA#2N2369A	JANKCA2N2369A	JANKCA#2N2369A
JANHCB2N2369A	JANHCB#2N2369A	JANKCB2N2369A	JANKCB#2N2369A
JANHCB2N3227	JANHCB#2N3227	JANKCB2N3227	JANKCB#2N3227
JANHCC2N2369A	JANHCC#2N2369A	JANKCC2N2369A	JANKCC#2N2369A
JANHCC2N3227	JANHCC#2N3227	JANKCC2N3227	JANKCC#2N3227

(1) The number sign (#) represents one of eleven RHA designators available for the KC quality level (E, K, U, M, D, P, L, R, F, G, or H), and one of two RHA designators available for the HC quality level (R or F).

6.7 Amendment notations. The margins of this specification are marked with asterisks to indicate modifications generated by this amendment. This was done as a convenience only and the Government assumes no liability whatsoever for any inaccuracies in these notations. Bidders and contractors are cautioned to evaluate the requirements of this document based on the entire content irrespective of the marginal notations and relationship to the previous issue.

CONCLUDING MATERIAL

Custodians:
Army - CR
Navy - SH
Air Force - 85
NASA - NA
DLA - CC

Review activities:
Army - AR, MI, SM
Navy - AS, MC
Air Force - 19

Preparing activity:
DLA - CC

(Project 5961-2026-085)

NOTE: The activities listed above were interested in this document as of the date of this document. Since organizations and responsibilities can change, you should verify the currency of the information above using the ASSIST Online database at https://assist.dla.mil/.