INCH-POUND

MIL-PRF-15733/33D
w/AMENDMENT 1
24 January 2008
SUPERSEDING
MIL-PRF-15733/33D
31 July 2003

PERFORMANCE SPECIFICATION SHEET

FILTERS, RADIO FREQUENCY INTERFERENCE, STYLE FL38

This specification sheet is approved for use by all Departments and Agencies of the Department of Defense.

The complete requirements for acquiring the filters described herein shall consist of this specification sheet and the latest issue of MIL-PRF-15733.

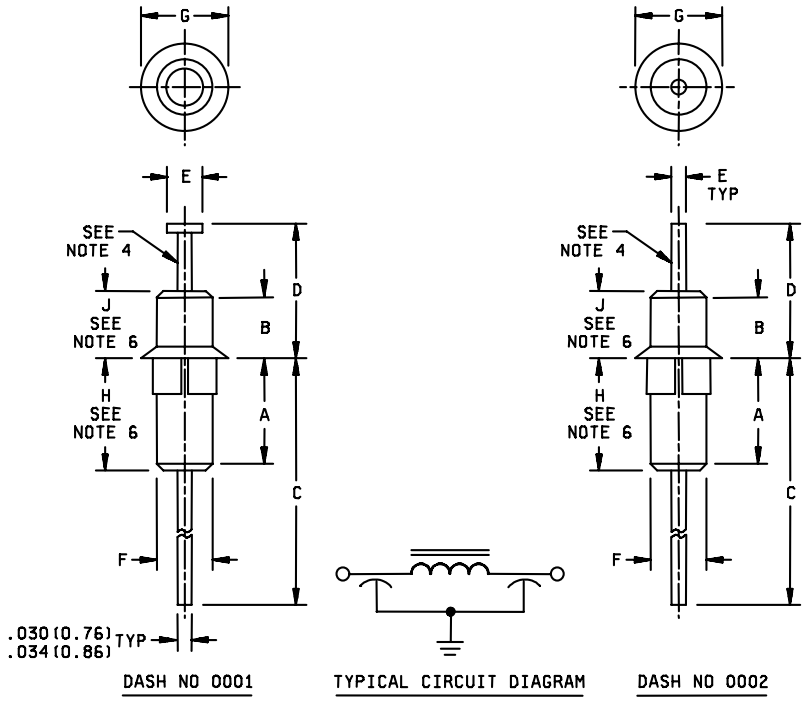

NOTES:
1. Dimensions are in inches.
2. Metric equivalents are given for general information only.
3. Circuit diagram for information only.
4. Leads shall be solid, solder-coated, AWG 20 (.032).
5. Suggested mounting hole diameter, .160 (4.06 mm).
6. Dimensions H and J are from mounting surface to clean lead.

FIGURE 1. Dimensions and configuration.

REQUIREMENTS:

Configuration and dimensions: See figure 1 and table I.

Weight: 1.1 grams, maximum.

Case: Not applicable (metallic mounting eyelet).

Terminals: Solderable. Pure tin finish is prohibited.

Operating temperature range: -55°C to +125°C.

Rated voltage: 125 V dc or 90 V rms, to 400 Hz over the operating temperature range of -55°C to +125°C.

Rated current: 10 amperes, dc or ac (rms).

Insertion loss: In accordance with MIL-PRF-15733 and table II.

Seal: Not applicable.

Solderability: In accordance with MIL-PRF-15733 for both terminals and mounting termination.

Capacitance to ground: In accordance with MIL-PRF-15733. Measured capacitance shall be at least 1,750 pF.

Temperature rise: 25°C maximum.

Dielectric withstanding voltage: In accordance with MIL-PRF-15733. The following exception shall apply:

Test voltage: 750 V dc applied for 1 to 5 seconds.

Barometric pressure (reduced): In accordance with MIL-PRF-15733 and Method 105, MIL-STD-202; test condition D.

Insulation resistance: In accordance with MIL-PRF-15733. Insulation resistance measured at 25°C between either terminal and the case shall be at least 10 G ohms.

Voltage drop: Not applicable.

Overload: In accordance with MIL-PRF-15733. The following exception shall apply:

Measurements at +25°C after test:

Insulation resistance only shall be measured and shall meet initial requirements.

Terminal strength: In accordance with MIL-PRF-15733 and Method 211, MIL-STD-202; test condition A.

Applied force: 5 pounds.

Salt atmosphere (corrosion): In accordance with MIL-PRF-15733 and Method 101, MIL-STD-202; test condition B.

Thermal shock: Not applicable.

Immersion: Not applicable.

TABLE I. Filter dimensions.

Dash number	A		B		C		D		E		F	G		H	J
	Min	Max	Min	Max	Min	Max	Min	Max	Min	Max	Max	Min	Max	Max	Max
0001	.142 (3.61)	.197 (5.00)	.078 (1.98)	.108 (2.74)	.749 (19.02)	.811 (20.60)	.273 (6.93)	.303 (7.70)	.045 (1.14)	.075 (1.91)	.125 (3.18)	.175 (4.45)	.205 (5.21)	.245 (6.22)	.155 (3.94)
0002	.142 (3.61)	.197 (5.00)	.078 (1.98)	.108 (2.74)	.749 (19.02)	.811 (20.60)	.273 (6.93)	.303 (7.70)	.030 (.76)	.034 (.86)	.125 (3.18)	.175 (4.45)	.205 (5.21)	.245 (6.22)	.155 (3.94)

TABLE II. Insertion loss versus frequency.

Dash number	Minimum insertion loss (dB) in accordance with MIL-STD-220, at +25°C				
	50 MHz	100 MHz	200 MHz	500 MHz	1-10 GHz
0001	35	50	50	60	60
0002	35	50	50	60	60

Shock (specified pulse): In accordance with MIL-PRF-15733 and Method 213, MIL-STD-202; test condition I.

Vibration, high frequency: In accordance with MIL-PRF-15733 and Method 204, MIL-STD-202; test condition D.

Moisture resistance: In accordance with MIL-PRF-15733. The following details and exceptions shall apply:

Loading voltage: Not applicable.

Polarization voltage: Not applicable.

Measurements after 24-hour drying period, at a temperature not to exceed +85°C, and a relative humidity of 50 percent.

Insulation resistance shall be not less than 1 G ohm.

Life: In accordance with MIL-PRF-15733 and Method 108, MIL-STD-202; test condition D. The following exceptions shall apply:

Measurements after test:

Insulation resistance shall be not less than 1 G ohm.

Marking: Filters shall not be marked. Full marking in accordance with MIL-PRF-15733, shall be marked on the unit package.

Part or Identifying Number (PIN): M15733/33-(dash number from table I).

* Referenced documents. In addition to MIL-PRF-15733, this document also references the following:

MIL-STD-202
MIL-STD-220

Changes from previous issue. The margins of this specification sheet are marked with asterisks to indicate where changes from the previous issue were made. This was done as a convenience only and the Government assumes no liability whatsoever for any inaccuracies in these notations. Bidders and contractors are cautioned to evaluate the requirements of this document based on the entire content irrespective of the marginal notations and relationship to the last previous issue.

Custodians:
Army - CR
Navy - EC
Air Force - 11
DLA - CC

Preparing activity:
DLA - CC

(Project 5915-2008-010)

Review activities:
Army – AT, AV
Navy - AS, CG, MC, OS, SH
Air Force - 19, 99

* NOTE: The activities listed above were interested in this document as of the date of this document. Since organizations and responsibilities can change, you should verify the currency of the information above using the ASSIST Online database at http://assist.daps.dla.mil.