INCH - POUND

MIL-PRF-15305F
w/AMENDMENT 1
6 October 2023
SUPERSEDING
MIL-PRF-15305F
6 May 2013

PERFORMANCE SPECIFICATION

COILS, ELECTRICAL, FIXED AND VARIABLE, RADIO FREQUENCY GENERAL SPECIFICATION FOR

This specification is approved for use by all Departments and Agencies of the Department of Defense.

1. SCOPE

1.1 Scope. This specification covers the general requirements for radio frequency coils, fixed and variable, for use as simple inductive elements in radio frequency circuits. Procurement of coils of a specific design will require additional data in the form of complementary Service documents, giving detail electrical and mechanical requirements, tolerances, and applicable additions and exceptions to the general requirements and tests specified herein (see 3.1).

1.2 Classification.

1.2.1 Type designation. The type designation will be in the following form and as specified (see 3.1 and 6.2).

LT4	K
|	|
Style	Family
(1.2.1.1)	(1.2.1.2)

1.2.1.1 Style. The style is identified by the two-letter symbol “LT” followed by a one or two digit number. The letters identify radio frequency coils; the number identifies the grade and class in accordance with table I, 1.2.1.1.1, and 1.2.1.1.2.

Comments, suggestions, or questions on this document should be addressed to DLA Land and Maritime ATTN: DLA Land and Maritime-VAT, P.O. Box 3990, Columbus, Ohio 43218-3990, or email to Transformer@dla.mil. Since contact information can change, you may want to verify the currency of this address information using the ASSIST Online database at https://assist.dla.mil.

AMSC/NA FSC 5950

DISTRIBUTION STATEMENT A. Approved for public release; distribution is unlimited.

TABLE I. Grade and class.

Number	Grade	Class
1	1	C
2	2	C
3	3	C
4	1	B
5	2	B
6	3	B
7	1	O
8	2	O
9	3	O
10	1	A
11	2	A
12	3	A

1.2.1.1.1 Grade. The grades, including their environmental characteristics, are as follows:

Grade 1 – Resistant to the moisture resistance test (see 4.6.14).
Grade 2 – Resistant to the moisture resistance test (see 4.6.14).
Grade 3 – For use in sealed assemblies.

1.2.1.1.2 Class. The classes of coils denoting the maximum operating temperatures (temperature rise) (see 4.6.6 and 4.6.6.1) plus maximum ambient temperature are as follows:

Class O - - - - - - - - 85°C
Class A - - - - - - - - 105°C
Class B - - - - - - - - 125°C
Class C - - - - - - - - >125°C

1.2.1.2 Family. The family is identified by a single letter indicating its function as follows:

K - - - - - - - - - - - Coil, radio frequency, fixed.
V - - - - - - - - - - - Coil, radio frequency, variable

2. APPLICABLE DOCUMENTS

2.1 General. The documents listed in this section are specified in sections 3 and 4 of this specification. This section does not include documents cited in other sections of this specification or recommended for additional information or as examples. While every effort has been made to ensure completeness of this list, document users are cautioned that they must meet all specified requirement documents cited in section 3 and 4 of this specification, whether or not they are listed.

2.2 Government documents.

2.2.1 Specifications, standards, and handbooks. The following specifications, standards, and handbooks form a part of this document to the extent specified herein. Unless otherwise specified, the issues of these documents are those cited in the solicitation or contract.

FEDERAL STANDARDS

FED-STD-H28 - Screw-Thread Standards for Federal Services.

DEPARTMENT OF DEFENSE STANDARDS

MIL-STD-202 - Test Methods, for Electronic and Electrical Component Parts.
MIL-STD-202-106 - Moisture resistance
MIL-STD-202-107 - Thermal shock
MIL-STD-202-108 - Life (at elevated ambient temperature)
MIL-STD-202-201 - Vibration
MIL-STD-202-204 - Vibration, high frequency
MIL-STD-202-208 - Solderability

MIL-STD-202-210	-	Resistance to soldering heat
MIL-STD-202-211	-	Terminal strength
MIL-STD-202-213	-	Shock (specified pulse)
MIL-STD-202-215	-	Resistance to solvents
MIL-STD-202-303	-	DC resistance
MIL-STD-810	-	Environmental Test Methods.
MIL-STD-1276	-	Leads, Weldable, for Electronic Component Parts.
MIL-STD-1285	-	Marking of Electrical and Electronic Parts.

(Copies of these documents are available online at https://quicksearch.dla.mil or from the Standardization Document Order Desk, 700 Robbins Avenue, Building 4D, Philadelphia, PA 19111-5094.)

2.3 Non-Government publications. The following documents form a part of this document to the extent specified herein. Unless otherwise specified, the issues of these documents are those cited in the solicitation or contract. (see 6.2).

INTERNATIONAL ORGANIZATION FOR STANDARDIZATION (ISO)

ISO 10012	-	Measurement Management Systems - Requirements for Measurement Processes and Measuring Equipment.
ISO/IEC 17025	-	General requirements for the competence of testing and calibration laboratories

(Copies of this document can be obtained online at https://www.iso.org)

(Non-Government standards and other publications are normally available from the organizations that prepare or distribute the documents. These documents also may be available in or through libraries or other informational services.)

2.4 Order of precedence. In the event of a conflict between the text of this specification and the references cited herein, the text of this specification takes precedence. Nothing in this document, however, supersedes applicable laws and regulations unless a specific exemption has been obtained.

3. REQUIREMENTS

3.1 Specification sheets. The individual part requirements shall be as specified herein and in accordance with the applicable specification sheet. In the event of any conflict between the requirements of this specification and the specification sheet, the latter shall govern (see 6.2).

3.2 Qualification. Coils furnished under this specification and covered by specification sheets (or military standards) listed in supplement 1B shall be products which are qualified for listing on the applicable qualified products list at the time set for opening of bids (see 4.4 and 6.3).

3.3 Material. The materials for each part shall be as specified herein; however, when a definite material is not specified, a material shall be used which will enable the coils to meet the performance requirements of this specification. Acceptance or approval of any constituent material shall not be construed as a guaranty of the acceptance of the finished product. Reclaimed materials shall be used to the maximum extent possible.

3.3.2 Flammable materials. In so far as practicable, materials used in the construction of the coils shall be nonflammable and nonexplosive.

3.3.3 Corrosive materials. Corrosive materials used in any of the manufacturing processes shall be removed or neutralized so that no corrosion will result from such use. In so far as practicable, materials used in the construction of coils shall be noncorrosive.

3.3.4 Threaded parts. Threaded parts shall be of corrosion-resistant material or shall be protected against corrosion.

3.3.5 Screws, nuts, and washers. All mounting and terminal screws, nuts, and washers shall be corrosion-resistant material or shall be protected against corrosion.

3.3.6 Pure tin. The use of pure tin, as an underplate or final finish, is prohibited both internally and externally. Tin content of coil components and solder shall not exceed 97 percent, by mass. Tin shall be alloyed with a minimum of 3 percent lead, by mass (see 6.8).

3.3.7 Solder and soldering flux. Solder and solder flux shall be of such quality as to enable the coil to meet all requirements of this specification. In addition, solder shall have a liquidus melting point greater than +270°C. Additional information and guidance on solder and soldering flux is provided in 6.9.

3.4 Design and construction. Coils shall be of the design, construction, and physical dimensions specified (see 3.1).

3.4.1 Threaded parts. Unless otherwise specified (see 3.1), all threaded parts shall be in accordance with FED-STD-H28.

3.4.1.1 Engagement of threaded parts. Unless otherwise (see 3.1), all threaded parts shall engage by at least three full threads.

3.4.2 Terminals. Terminals shall be of the shape and physical dimensions specified (see 3.1).

3.4.2.1 Solderable/weldable lead terminals. Unless otherwise specified (see 3.1), the manufacturer shall verify that the leads conform to one of the solderable/weldable lead type of MIL-STD-1276 or an approved equivalent..

3.4.2.2 Winding ends. The termination of the winding ends shall not depend on solder alone to attain mechanical strength.

3.4.3 Weight. Coils shall not exceed the weight specified (see 3.1).

3.5 Thermal shock. When coils are tested as specified in 4.6.2, all windings shall be electrically continuous (see 3.6 and 4.6.3). There shall be no dielectric breakdown or impairment of protective coatings.

3.6 Winding continuity (when applicable). When coils are tested as specified in 4.6.3, all windings shall be electrically continuous.

3.7 Operating torque (applicable only to variable coils). When coils are tested as specified in 4.6.4, the torque required to rotate the tuning core shall be within the limits specified (see 3.1).

3.8 Electrical characteristics. The electrical characteristics shall be as specified (see 3.1 and 4.6.5).

3.8.1 Inductance. When coils are tested as specified in 4.6.5.1, the inductance shall be as specified (see 3.1).

3.8.2 Q of coils. When coils are tested as specified in 4.6.5.2, the Q shall be as specified (see 3.1).

3.8.3 Self-resonant frequency. When coils are tested as specified in 4.6.5.3, the self-resonant frequency shall be not less than the minimum value specified (see 3.1).

3.8.4 Percent coupling (when specified). When coils are tested as specified in 4.6.5.4 or 4.6.5.4.1, the percent coupling shall be as specified (see 3.1).

3.8.5 Incremental current inductance change (when specified). When coils are tested as specified in 4.6.5.5, the inductance value shall represent a change of 5 percent or less of the inductance measures with zero direct current (dc) (see 3.1).

3.8.6 Effective parallel resistance (when specified). When coils are tested as specified in 4.6.5.6 or 4.6.5.6.1, the effective parallel resistance shall be as specified (see 3.1).

3.8.7 DC resistance. When coils are tested as specified in 4.6.5.7, the dc resistance shall be as specified (see 3.1).

3.9 Temperature rise (applicable to cylindrical insulated coils and when specified). When coils are tested as specified in 4.6.6 or 4.6.6.1, the temperature rise of any winding above the specified maximum ambient temperature (see 3.1) shall not exceed the value specified (see 3.1) and there shall be no evidence of physical damage.

3.10 Overload. When coils are tested as specified in 4.6.7, there shall be no evidence of cracked cases, nor loosening of the terminals.

3.11 Resistance to soldering heat. When coils are tested as specified in 4.6.8, there shall be no evidence of mechanical damage, loosening of the terminals, or solder reflow as evidence by solder flowing from the body. Pretest and posttest X-ray inspection at 10X shall be required.

3.12 Terminal strength. When coils are tested as specified in 4.6.9, there shall be no winding discontinuity, no loosening or rupturing of the terminals, nor other mechanical damage.

3.13 Life. When coils are tested as specified in 4.6.10, there shall be no evidence of mechanical damage. The changes in electrical characteristics between the initial measurements and 250 +48, -0 hours shall not exceed the initial limits specified for phenolic and iron core coils and the electrical characteristics from the 250 +48, -0 hours up to and including 2,000 hours shall not exceed the degradation limits specified (see 3.1). The change in electrical characteristics for ferrite core coils between the initial measurements up to and including 2,000 hours shall not exceed the degradation limits specified (see 3.1 and 6.7).

3.14 Low temperature storage. When coils are tested as specified in 4.6.11, there shall be no impairment of protective coating, no loosening of the windings or terminals, nor any other evidence of mechanical damage.

3.15 Vibration. When coils are tested as specified in 4.6.12.1 or 4.6.12.2, there shall be no winding discontinuity (see 3.6), nor evidence of physical or mechanical damage.

3.16 Shock (specified pulse). When coils are tested as specified in 4.6.13, there shall be no winding discontinuity (see 3.6), nor evidence of physical or mechanical damage.

3.17 Moisture resistance (grades 1 and 2 only). When coils are tested as specified in 4.6.14, the electrical characteristics shall be as specified in 3.8, and there shall be no evidence of corrosion affecting the mechanical or electrical operation.

3.18 Fungus. All external materials shall be nonnutrient to fungus growth or shall be suitably treated to retard fungus growth. The manufacturer shall verify by certification that all external materials are fungus resistant or shall test the coils as specified in 4.6.15. There shall be no evidence of fungus growth on the external surfaces.

3.19 Solderability. When coils are tested as specified in 4.6.16, they shall meet the applicable criteria for termination in MIL-STD-202-208 and electrical connections shall be mechanically secure before soldering and electrically continuous after soldering.

3.20 Resistance to solvents. When coils are tested as specified in 4.6.17, there shall be no evidence of mechanical damage and the markings shall remain legible.

3.21 Flammability. When coils tested as specified in 4.6.18, there shall be no evidence of violent burning which results in an explosive-type fire, and the coating material used on the coils shall be self-extinguishing. A coil shall not be considered to have failed in the event that it is consumed by the applied flame. A coil shall be considered to have failed only if an explosion of dripping of flaming material occurs, an explosive-type flame is produced, or if visible burning continues beyond the allowable duration of 3 minutes after removal of the applied flame.

3.22 Marking (not applicable to cylindrical coils). Coils shall be permanently and legibly marked with the military part number, manufacturer's source code, date code, and lot symbol as shown in the following example. The marking shall remain legible after all tests.

EXAMPLE:

M15305/1-001 or MS75008-21	- - - Military part number
12345	- - - Manufacturer's source code
6733A	- - - Date code and lot symbol

3.22.1 Manufacturer's source code and date code. The manufacturer's source code and date code shall be marked in accordance with MIL-STD-1285.

3.22.2 Lot symbol. The lot shall be identified by a single letter assigned alphabetically, except that letters "I", "J", and "O" shall not be used.

3.22.3 For cylindrical coils. Cylindrical coils shall be marked with five colored bands. A silver band MIL identifier of double the width of the other bands, located near one end of the coil, identifies military radio frequency coils; four other bands or equal width, three indicating the inductance in microhenries and the fourth band indicating the tolerance in percent. Color coding shall be in accordance with the color code of table II. When either the first or second band of the three bands is gold, this band represent the decimal point for inductance values less than 10, and the other two bands shall represent significant figures. For inductance values of 10 or more, the first two bands shall represent significant figures, and the third band shall represent the multiplier. For small units, dots may be used instead of bands, when specified (see 3.1). The diameter of the MIL-identifier dot shall be larger than the other dots. The colors used shall be in accordance with MIL-STD-1285. Typical color coding for units with inductance values less than 10 and for 10 or greater is shown in figure 1. The marking shall be legible upon completion of each examination or test.

TABLE II. Color code.

Color	Significant Figure	Multiplier 1/	Inductance tolerance (percent)
Black	0	1	- - -
Brown	1	10	±1%
Red	2	100	±2%
Orange	3	1,000	±3%
Yellow	4	- - -	- - -
Green	5	- - -	- - -
Blue	6	- - -	- - -
Violet	7	- - -	- - -
Gray	8	- - -	- - -
White	9	- - -	- - -
None 2/	- - -	- - -	±20%
Silver	- - -	- - -	±10%
Gold	Decimal point	- - -	±5%

1/ The multiplier is the factor by which the two significant figures are multiplied to yield the nominal inductance value
2/ Indicates body color.

3.22.4 Laser marking (cylindrical coils). At the option of the manufacturer, cylindrical coils may be laser marked. The marking shall be legible after all tests, and as a minimum, contain the manufacturer's name or source code, inductance value, tolerance, and date code.

3.23 Recycled, recovered, environmentally preferable, or biobased materials. Recycled, recovered, environmentally preferable, or biobased materials should be used to the maximum extent possible, provided that the material meets or exceeds the operational and maintenance requirements, and promotes economically advantageous life cycle costs.

3.24 Workmanship. Coils shall be processed in such a manner as to be uniform in quality and free of defects that will affect function, life, or serviceability.

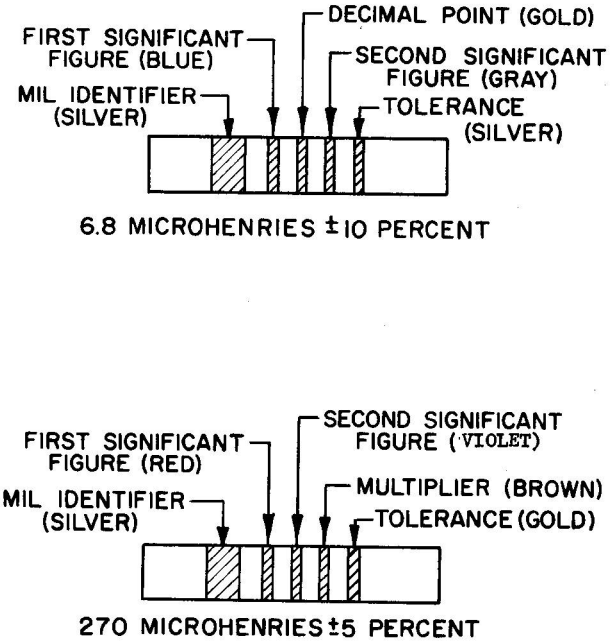

FIGURE 1. Typical color coding.

4. VERIFICATION

4.1 Classification of inspections. The examination and testing of transformers and inductors shall be classified as follows:

a. Qualification inspection (see 4.4).
b. Conformance inspection (see 4.5).

4.2 Test equipment and inspection facilities. Test and measuring equipment and inspection facilities of sufficient accuracy, quality and quantity to permit performance of the required inspection shall be established and maintained by the inspection facility. The establishment and maintenance of a calibration system to control accuracy of the measuring and test equipment shall be in accordance with ISO/IEC 17025, ISO 10012 or equivalent.

4.3 Inspection conditions. Unless otherwise specified herein, all inspections shall be performed in accordance with the test conditions specified in the "GENERAL REQUIREMENTS" of MIL-STD-202.

4.3.1 Test voltage. The test voltage shall contain no more than 5 percent harmonic distortion.

4.3.2 Test frequency. When a test frequency is specified without a tolerance, the frequency used shall be within ±0.1 percent of the specified value.

4.3.3 Demagnification. When necessary to overcome remanence effects, demagnification is permitted.

4.4 Qualification inspection. Qualification inspection shall be performed at a laboratory acceptable to the government (see 6.3) on sample units produced with equipment and procedures normally used in production.

4.4.1 Sample size. The number of sample coils to be subjected to qualification inspection shall be as specified in the appendix to this specification, and table IV.

4.4.2 Inspection routine. Sample units shall be subjected to the qualification inspection specified in table IV, in the order shown. All sample units shall be subjected to the inspection of group I except those units of group V and VI. The sample units shall then be divided as specified in table IV for groups II to IV inclusive, and the sample units subjected to the inspection for their particular group. Additional units shall be required for groups V and VI tests.

4.4.2.1 Comparison standards. When the use of comparison standards is specified (see 3.1), three sample units nearest to the design-center values of the electrical characteristics (see 4.6.5) will be selected from those sample units which have been subjected to the inspection of group I of table IV, and clearly and permanently marked with these values. Two of the sample units selected will be retained by the Government as standards. The remaining sample units will be returned to the contractor for use as a comparison standard (see 6.4) for correlation of measurements in the electrical characteristics quality conformance inspection specified (see 3.1).

4.4.3 Failures. One or more failures shall be cause for refusal to grant qualification approval.

4.4.4 Retention of qualification. To retain qualification, every 12 months, the manufacturer shall verify to the qualifying activity the following.

a. Design of the coils have not changed.
b. Verification that group A and group B inspections have been performed on inspection lots supplied to the requirements of this specification.
c. The manufacturer retains the capability to manufacturer and test coils to this specification.

In the event that no production has occurred in this period, the manufacturer shall verify to the qualifying activity that capability to manufacture and test the Qualified Products List (QPL) coil still exists and that the manufacturer wants to remain on the QPL.

TABLE IV. Qualification inspection.

Inspection	Requirement paragraph	Method paragraph	Number of Sample units to be Inspected 4/
Group I			
Thermal shock	3.5	4.6.2	All sample units except Groups V & VI
Operating torque (when applicable)	3.7	4.6.4	
Electrical characteristics	3.8	4.6.5	
Inductance	3.8.1	4.6.5.1	
Q	3.8.2	4.6.5.2	
Self resonant frequency	3.8.3	4.6.5.3	
DC resistance	3.8.7	4.6.5.7	
Other electrical characteristics (3.1) (initial):			
Percent coupling (when specified)	3.8.4	4.6.5.4	
Incremental current inductance Change (when specified)	3.8.5	4.6.5.5	
Effective parallel resistance (when specified)	3.8.6	4.6.5.6	
Visual and mechanical examination (external)	3.1,3.3 to 3.4.3 incl, 3.22 and 3.24	4.6.1.1	
Group II			
Temperature rise	3.9	4.6.6	6
Overload 2/	3.10	4.6.7	
Resistance to soldering heat	3.11	4.6.8	
Electrical characteristics (final)	3.8	4.6.5	
Inductance	3.8.1	4.6.5.1	
Q	3.8.2	4.6.5.2	
Group III			
Life	3.13	4.6.10	6
Group IV			
Low temperature storage (-65°C)	3.14	4.6.11	6
Vibration	3.15	4.6.12	
Shock (specified pulse)	3.16	4.6.13	
Moisture resistance	3.17	4.6.14	
Electrical characteristics (final)	3.8	4.6.5	
Visual and mechanical examination (external)	3.1,3.3 to 3.4.3 incl, 3.22 and 3.24	4.6.1.1	
Visual and mechanical examination (internal) (only 2 samples need be dissected)	3.1 and 3.3	4.6.1.2	

See footnotes at the end of table.

TABLE IV. Qualification inspection – Continued.

Inspection	Requirement paragraph	Method paragraph	Number of Sample units to be Inspected 4/
Group V			
Fungus 3/ -	3.18	4.6.15	2
Group VI			
Solderability 1/ (both leads) - - - - - - - -	3.19	4.6.16	6
Resistance to solvents 1/ - - - - - - - - - -	3.20	4.6.17	4
Flammability (use 3 units for Solderability) -	3.21	4.6.18	(3)

1/ The units shall be clean units that have not been subjected to any other test.
2/ After the overload test is performed, a period of 24 hours shall elapse prior to taking electrical characteristics (final) measurements.
3/ The fungus requirement is either by certification or performance.
4/ Combined submission will be in accordance with the appendix (see A.2.1.2)

4.5 Conformance inspection.

4.5.1 Inspection of product for delivery. Inspection of product for delivery shall consist of groups A and B inspection. Group B inspection for preparation for delivery is not required when the qualifying activity has allowed group B testing to be performed annually (see table VII).

4.5.1.1 Inspection lot. An inspection lot shall consist of all the coils of the same style and made of the same core material and of the same specification sheet (or Military Standard sheet) produced under essentially the same conditions and offered for inspection at one time. The manufacturer may combine coils of different inductance values and inductance tolerances. The inductance value shall be equally representative of the production lot for that period.

4.5.1.2 Group A inspection. Group A inspection shall consist of the examination and tests specified in table VI, in the order shown.

4.5.1.2.1 Sampling plan. A sample of parts shall be randomly selected from each inspection lot in accordance with table V. If one or more defects are found, the lot shall be rescreened, and defects removed. After screening and removal of defects, a new sample of parts shall be randomly selected in accordance with table V. If one or more defects are found in the second sample, the lot shall be rejected and shall not be supplied to this specification.

TABLE V. Sampling plan.

Lot size	Group A	Group B
1 to 5	100 percent	100 percent
6 to 13	100 percent	5
14 to 50	13	5
51 to 90	13	7
91 to 150	13	11
151 to 280	20	13
281 to 500	29	16
501 to 1,200	34	19
1,201 to 3,200	42	23
3,201 to 10,000	50	29
10,001 to 35,000	60	35
35,001 to 150,000	74	40
150,001 to 500,000	90	40
500,001 and over	102	40

TABLE VI. Group A inspection.

Inspection	Requirement paragraph	Method paragraph
Thermal shock 1/ - - - - - - - - - - - - -	3.5	4.6.2
Operating torque (when applicable) –	3.7	4.6.4
Electrical characteristics (initial) - - - -	3.8	4.6.5
Visual and mechanical examination (external) - - - - - - - - - - - - - - - - - - -	3.1,3.3, to 3.4.3 incl, 3.22 and 3.24	4.6.1.1

1/ Measurement after thermal shock, not applicable.

4.5.1.3 Group B inspection. Group B inspection shall consist of the examinations and tests specified in table VII , in the order shown, and shall be made on sample units which have been subjected to and have passed group A inspection.

4.5.1.3.1 Sampling plan. A sample of parts shall be randomly selected from each inspection lot in accordance with table V. If one or more defects are found, the lot shall be rescreened and defects removed. After screening and removal of defects, a new sample of parts shall be randomly selected in accordance with table V. If one or more defects are found in the second sample, the lot shall be rejected and shall not be supplied to this specification.

4.5.1.3.2 Disposition of sample units. Sample units which have passed all the group B inspection may be delivered on the contract or purchase order, if the lot is accepted and the sample units are still within specified electrical tolerances and meet the requirements for visual and mechanical inspection. The leads of these sample units shall also be clean, smooth and free from any foreign particles.

TABLE VII. Group B inspection.

Test 1/	Requirement paragraph	Method paragraph
Electrical characteristics (initial)		
Inductance - - - - - - - - - - - - - - - - -	3.8.1	4.6.5.1
Q -	3.8.2	4.6.5.2

1/ If the manufacturer can demonstrate that these tests have been performed five consecutive times with zero failures, these tests can be performed on an annual basis, with approval of the qualifying activity. If the interface, physical dimension, or processing of the part is changed, or of there are any quality problems or failures, the qualifying activity may require resumption of the original test frequency. A change in test frequency does not relieve the manufacturer from meeting the test requirements in case of dispute.

4.6 Methods of inspection.

4.6.1 Visual and mechanical examination.

4.6.1.1 External. Coils shall be examined to verify that their weight, materials, external design and construction, physical dimensions, marking, and workmanship are in accordance with the applicable requirements (see 3.1, 3.3 to 3.4.3 inclusive, 3.22, and 3.24).

4.6.1.2 Internal. Coils shall be disassembled and/or dissected and examined to verify that the materials, internal design, construction, and workmanship are in accordance with the applicable requirements (see 3.1, 3.3 to 3.3.5 inclusive, and 3.22).

4.6.2 Thermal shock (see 3.5). Coils shall be tested in accordance with MIL-STD-202-107. The following details and exceptions shall apply:

a. Test condition A-1 for qualification; A for group A inspection. Step 3 shall be at the maximum operating temperature for the class. (NOTE: The manufacturer has the option of performing the group A thermal shock test at 125°C for all products supplied to this specification. However, performing the test at a higher temperature than the maximum operating temperature for some QPL coils is at the risk of the manufacturer.)
b. Measurements after cycling – Winding continuity shall be determined, dielectric withstanding voltage, and the insulation resistance as specified in 4.6.3.

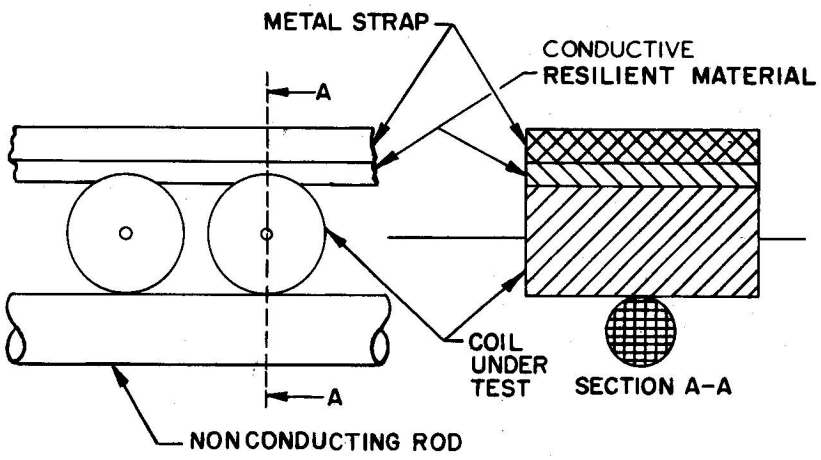

FIGURE 2. Coil-connecting assembly for mounting during polarization.

4.6.3 Winding continuity (see 3.6). All windings of coils shall be tested for electrical continuity by any suitable means that will not introduce currents in excess of the rated value, or the incremental current value (when specified (see 3.1), whichever is less.

The following test circuit is recommended for ferrite core coils to limit the test current to less than .6 mA.

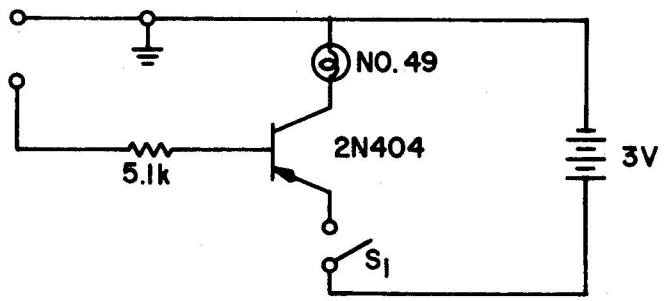

4.6.4 Operating torque (see 3.7) (applicable only to variable coils). Coils shall be exposed to a temperature of 25° C, with a tolerance of +10°C and -5°C. The coil under test shall be rigidly clamped by the body. The tuning core shall be rotated for eight cycles (16 excursions) from maximum core extension to minimum position for one complete cycle while not exceeding the maximum or minimum torque specified (see 3.1). Each cycle shall take a minimum of 40 seconds to perform.

4.6.5 Electrical characteristics (see 3.1 and 3.8). The coils shall be mounted by their normal mounting means on their applicable test fixture. The electrical characteristics to be determined shall include inductance, Q, self-resonant frequency, and dc resistance. Additional electrical characteristics shall be measured when specified (see 3.1).

4.6.5.1 Inductance. Unless otherwise specified (see 3.1), effective inductance of coils shall be measured at the frequency specified. For cylindrical coils, the test procedures of 4.6.5.1.1 and 4.6.5.1.2 shall be used. For quality conformance inspection, the measurement of effective inductance shall be referred to a comparison standard for correlation, when specified. (see 3.1, 4.4.2.1, and 6.4). When true inductance is specified (see 3.1), the following test procedure, or equivalent, shall be used. A calibrated capacitor shall be used to tune the winding to resonance at several frequencies. The points shall describe a straight line of added capacitance, one point of which shall be $1/(f_o)^2$, as abscissa, versus the reciprocal of the frequency squared, as ordinate, to be plotted, and true inductance to be calculated by the following formula:

True inductance = KM

Where: $K = \frac{1}{4\pi^2} = 0.0253$

M = Slope of the line representing added capacitance.
f_o = Self-resonant frequency of the coil at the abscissa of zero capacity.

4.6.5.1.1 Effective inductance for cylindrical coils (inductance 0.10 to 10.0 microhenries inclusive). The tests shall be performed using a Q meter such as Hewlett Packard (HP) models 260A, HP4342A, HP250RX meter or equivalent at appropriate test frequencies as listed in the instructions for the test equipment. Suitable means shall be used to calibrate the frequency dial of the Q meter within ±0.1 percent for the applicable test frequency. Frequencies to be used for testing the various ranges of inductance shall be as follows:

Inductance range, microhenry (µH)	Reference test frequency megahertz (MHz) for 260A
0.10 to 1.0 inclusive	25.0
Above 1.0 to 10.0 inclusive	7.9

Allowance shall be made for the internal inductance of the Q meter and the test fixture as determined in 4.6.5.1.1.1.

4.6.5.1.1.1 Effective inductance. Effective inductance shall be determined as follows when using test fixtures TF-A or TF-B, as applicable on figure 3 or 4. The appropriate test fixture shall be inserted in the Q-meter coil terminals with the side showing the test-fixture letter facing the capacitance terminals. The appropriate shorting bar conforming to figure 5 or 6 shall be inserted in the clips of the test fixture in such a manner that the terminals rest firmly against the stops, and so that the bar is centered between the test-fixture terminals. The Q-meter capacitance dial shall be set at 400 picofarads (pF) and the vernier capacitance dial at zero. The Q-meter shall then be resonated using the frequency dial until a peak reading is obtained. This frequency shall be monitored in order to obtain an accuracy of 0.1 percent. This resonant frequency value in MHz shall be recorded. The main capacitance dial shall be calibrated periodically in accordance with a routine calibration program for test equipment. The sum of the residual inductance of the Q meter and the inductance of the test fixture shall be calculated from:

$$L_{CF} = \frac{1}{4\pi^2 f^2 c} - L_{BAR}$$

Where: L_{CF} = inductance in μH of the test fixture and residual inductance of the Q meter.
f = frequency in MHz.
c = capacitance in microfarads (μF).
L_{BAR} = calculated inductance in μH of the shorting bar as determined from the following formula:

$$L_{BAR} = 0.002\ell\left[2.303\log_{10}\frac{4\ell}{d} - 1 + \frac{d}{2\ell}\right]$$

Where: ℓ = length of wire (cm).
d = diameter of cross section (cm).

The shorting bar shall then be removed from the test fixture and the Q meter frequency shall be set to the frequencies specified in 4.6.5.1.1. The coil under test shall then be inserted in the test fixture in such a manner that the leads are straight and rest firmly against the stops, and so that the unit is centered between the text-fixture terminals. The L-C dial of the Q meter shall then be tuned until the resonance meter indicates a peak reading. The inductance (L_d) shall be read directly on the L-C dial, using the inductance scale and the effective inductance (see 3.1), of the coil calculated from the formula:

$$L = L_d - L_{cf}$$

Where: L = effective inductance in μH of coils.
L_d = inductance dial reading in μH.
L_{cf} = correction factor for inductance of test fixture and residual inductance of the Q meter in μH.

4.6.5.1.2 Effective inductance for cylindrical coils (inductance greater than 10 μH). Test as specified in 4.6.5.1.1, except that no allowance is made for residual inductance of Q meter and inductance of test fixture. Frequencies to be used for testing various ranges of inductance shall be as follows:

Inductance range, μH	Reference test frequency (MHz) for 260 A
Above 10.0 to 100.0, inclusive	2.5
Above 100.0 to 1,000.0 inclusive	0.790
Above 1,000.0 to 10,000.0 inclusive	0.250
Above 10,000.0 to 100,000.0 inclusive	0.079

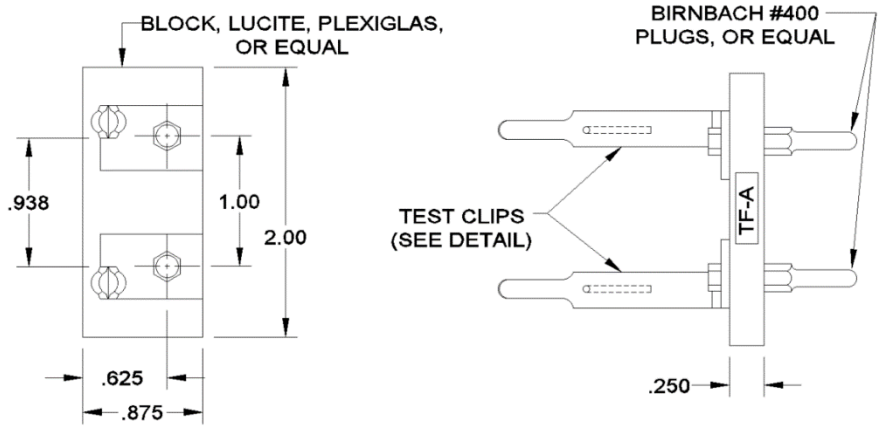

SHALL BE USED WHEN COIL
BODY LENGTH IS .563 OR LESS

INCHES	MM
.250	6.35
.563	14.30
.625	15.88
.875	22.22
.939	23.83
1.000	25.40
2.000	50.80

NOTES:
1. Dimensions are in inches.
2. Letters in blocks to be marked on fixture.
3. Unless otherwise specified, tolerance is ±.005 (.13 mm).
4. Metric equivalents are given for general information only and based on 1.00 inch = 25.4 mm.

FIGURE 3. Test fixture TF-A (for axial leads) or equivalent.

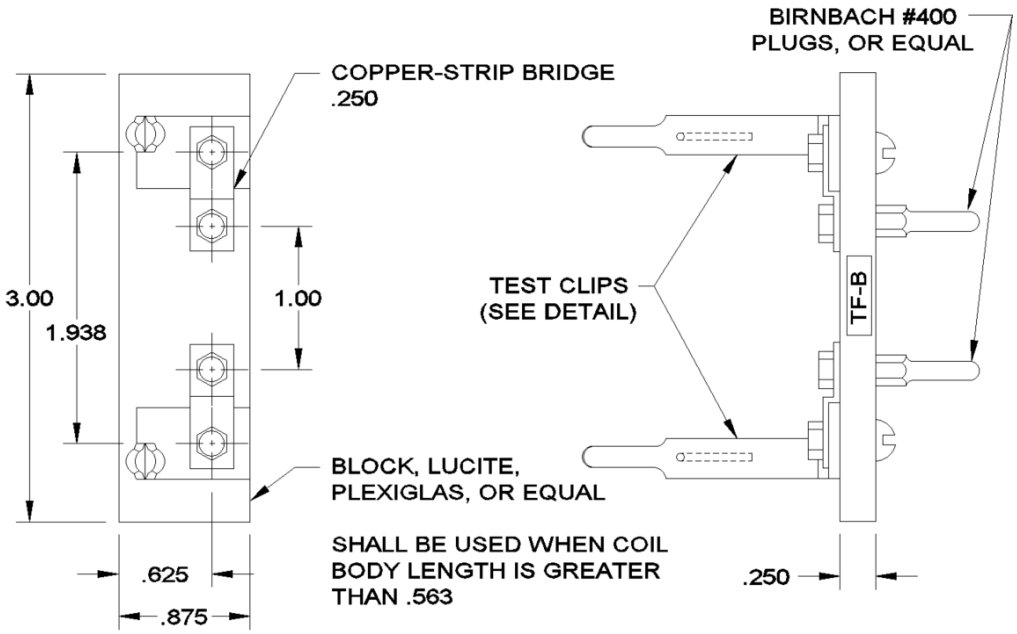

INCHES	MM
.250	6.35
.563	14.30
.625	15.88
.875	22.22
1.000	25.40
1.938	49.23
3.000	76.20

NOTES:
1. Dimensions are in inches.
2. Letters in blocks to be marked on fixture.
3. Unless otherwise specified, tolerance is ±.005 (.13 mm).
4. Metric equivalents are given for general information only and based on 1.00 inch = 25.4 mm.

FIGURE 4. Test fixture TF-B (for axial leads) or equivalent.

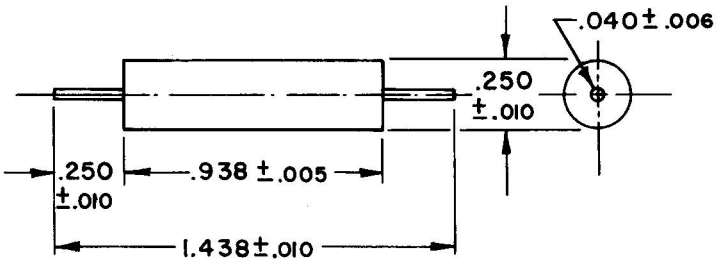

INCHES	MM
.005	.13
.006	.15
.010	.25
.040	1.02
.250	6.35
.938	23.83
1.438	36.53

COPPER OR BRASS

NOTES:
1. Dimensions are in inches.
2. Metric equivalents are given for general information only and based on 1.00 inch = 25.4 mm.

FIGURE 5. Shorting bar for test fixture TF-A (for axial leads).

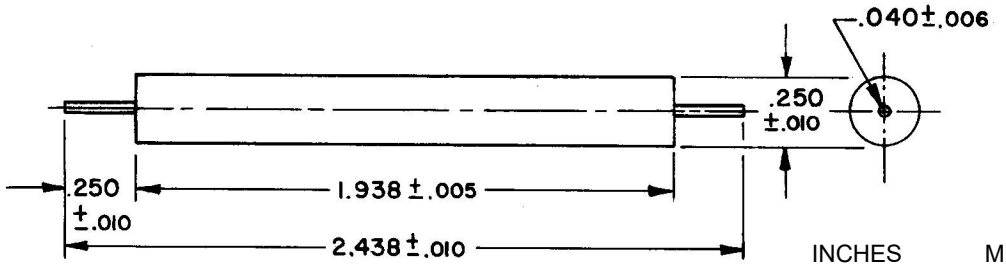

INCHES	MM
.005	.13
.006	.15
.010	.25
.040	1.02
.250	6.35
1.938	49.23
2.438	61.93

COPPER OR BRASS

NOTES:
1. Dimensions are in inches.
2. Metric equivalents are given for general information only and based on 1.00 inch = 25.4 mm.

FIGURE 6. Shorting bar for test fixture TF-B (for axial leads).

4.6.5.1.3 Effective inductance for radial lead coils (inductance 0.10 to 10.0 µH, inclusive). The test shall be performed as specified in 4.6.5.1.1.1, except that test fixtures TF-C, TF-D, or TF-E, on figure 7, shall be used. The shorting bar for use with these test fixtures shall be made of AWG size No. 18 solid copper wire approximately 1.25 inches long, and shall be bent as required.

4.6.5.1.3.1 Effective inductance for radial lead coils (inductance greater than 10 µH). The test shall be performed as specified in 4.6.5.1.2.

4.6.5.2 Q of coils. The test shall be performed using a Q meter such as Hewlett Packard model 260A, HP4342A, HP250RX meter or equivalent. Suitable means shall be used to calibrate the frequency dial of the Q meter and the Q-standard within ±0.1 percent of the applicable test frequency. Frequencies to be used for testing the various ranges of inductance shall be as specified in 4.6.5.1.1 and 4.6.5.1.2. The appropriate test fixture, as applicable, as shown on figure 3, 4, or 7, shall be assembled to the coil terminals of the Q meter, with the side showing the test fixture letter facing the capacitance terminals. The unit under test shall then be inserted into the test clip in such a manner that the leads are straight and rest firmly against the stops, and so that the unit is centered between the terminals. The Q shall then read on the Q voltmeter.

4.6.5.3 Self-resonant frequency. Unshielded coils shall be placed in the field of a variable-frequency oscillator, such as Measurements Corporation megacycle meter, model 59, or equivalent. The oscillator shall include a device for indicating the relative amount of power absorbed from the field (e.g., a grid-dip meter). The unit under test shall be placed on the appropriate test fixture shown on figure 8 or 9. Units shall be suspended or supported a minimum of 1.50 inches from any surface other than the test-fixture supports or oscillator coil. The frequency of the oscillator shall be varied through the frequency range near the self-resonant frequency specified (se 3.1 and 6.1). At any frequency in the frequency range where an abrupt increase in power absorption is indicated, the coupling between the oscillator coil and the unit under test shall be decreased, by increasing he separation between the coils, until a moderate dip in grid current results when tuning to this resonance. This frequency shall be considered the self-resonant frequency for the unit, and shall be accurately determined by suitable means to within ±0.2 percent. A check shall be made for spurious indications due to a resonance not associated with the unit under test, by removing the unit from the field (at frequencies below 2.5 MHz, any suitable method may be used). Coils which cannot be resonated in this manner, however, when electrostatic shielded coils tested, the shield of the coil shall be grounded. The following method may be used as an alternate method of measurement of the shielded coils (see 3.8.3).

4.6.5.3.1 Alternate test method. When unshielded coils under test cannot be resonated by the method specified in 4.6.5.3, the test shall be performed using the instruments specified in 4.6.5.2 or equivalent. The coils shall be mounted in the appropriate test fixture, as applicable, as shown on figure 3, 4, or 7, with the test-fixture letter facing the inductance terminals. The tuning capacitor of the q meter shall then be set to approximately 400 pF, and the Q circuit shall be resonated by adjusting the oscillator frequency of the Q meter. The unit under test shall then be replaced with a shielded comparison coil having an inductance about 1/25 that of the unit under test, or a coil that will resonate in the Q circuit at a frequency about 10 times the initial resonant frequency. The Q meter shall then be set to a frequency approximately 10 times the initial resonant frequency, and the Q circuit shall then be resonated at this new frequency. (This factor of 10 is based on the distributed capacitance of the unit under test being in the region of 4 pF, which is common for small coils. Higher distributed capacitances will lower the resonant frequency of the unit under test, and a factor smaller than 10 will prevail.) The unit under test shall then be connected across the capacitance terminals of the Q meter, taking care to avoid coupling between the unit under test and the comparison coil. The Q circuit shall then be re-resonated by means of the Q-tuning capacitor or the vernier-tuning capacitor, observing whether the capacitance has to be increased or decreased from its previous value, in order to restore resonance. If the capacitance has to be increased, the oscillator frequency shall be increased by 10 to 20 percent. If the capacitance has to be decreased, the oscillator frequency shall be decreased by the same amount. The unit under test shall then be disconnected from the Q meter, and the Q circuit shall be resonated to the new frequency by means of the Q-tuning capacitor. The previous procedure shall then be repeated, while at the same time changing the oscillator frequency by smaller increments as it approaches the resonant frequency of the unit under test, until the frequency reaches a value at which the Q-circuit capacitance is unchanged when the unit under test is connected or disconnected. The self-resonant frequency of the unit under test will then be the frequency of the oscillator and shall be accurately determined to within ±0.2 percent (see 3.8.3).

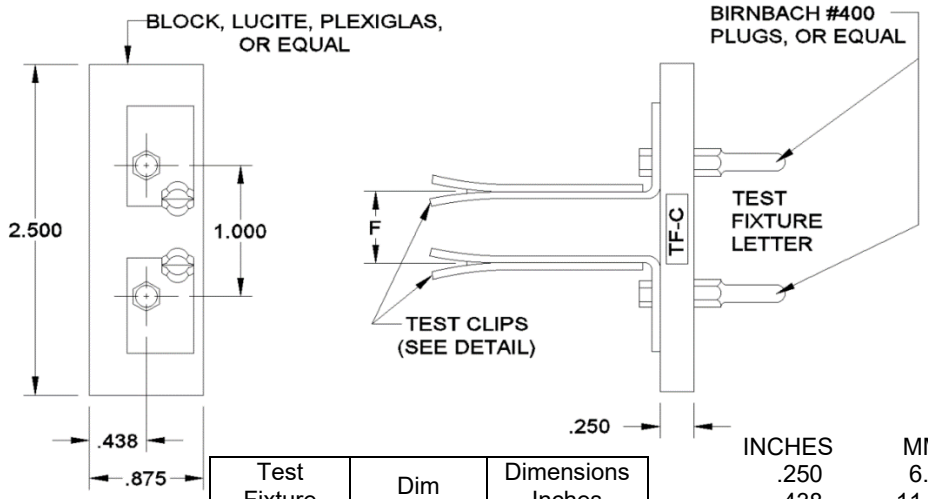

Test Fixture	Dim	Dimensions Inches
TF-C	F	.500
TF-D	F	.600
TF-E	F	.700

INCHES	MM
.250	6.35
.438	11.13
.500	12.70
.600	15.24
.700	17.78
.875	22.22
1.000	25.40
2.500	63.50

NOTES:
1. Dimensions are in inches.
2. Letters in blocks to be marked on fixture.
3. Unless otherwise specified, tolerance is ±.005 (.13 mm).
4. Metric equivalents are given for general information only and based on 1.00 inch = 25.4 mm.

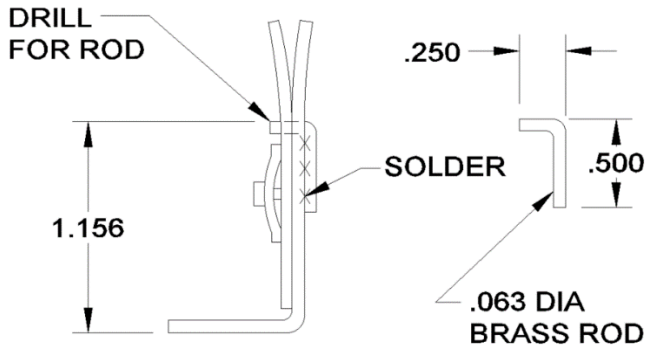

INCHES	MM
.063	1.60
.250	6.35
.500	12.70
1.156	29.36

RAPID TEST CLIP R OR L OR EQUAL

Detail

FIGURE 7. Test fixture TF-C, TF-D and TF-E (for radial leads) or equivalent.

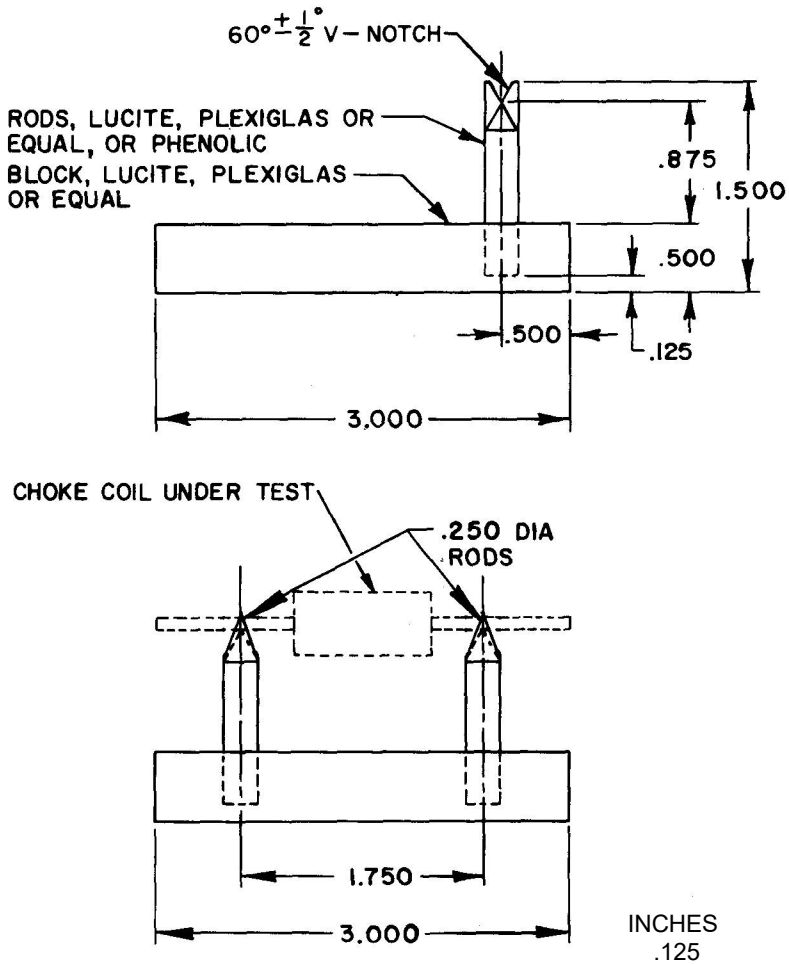

INCHES	MM
.125	3.18
.250	6.35
.500	12.70
.875	22.22
1.500	38.10
1.750	44.45
3.000	76.20

NOTES:
1. Dimensions are in inches.
2. Unless otherwise specified, tolerance is ±.005 (.13 mm).
3. Metric equivalents are given for general information only and based on 1.00 inch = 25.4 mm.

FIGURE 8. Test fixture TF-C, TF-D and TF-E (for radial leads) or equivalent.

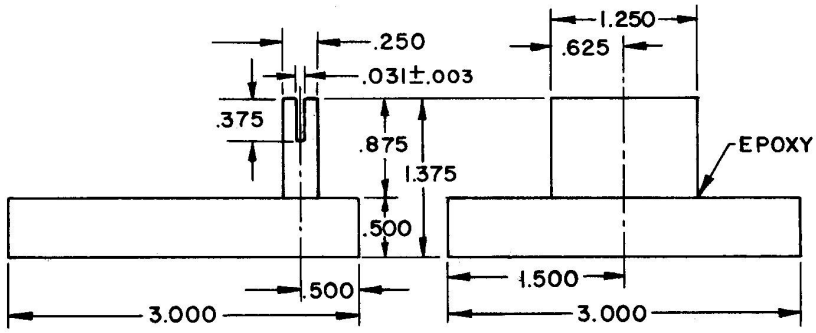

INCHES	MM
.003	.08
.031	.79
.250	6.35
.375	9.52
.500	12.70
.625	15.88
.875	22.22
1.250	31.75
1.500	38.10
3.000	76.20

NOTES:
1. Dimensions are in inches.
2. Unless otherwise specified, tolerance is ±.005 (.13 mm).
3. Material: Lucite or equivalent.
4. Metric equivalents are given for general information only and based on 1.00 inch = 25.4 mm.

FIGURE 9. Test figure for self resonant frequency test (for radial leads) or equivalent.

4.6.5.4 Percent coupling (when specified). The percent coupling of radio frequency coils, is determined by the table below. Two coils with the same dash number shall be placed side by side and in contact with each other. The inductance values are taken of the two coils, first series aiding (L_{T1}) and then series bucking (L_{T2}) at the frequency specified. The ac test voltage shall be the lowest voltage across the coil which will permit the bridge to operate satisfactory. The percent coupling is then calculated using the following formulas:

$$\text{Percent coupling} = \frac{M}{\sqrt{L_1 L_2}} X100$$

Where: $M = \frac{L_{T1} - L_{T2}}{4}$ = coefficient of mutual inductance in μH.

L_{T1} = Total inductance series aiding (μH).
L_{T2} = Total inductance series bucking (μH).

The inductance values L_1 and L_2 in μH are the measured values of the two coils under measurement at the specified frequency in table VIII.

TABLE VIII. Test equipment for percent coupling.

Inductance	Test frequency	Instrument
μH	kHz	
≤ 1.0	100.0	HP 36H bridge or equal
> 1.0 to 100 inclusive	10.0	General Radio 1632-A Inductance bridge or equal
> 100	1.0	General Radio 1632-A Inductance bridge or equal

Percent coupling test is applicable in qualification inspection, Group I, electrical characteristics (initial).

4.6.5.4.1 Percent coupling (alternate method). The percent coupling between two radio frequency coils is to be determined by measuring the voltage induced in the coil when a voltage is applied to an adjacent coil. In order to maintain reasonable impedance levels, the measurement is to be performed at 100 kHz for nominal inductances of 10 μH or less, at 10 kHz for nominal inductances less than or equal to 100 μH but greater than 10 μH, and at 1 kHz for inductances greater than 100 μH. The measurement circuit is shown on figure 10.

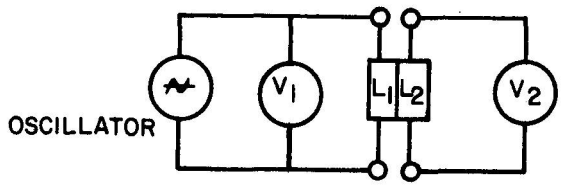

FIGURE 10. Test circuit for percent coupling (alternate method).

Equipment for 1 kHz and 10 kHz consists of HP Model 200 audio oscillator and Model 400 vacuum tube voltmeter; for 100 kHz Model 606 signal generator and Model 400 vacuum tube voltmeter, or equivalent.

The coils to be tested shall be taped or otherwise secured such that the bodies of the coils are kept parallel and in contact with each other to insure maximum coupling. The voltage levels shall be as low as possible to permit reliable readings of V_2. The inductance L should be measured at the same voltage level so that any saturation effects are taken into account.

The percent coupling is to be calculated using the equation:

$$\text{Percent coupling} = \sqrt{\frac{L_1}{L_2}}\frac{V_2}{V_1}X100$$

Where: L_1 = effective inductance of primary coil (measured at test frequency)
L_2 = effective inductance of secondary
V_1 = voltage measured across primary
V_2 = voltage measured across secondary

NOTE: This test may be performed using the Q meter for the oscillator at the standard test frequency allowing simultaneous reading of L_1. Reversing the coils allows reading L_2 and also a second measurement of coupling for verification or averaging.

The percent coupling is to be calculated using the equation:

When V_1 = .02 Q

$$\text{Percent coupling} = \frac{50V_2}{Q}\sqrt{\frac{L_1}{L_2}}X100$$

L_1 = effective inductance of primary coil (measured at test frequency)
L_2 = effective inductance of secondary coil
V_2 = voltage measured across secondary
Q = as measured

4.6.5.5 Incremental current inductance change (when specified). Incremental current inductance change is the dc required to cause a change of no more than five percent from the inductance measured with zero dc and the inductance measured with the specified value of incremental current (see 3.1). This test is performed using a General Radio type 1633-A incremental bridge, or equivalent, at 10 kHz for inductance values between 10 and 100 μH, and 1 kHz for inductance values greater than 100 μH, and the General Radio Type 1632-A inductance bridge, or equivalent at 10 kHz for inductance values less than 10 μH. The ac test voltage to be used across the coil for bridge operation shall be determined by the following formula:

$$E = f\sqrt{L}$$

Where: E = voltage (rms) in (mV)
f = frequency in (kHz)
L = nominal value of inductance in (μH)

This voltage is to be measured with a vacuum tube voltmeter connected directly across the coil. This voltmeter is disconnected prior to making the inductance measurement. The inductance of the coil under test shall be determined and recorded with zero dc in the coil. The specified value of incremental current shall be applied through the coil and this inductance measurement recorded. The change in inductance between the two values shall be less than five percent.

4.6.5.6 Effective parallel resistance (when specified). The test may be performed using model HP260A or HP4342A Q-meter, or HP250RX meter or equivalent test method. The oscillator controls shall be set at the specified measurement frequency followed by the insertion of a suitable work coil attached to the Q-meter coil terminals and the capacitor adjusted for resonance. The capacitance dial reading (C_1) and Q dial (Q_1) shall be recorded, also the "multiply Q by" meter dial, when it is other than XI which is preferable. Connect the coil under test to the capacitance terminals and restore resonance by adjusting the capacitor. Record the dial reading (Q_2). The effective parallel resistance of the inductor is calculated by the following formula:

$$R_p = \frac{159(Q_1)(Q_2)}{F(C_1)(Q_1 - Q_2)}$$

Where: Q_1 = Q of the Q circuit alone
Q_2 = Q of the Q circuit with the test coil connected to the Q circuit
R_p = effective resistance in kilohms (kΩ)
F = frequency in MHz
C_1 = capacitance in pF

4.6.5.6.1 Effective parallel resistance (alternate method). The test may be performed by direct measurement using an HP Model 250A RX meter for R_p values of 50 kΩ or less.

4.6.5.7 DC resistance. DC resistance of coils shall be measured in accordance with MIL-STD-202-303.

4.6.6 Temperature rise (see 3.9). The temperature rise of cylindrical insulated coils shall be determined as specified in 4.6.6.1. The temperature rise of the winding of other coils (when specified (see 3.1)) shall be determined by any suitable method (preferably by the resistance change method). This test shall be performed at the specified ambient temperature and with rated dc applied (see 3.1). When the resistance of the winding, measured at 5-minute intervals, remains constant, the temperature of the winding shall be considered stabilized. If the method used for determining the resistance of the winding requires the removal of power, the measurement shall be made within 10 seconds after the removal of power.

4.6.6.1 For cylindrical insulated coils. The coils under test shall be connected to a test fixture conforming to figure 11 with each wire lead wrapped one turn around the test fixture terminal and shall be soldered to the terminal or only soldered to Federal #1268 (U" Notch) terminals or equivalent, for uniform low contact resistance. The test fixture, with the attached coil, shall then be placed in a test chamber which allows forced air circulation to be shut off during testing. The test chamber shall be free of test area drafts and direct thermal radiation. A temperature indicating device with an accuracy of ±0.5°C shall be located in the area surrounding the coil under test, but not where it will be influenced by the temperature rise of the coil. The test chamber temperature shall then be stabilized at the specified ambient temperature (see 3.1). The dc resistance (r) shall be measured with one-tenth rated dc applied at the specified ambient temperature (t). When the resistance of the coil is stabilized, the resistance value shall be recorded. The ammeter-voltmeter method may be used for determining this resistance, provided that the accuracy of these meters is 0.5 percent or better and the resistance of the voltmeter is at leas 1,000Ω per volt. The rated dc (see 3.1) shall then be applied to the coil under test, when rated current is applied. When the resistance of the coil under test is stabilized with rated current applied, the resistance (r) and the test chamber temperature (T) shall be recorded. The temperature rise (ΔT) shall be calculated by the following formula:

$$\Delta T = \frac{R-r}{r}(t+234.5)-(T-t)$$

Where: ΔT = Temperature rise in °C above the specified ambient temperature of the coil under test.
R = Resistance of coil in ohms with rated dc applied at temperature (T+ ΔT).
r = Resistance of coil in ohms at temperature (t), the specified ambient temperature.
t = Stabilized specified ambient temperature in °C of the coil under test without dc applied.
T = Ambient temperature in °C (at time forced air circulation is shut off) with rated dc applied.
T shall not differ from t by more than 5°C.

4.6.7 Overload (see 3.10). DC equivalent to 1-1/2 times the specified rated current (see 3.1) shall be applied to the windings for 5 minutes. After the test, coils shall be examined for evidence of cracked cases, distorted or softened insulation, or loosened windings or terminals.

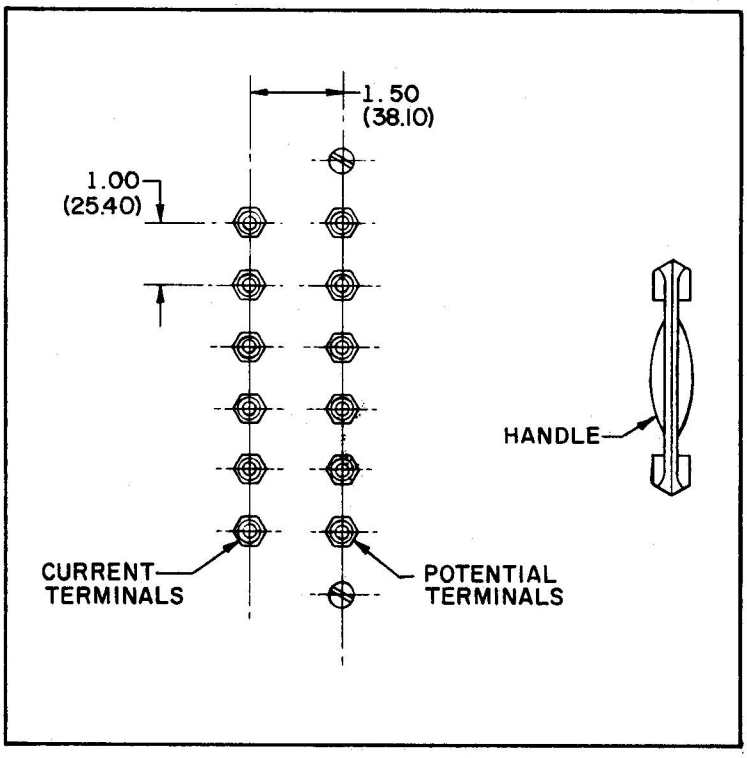

FRONT VIEW

NOTES:
1. Dimensions are in inches.
2. Metric equivalents are given for general information only and are based upon 1.00 inch = 25.4 mm.
3. Metric equivalents are in parentheses.

FIGURE 11. Test fixture for temperature rise test on insulated coils or equivalent.

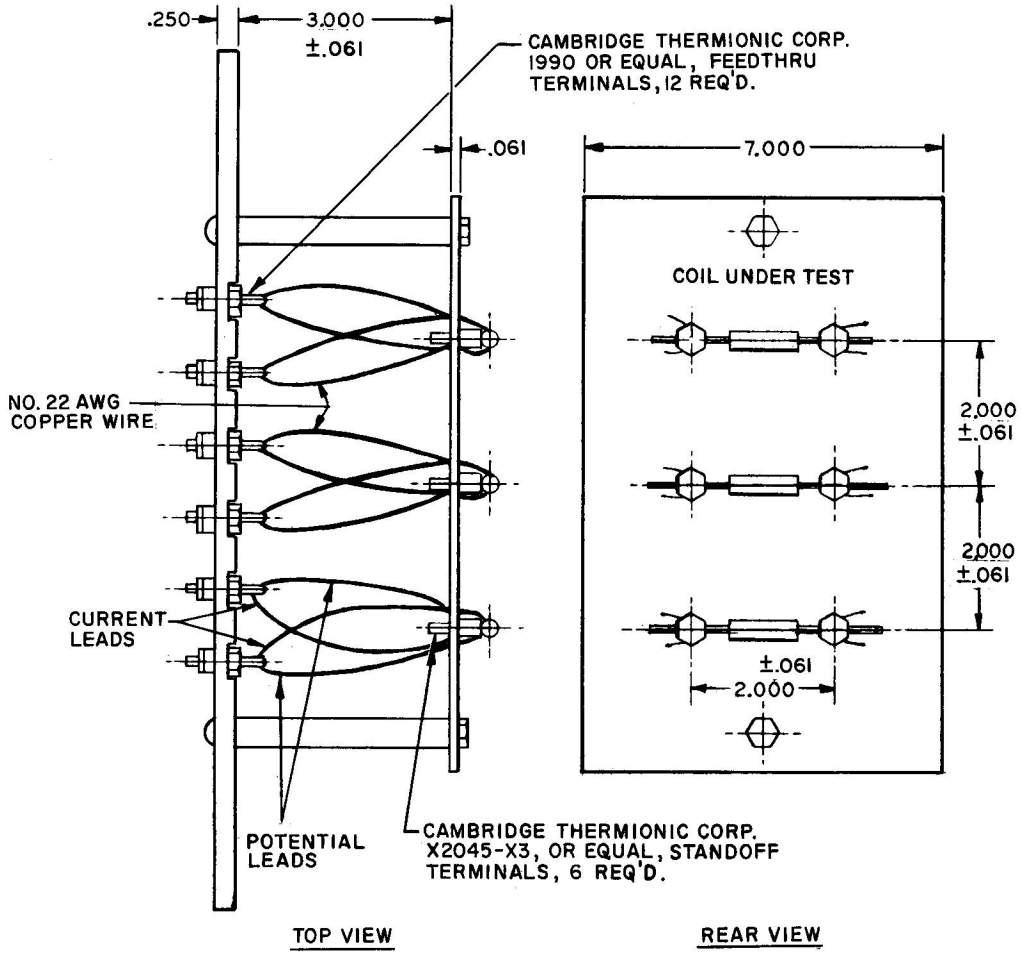

INCHES	MM
.061	1.55
.250	6.35
2.000	50.80
3.000	76.20
7.000	177.80

NOTES:
1. Dimensions are in inches.
2. Unless otherwise specified, tolerance is ±.005 (.13 mm).
3. Metric equivalents are given for general information only and are based upon 1.00 inch = 25.4 mm. Metric equivalents are in parentheses.

FIGURE 11. Test fixture for temperature rise test on insulated coils or equivalent – Continued.

4.6.8 Resistance to soldering heat (see 3.11). Terminals to be used for soldered connections shall be tested in accordance with MIL-STD-202-210. The following details shall apply:

a. Depth of immersion in molten solder: 0.25 inch from the nearest insulating material, or to ½ the exposed length of the terminal, whichever point is closer to the insulating material.
b. Test condition C.
c. After the test and soon as the solder terminals have returned to room ambient temperature, the following tests shall be made in the order shown:

(1) Visual: There shall be no evidence of solder reflow of internal connections as evidenced by solder flowing from the body of the device.
(2) Thermal shock: As specified in 4.6.2a.
(3) Terminal strength: As specified in 4.6.9. There shall be no evidence of mechanical damage or loosening of terminals.
(4) Electrical verification: Winding continuity shall be verified.

4.6.9 Terminal strength (see 3.12). Coils shall be tested as specified in 4.6.9.1 to 4.6.9.3.1, as applicable.

4.6.9.1 Pull.

4.6.9.1.1 All terminals. Each terminal shall be tested in accordance with MIL-STD-202-211. The following details shall apply:

a. Test condition letter – A.
b. Applied force – Unless otherwise specified (see 3.1), the applied force shall be 5 pounds.

4.6.9.2 Twist.

4.6.9.2.1 Solid wire lead terminals (axial and radial lead terminals, not printed circuit terminals). Each terminal shall be tested in accordance with test condition D, MIL-STD-202-211.

4.6.9.3 Torque.

4.6.9.3.1 All other terminals (excluding solid wire, axial, radial, and printed circuit terminals). All other terminals shall be subjected to a torque of 0.25 pound-inch applied in alternating directions, in a manner tending to produce rotation of the terminal.

4.6.10 Life test (see 3.13). Coils shall be tested in accordance with MIL-STD-202-108. The following details and exceptions shall apply:

a. Method of mounting -
   1. Wire-lead terminal coils – Supported by wire leads mounted by lightweight push-post terminals on each side of the body. The effective length of each terminal shall be 0.50 inch minimum. The panel racks or bread-boarding device shall be equipped with current sensing terminals. Coils shall be so arranged that the temperature on any one coil shall not appreciably influence the temperature of any other coil.
   2. All other terminals – Supported as specified (see 3.1). Coils shall be so arranged that the temperature of any one coil shall not appreciably influence the temperature on any other coil.
b. Ambient test temperature and tolerances unless otherwise specified -
   1. Phenolic core coils: 90 ±5°C.
   2. Iron core coils: 90 ±5°C.
   3. Ferrite core coils: 90 ±5°C.
   4. Other core coils: As specified (see 3.1).
c. Operating conditions – 100 percent rated cyclic loaded conditions (see 3.1), 1-1/2 hours on and ½ hour off, for the applicable number of hours specified and at the ambient test temperatures. “On time” shall be three-fourths of the total lapsed time.
d. Initial measurements – Measurements of inductance, Q, dc resistance, and self-resonant frequency shall be performed at room temperature prior to subjecting the coils to the specified test temperature. These initial measurements shall be used as reference in determining degradation limits after exposure of the test temperature after each of the specified test intervals.

e. Measurements during test – Measurements of inductance , Q, dc resistance, and self-resonant frequency shall be made after each of the following test intervals:

   250 +48 -0, 500 +48 -0, 1000 +48 -0, and 2000 +72 -0 hours. The coils shall be stabilized at room temperature for a minimum of ½ hour after removal from the test chamber prior to taking measurements. Coils shall remain at room temperature for no greater period of time than necessary to perform the required measurements before return to test chamber.
f. Degradation limits – Unless otherwise specified, coils shall not exceed the degradation limits specified (see 3.1 and 6.7) for the 250 hour test interval and for succeeding test intervals up to and including the 2000 hour test interval.
g. Examination after test – Coils shall be examined for evidence of mechanical damage.

4.6.11 Low temperature storage (see 3.14).

4.6.11.1 Mounting. Coils shall be mounted by their normal mounting means (see 3.1), in such a manner that there is at least 1 inch (25.4 mm) of free airspace around each coil, and in such a position with respect to the airstream that the mounting offers substantially no obstruction to the flow of air across and around the coil.

4.6.11.2 Procedure. Coils shall be placed in a cold chamber at -63°C ±5°C. Ninety-six hours after the coils have reached this temperature, the temperature of the chamber shall be gradually increased to room temperature within a period of not more than 8 hours. Coils shall be examined for evidence of cracks or other mechanical damage.

4.6.12 Vibration (see 3.15). Coils shall be tested in accordance with 4.6.12.1 or 4.6.12.2. Unless otherwise specified, high frequency vibration per 4.6.12.1 is applicable.

4.6.12.1 Vibration, high frequency. Coils shall be tested in accordance with MIL-STD-202-204. The following details shall apply:

a. Method of mounting – The coils shall be securely fastened by their normal mounting means (see 3.1). Units which are normally supported by their wire leads shall be mounted and soldered to rigidly-supported terminals, so spaced that the length of each lead is .250 in from the coil body.
b. Test condition letter – D (0.06-inch) double amplitude (maximum total excursion) or 20G, whichever is less, with 10 through 2000 Hz frequency.
c. Measurement during vibration – Each coil shall be monitored to determine electrical discontinuity by a method which shall at least be sensitive enough to monitor or register, automatically, any electrical discontinuity of 0..1 millisecond or greater duration.
e. Examination after vibration – Coils shall be examined for evidence of physical or mechanical damage, and winding continuity shall be tested as specified in 4.6.3.

4.6.12.2 Vibration, low frequency (when specified (see 3.1)). Coils shall be tested in accordance with MIL-STD-202-201.The following details shall apply:

a. Method of mounting – As specified in 4.6.12.1a.
b. Measurement during vibration – As specified in 4.6.12.1c.
c. Examination after vibration – As specified in 4.6.12.1d.

4.6.13 Shock (specified pulse) (see 3.16). Coils shall be tested in accordance with MIL-STD-202-213. The following details shall apply:

a. Method of mounting – Coils shall be mounted in relation to the test equipment in such a manner that the stress applied is in the direction which would be considered to be most detrimental. Cylindrical insulated coils shall be soldered to rigidly-supported terminals, so spaced that the length of each is 0.25 inch from the coil body.
b. Test condition letter – I.
c. Examination after test – Coils shall be tested for winding continuity as specified in 4.6.3, and examined for evidence of physical or mechanical damage.

4.6.14 Moisture resistance (grades 1 and 2 only) (see 3.17). Coils shall be tested in accordance with MIL-STD-202-106. The following details shall apply:

a. Mounting – On racks. Cylindrical insulated coils shall be soldered by their leads to rigid mounts or terminal lugs. The spacing of the mounts or terminal lugs shall be such that the length of each coil lead is approximately 0.25 inch when measured from the edge of the supporting terminal to the coil body. For polarization the coils shall be covered with a flat, corrosion resistant metal strap whose width is equal to the length of the coils and of sufficient thickness to be rigid. A 0.075 inch thick layer of conductive, moisture resistant, resilient material, having a resistivity of less than 1000 Ω cm, shall be bonded to the surface of the strap next to the coils. Sufficient contact pressure shall be maintained by applying a compressive force between the strap and a cylindrical, corrosion resistant, nonconducting rod held beneath the coils, as shown in figure 2. The mounting strap may be used to cover one or more coils at a time. All mounting straps shall be removed to perform step 7a and shall be replaced prior to returning the coils to the humidity chamber. Step 7b shall not be applicable.
b. Polarization - Unless otherwise specified (see 3.1), during steps 1 to 6 inclusive, a polarizing voltage of 100 V dc shall be applied. The voltage shall be positive with respect to the mounting hardware or case. For coils having no mounting hardware, the polarizing voltage shall be applied as specified (see 3.1).
c. Final measurements – Following the 1-1/2 to 3-1/2 hour conditioning period, unless otherwise specified (see 3.1), the units shall be removed to room ambient conditions. The specified electrical characteristics (see 3.1), shall be measured as specified in 4.6.5 and the units shall be examined for evidence of corrosion.

4.6.15 Fungus (see 3.18). Unless certification is provided, coils shall be tested in accordance with method 508 of MIL-STD-810.

4.6.16 Solderability (see 3.19). Coils shall be tested in accordance with MIL-STD-202-208. (both leads on each unit shall be tested.)

4.6.17 Resistance to solvents (see 3.20). Coils shall be tested in accordance with MIL-STD-202-215. The following details shall apply:

a. Portion of specimen to be brushed – Marked portion of coil.
b. Number of specimens to be tested – See table IV.
c. Permissible extent of damage to the specimen – See 3.20.

4.6.18 Flammability (see 3.21). Coils shall be tested in accordance with MIL-STD-202-211. The following details and exceptions shall apply:

a. Point of impingement of applied flame – The flame shall be applied to the body and one end of each coil.
b. Allowable time for burning of visible flame on specimen - 3 minutes maximum.
c. Examinations during and after test – Coils shall be examined for evidence of violent burning which results in an explosive type fire, dripping of flame material, and visible burning which continues beyond the allowable duration after removal of the applied flame.

5. PACKAGING.

5.1 Packaging. For acquisition purposes, the packaging requirements shall be as specified in the contract or order (see 6.2). When the packaging of materiel is to be performed by DoD or in-house contractor personnel, these personnel need to contact the responsible packaging activity to ascertain packaging requirements. Packaging requirements are maintained by the Inventory Control Point's packaging activities within the Military Service or Defense Agency, or within the military service's system commands. Packaging data retrieval is available from the managing Military Department's or Defense Agency's automated packaging files, CD-ROM products, or by contacting the responsible packaging activity.

6. NOTES.

(This section contains information of a general or explanatory nature which may be helpful, but is not mandatory.)

6.1 Intended use. The coils covered by this specification are suitable for conventional application. Manufacturers using these parts in printed circuits involving dip-soldering should check the assembly after processing to verify that there is no degradation of the coils.

6.2 Acquisition requirements. Acquisition documents should specify the following:

a. Title, number, and date of this specification.
b. Title, number, and date of applicable specification sheet (or military standard), the military part number, and the complete type designation (see 1.2.1 and 3.1).
c. Packaging requirements (see 5.1).

6.3 Qualification. With respect to products requiring qualification, awards will be made only for products which are, at the time of award of contract, qualified for inclusion in Qualified Products List QPL No. 15305 whether or not such products have actually been listed by that date. The attention of the contractors is called to these requirements, and manufacturers are urged to arrange to have the products that they propose to offer to the Federal Government tested for qualification in order that they may be eligible to be awarded contracts or orders for the products covered by this specification. Information pertaining to qualification of products may be obtained from the DLA Land and Maritime, ATTN: DLA Land and Maritime-VQP, PO Box 3990, Columbus, OH 43218-3990, or by e-mail to vqp.chief@dla.mil. An online listing of products qualified to this specification may be found in the Qualified Products Database (QPD) at https://assist.dla.mil.

6.4 Comparison standards. Comparison standards will be established during qualification . The values of electrical characteristics (see 4.6.5) which are to be referred to comparison standards will be marked on or permanently attached to each coil. One unit will be returned to the contractor for use in measuring those characteristics which are to be referred to the comparison standard, and two units will be retained by the Government (see 3.1, and 4.4.2.1).

6.5 Supersession data. The intermediate and radio frequency transformers formerly covered by MIL-PRF-15305C are now covered by MIL-T-55631.

6.6 Dielectric withstanding voltage. The following method can be used in determining the dielectric withstanding voltages required for special coil designs.

Working voltage 1/	RMS test voltage, 60 Hz
<30	100
30 to 174 incl	500
175 to 700 incl	2.8 x working voltage
>700	1.4 x working voltage +1,000 V

1/ The working voltage is defined as the maximum instantaneous voltage stress that may appear, under normal rated operation, across the insulation being considered.

6.7 Degradation limits.

6.7.1 Phenolic and iron cores. The degradation limits for phenolic and iron core coils will not exceed the following limits:

Inductance	±5 percent
Q	±10 percent
Self resonant frequency	±8 percent
Direct current resistance	±3 percent +0.001Ω

6.7.2 Ferrite cores. The degradation limits for Ferrite core coils will not exceed the following limits:

Inductance -	±10 percent
Q -	±20 percent
Self resonant frequency - - - - - - - - - - - - - - -	±15 percent
Direct current resistance - - - - - - - - - - - - - -	±5 percent +0.001Ω

6.8 Tin whisker growth. The use of alloys with tin content greater than 97 percent, by mass, may exhibit tin whicker growth problems after manufacture. Tin whiskers may occur anytime from a day to years after manufacture and can develop under typical operating conditions, on products that use such materials. Conformal coatings applied over top of a whisker-prone surface will not prevent the formation of tin whiskers. Alloys of 3 percent lead, by mass, have shown to inhibit the growth of tin whiskers. For additional information on this matter, refer to ASTM-B-545 (Standard Specification for Electrodeposited Coatings of Tin).

6.9 Solder and soldering flux (see 3.3.7) It is recommended that solder and soldering flux to be in accordance with J-STD-004, J-STD-005, and J-STD-006.

6.10 Subject term (key word) listing.

Coils, cylindrical, insulated
Cores, ferrite, iron, phenolic

6.11 Amendment notations. The margins of this specification are marked with vertical lines to indicate modifications generated by this amendment. This was done as a convenience only and the Government assumes no liability whatsoever for any inaccuracies in these notations. Bidders and contractors are cautioned to evaluate the requirements of this document based on the entire content irrespective of the marginal notations.

APPENDIX A

PROCEDURE FOR QUALIFICATION INSPECTION

A. SCOPE

A.1 Scope. This appendix details the procedure for submission of samples, with related data, for qualification inspection of coils covered by this specification. The procedure for extending qualification of the required sample to other coils covered by this specification is also outlined herein. This Appendix is a mandatory part of the specification. The information contained herein is intended for compliance.

A.2. SUBMISSION

A.2.1 Sample

A.2.1.1 Single-type submission. A sample consisting of 27 sample units of each core material, style and individual inductance value for which qualification is sought shall be submitted. Two additional sample units shall be submitted for fungus test if certification is not provided.

A.2.1.2 Combined-type submission. A sample consisting of 18 sample units of the lowest inductance value and 18 sample units of the highest inductance value for each style covered by a single specification sheet (or Military Standard) for which qualification is sought shall be submitted. Ten additional samples of any inductance value shall be submitted for group VI tests. Two additional sample units of any inductance value shall be submitted for the fungus test if certification is not provided.

A.3 Description of items. The manufacturer shall submit a detailed description of the coils being submitted for inspection, including the material used for the coil form, encapsulation of molding, type of winding, wire size, insulation, etc.

A.4 Identification for coils. Coils for which a coordinated MS Military Standard exists shall be identified by the type designation of the coil described in the specification. Coils for which MS Military Standards do not exist shall be identified by a type designation and by a descriptive document maintained by the responsible agency.

A.5. EXTENSION OF QUALIFICATION

A.5.1 Single-type. Qualification shall be restricted to the single-type designation submitted.

A.5.2 Combined-type submission. Qualification shall be restricted to all of the inductance values within a style covered on a single specification sheet (or military standard) between the values passing qualification inspection.

Custodians:
Army - CR
Navy - EC
Air Force - 85
DLA – CC

Preparing activity:
DLA - CC

(Project 5950-2023-013)

Review activities:
Army AR, CR4, MI
Navy – AS, CG, OS, SH
Air Force 19

NOTE: The activities listed above were interested in this document as of the date of this document. Since organizations and responsibilities can change, you should verify the currency of the information above using the ASSIST Online database at https://assist.dla.mil