INCH-POUND

MIL-M-38510/71D
2 November 2005
SUPERSEDING
MIL-M-38510/71C
23 July 1984

MILITARY SPECIFICATION

MICROCIRCUITS, DIGITAL, BIPOLAR, SCHOTTKY TTL, FLIP-FLOPS, CASCADABLE, MONOLITHIC SILICON

Inactive for new design after 23 August 1996.

This specification is approved for use by all Departments and Agencies of the Department of Defense.

The requirements for acquiring the product herein shall consist of this specification sheet and MIL-PRF 38535

1. SCOPE

1.1 Scope. This specification covers the detail requirements for monolithic, silicon, Schottky TTL, bistable logic microcircuits. Two product assurance classes and a choice of case outlines and lead finishes are provided for each type and are reflected in the complete part number. For this product, the requirements of MIL-M-38510 have been superseded by MIL-PRF-38535, (see 6.4).

1.2 Part or Identifying Number (PIN). The PIN is in accordance with MIL-PRF-38535, and as specified herein.

1.2.1 Device types. The device types are as follows:

Device type	Circuit
01	Dual, D-type edge triggered flip-flop
02	Dual, J-K edge triggered flip-flop
03	Dual, J-K edge triggered flip-flop, no clear
04	Dual, J-K edge triggered flip-flop, common clear and clock
05	Hex, D-type edge triggered flip-flop
06	Quad, D-type edge triggered flip-flop

1.2.2 Device class. The device class is the product assurance level as defined in MIL-PRF-38535.

1.2.3 Case outlines. The case outlines are as designated in MIL-STD-1835 and as follows:

Outline letter	Descriptive designator	Terminals	Package style
A	GDFP5-F14 or CDFP6-F14	14	Flat pack
B	GDFP4-F14	14	Flat pack
C	GDIP1-T14 or CDIP2-T14	14	Dual-in-line
D	GDFP1-F14 or CDFP2-F14	14	Flat pack
E	GDIP1-T16 or CDIP2-T16	16	Dual-in-line
F	GDFP2-F16 or CDFP3-F16	16	Flat-pack
X	CQCC2-N20	20	Square chip carrier
2	CQCC1-N20	20	Square chip carrier

Comments, suggestions, or questions on this document should be addressed to: Commander, Defense Supply Center Columbus, ATTN: DSCC-VAS, P. O. Box 3990, Columbus, OH 43218-3990, or emailed to bipolar@dla.mil. Since contact information can change, you may want to verify the currency of this address information using the ASSIST Online database at http://assist.daps.dla.mil.

AMSC N/A FSC 5962

1.3 Absolute maximum ratings.

Supply voltage range ..... -0.5 V dc to +7.0 V dc
Input voltage range ..... -1.2 V dc at -18 mA to 5.5 V dc
Storage temperature range ..... -65°C to +150°C
Maximum power dissipation per flip-flop, (P_D) 1/
Device types 01, 02, 03, 04 ..... 137 mW dc
Device type 05 ..... 132 mW dc
Device type 06 ..... 129 mW dc
Lead temperature (soldering 10 seconds) ..... 300°C
Thermal resistance, junction-to-case (θ_{JC}) ..... (See MIL-STD-1835)
Junction temperature (T_J) 2/ ..... 175°C

1.4 Recommended operating conditions.

Supply voltage (V_{CC}) ..... 4.5 V dc minimum to 5.5 V dc maximum
Minimum high level input voltage (V_{IH}) ..... 2.0 V dc
Maximum low level input voltage (V_{IL}) 3/ ..... 0.8 V dc
(see figures 5 through 16 for individual device type input-setup time and input-hold time.)
Case operating temperature range (T_C) ..... -55°C to 125°C

2.0 APPLICABLE DOCUMENT

2.1 General. The documents listed in this section are specified in sections 3, 4, or 5 of this specification. This section does not include documents cited in other sections of this specification or recommended for additional information or as examples. While every effort has been made to ensure the completeness of this list, document users are cautioned that they must meet all specified requirements of documents cited in sections 3, 4, or 5 of this specification, whether or not they are listed.

2.2 Government documents.

2.2.1 Specifications and standards. The following specifications and standards form a part of this specification to the extent specified herein. Unless otherwise specified, the issues of these documents are those cited in the solicitation or contract.

DEPARTMENT OF DEFENSE SPECIFICATIONS

MIL-PRF-38535 - Integrated Circuits (Microcircuits) Manufacturing, General Specification for.

DEPARTMENT OF DEFENSE STANDARDS

MIL-STD-883 - Test Method Standard for Microelectronics.
MIL-STD-1835 - Interface Standard Electronic Component Case Outlines

(Copies of these documents are available online at http://assist.daps.dla.mil/quicksearch/ or http://assist.daps.dla.mil or from the Standardization Document Order Desk, 700 Robbins Avenue, Building 4D, Philadelphia, PA 19111-5094.)

2.3 Order of precedence. In the event of a conflict between the text of this specification and the references cited herein, the text of this document takes precedence. Nothing in this document, however, supersedes applicable laws and regulations unless a specific exemption has been obtained.

1/ Must withstand the added P_D due to short circuit condition (e.g. I_{OS}).
2/ Maximum junction temperature should not be exceeded except in accordance with allowable short duration burn-in screening condition in accordance with MIL-PRF-38535.
3/ V_{IL} = 0.7 V dc at +125°C.

3. REQUIREMENTS

3.1 Qualification. Microcircuits furnished under this specification shall be products that are manufactured by a manufacturer authorized by the qualifying activity for listing on the applicable qualified manufacturers list before contract award (see 4.3 and 6.3).

3.2 Item requirements. The individual item requirements shall be in accordance with MIL-PRF-38535 and as specified herein or as modified in the device manufacturer's Quality Management (QM) plan. The modification in the QM plan shall not affect the form, fit, or function as described herein.

3.3 Design, construction, and physical dimensions. The design, construction, and physical dimensions shall be as specified in MIL-PRF-38535 and herein.

3.3.1 Logic diagrams. The logic diagrams shall be as specified on figure 1.

3.3.2 Terminal connections. The terminal connections shall be as specified on figure 2.

3.3.3 Truth tables. The truth tables shall be as specified on figure 3.

3.3.4 Schematic circuits. The schematic circuits shall be maintained by the manufacturer and made available to the qualifying activity and the preparing activity upon request.

3.3.5 Case outlines. Case outlines shall be as specified in 1.2.3.

3.4 Lead material and finish. Lead material and finish shall be in accordance with MIL-PRF-38535 (see 6.6).

3.5 Electrical performance characteristics. The electrical performance characteristics are as specified in table 1 and apply over the full recommended case operating temperature range, unless otherwise specified.

3.6 Electrical test requirements. The electrical test requirements for each device class shall be the subgroups specified in table II. The electrical tests for each subgroup are described in table III.

3.7 Marking. Marking shall be in accordance with MIL-PRF-38535.

3.8 Microcircuit group assignment. The devices covered by this specification shall be in microcircuit group number 10 (see MIL-PRF-38535, appendix A).

TABLE I. Electrical performance characteristics.

Test	Symbol	Conditions 1/ $-55°C \le T_C \le +125°C$	Device type	Limits		Units
				Min	Max	
High-level output voltage	V_{OH}	V_{CC} = 4.5 V; I_{OH} = -1 mA	All	2.5 2/	- - -	V
Low-level output voltage	V_{OL}	V_{CC} = 4.5 V; I_{OL} = 20 mA	All		0.5 2/	V
Input clamp voltage	V_{IC}	V_{CC} = 4.5 V; I_{IN} = -18 mA; T_C = +25°C	All		-1.2	V
Low-level input current at D input	I_{IL1}	V_{CC} = 5.5 V; V_{IN} = 0.5 V	01		-2	mA
Low-level input current at clear input	I_{IL2}	V_{CC} = 5.5 V; V_{IN} = 0.5 V	01		-6.0	mA
Low-level input current at preset input	I_{IL3}	V_{CC} = 5.5 V; V_{IN} = 0.5 V	01		-4.0	mA
Low-level input current at clock input	I_{IL4}	V_{CC} = 5.5 V; V_{IN} = 0.5 V	01, 02, 03		-4.0	mA
Low-level input current at J or K inputs	I_{IL1}	V_{CC} = 5.5 V; V_{IN} = 0.5 V	02, 03, 04		-1.6	mA
Low-level input current at clear input	I_{IL2}	V_{CC} = 5.5 V; V_{IN} = 0.5 V	02		-7.0	mA
Low-level input current at clear input	I_{IL2}	V_{CC} = 5.5 V; V_{IN} = 0.5 V	04		-14.0	mA
Low-level input current at preset input	I_{IL3}	V_{CC} = 5.5 V; V_{IN} = 0.5 V	02, 03, 04		-6.0	mA
Low-level input current at clock input	I_{IL4}	V_{CC} = 5.5 V; V_{IN} = 0.5 V	04		-8.0	mA
Low-level input current, all inputs	I_{IL1}	V_{CC} = 5.5 V; V_{IN} = 0.5 V	05, 06		-2.0	mA
High-level input current at J, K, or D inputs	I_{IH1}	V_{CC} = 5.5 V; V_{IN} = 2.7 V	01, 02, 03, 04		50	µA
High-level input current at clear input	I_{IH2}		01		150	µA

See footnotes at end of table.

TABLE I. Electrical performance characteristics - Continued.

Test	Symbol	Conditions 1/ $-55°C \le T_C \le +125°C$	Device type	Limits Min	Limits Max	Units
High-level input current at preset input	I_{IH3}	V_{CC} = 5.5 V; V_{IN} = 2.7 V	01, 02 03, 04		100	µA
High-level input current at clock input	I_{IH4}		01, 02, 03		100	µA
High-level input current, all inputs	I_{IH5}	V_{CC} = 5.5 V; V_{IN} = 5.5 V	All		1.0	mA
High-level input current, all inputs	I_{IH1}	V_{CC} = 5.5 V; V_{IN} = 2.7 V	05, 06		50	µA
High-level input current at clear input	I_{IH2}		02		100	µA
High-level input current at clear input	I_{IH2}		04		200	µA
High-level input current at clock input	I_{IH4}		04		200	µA
Short-circuit output current	I_{OS}	V_{CC} = 5.5 V 3/	All	-40	-110	mA
Supply current	I_{CC}	V_{CC} = 5.5 V 4/	01, 02 03, 04		50	mA
		V_{CC} = 5.5 V 5/	05		144	mA
		V_{CC} = 5.5 V 5/	06		96	mA
Maximum collector cutoff current	I_{CEX}	V_{CC} = 5.5 V; V_{OH} = 5.5 V V_{IH} = 5.5 V; V_{IL} = GND	All		250	µA
Maximum clock frequency	f_{MAX}	V_{CC} = 5.0 V; R_L = 280 Ω; C_L = 50 pF	01	55		MHz
Propagation delay time, low-to-high level, preset or clear to Q or $\overline{Q}$	t_{PLH1}			2	10	ns
Propagation delay time, low-to-high level, clock to Q or $\overline{Q}$	t_{PLH2}			2	16.0	ns

See footnotes at end of table.

TABLE I. Electrical performance characteristics - Continued.

Test	Symbol	Conditions 1/ -55°C ≤ T_C ≤ +125°C	Device type	Limits		Units
				Min	Max	
Propagation delay time, high-to-low level, clock to Q or $\overline{Q}$	t_{PHL2}	V_{CC} = 5.0 V; R_L = 280 Ω; C_L = 50 pF	01	2	13.0	ns
Propagation delay time, high-to-low level, preset or clear to Q or $\overline{Q}$. Clock high	t_{PHL3}			2	19.0	ns
Propagation delay time, high-to-low level, preset or clear to Q or $\overline{Q}$. Clock low	t_{PHL4}			2	12.5	ns
Maximum clock frequency	f_{MAX}	V_{CC} = 5.0 V; R_L = 280 Ω; C_L = 50 pF	02	60		MHz
Propagation delay time, low-to-high level, preset or clear to Q or $\overline{Q}$	t_{PLH1}			2	11.0	ns
Propagation delay time, low-to-high level, clock to Q or $\overline{Q}$	t_{PLH2}			2	11.0	ns
Propagation delay time, high-to-low level, clock to Q or $\overline{Q}$	t_{PHL2}			2	11.0	ns
Propagation delay time, high-to-low level, preset or clear to Q or $\overline{Q}$. Clock high	t_{PHL3}			2	11.0	ns
Maximum clock frequency	f_{MAX}	V_{CC} = 5.0 V; R_L = 280 Ω; C_L = 50 pF	03	60		MHz
Propagation delay time, low-to-high level, preset to Q	t_{PLH1}			2	11.0	ns
Propagation delay time, high-to-low level, preset to $\overline{Q}$	t_{PHL1}			2	11.0	ns
Propagation delay time, low-to-high level, clock to Q	t_{PLH2}			2	11.0	ns
Propagation delay time, high-to-low level, clock to $\overline{Q}$	t_{PHL2}			2	11.0	ns

See footnotes at end of table.

TABLE I. Electrical performance characteristics - Continued.

Test	Symbol	Conditions 1/ -55°C ≤ T_C ≤ +125°C	Device type	Limits		Units
				Min	Max	
Propagation delay time, low-to-high level, clock to $\overline{Q}$	t_{PLH3}	V_{CC} = 5.0 V; R_L = 280 Ω; C_L = 50 pF	03	2	11.0	ns
Propagation delay time, high-to-low level, clock to Q	t_{PHL3}			2	11.0	ns
Maximum clock frequency	f_{MAX}	V_{CC} = 5.0 V; R_L = 280 Ω; C_L = 50 pF	04	60 6/		MHz
Propagation delay time, low-to-high level, preset or clear to Q or $\overline{Q}$	t_{PLH1}			2	11.0	ns
Propagation delay time, high-to-low level, clock to Q or $\overline{Q}$	t_{PHL2}			2	11.0	ns
Propagation delay time, low-to-high level, clock to Q or $\overline{Q}$	t_{PLH2}			2	11.0	ns
Propagation delay time, high-to-low level, preset or clear to Q or $\overline{Q}$. Clock high	t_{PHL3}			2	11.0	ns
Maximum clock frequency	f_{MAX}	V_{CC} = 5.0 V; R_L = 280 Ω; C_L = 50 pF	05	55 5/		MHz
Propagation delay time, low-to-high level, clock to Q	t_{PLH1}			2.0	17.0	ns
Propagation delay time, high-to-low level, clock to Q	t_{PHL1}			2.0	23.0	ns
Propagation delay time, low-to-high level, clock to Q, clear inactive	t_{PLH2}			2.0	17.0	ns
Propagation delay time, high-to-low level, clear to Q	t_{PHL2}			2.0	29.0	ns

See footnotes at end of table.

TABLE I. Electrical performance characteristics - Continued.

Test	Symbol	Conditions 1/ $-55°C \le T_C \le +125°C$	Device type	Limits		Units
				Min	Max	
Maximum clock frequency	f_{MAX}	V_{CC} = 5.0 V; R_L = 280 Ω; C_L = 50 pF	06	55 5/		MHz
Propagation delay time, low-to-high level, clock to Q or $\overline{Q}$	t_{PLH1}			2.0	17.0	ns
Propagation delay time, high-to-low level, clock to Q or $\overline{Q}$	t_{PHL1}			2.0	23.0	ns
Propagation delay time, low-to-high level, clock to Q, clear inactive	t_{PLH2}			2.0	17.0	ns
Propagation delay time, high-to-low level, clear to Q	t_{PHL2}			2.0	29.0	ns
Propagation delay time, low-to-high level, clear to Q	t_{PLH3}			2.0	20.0	ns
Propagation delay time, high-to-low level, clock to Q, clear inactive	t_{PHL3}			2	23.0	ns

1/ Complete terminal conditions shall be as specified in table III.
2/ At T_C = +125°C, V_{IL} = 0.7 V, V_{OL} maximum = 0.45 V.
3/ Not more than one output should be shorted at a time, duration of short circuit not to exceed 5 seconds.
4/ With all outputs open, I_{CC} is measured with the Q and $\overline{Q}$ outputs high in turn. At the time of the measurement, the clock input is grounded.
5/ With all outputs open and 5.5 applied to all data and clear inputs, I_{CC} is measured after a momentary ground, then 5.5 V is applied to clock.
6/ f_{MAX}, minimum limit specified is the frequency of the input pulse. The output frequency shall be one-half of the input frequency.

TABLE II. Electrical test requirements.

MIL-PRF-38535 Test requirement	Subgroups (see table III)	
	Class S Devices	Class B Devices
Interim electrical parameters	1	1
Final electrical test parameters	1*, 2, 3, 7, 9, 10, 11	1*, 2, 3, 7 9
Group A test requirements	1, 2, 3, 7, 8, 9, 10, 11	1, 2, 3, 7, 8, 9, 10, 11
Group B electrical test parameters when using the method 5005 QCI option	1, 2, 3, 7, 8, 9, 10, 11	N/A
Groups C end point electrical parameters	1, 2, 3, 7, 8, 9, 10, 11	1, 2, 3
Group D end point electrical parameters	1, 2, 3	1, 2, 3

*PDA applies to subgroup 1.

4. VERIFICATION

4.1 Sampling and inspection. Sampling and inspection procedures shall be in accordance with MIL-PRF-38535 or as modified in the device manufacturer's Quality Management (QM) plan. The modification in the QM plan shall not effect the form, fit, or function as described herein.

4.2 Qualification inspection. Qualification inspection shall be in accordance with MIL-PRF-38535.

4.3 Screening. Screening shall be in accordance with MIL-PRF-38535 and shall be conducted on all devices prior to qualification and conformance inspection. The following additional criteria shall apply:

a. The burn-in test duration, test condition, and test temperature, or approved alternatives shall be as specified in the device manufacturer's QM plan in accordance with MIL-PRF-38535. The burn-in test circuit shall be maintained under document control by the device manufacturer's Technology Review Board (TRB) in accordance with MIL-PRF-38535 and shall be made available to the acquiring or preparing activity upon request. The test circuit shall specify the inputs, outputs, biases, and power dissipation, as applicable, in accordance with the intent specified in test method 1015 of MIL-STD-883.

b. Interim and final electrical test parameters shall be as specified in table II, except interim electrical parameters test prior to burn-in is optional at the discretion of the manufacturer.

c. Additional screening for space level product shall be as specified in MIL-PRF-38535.

4.4 Technology Conformance Inspection (TCI). Technology conformance inspection shall be in accordance with MIL-PRF-38535 and herein for groups A, B, C, and D inspections (see 4.4.1 through 4.4.4).

4.4.1 Group A inspection. Group A inspection shall be in accordance with table III of MIL-PRF-38535 and as follows:

a. Tests shall be as specified in table II herein.

b. Subgroups 4, 5, and 6 shall be omitted.

4.4.2 Group B inspection. Group B inspection shall be in accordance with table II of MIL-PRF-38535.

4.4.3 Group C inspection. Group C inspection shall be in accordance with table IV of MIL-PRF-38535 and as follows:

a. End point electrical parameters shall be as specified in table II herein.

b. The steady-state life test duration, test condition, and test temperature, or approved alternatives shall be as specified in the device manufacturer's QM plan in accordance with MIL-PRF-38535. The burn-in test circuit shall be maintained under document control by the device manufacturer's Technology Review Board (TRB) in accordance with MIL-PRF-38535 and shall be made available to the acquiring or preparing activity upon request. The test circuit shall specify the inputs, outputs, biases, and power dissipation, as applicable, in accordance with the intent specified in test method 1005 of MIL-STD-883.

4.4.4 Group D inspection. Group D inspection shall be in accordance with table V of MIL-PRF-38535. End-point electrical parameters shall be as specified in table II herein.

4.5 Methods inspection. Methods of inspection shall be as specified in the appropriate tables and as follows:

4.5.1 Voltage and current. All voltages given are referenced to the microcircuit ground terminal. Currents given are conventional current and positive when flowing into the referenced terminal.

DEVICE TYPE 01

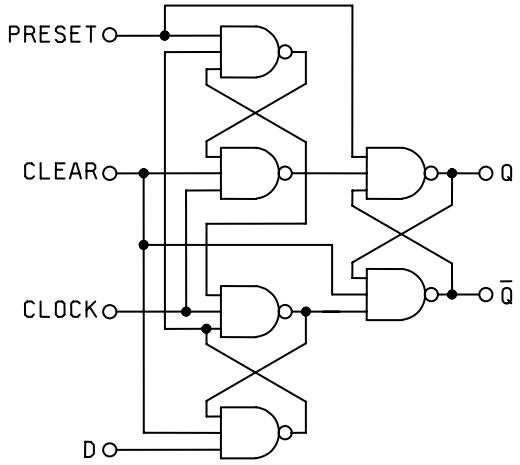

DEVICE TYPE 02

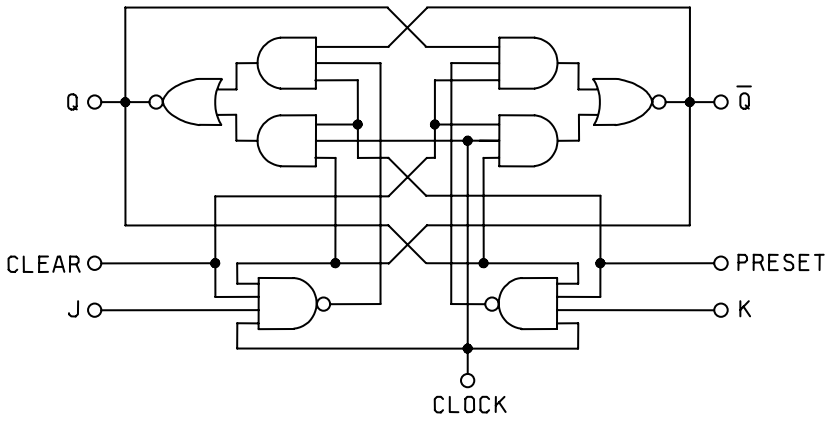

Figure 1. Logic diagrams.

DEVICE TYPE 03

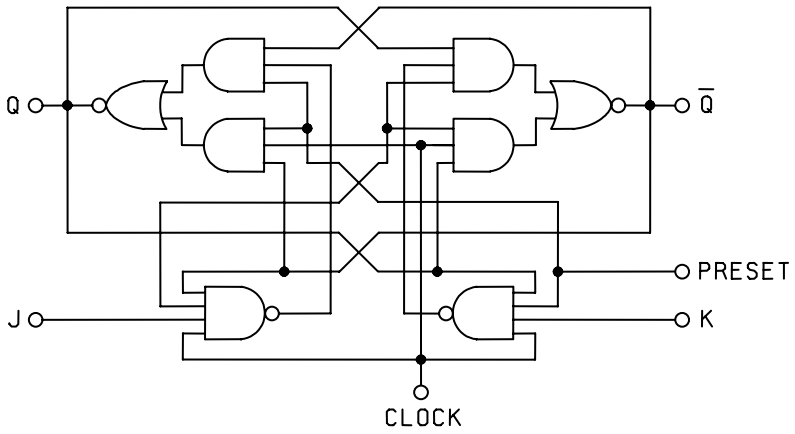

DEVICE TYPE 04

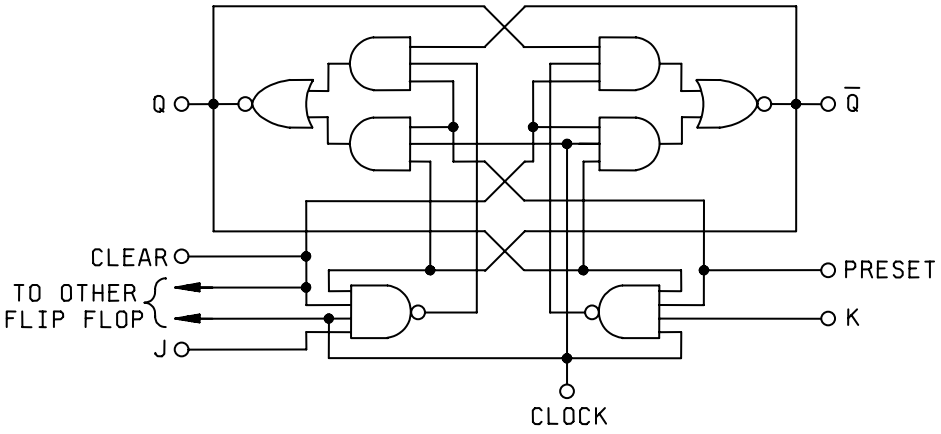

Figure 1. Logic diagrams - Continued.

DEVICE TYPE 05

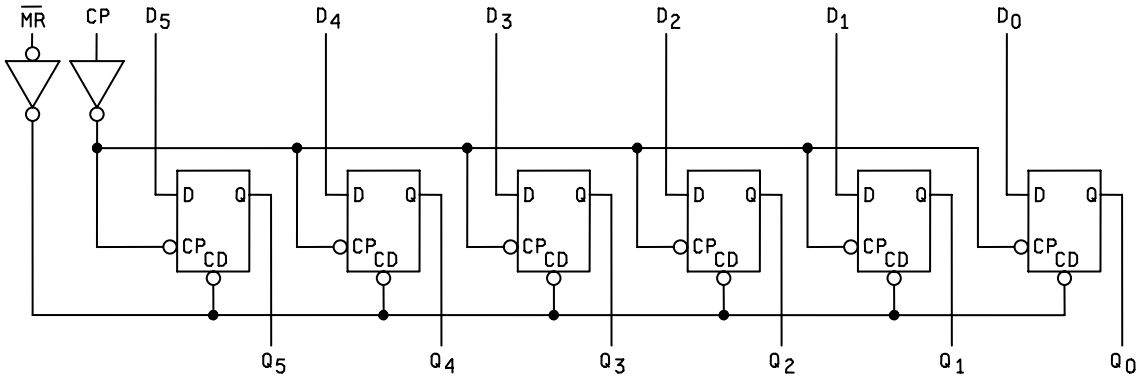

DEVICE TYPE 06

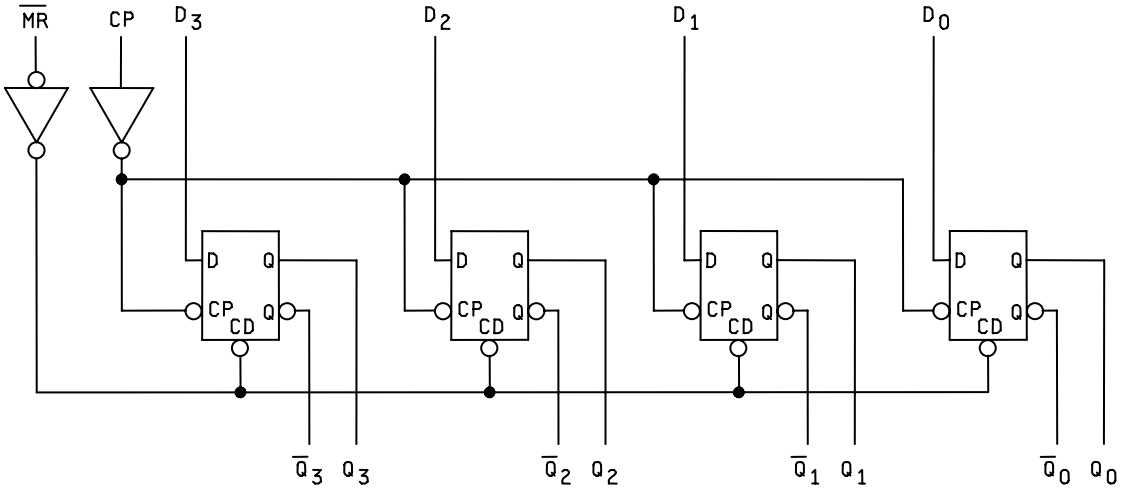

Figure 1. Logic diagrams - Continued.

Terminal number	Terminal name									
	Device type 01		Device type 02		Device type 03		Device type 04	Device type 05		Device type 06
	Cases A,B,C,D	Cases X and 2	Cases E and F	Cases X and 2	Cases A,B,C,D	Cases X and 2	Cases A,B,C,D	Cases E and F	Cases X and 2	Cases E and F
1	CLR 1	NC	CLK 1	NC	CLK 1	NC	CLR	CLR	NC	CLR
2	D1	CLR 1	K1	CLK 1	K1	CLK 1	K1	Q1	CLR	Q1
3	CLK 1	D1	J1	K1	J1	K1	J1	D1	Q1	$\overline{Q}1$
4	PRE 1	CLK 1	PRE 1	J1	PRE 1	J1	PRE 1	D2	D1	D1
5	Q1	NC	Q1	PRE 1	Q1	NC	Q1	Q2	D2	D2
6	$\overline{Q}1$	PRE 1	$\overline{Q}1$	NC	$\overline{Q}1$	PRE 1	$\overline{Q}1$	D3	NC	$\overline{Q}2$
7	GND	NC	$\overline{Q}2$	Q1	GND	NC	GND	Q3	Q2	Q2
8	$\overline{Q}2$	Q1	GND	$\overline{Q}1$	$\overline{Q}2$	Q1	$\overline{Q}2$	GND	D3	GND
9	Q2	$\overline{Q}1$	Q2	$\overline{Q}2$	Q2	$\overline{Q}1$	Q2	CLK	Q3	CLK
10	PRE 2	GND	PRE 2	GND	PRE 2	GND	PRE 2	Q4	GND	Q3
11	CLK 2	NC	J2	NC	J2	NC	J2	D4	NC	$\overline{Q}3$
12	D2	$\overline{Q}2$	K2	Q2	K2	$\overline{Q}2$	K2	Q5	CLK	D3
13	CLR 2	Q2	CLK 2	PRE 2	CLK 2	Q2	CLK	D5	Q4	D4
14	V_{CC}	PRE 2	CLR 2	J2	V_{CC}	PRE 2	V_{CC}	D6	D4	$\overline{Q}4$
15		NC	CLR 1	K2		NC		Q6	Q5	Q4
16		CLK 2	V_{CC}	NC		J2		V_{CC}	NC	V_{CC}
17		NC		CLK 2		NC			D5	
18		D2		CLR 2		K2			D6	
19		CLR 2		CLR 1		CLK 2			Q6	
20		V_{CC}		V_{CC}		V_{CC}			V_{CC}	

FIGURE 2. Terminal connections.

Device type 01

Inputs				Outputs	
Preset	Clear	Clock	D	Q	$\overline{Q}$
L	H	X	X	H	L
H	L	X	X	L	H
L	L	X	X	H*	H*
H	H	↑	H	H	L
H	H	↑	L	L	H
H	H	L	X	Q0	$\overline{Q}$0

Device type 02

Inputs					Outputs	
Preset	Clear	Clock	J	K	Q	$\overline{Q}$
L	H	X	X	X	H	L
H	L	X	X	X	L	H
L	L	X	X	X	H*	H*
H	H	↓	L	L	Q0	$\overline{Q}$0
H	H	↓	H	L	H	L
H	H	↓	L	H	L	H
H	H	↓	H	H	Toggle	
H	H	H	X	X	Q0	$\overline{Q}$0

Device type 03

Inputs				Outputs	
Preset	Clock	J	K	Q	$\overline{Q}$
L	X	X	X	H	L
H	↓	L	L	Q0	$\overline{Q}$0
H	↓	H	L	H	L
H	↓	L	H	L	H
H	↓	H	H	Toggle	
H	H	X	X	Q0	$\overline{Q}$0

Device type 04

Inputs					Outputs	
Preset	Clear	Clock	J	K	Q	$\overline{Q}$
L	H	X	X	X	H	L
H	L	X	X	X	L	H
L	L	X	X	X	H*	H*
H	H	↓	L	L	Q0	$\overline{Q}$0
H	H	↓	H	L	H	L
H	H	↓	L	H	L	H
H	H	↓	H	H	Toggle	
H	H	H	X	X	Q0	$\overline{Q}$0

H = High level (steady state).
L = Low level (steady state).
X = Irrelevant.
↑ = Transition from low to high level.
↓ = Transition from high to low level.
Q0 = The level of Q before the indicated input conditions were established.
Toggle: Each output changes to the complement of its previous level on each active transition (pulse) of the clock.
* This configuration is unstable; that is, it will not persist when preset and clear inputs return to their inactive (high) level.

Device types 05 and 06
(each flip-flop)

Inputs			Outputs	
Clear	Clock	D	Q	$\overline{Q}$ †
L	X	X	L	H
H	↑	H	H	L
H	↑	L	L	H
H	L	X	Q0	$\overline{Q}$0

† = device type 06 only.

Figure 3. Truth table.

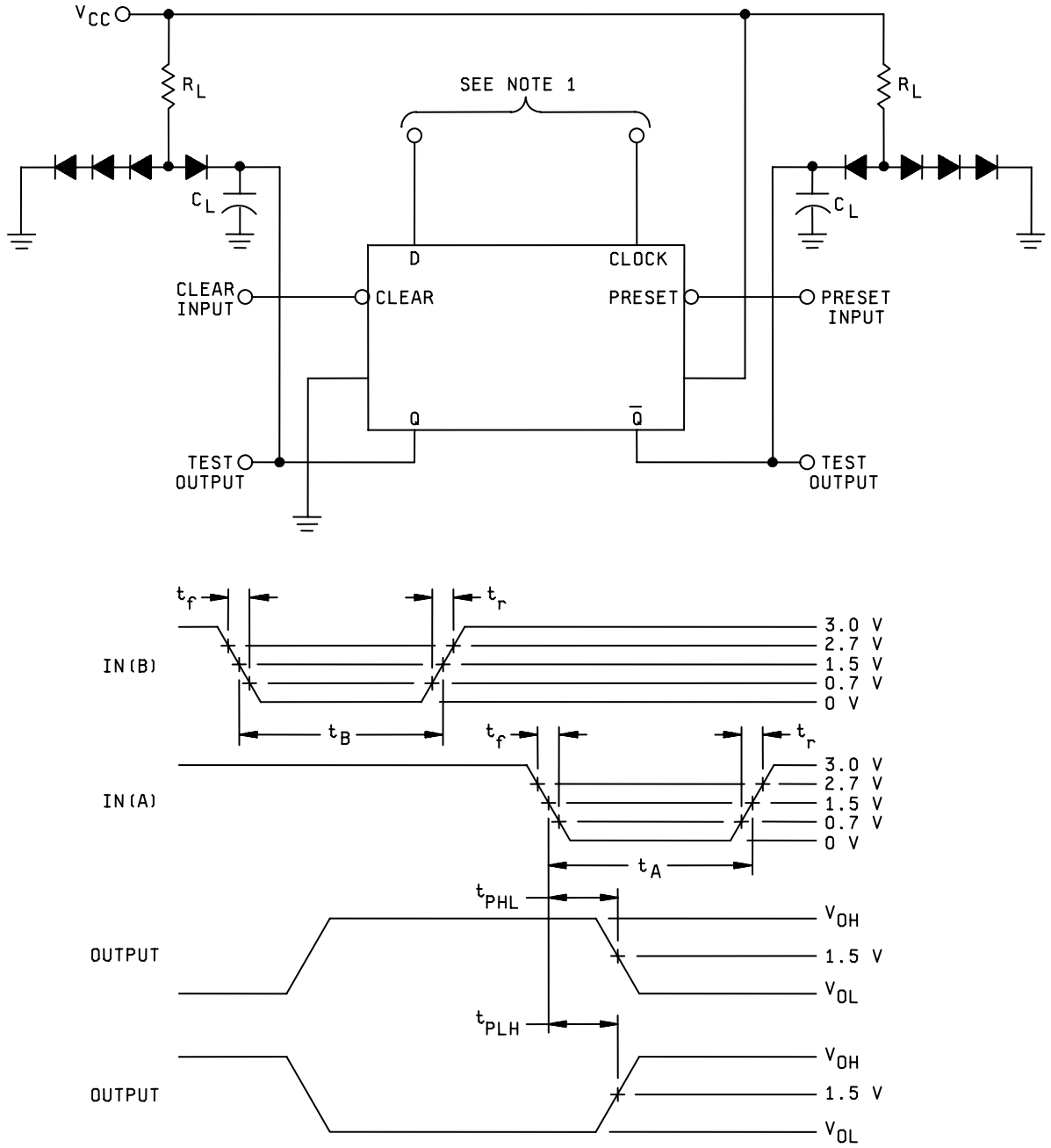

NOTES:

1/ Clear and preset inputs dominate regardless of the state of clock or D inputs.
2/ All diodes are 1N3064 or equivalent.
3/ $t_f = t_r \leq 2.5$ ns, $t_A = 10$ ns ±20%, $t_B = 10$ ns ±20%, PRR ≤ 1 MHz.
4/ $C_L = 50$ pF ±10% including jig and probe capacitance.
5/ $R_L = 280\ \Omega$ ±5%.

FIGURE 4. Clear and preset switching time test circuit and waveforms for device type 01.

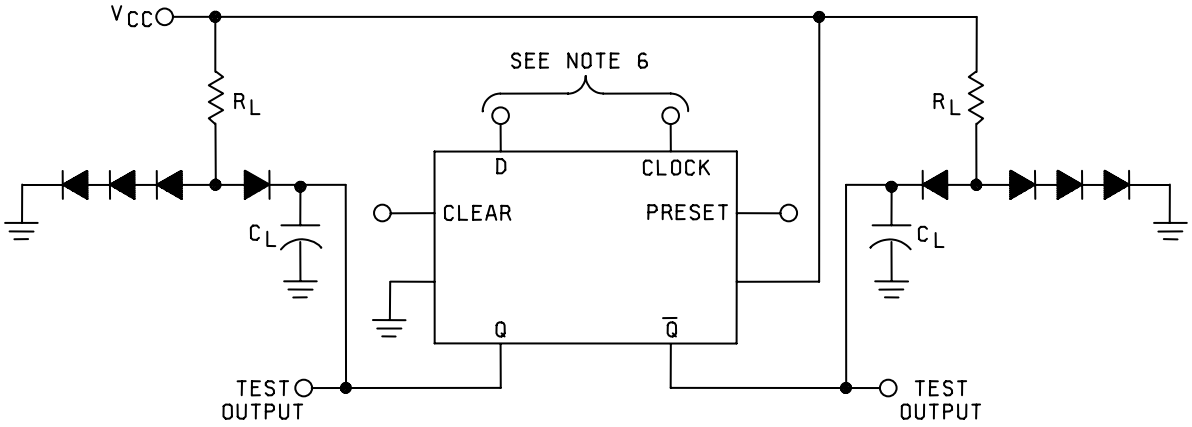

NOTES:

1/ $t_f = t_r \leq 2.5$ ns, $t_{(SETUP)}L = 5$ ns, $t_{(HOLD)}L = 3$ ns, $t_{(SETUP)}H = 5$ ns, $t_{(HOLD)}H = 3$ ns, PRR $\leq$ 1 MHz, $t_D = 10$ ns.

2/ When testing f_{MAX} for subgroup 9, IN(D) PRR = 75 MHz with $t_D = 6$ ns and for subgroups 10 and 11, IN(D) PRR = 55 MHz with $t_D = 8$ ns

3/ $C_L = 50$ pF $\pm$10% including jig and probe capacitance.

4/ $R_L = 280\ \Omega \pm 5\%$.

5/ All diodes are 1N3064 or equivalent.

6/ See table III for input conditions.

7/ Setup and hold time functionality may be verified by separate test from propagation delay tests, by monitoring the output at specified setup hold conditions.

FIGURE 5. Synchronous waveforms and test circuit for device type 01.

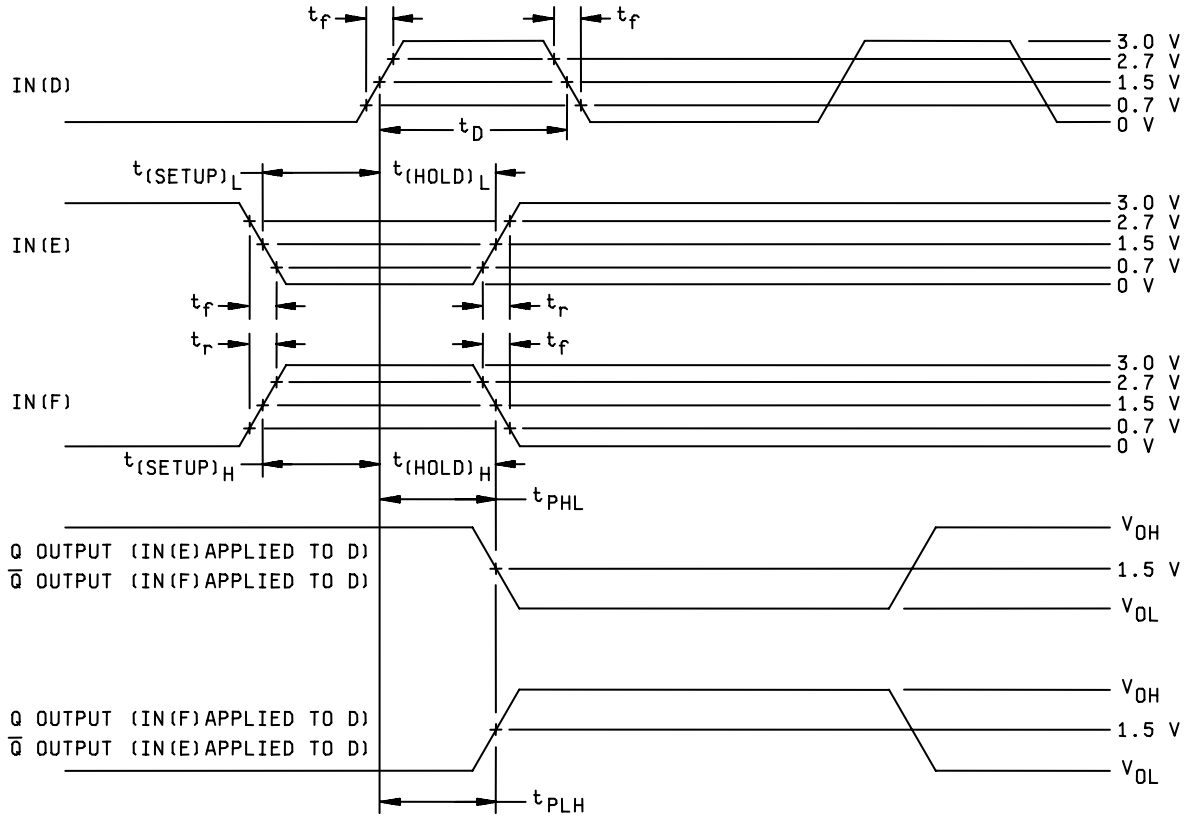

FIGURE 5. Synchronous waveforms and test circuit for device type 01 - Continued.

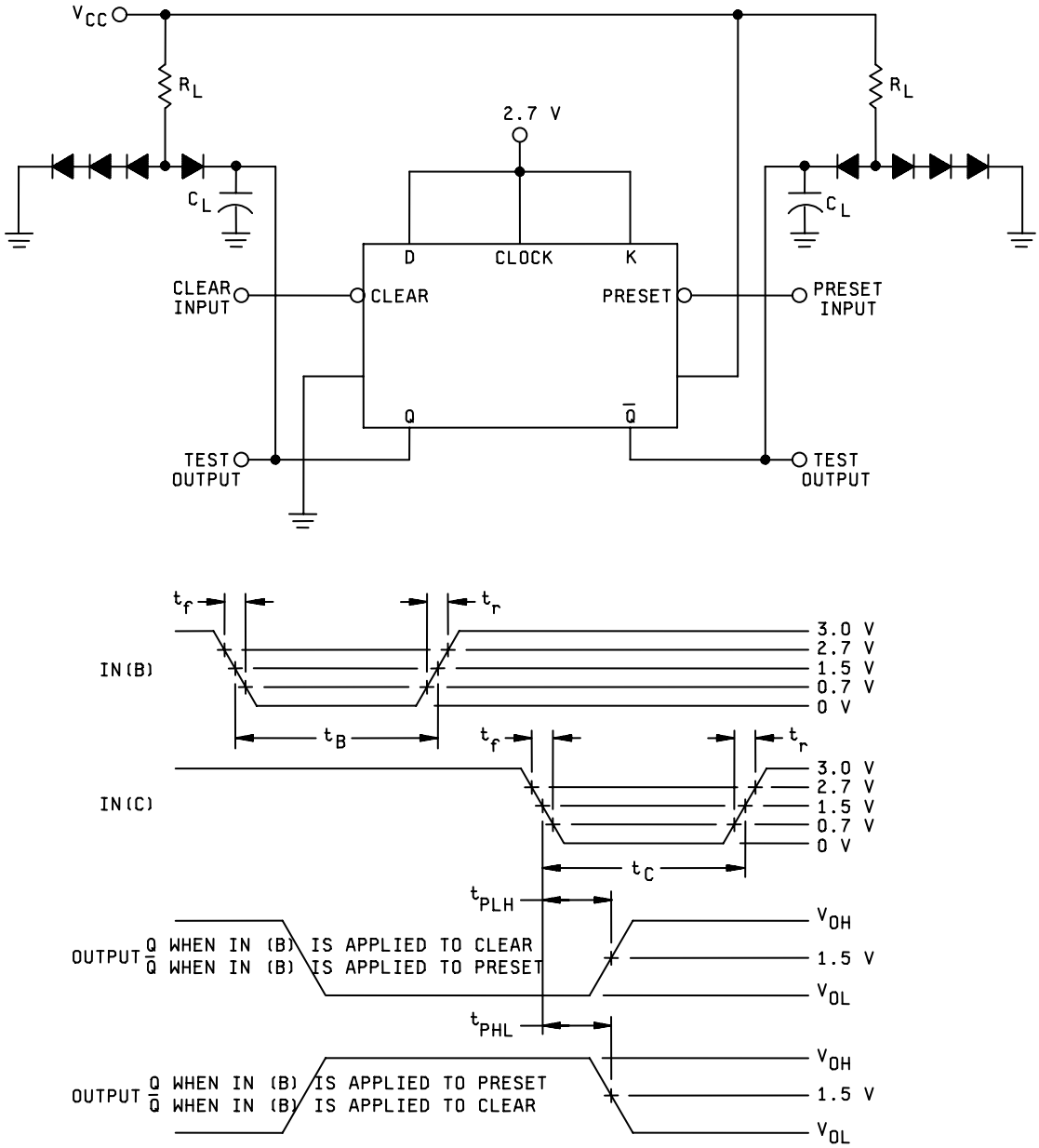

NOTES:

1/ IN(B) and IN(C) have the following characteristics: $t_B = t_C = 10$ ns, $t_f = t_r \leq 2.5$ ns, PRR $\leq$ 1 MHz.
2/ Clear and preset dominate regardless of the state of the J, K, and clock inputs.
3/ $R_L = 280\ \Omega \pm 5\%$.
4/ $C_L = 50$ pF $\pm 10\%$ including jig and probe capacitance.
5/ All diodes are 1N3064 or equivalent.

FIGURE 6. Clear and preset switching time test circuit and waveforms for device types 02 and 04.

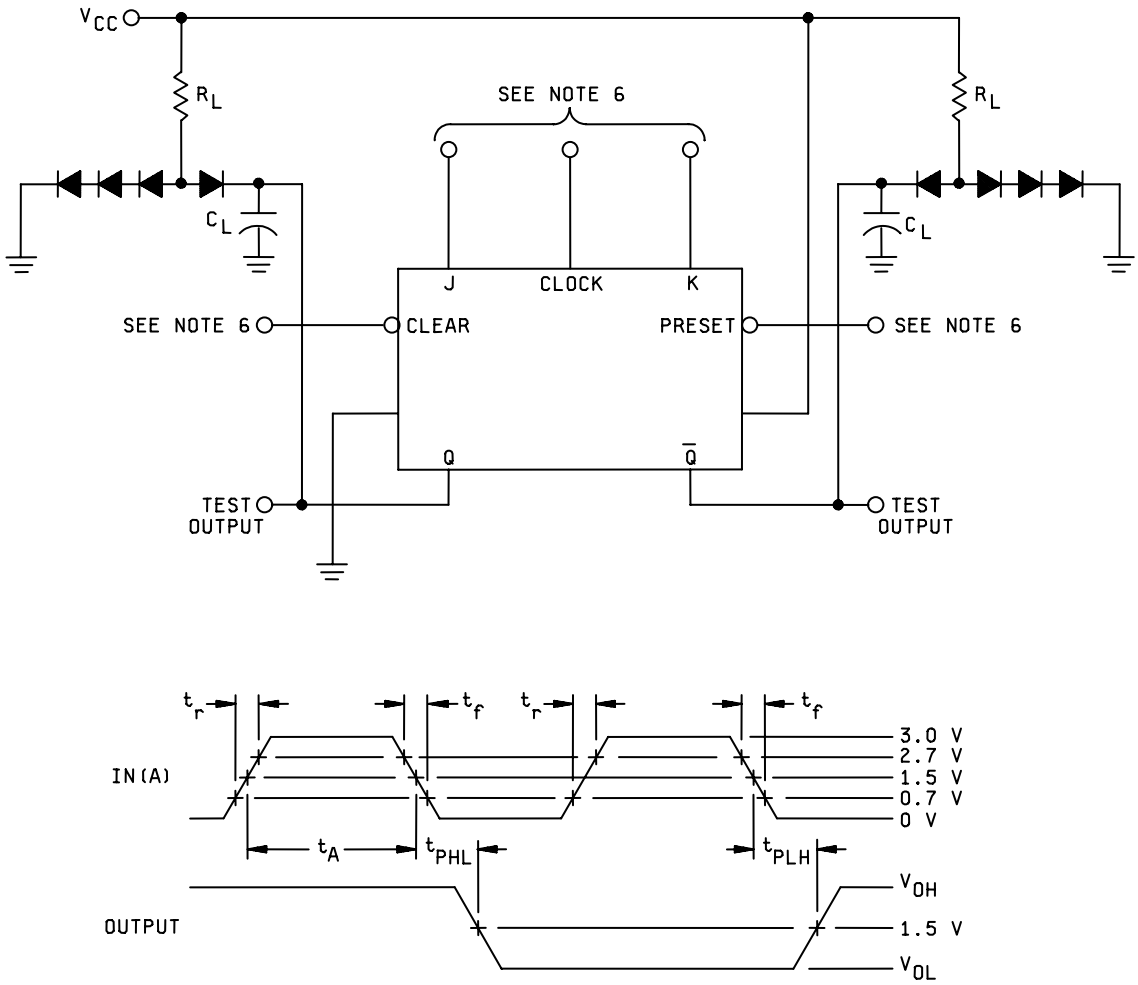

NOTES:

1/ $t_f = t_r \leq 2.5$ ns, when testing f_{MAX} IN(A) PRR = 80 MHz, 50% dc for subgroup 9, PRR = 60 MHz, 50% dc for subgroups 10 and 11

2/ $t_A = 10$ ns, PRR $\leq$ 1 MHz.

3/ $C_L = 50$ pF $\pm$10% including jig and probe capacitance.

4/ $R_L = 280\ \Omega \pm 5\%$.

5/ All diodes are 1N3064 or equivalent.

6/ See table III for input conditions.

FIGURE 7. Synchronous switching waveforms and test circuit for device types 02 and 04.

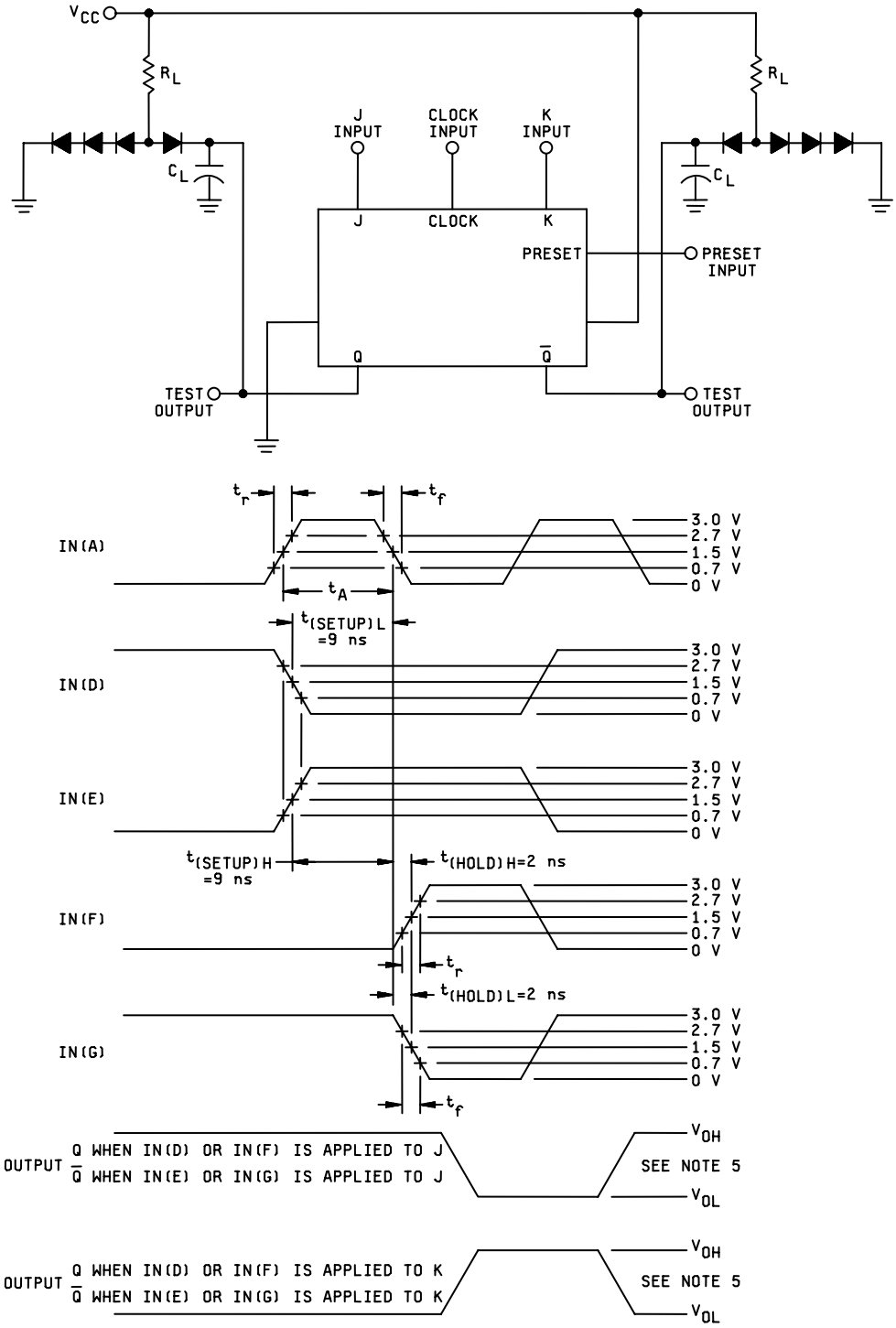

NOTES:

1/ $t_f = t_r \leq 2.5$ ns for all inputs.

2/ IN(A) has the following characteristics: $t_A = 10$ ns, PRR $\leq$ 1 MHz.

3/ $R_L = 280\ \Omega \pm 5\%$, $C_L = 50$ pF $\pm 10\%$ including jig and probe capacitance.

4/ All diodes are 1N3064 or equivalent.

5/ Monitor output to verify functionality with $t_{(SETUP)}$, $t_{(HOLD)}$ limit conditions as shown above.

FIGURE 8. Test circuits and waveforms for device types 02 and 04.

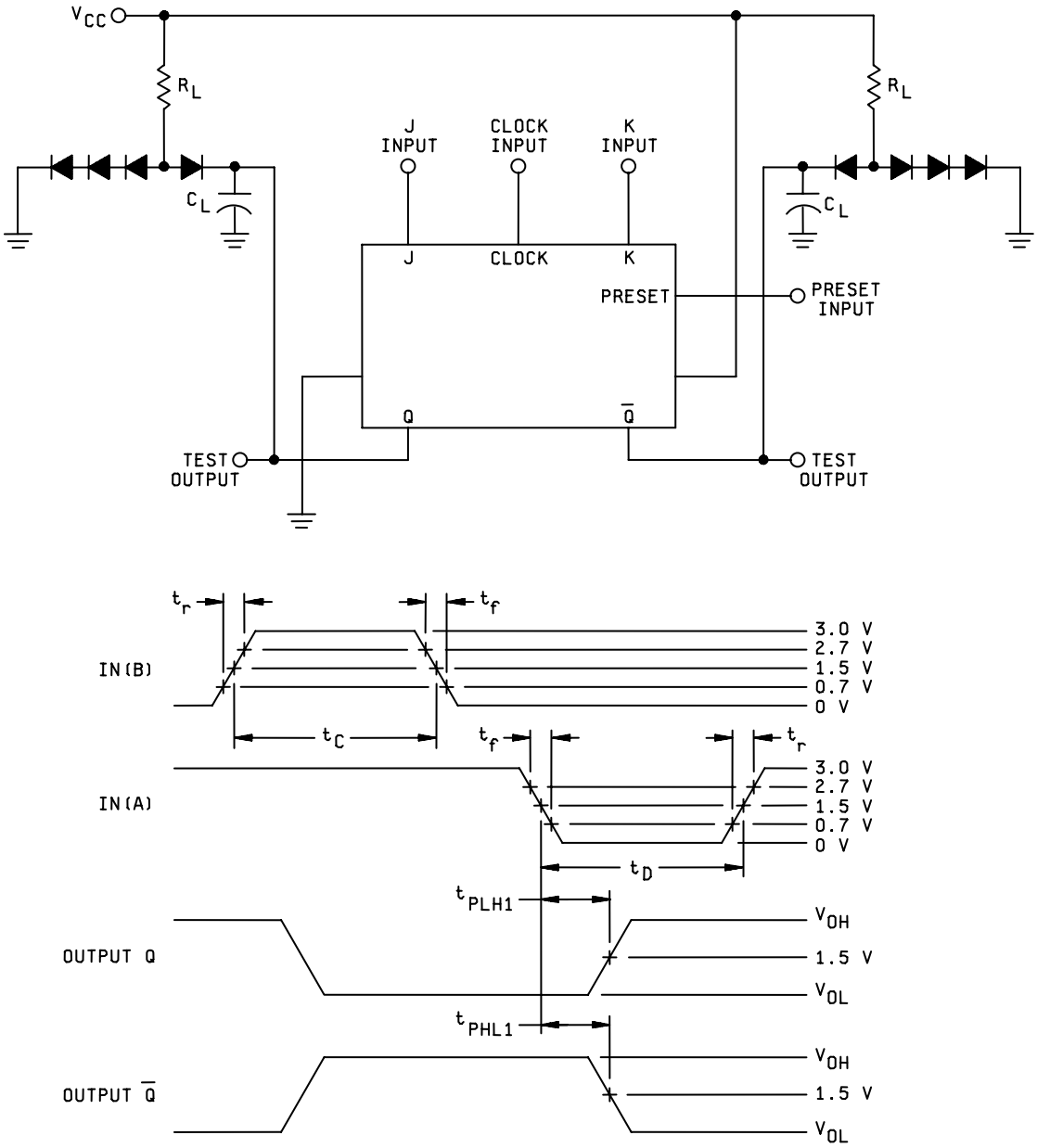

NOTES:

1/ IN(C) has the following characteristics: t_C = 10 ns, $t_f = t_r \leq 2.5$ ns, PRR $\leq$ 1 MHz.

2/ IN(D) has the following characteristics: t_D = 10 ns, $t_f = t_r \leq 2.5$ ns, PRR $\leq$ 1 MHz.

3/ R_L = 280 Ω ±5%.

4/ C_L = 50 pF ±10% including jig and probe capacitance.

5/ All diodes are 1N3064 or equivalent.

FIGURE 9. Preset switching test circuit and waveforms for device type 03.

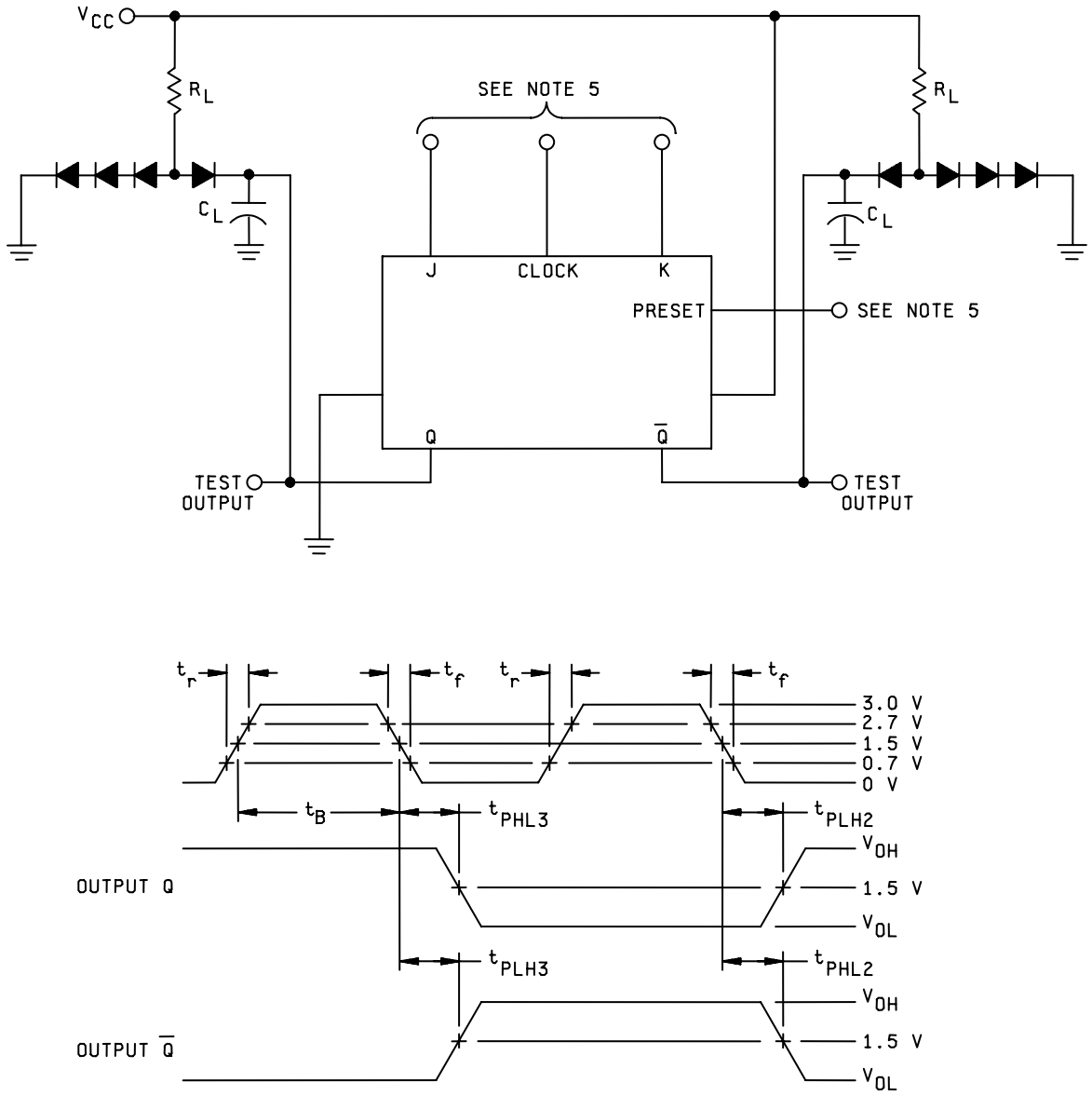

NOTES:

1/ IN(B) has the following characteristics: t_B = 10 ns, $t_f = t_r \leq 2.5$ ns, PRR $\leq$ 1 MHz (when testing f_{MAX} PRR = 80 MHz, 50% duty cycle for subgroup 9, PRR = 60 MHz, 50% duty cycle for subgroups 10 and 11).

2/ C_L = 50 pF ±10% including jig and probe capacitance.

3/ R_L = 280 Ω ±5%.

4/ All diodes are 1N3064 or equivalent.

5/ See table III for input conditions.

FIGURE 10. Synchronous switching waveforms and test circuit for device type 03.

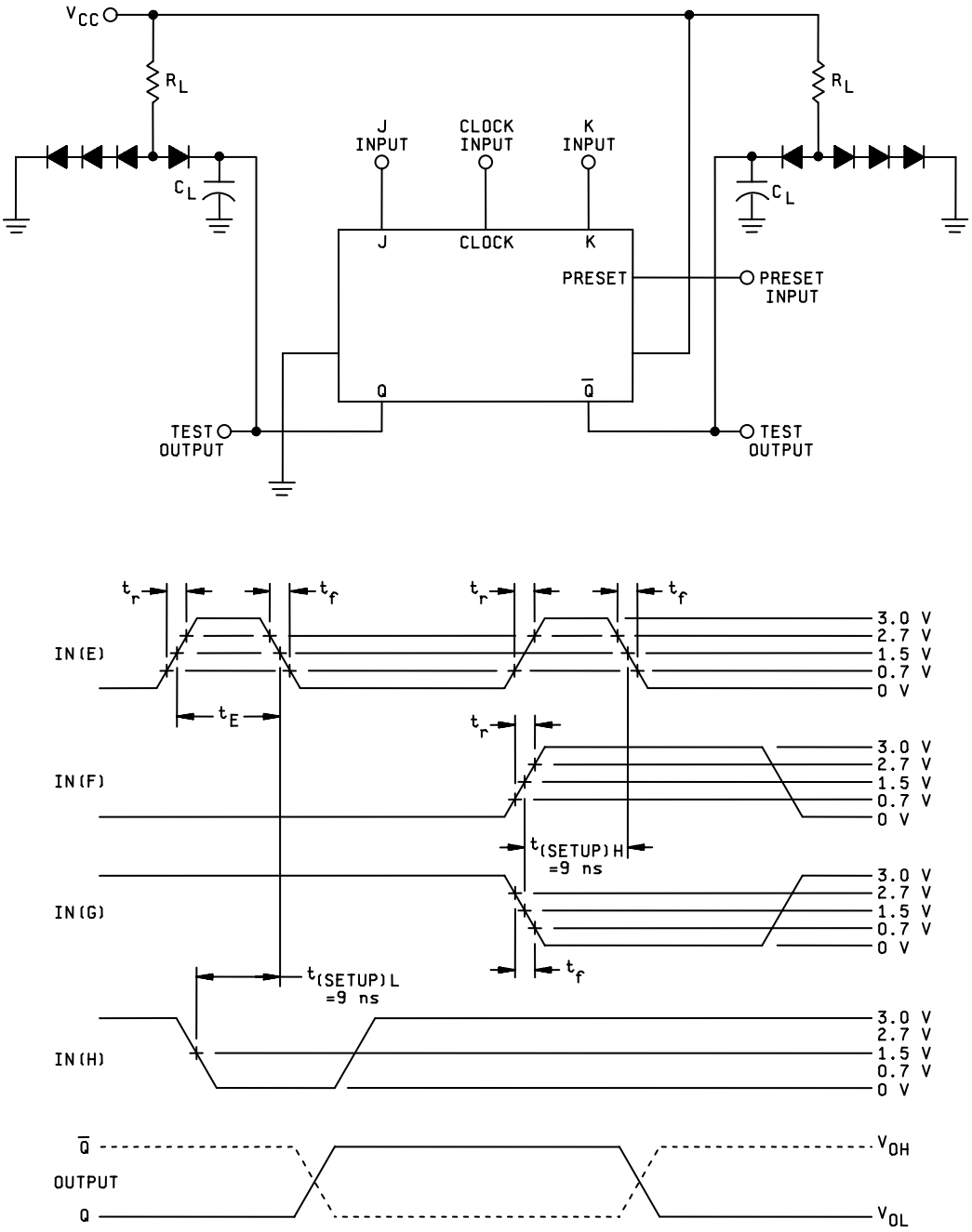

NOTES:

1/ IN(E) has the following characteristics: t_E = 10 ns, $t_f = t_r \leq 2.5$ ns, PRR ≤ 1 MHz.

2/ $t_f = t_r < 2.5$ ns for IN(F), IN(G), and IN(H).

3/ R_L = 280 Ω ±5%.

4/ C_L = 50 pF ±10% including jig and probe capacitance.

5/ All diodes are 1N3064 or equivalent.

6/ Monitor output to verify functionality with $t_{(SETUP)}$ limit conditions.

FIGURE 11. $t_{(SETUP)}$ waveforms and test circuit for device type 03.

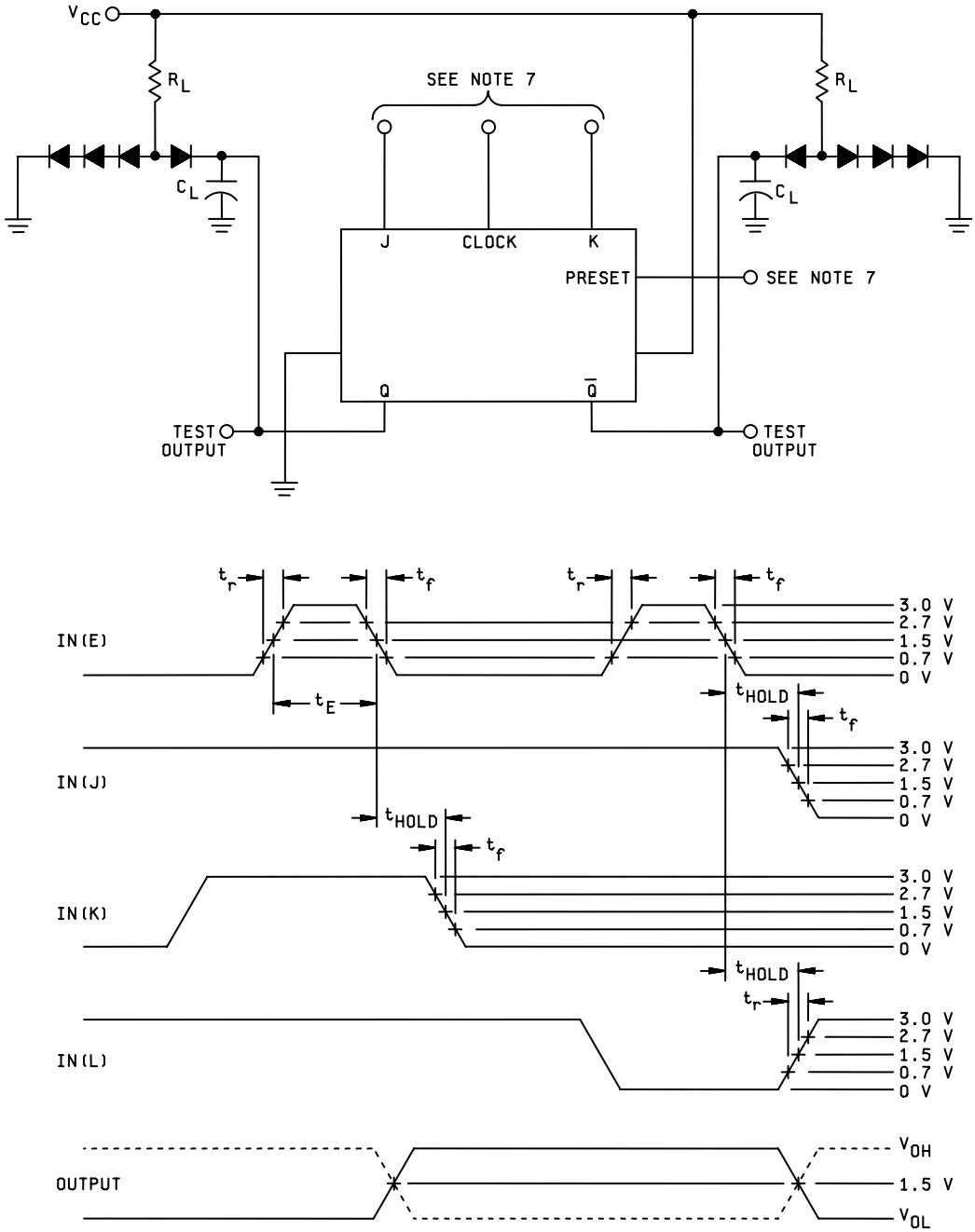

NOTES:

1/ All inputs: $t_f = t_r \leq 2.5$ ns.

2/ IN(E) has the following characteristics: $t_E = 10$ ns, PRR $\leq$ 1 MHz.

3/ $R_L = 280\ \Omega \pm 5\%$.

4/ $C_L = 50$ pF $\pm 10\%$ including jig and probe capacitance.

5/ All diodes are 1N3064 or equivalent.

6/ $t_{(HOLD)}$ H = 2ns, $t_{(HOLD)}$ L = 2ns.

7/ See table III for input conditions.

8/ Monitor output to verify functionality with $t_{(SETUP)}$ limit conditions.

FIGURE 12. $t_{(HOLD)}$ waveforms and test circuit for device type 03.

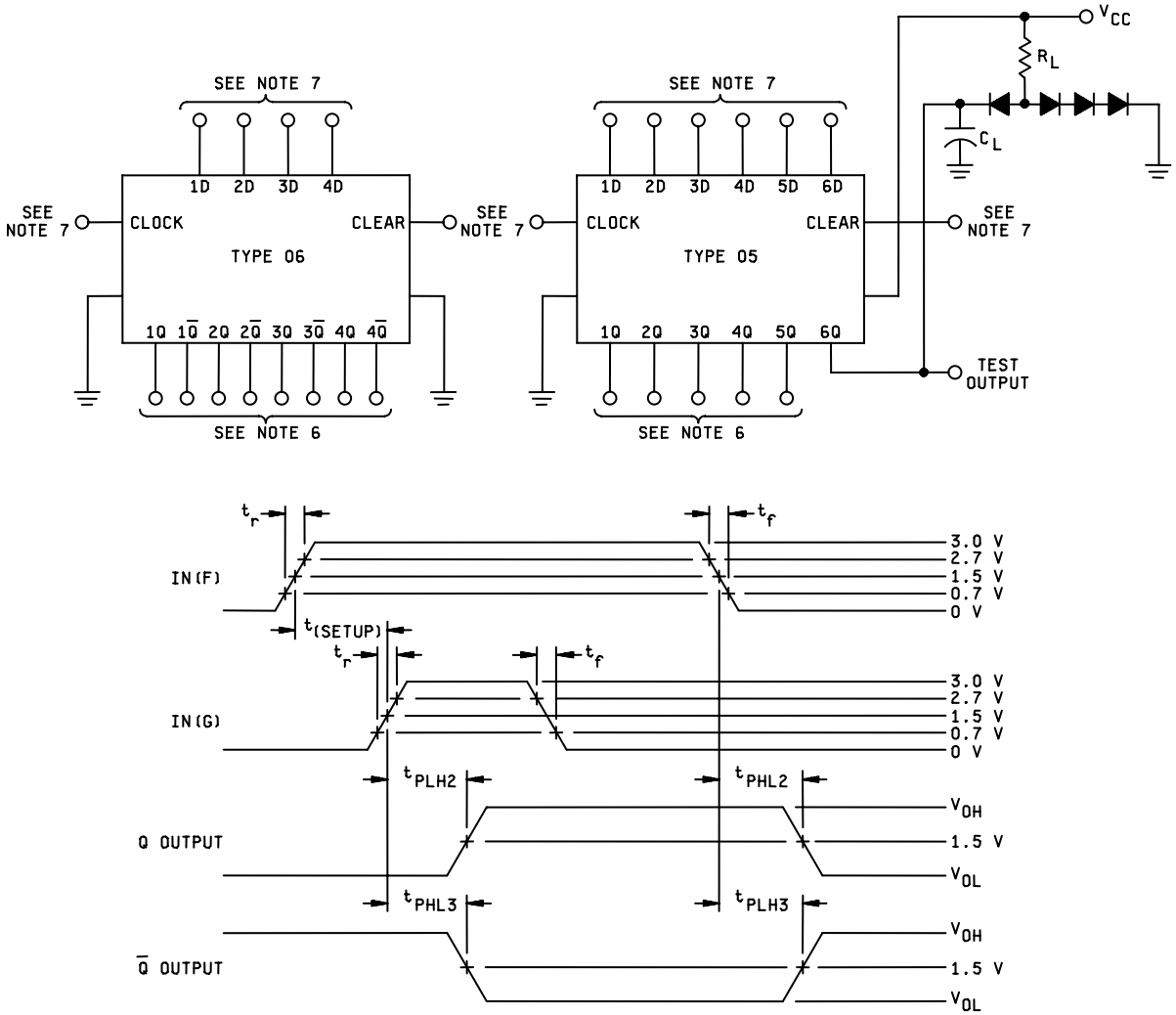

NOTES:

1/ $t_f = t_r \leq 2.5$ ns; IN(F) PRR $\leq$ 1 MHz.
2/ $t_{(SETUP)} = 7$ ns.
3/ $C_L = 50$ pF $\pm$10% including jig and probe capacitance.
4/ $R_L = 280\ \Omega \pm 5\%$.
5/ All diodes are 1N3064 or equivalent.
6/ All load circuits are as shown for 6Q.
7/ See table III for input conditions.

FIGURE 13. Clear waveforms and test circuit for device types 05 and 06.

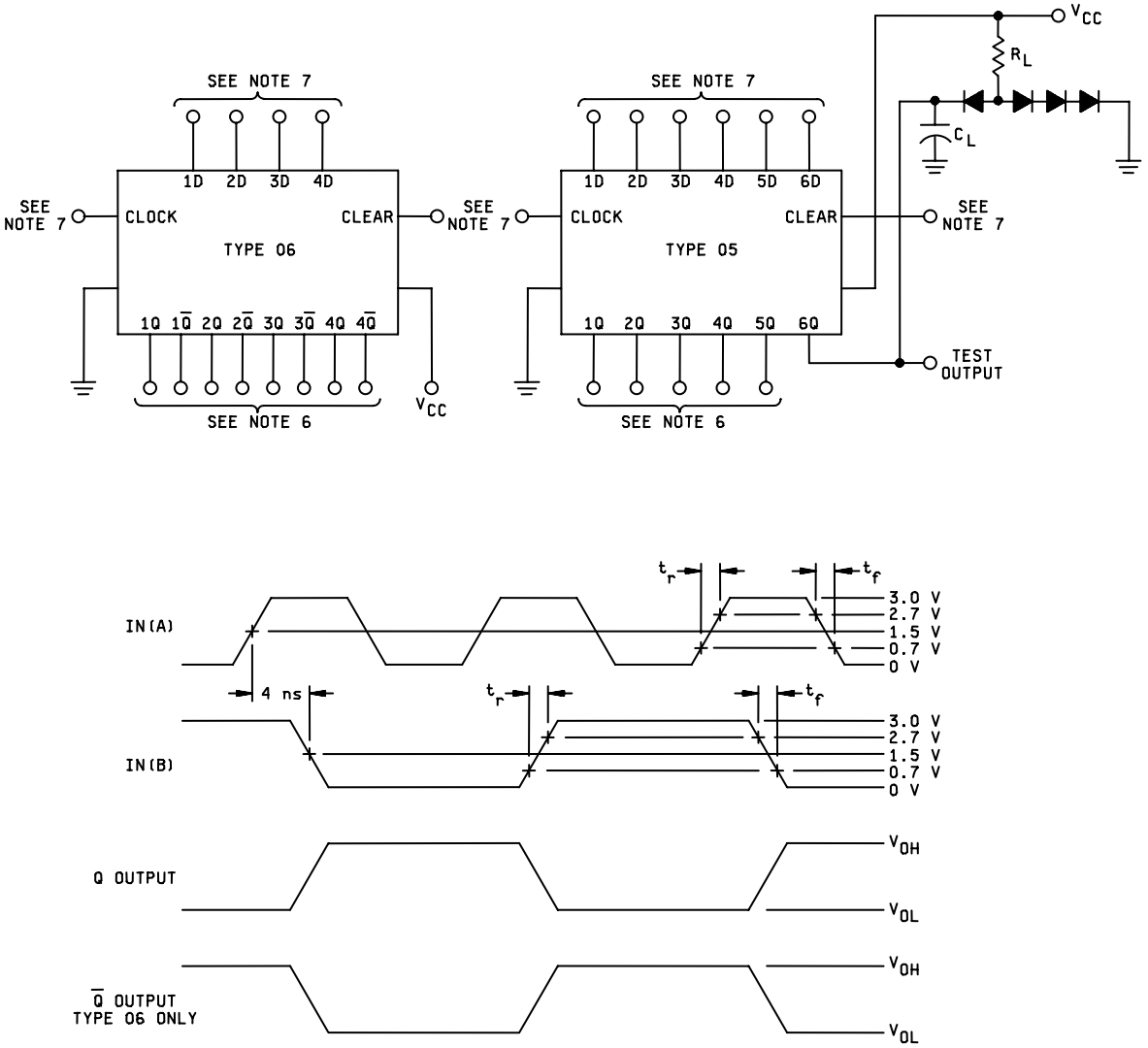

NOTES:

1/ $t_f = t_r \leq 2.5$ ns; IN(A) and IN(B)
2/ IN(A) PRR = 75 MHz 50% dc, IN(B) PRR = 37.5 MHz 50% dc, for subgroup 9;
IN(A) PRR = 55 MHz 50% dc, IN(B) PRR = 27.5 MHz 50% dc, for subgroups 10 and 11.
3/ C_L = 50 pF ±10% including jig and probe capacitance.
4/ R_L = 280 Ω ±5%.
5/ All diodes are 1N3064 or equivalent.
6/ All load circuits are as shown for 6Q.
7/ See table III for input conditions.

FIGURE 14. f_{MAX} waveforms and test circuit for device types 05 and 06.

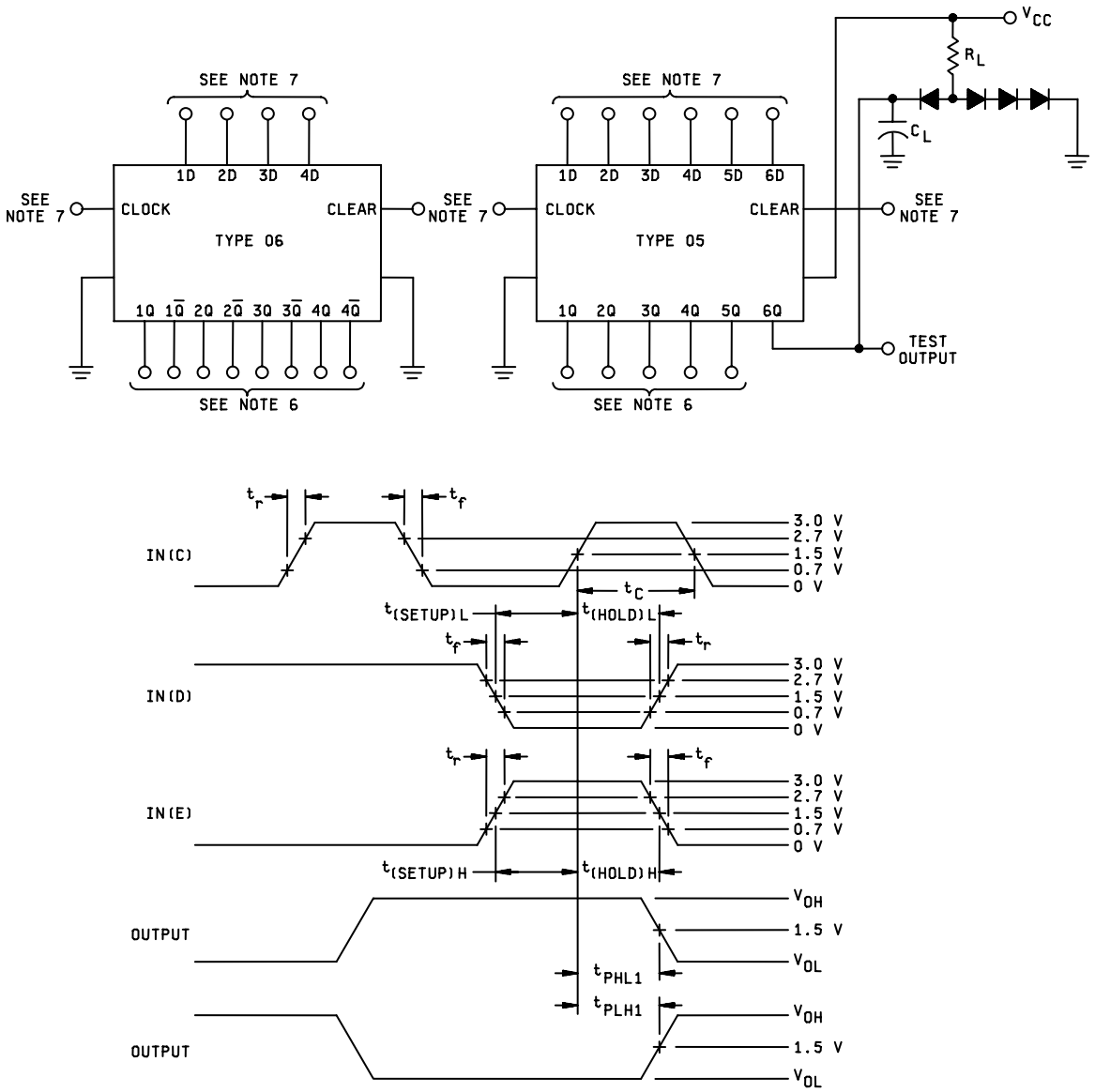

NOTES:

1/ $t_f = t_r \leq 2.5$ ns; IN(C) PRR $\leq$ 1 MHz, t_C = 10 ns.

2/ $t_{(SETUP)}L$ = 7 ns, $t_{(HOLD)}L$ = 5 ns, $t_{(SETUP)}H$ = 7 ns, $t_{(HOLD)}H$ = 5 ns.

3/ C_L = 50 pF ±10% including jig and probe capacitance.

4/ R_L = 280 Ω ±5%.

5/ All diodes are 1N3064 or equivalent.

6/ All load circuits are as shown for 6Q.

7/ See table III for input conditions.

8/ Setup and hold time functionally may be verified by separate tests from propagation delay tests by monitoring the output at specified setup and hold conditions.

FIGURE 15. Synchronous switching waveforms and test circuit for device types 05 and 06.

TABLE III. Group A inspection for device type 01.
Terminal conditions (pins not designated may be high ≥ 2.0 V, low ≤ 0.8 V, or open).

Subgroup	Symbol	MIL-STD-883 method	Cases X, 2 1/	2	3	4	6	8	9	10	12	13	14	16	18	19	20	Measured terminal	Test limits		Unit
			Cases A, B,C,D	1	2	3	4	5	6	7	8	9	10	11	12	13	14		Min	Max	
			Test no.	CLR 1	D1	CLK 1	PRE 1	Q1	$\overline{Q}1$	GND	$\overline{Q}2$	Q2	PRE 2	CLK 2	D2	CLR 2	V_{CC}				
1	V_{OH}	3006	1	2.0 V	5.5 V	C 2/	0.8 V	-1 mA		GND							4.5 V	Q1	2.5		V
T_C = +25°C		"	2	0.8 V	5.5 V	C	2.0 V		-1 mA	"							"	$\overline{Q}1$	"		"
		"	3							"		-1 mA	0.8 V	C	5.5 V	2.0 V	"	Q2	"		"
		"	4							"	-1 mA		2.0 V	C	5.5 V	0.8 V	"	$\overline{Q}2$	"		"
		"	5	5.5 V	2.0 V	C	5.5 V	-1 mA		"							"	Q1	"		"
		"	6	5.5 V	0.8 V	C	5.5 V		-1 mA	"							"	$\overline{Q}1$	"		"
		"	7							"		-1 mA	5.5 V	C	2.0 V	5.5 V	"	Q2	"		"
		"	8							"	-1 mA		5.5 V	C	0.8 V	5.5 V	"	$\overline{Q}2$	"		"
	V_{OL}	3007	9	2.0 V	5.5 V	C	0.8 V		20 mA	"							"	$\overline{Q}1$			"
		"	10	0.8 V	5.5 V	C	2.0 V	20 mA		"							"	Q1		"	"
		"	11							"	20 mA		0.8 V	C	5.5 V	2.0 V	"	$\overline{Q}2$	0.5		"
		"	12							"		20 mA	2.0 V	C	5.5 V	0.8 V	"	Q2		"	"
		"	13	5.5 V	2.0 V	C	5.5 V		20 mA	"							"	$\overline{Q}1$	"		"
		"	14	5.5 V	0.8 V	C	5.5 V	20 mA		"							"	Q1		"	"
		"	15							"	20 mA		5.5 V	C	2.0 V	5.5 V	"	$\overline{Q}2$	"		"
		"	16							"		20 mA	5.5 V	C	0.8 V	5.5 V	"	Q2		"	"
	V_{IC}		17	-18 mA						"							"	CLR 1	"	-1.2	"
			18		-18 mA					"							"	D1		"	"
			19			-18 mA				"							"	CLK 1		"	"
			20				-18 mA			"							"	PRE 1		"	"
			21							"			-18 mA				"	PRE 2		"	"
			22							"				-18 mA			"	CLK 2		"	"
			23							"					-18 mA		"	D2		"	"
			24							"						-18 mA	"	CLR 2		"	"
	I_{IL1}	3009	25	5.5 V	0.5 V	GND				"							5.5 V	D1	-0.5	-2	mA
		"	26							"				GND	0.5 V	5.5 V	"	D2	-0.5	-2	"
	I_{IL2}	"	27	0.5 V		5.5 V	GND			"							"	CLR 1	-1.5	-6	"
		"	28							"			GND	5.5 V		0.5 V	"	CLR 2	-1.5	-6	"
	I_{IL3}	"	29	GND	GND		0.5 V			"							"	PRE 1	-1	-4	"
		"	30							"			0.5 V		GND	GND	"	PRE 2	-1	-4	"
	I_{IL4}	"	31	5.5 V	GND	0.5 V	GND			"							"	CLK 1	-1	-4	"
		"	32							"			GND	0.5 V	GND	5.5 V	"	CLK 2	-1	-4	"

See footnotes at end of device type 01.

TABLE III. Group A inspection for device type 01 - Continued.
Terminal conditions (pins not designated may be high ≥ 2.0 V, low ≤ 0.8 V, or open).

Subgroup	Symbol	MIL-STD-883 method	Cases X, 2 1/	2	3	4	6	8	9	10	12	13	14	16	18	19	20	Measured terminal	Test limits		Unit
			Cases A, B, C, D	1	2	3	4	5	6	7	8	9	10	11	12	13	14		Min	Max	
			Test no.	CLR 1	D1	CLK 1	PRE 1	Q1	$\overline{Q}1$	GND	$\overline{Q}2$	Q2	PRE 2	CLK 2	D2	CLR 2	V_{CC}				
1	I_{IH1}	3010	33	GND	2.7 V	5.5 V				GND							5.5 V	D1		50	µA
T_C = +25°C		"	34							"				5.5 V	2.7 V	GND	"	D2		50	µA
	I_{IH5}	"	35	GND	5.5 V	5.5 V				"							"	D1		1	mA
		"	36							"				5.5 V	5.5 V	GND	"	D2		1	mA
	I_{IH2}	"	37	2.7 V	GND	GND	5.5 V			"							"	CLR 1		150	µA
		"	38							"			5.5 V	GND	GND	2.7 V	"	CLR 2		150	µA
	I_{IH5}	"	39	5.5 V	GND	GND	5.5 V			"							"	CLR 1		1	mA
		"	40							"			5.5 V	GND	GND	5.5 V	"	CLR 2		1	mA
	I_{IH3}	"	41	5.5 V	5.5 V	C	2.7 V			"							"	PRE 1		100	µA
		"	42							"			2.7 V	C	5.5 V	5.5 V	"	PRE 2		100	µA
	I_{IH5}	"	43	5.5 V	5.5 V	C	5.5 V			"							"	PRE 1		1	mA
		"	44							"			5.5 V	C	5.5 V	5.5 V	"	PRE 2		1	mA
	I_{IH4}	"	45	5.5 V	5.5 V	2.7 V	GND			"							"	CLK 1		100	µA
		"	46							"			GND	2.7 V	5.5 V	5.5 V	"	CLK 2		100	µA
	I_{IH5}	"	47	5.5 V	5.5 V	5.5 V	GND			"							"	CLK 1		1	mA
		"	48							"			GND	5.5 V	5.5 V	5.5 V	"	CLK 2		1	mA
	I_{OS}	3011	49	GND			5.5 V		GND	"								$\overline{Q}1$	-40	-100	mA
		"	50	5.5 V			GND	GND		"							"	Q1	"	3/	"
		"	51							"	GND		5.5 V			GND	"	$\overline{Q}2$	"	"	"
		"	52							"		GND	GND			5.5 V	"	Q2	"	"	"
	I_{CC}	3005	53	5.5 V		GND	GND			"			GND	GND		5.5 V	"	V_{CC}		50	"
		3005	54	GND		GND	5.5 V			"			5.5 V	GND		GND	"	V_{CC}			"
	I_{CEX}		55	5.5 V	5.5 V	C	GND	5.5 V		"							"	Q1		250	µA
			56	GND	5.5 V	C	5.5 V		5.5 V	"							"	$\overline{Q}1$	50		"
			57							"		5.5 V	GND	C	5.5 V	5.5 V	"	Q2			"
			58							"	5.5 V		5.5 V	C	5.5 V	GND	"	$\overline{Q}2$	"		"
2	Same tests, terminal conditions, and limits as for subgroup 1, except T_C = +125°C and V_{IC} tests are omitted. V_{OL} (max) = 0.45 V, V_{IL} = 0.7 V.																		"		
																			"		
3	Same tests, terminal conditions, and limits as for subgroup 1, except T_C = -55°C and V_{IC} tests are omitted.																				

See footnotes at end of device type 01.

TABLE III. Group A inspection for device type 01 - Continued.
Terminal conditions (pins not designated may be high ≥ 2.0 V, low ≤ 0.8 V, or open).

Subgroup	Symbol	MIL-STD-883 method	Cases X, 2 1/	2	3	4	6	8	9	10	12	13	14	16	18	19	20	Measured terminal	Test limits		Unit
			Cases A, B,C,D	1	2	3	4	5	6	7	8	9	10	11	12	13	14		Min	Max	
			Test no.	CLR 1	D1	CLK 1	PRE 1	Q1	$\overline{Q}1$	GND	$\overline{Q}2$	Q2	PRE 2	CLK 2	D2	CLR 2	V_{CC}				
7 4/ 5/			59	B	B	B	B	H	H	GND	H	H	B	B	B	B	4.5 V	All	H or L as		V
T_C = +25°C			60	B	"	"	A	L	"	"	"	L	A	"	"	B	"	outputs	shown 6/		"
			61	A	"	"	A	L	"	"	"	L	A	"	"	A	"	"	"		"
			62	"	"	"	B	H	L	"	L	H	B	"	"	"	"	"	"		"
			63	"	"	A	"	"	L	"	L	"	"	A	"	"	"	"	"		"
			64	B	"	"	"	"	H	"	H	"	"	"	"	B	"	"	"		"
			65	"	A	"	"	"	"	"	"	"	"	"	A	"	"	"	"		"
			66	"	"	"	A	L	"	"	"	L	A	"	"	"	"	"	"		"
			67	A	"	"	A	L	"	"	"	L	A	"	"	A	"	"	"		"
			68	"	"	"	B	H	L	"	L	H	B	"	"	"	"	"	"		"
			69	"	"	"	A	"	"	"	"	"	A	"	"	"	"	"	"		"
			70	"	"	B	"	"	"	"	"	"	"	B	"	"	"	"	"		"
			71	"	B	B	"	"	"	"	"	"	"	B	B	"	"	"	"		"
			72	"	"	A	"	L	H	"	H	L	"	A	"	"	"	"	"		"
			73	"	"	"	B	H	L	"	L	H	B	"	"	"	"	"	"		"
			74	B	A	"	B	H	H	"	H	H	B	"	A	B	"	"	"		"
			75	B	B	A	B	H	"	"	"	H	B	A	B	B	"	"	"		"
			76	B	"	"	A	L	"	"	"	L	A	"	"	B	"	"	"		"
			77	A	"	"	"	"	"	"	"	"	"	"	"	A	"	"	"		"
			78	"	A	B	"	"	"	"	"	"	"	B	A	"	"	"	"		"
			79	"	"	A	"	H	L	"	L	H	"	A	"	"	"	"	"		"
			80	"	"	"	B	"	"	"	"	"	B	"	"	"	"	"	"		"
			81	"	"	"	A	"	"	"	"	"	A	"	"	"	"	"	"		"
			82	B	"	"	"	L	H	"	H	L	"	"	"	B	"	"	"		"
			83	A	"	"	"	L	H	"	H	L	"	"	"	A	"	"	"		"
			84	"	B	"	B	H	L	"	L	H	B	"	B	"	"	"	"		"
			85	"	B	"	A	H	L	"	L	H	A	"	B	"	"	"	"		"
8 4/ 5/	Same tests, terminal conditions, and limits as for subgroup 7, except T_C = +125°C and -55°C.																				

See footnotes at end of device type 01.

TABLE III. Group A inspection for device type 01 - Continued.
Terminal conditions (pins not designated may be high ≥ 2.0 V, low ≤ 0.8 V, or open).

Subgroup	Symbol	MIL-STD-883 method	Cases X, 2 1/	2	3	4	6	8	9	10	12	13	14	16	18	19	20	Measured terminal	Test limits		Unit
			Cases A, B,C,D	1	2	3	4	5	6	7	8	9	10	11	12	13	14		Min	Max	
			Test no.	CLR 1	D1	CLK 1	PRE 1	Q1	$\overline{Q}1$	GND	$\overline{Q}2$	Q2	PRE 2	CLK 2	D2	CLR 2	V_{CC}				
9	f_{MAX}	Fig. 5	86	5.0 V	E	IN (D)	5.0 V	OUT		GND							5.0 V	1Q	75		MHz
T_C = +25°C	7/																				4/
	f_{MAX}	Fig. 5	87							"		OUT	5.0 V	IN (D)	E	5.0 V	"	2Q	75		MHz
	7/																				4/
	t_{PLH1}	Fig. 4	88	IN (A)		GND	IN (B)		OUT	"							"	CLR 1 to $\overline{Q}1$	2.0	8.0	ns
7		"	89	IN (B)		GND	IN (A)	OUT		"							"	PRE 1 to Q1	"	"	"
		"	90							"	OUT		IN (B)	GND		IN (A)	"	CLR 2 to $\overline{Q}2$	"	"	"
		"	91							"		OUT	IN (A)	GND		IN (B)	"	PRE 2 to Q2	"	"	"
	t_{PLH2}	Fig. 5	92							"		OUT	5.0 V	IN (D)	IN (F)	F	"	CLK 2 to Q2	"	13.0	"
		8/	93							"	OUT		F	IN (D)	IN (E)	5.0 V	"	CLK 2 to $\overline{Q}2$	"	"	"
		"	94	F	IN (F)	IN (D)	5.0 V	OUT		"							"	CLK 1 to Q1	"	"	"
		"	95	5.0 V	IN (E)	"	F		OUT	"							"	CLK 1 to $\overline{Q}1$	"	"	"
	t_{PHL2}	"	96	5.0 V	IN (E)	"	F	OUT		"							"	CLK 1 to Q1	"	11.5	"
		"	97	F	IN (F)	"	5.0 V		OUT	"							"	CLK 1 to $\overline{Q}1$	"	"	"
		"	98							"		OUT	F	IN (D)	IN (E)	5.0 V	"	CLK 2 to Q2	"	"	"
		"	99							"	OUT		5.0 V	IN (D)	IN (F)	F	"	CLK 2 to $\overline{Q}2$	"	"	"
	t_{PHL3}	Fig. 4	100							"		OUT	IN (B)	2.7 V		IN (A)	"	CLR 2 to Q2	"	16.0	"
		Fig. 4	101							"	OUT		IN (A)	2.7 V		IN (B)	"	PRE 2 to $\overline{Q}2$	"	16.0	"

See footnotes at end of device type 01.

TABLE III. Group A inspection for device type 01 - Continued.
Terminal conditions (pins not designated may be high ≥ 2.0 V, low ≤ 0.8 V, or open).

Subgroup	Symbol	MIL-STD-883 method	Cases X, 2 1/	2	3	4	6	8	9	10	12	13	14	16	18	19	20	Measured terminal	Test limits		Unit
			Cases A, B,C,D	1	2	3	4	5	6	7	8	9	10	11	12	13	14		Min	Max	
			Test no.	CLR 1	D1	CLK 1	PRE 1	Q1	$\overline{Q}1$	GND	$\overline{Q}2$	Q2	PRE 2	CLK 2	D2	CLR 2	V_{CC}				
9	t_{PHL4}	Fig. 4	102							GND	OUT		IN (A)	GND		IN (B)	5.0 V	PRE 2 to $\overline{Q}2$	2.0	10.0	ns
T_C = +25°C		"	103							"		OUT	IN (B)	GND		IN (A)	"	CLR 2 to Q2	"	10.0	"
	t_{PHL3}	"	104	IN (B)		2.7 V	IN (A)		OUT	"							"	PRE 1 to $\overline{Q}1$	"	16.0	"
		"	105	IN (A)		2.7 V	IN (B)	OUT										CLR 1 to Q1	"	16.0	"
	t_{PHL4}	"	106	IN (A)		GND	IN (B)	OUT	"	"						"	"	CLR 1 to Q1	"	10.0	"
		"	107	IN (B)		GND	IN (A)		OUT	"							"	PRE 1 to $\overline{Q}1$	"	10.0	"
	t_{SETUP} (H)	Fig. 5	108							"		OUT	5.0 V	IN (D)	IN (F)	F	"	Q2	8/		
		"	109	F	IN (F)	IN (D)	5.0 V	OUT										Q1	"		
		"	110	F	IN (F)	IN (D)	5.0 V		OUT	"							"	$\overline{Q}1$	"		
		"	111						"	"	OUT		5.0 V	IN (D)	IN (F)	F	"	$\overline{Q}2$	"		
	t_{SETUP} (L)	"	112							"	OUT		F	IN (D)	IN (E)	5.0 V	"	$\overline{Q}2$	"		
		"	113	5.0 V	IN (E)	IN (D)	F		OUT	"							"	$\overline{Q}1$	"		
		"	114	5.0 V	IN (E)	IN (D)	F	OUT										Q1	"		
		"	115							"		OUT	F	IN (D)	IN (E)	5.0 V	"	Q2	"		
	$t_{(HOLD)}$ (H)	"	116						"	"		OUT	5.0 V	IN (D)	IN (F)	F	"	Q2	"		
		"	117	F	IN (F)	IN (D)	5.0 V	OUT										Q1	"		
		"	118	F	IN (F)	IN (D)	5.0 V		OUT	"							"	$\overline{Q}1$	"		
		"	119						"	"	OUT		5.0 V	IN (D)	IN (F)	F	"	$\overline{Q}2$	"		
	$t_{(HOLD)}$ (L)	"	120							"	OUT		F	IN (D)	IN (E)	5.0 V	"	$\overline{Q}2$	"		
		"	121	5.0 V	IN (E)	IN (D)	F		OUT	"							"	$\overline{Q}1$	"		
		"	122	5.0 V	IN (E)	IN (D)	F	OUT										Q1	"		
		"	123							"		OUT	F	IN (D)	IN (E)	5.0 V	"	Q2	"		

See footnotes at end of device type 01.

TABLE III. Group A inspection for device type 01 - Continued.
Terminal conditions (pins not designated may be high ≥ 2.0 V, low ≤ 0.8 V, or open).

Subgroup	Symbol	MIL-STD-883 method	Cases X, 2 1/	2	3	4	6	8	9	10	12	13	14	16	18	19	20	Measured terminal	Test limits		Unit
			Cases A, B,C,D	1	2	3	4	5	6	7	8	9	10	11	12	13	14		Min	Max	
			Test no.	CLR 1	D1	CLK 1	PRE 1	Q1	$\overline{Q}1$	GND	$\overline{Q}2$	Q2	PRE 2	CLK 2	D2	CLR 2	V_{CC}				
10 T_C = +125°C	f_{MAX}	Fig. 5	124, 145	Same tests and terminal conditions as subgroup 9, except T_C = +125°C and limits are as shown.																	MHz
	t_{PLH1}	Fig. 4	126-129															55	2.0	10.0	ns
	t_{PLH2}	Fig. 5 8/	130-133																"	16.0	"
	t_{PHL2}	Fig. 5 8/	134-137																"	13.0	"
	t_{PHL3}	Fig. 5	138-141																"	19.0	"
	t_{PHL4}	Fig. 4	142-145																	12.5	"
	t_{SETUP} (H)	Fig. 5	146-149															"	8/		
	t_{SETUP} (L)	"	150-153																		
	$t_{(HOLD)}$ (H)	"	154-157															"	"		
	$t_{(HOLD)}$ (L)	"	158-161																"		
11	Same tests, terminal conditions, and limits as for subgroup 10, except T_C = -55°C.																				

1/ Cases X and 2 terminals not designated are NC.
2/ C = Normal clock pulse.
D = Momentary connection: 5.0 V to GND to 5.0 V (for subgroup 9, 10, 11. D occurs prior to their input pulses).
E = Data input connected to Q output.
F = Normal input conditioning is 5.0 V, however, momentary logic "0" may be applied for synchronizing test equipment for preconditioning the device.
3/ For circuit B, $I_{OS(max)}$ is –110 mA.
4/ Only a summary of attributes data is required.
5/ Inputs: A = 2.4 V minimum, B = 0.4 V.
6/ Outputs: H ≥ 1.5 V, L ≤ 1.5 V.
7/ f_{MAX}, minimum limit specified is the frequency of the input pulse. The output frequency shall be one-half of the input frequency.
8/ SETUP and HOLD time functionality may be verified by separate tests from propagation delay tests, by monitoring the output at specified SETUP and HOLD conditions (see fig. 5).

TABLE III. Group A inspection for device type 02.
Terminal conditions (pins not designated may be high ≥ 2.0 V, low ≤ 0.8 V, or open).

Subgroup	Symbol	MIL-STD-883 method	Case X,2 1/	2	3	4	5	7	8	9	10	12	13	14	15	17	18	19	20	Measured terminal	Test limits Min	Test limits Max	Unit
			Cases E, F	1	2	3	4	5	6	7	8	9	10	11	12	13	14	15	16				
			Test no.	CLK 1	K1	J1	PRE 1	Q1	$\overline{Q1}$	$\overline{Q2}$	GND	Q2	PRE 2	J2	K2	CLK 2	CLR 2	CLR 1	V_{CC}				
1	V_{OH}	3006	1	C 2/	0.8 V	2.0 V	2.0 V	-1 mA			GND							2.0 V	4.5 V	Q1	2.5		V
T_C =25°C		"	2								"	-1 mA	2.0 V	2.0 V	0.8 V	C	2.0 V		"	Q2	"		"
		"	3	C	2.0 V	0.8 V	2.0 V		-1 mA		"							2.0 V	"	$\overline{Q1}$	"		"
		"	4							-1 mA	"		2.0 V	0.8 V	2.0 V	C	2.0 V		"	$\overline{Q2}$	"		"
		"	5	5.5 V	5.5 V	5.5 V	0.8 V	-1 mA			"							2.0 V	"	Q1	"		"
		"	6								"	-1 mA	0.8 V	5.5 V	5.5 V	5.5 V	2.0 V		"	Q2	"		"
		"	7	5.5 V	5.5 V	5.5 V	2.0 V		-1 mA		"							0.8 V	"	$\overline{Q1}$	"		"
		"	8							-1 mA	"		2.0 V	5.5 V	5.5 V	5.5 V	0.8 V		"	$\overline{Q2}$	"		"
	V_{OL}	3007	9	C	0.8 V	2.0 V	2.0 V		20 mA		"							2.0 V	"	$\overline{Q1}$			"
		"	10							20 mA	"		2.0 V	2.0 V	0.8 V	C	2.0 V		"	$\overline{Q2}$			"
		"	11	C	2.0 V	0.8 V	2.0 V	20 mA			"							2.0 V	"	Q1	0.5		"
		"	12								"	20 mA	2.0 V	0.8 V	2.0 V	C	2.0 V		"	Q2	"		"
		"	13	5.5 V	5.5 V	5.5 V	0.8 V		20 mA		"							2.0 V	"	$\overline{Q1}$	"		"
		"	14							20 mA	"		0.8 V	5.5 V	5.5 V	5.5 V	2.0 V		"	$\overline{Q2}$	"		"
		"	15	5.5 V	5.5 V	5.5 V	2.0 V	20 mA			"							0.8 V	"	Q1	"		"
		"	16								"	20 mA	2.0 V	5.5 V	5.5 V	5.5 V	0.8 V		"	Q2	"		"
	V_{IC}		17	-18 mA							"								"	CLK 1	"	-1.2	"
			18		-18 mA						"								"	K1	"	"	"
			19			-18 mA					"								"	J1		"	"
			20				-18 mA				"								"	PRE 1		"	"
			21								"		-18 mA						"	PRE 2		"	"
			22								"			-18 mA					"	J2		"	"
			23								"				-18 mA				"	K2		"	"
			24								"					-18 mA			"	CLK 2		"	"
			25								"						-18 mA		"	CLR 2		"	"
			26								"							-18 mA	"	CLR 1		"	"
	I_{IL1}	3009	27	5.5 V	0.5 V	5.5 V	D				"							5.5 V	5.5 V	K1	-0.7	-1.6	mA
		"	28								"		D	5.5 V	0.5 V	5.5 V	5.5 V		"	K2	"	"	"
		"	29	5.5 V	5.5 V	0.5 V	5.5 V				"							D	"	J1	"	"	"
		"	30								"		5.5 V	0.5 V	5.5 V	5.5 V	D		"	J2	"	"	"
	I_{IL2}	"	31	5.5 V	5.5 V	5.5 V	5.5 V				"							0.5 V	"	CLR 1	-0.8	-7.0	"
	I_{IL2}	"	32								"		5.5 V	5.5 V	5.5 V	5.5 V	0.5 V		"	CLR 2	-0.8	-7.0	"

See footnotes at end of device type 02.

TABLE III. Group A inspection for device type 02.
Terminal conditions (pins not designated may be high ≥ 2.0 V, low ≤ 0.8 V, or open).

Subgroup	Symbol	MIL-STD-883 method	Case X,2 1/	2	3	4	5	7	8	9	10	12	13	14	15	17	18	19	20	Measured terminal	Test limits		Unit
			Cases E,F	1	2	3	4	5	6	7	8	9	10	11	12	13	14	15	16		Min	Max	
			Test no.	CLK 1	K1	J1	PRE 1	Q1	$\overline{Q}1$	$\overline{Q}2$	GND	Q2	PRE 2	J2	K2	CLK 2	CLR 2	CLR 1	V_{CC}				
1	I_{IL3}	3009	33	5.5 V	5.5 V	5.5 V	0.5 V				GND							5.5 V	5.5 V	PRE 1	-0.8	-6.0	mA
T_C = +25°C	I_{IL3}	"	34								"		0.5 V	5.5 V	5.5 V	5.5 V	5.5 V		"	PRE 2	-0.8	-6.0	"
	I_{IL4}	"	35	0.5 V	5.5 V	5.5 V	5.5 V				"							D	"	CLK 1	-2 3/	-4	"
	I_{IL4}	"	36								"		5.5 V	5.5 V	5.5 V	0.5 V	D		"	CLK 2	-2 3/	-4	"
	I_{IH1}	3010	37	GND	2.7 V	5.5 V	GND				"							5.5 V	"	K1		50	µA
		"	38								"		GND	5.5 V	2.7 V	GND	5.5 V		"	K2		"	"
		"	39	GND	5.5 V	2.7 V	5.5 V				"							GND	"	J1		"	"
		"	40								"		5.5 V	2.7 V	5.5 V	GND	GND		"	J2		"	"
	I_{IH5}	"	41	GND	5.5 V	5.5 V	GND				"							5.5 V	"	K1		1	mA
		"	42								"		GND	5.5 V	5.5 V	GND	5.5 V		"	K2		"	"
		"	43	GND	5.5 V	5.5 V	5.5 V				"							GND	"	J1		"	"
		"	44								"		5.5 V	5.5 V	5.5 V	GND	GND		"	J2		"	"
	I_{IH2}	"	45	GND	5.5 V	GND	D				"							2.7 V	"	CLR 1		100	µA
	I_{IH2}	"	46								"		D	GND	5.5 V	GND	2.7 V		"	CLR 2		100	µA
	I_{IH5}	"	47	GND	5.5 V	GND	D				"							5.5 V	"	CLR 1			mA
	I_{IH5}	"	48								"		D	GND	5.5 V	GND	5.5 V		"	CLR 2			mA
	I_{IH3}	"	49	GND	GND	5.5 V	2.7 V				"							D	"	PRE 1	1	100	µA
	I_{IH3}	"	50								"		2.7 V	5.5 V	GND	GND	D		"	PRE 2	1	100	µA
	I_{IH5}	"	51	GND	GND	5.5 V	5.5 V				"							D	"	PRE 1			mA
	I_{IH5}	"	52								"		5.5 V	5.5 V	GND	GND	D		"	PRE 2			mA
	I_{IH4}	"	53	2.7 V	GND	GND	GND				"							GND	"	CLK 1	1	100	µA
	I_{IH4}	"	54								"		GND	GND	GND	2.7 V	GND		"	CLK 2	1	100	µA
	I_{IH5}	"	55	5.5 V	GND	GND	GND				"							GND	"	CLK 1		1	mA
	I_{IH5}	"	56								"		GND	GND	GND	5.5 V	GND		"	CLK 2		1	"
	I_{OS}	3011	57	5.5 V	5.5 V	5.5 V	GND	GND			"							5.5 V	"	Q1	-40	100	"
		"	58								"	GND	GND	5.5 V	5.5 V	5.5 V	5.5 V		"	Q2	"	4/	"
		"	59	5.5 V	5.5 V	5.5 V	5.5 V		GND		"							GND	"	$\overline{Q}1$	"	"	"
		"	60							GND	"		5.5 V	5.5 V	5.5 V	5.5 V	GND		"	$\overline{Q}2$	"	"	"
	I_{CC}	3005	61	5.5 V	5.5 V	5.5 V	GND				"		GND	5.5 V	5.5 V	5.5 V	5.5 V	5.5 V	"	V_{CC}		50	"
	I_{CC}	3005	62	5.5 V	5.5 V	5.5 V	5.5 V				"		5.5 V	5.5 V	5.5 V	5.5 V	GND	GND	"	V_{CC}			"

See footnotes at end of device type 02.

TABLE III. Group A inspection for device type 02 - Continued.
Terminal conditions (pins not designated may be high ≥ 2.0 V, low ≤ 0.8 V, or open).

Subgroup	Symbol	MIL-STD-883 method	Case X,2 1/	2	3	4	5	7	8	9	10	12	13	14	15	17	18	19	20	Measured terminal	Test limits Min	Test limits Max	Unit
			Cases E,F	1	2	3	4	5	6	7	8	9	10	11	12	13	14	15	16				
			Test no.	CLK 1	K1	J1	PRE 1	Q1	$\overline{Q}1$	$\overline{Q}2$	GND	Q2	PRE 2	J2	K2	CLK 2	CLR 2	CLR 1	V_{CC}				
1	I_{CEX}		63	C	GND	5.5 V	GND	5.5 V			GND							5.5 V	5.5 V	Q1		250	µA
T_C = +25°C			64								"	5.5 V	GND	5.5 V	GND	C	5.5 V		"	Q2		"	"
			65	C	5.5 V	GND	5.5 V		5.5 V		"							GND	"	$\overline{Q}1$		"	"
			66							5.5 V	"		5.5 V	GND	5.5 V	C	GND		"	$\overline{Q}2$		"	"
2	Same tests, terminal conditions, and limits as for subgroup 1, except T_C = +125°C and V_{IC} tests are omitted. V_{OL} (max) = 0.45 V, V_{IL} = 0.7 V.																						
3	Same tests, terminal conditions, and limits as for subgroup 1, except T_C = -55°C and V_{IC} tests are omitted.																						
7 5/ 6/			67	B	B	A	A	L	H	H	GND	L	A	A	B	B	B	B	4.5 V	All	H or L 7/		V
T_C= +25°C			68	A	"	"	"	"	"	"	"	"	"	"	"	A	"	"	"	outputs	as shown		"
			69	B	"	"	"	"	"	"	"	"	"	"	"	B	"	"	"	"	"		"
			70	B	A	B	B	H	L	L	"	H	B	B	A	B	A	A	"	"	"		"
			71	A	"	"	"	"	"	"	"	"	"	"	"	A	"	"	"	"	"		"
			72	B	"	"	"	"	"	"	"	"	"	"	"	B	"	"	"	"	"		"
			73	"	B	"	A	L	H	H	"	L	A	"	B	"	B	B	"	"	"		"
			74	"	"	"	"	"	"	"	"	"	"	"	"	"	A	A	"	"	"		"
			75	A	"	"	"	"	"	"	"	"	"	"	"	A	"	"	"	"	"		"
			76	B	"	"	"	"	"	"	"	"	"	"	"	B	"	"	"	"	"		"
			77	"	"	"	B	H	L	L	"	H	B	"	"	"	"	"	"	"	"		"
			78	"	"	"	A	"	"	"	"	"	A	"	"	"	"	"	"	"	"		"
			79	A	"	"	"	"	"	"	"	"	"	"	"	A	"	"	"	"	"		"
			80	B	"	"	"	"	"	"	"	"	"	"	"	B	"	"	"	"	"		"
			81	B	"	A	"	L	H	H	"	L	"	A	"	B	B	B	"	"	"		"
			82	B	"	"	"	"	"	"	"	"	"	"	"	B	A	A	"	"	"		"
			83	A	"	"	"	"	"	"	"	"	"	"	"	A	"	"	"	"	"		"
			84	B	"	"	"	H	L	L	"	H	"	"	"	B	"	"	"	"	"		"
			85	"	A	B	B	"	"	"	"	"	B	B	A	"	"	"	"	"	"		"
			86	"	"	"	A	"	"	"	"	"	A	"	"	"	"	"	"	"	"		"
			87	A	"	"	"	"	"	"	"	"	"	"	"	A	"	"	"	"	"		"
			88	B	"	"	"	L	H	H	"	L	"	"	"	B	"	"	"	"	"		"
			89	A	"	A	B	H	"	"	"	H	B	A	"	A	B	B	"	"	"		"
			90	B	"	"	A	L	"	"	"	L	A	"	"	B	B	B	"	"	"		"
			91	B	"	"	"	"	"	"	"	"	"	"	"	B	A	A	"	"	"		"
			92	A	"	"	"	"	"	"	"	"	"	"	"	A	A	A	"	"	"		"

See footnotes at end of device type 02.

TABLE III. Group A inspection for device type 02 - Continued.
Terminal conditions (pins not designated may be high ≥ 2.0 V, low ≤ 0.8 V, or open).

Subgroup	Symbol	MIL-STD-883 method	Case X,2 1/	2	3	4	5	7	8	9	10	12	13	14	15	17	18	19	20	Measured terminal	Test limits Min	Test limits Max	Unit
			Cases E,F	1	2	3	4	5	6	7	8	9	10	11	12	13	14	15	16				
			Test no.	CLK 1	K1	J1	PRE 1	Q1	$\overline{Q}1$	$\overline{Q}2$	GND	Q2	PRE 2	J2	K2	CLK 2	CLR 2	CLR 1	V_{CC}				
7 5/ 6/			93	B	A	A	A	H	L	L	GND	H	A	A	A	B	A	A	4.5 V	All	H or L 7/		V
T_C = +25°C			94	A	"	"	"	H	L	L	"	H	"	"	"	A	"	"	"	outputs	as shown		"
			95	B	"	"	"	L	H	H	"	L	"	"	"	B	"	"	"	"	"		"
8 5/ 6/	Same tests, terminal conditions and limits as for subgroup 7, except T_C = +125°C and -55°C.																						
9	f_{MAX}	Fig. 7	96	IN (A)	2.7 V	2.7 V	2.7 V	OUT			GND							2.7 V	5.0 V	Q1	80		MHz
T_C = +25°C	8/	"	97								"	OUT	2.7 V	2.7 V	2.7 V	IN (A)	2.7 V		"	Q2	"		"
		"	98	IN (A)	2.7 V	2.7 V	2.7 V		OUT		"							2.7 V	"	$\overline{Q}1$	"		"
		"	99							OUT	"		2.7 V	2.7 V	2.7 V	IN (A)	2.7 V		"	$\overline{Q}2$	"		"
	t_{PLH1}	Fig. 6	100	2.7 V	2.7 V	2.7 V	IN (C)	OUT			"							IN (B)	"	PRE 1 to Q1	2.0	9.0	ns
		"	101								"	OUT	IN (C)	2.7 V	2.7 V	2.7 V	IN (B)		"	PRE 2 to Q2	"	"	"
		"	102	2.7 V	2.7 V	2.7 V	IN (B)		OUT		"							IN (C)	"	CLR 1 to $\overline{Q}1$	"	"	"
		"	103							OUT	"		IN (B)	2.7 V	2.7 V	2.7 V	IN (C)		"	CLR 2 to $\overline{Q}2$	"	"	"
	t_{PLH2}	Fig. 7	104	IN (A)	2.7 V	2.7 V	2.7 V		OUT		"							E	"	CLK 1 to $\overline{Q}1$	"	"	"
		"	105							OUT	"		2.7 V	2.7 V	2.7 V	IN (A)	E		"	CLK 2 to $\overline{Q}2$	"	"	"
		"	106	IN (A)	2.7 V	2.7 V	E	OUT			"							2.7 V	"	CLK 1 to Q1	"	"	"
		"	107								"	OUT	E	2.7 V	2.7 V	IN (A)	2.7 V		"	CLK 2 to Q2	"	"	"
	t_{PHL3}	Fig. 6	108	2.7 V	2.7 V	2.7 V	IN (C)		OUT		"							IN (B)	"	PRE 1 to $\overline{Q}1$	"	9.75	"
		"	109							OUT	"		IN (C)	2.7 V	2.7 V	2.7 V	IN (B)		"	PRE 2 to $\overline{Q}2$	"	"	"
		"	110	2.7 V	2.7 V	2.7 V	IN (B)	OUT			"							IN (C)	"	CLR 1 to Q1	"	"	"
		"	111								"	OUT	IN (B)	2.7 V	2.7 V	2.7 V	IN (C)		"	CLR 2 to Q2	"	"	"
	t_{PHL2}	Fig. 7	112	IN (A)	2.7 V	2.7 V	2.7 V		OUT		"							E	"	CLK 1 to $\overline{Q}1$	"	9.0	"
		"	113							OUT	"		2.7 V	2.7 V	2.7 V	IN (A)	E		"	CLK 2 to $\overline{Q}2$	"	"	"
		"	114	IN (A)	2.7 V	2.7 V	E	OUT			"							2.7 V	"	CLK 1 to Q1	"	"	"
		"	115								"	OUT	E	2.7 V	2.7 V	IN (A)	2.7 V		"	CLK 2 to Q2	"	"	"
	t_{SETUP} (L)	Fig. 8	116	IN (A)	2.7 V	IN (D)	E	OUT			"							2.7 V	"	Q1	9/		
		"	117								"	OUT	E	IN (D)	2.7 V	IN (A)	2.7 V		"	Q2	"		
		"	118	IN (A)	IN (D)	2.7 V	2.7 V		OUT		"							E	"	$\overline{Q}1$	"		
		"	119							OUT	"		2.7 V	2.7 V	IN (D)	IN (A)	E		"	$\overline{Q}2$	"		
	t_{SETUP} (H)	"	120	IN (A)	2.7 V	IN (E)	2.7 V	OUT			"							E	"	Q1	"		
		"	121								"	OUT	2.7 V	IN (E)	2.7 V	IN (A)	E		"	Q2	"		
		"	122	IN (A)	IN (E)	2.7 V	E		OUT		"							2.7 V	"	$\overline{Q}1$	"		
		"	123							OUT	"		E	2.7 V	IN (E)	IN (A)	2.7 V		"	$\overline{Q}2$	"		

See footnotes at end of device type 02.

TABLE III. Group A inspection for device type 02 - Continued.
Terminal conditions (pins not designated may be high ≥ 2.0 V, low ≤ 0.8 V, or open).

Subgroup	Symbol	MIL-STD-883 method	Case X,2 1/	2	3	4	5	7	8	9	10	12	13	14	15	17	18	19	20	Measured terminal	Test limits		Unit
			Cases E,F	1	2	3	4	5	6	7	8	9	10	11	12	13	14	15	16		Min	Max	
			Test no.	CLK 1	K1	J1	PRE 1	Q1	$\overline{Q}1$	$\overline{Q}2$	GND	Q2	PRE 2	J2	K2	CLK 2	CLR 2	CLR 1	V_{CC}				
9	t_{HOLD}	Fig. 8	124	IN (A)	2.7 V	IN (F)	E	OUT			GND							2.7 V	5.0 V	Q1	9/		
T_C = +25°C	(L)	"	125								"	OUT	E	IN (F)	2.7 V	IN (A)	2.7 V		"	Q2	"		
		"	126	IN (A)	IN (F)	2.7 V	2.7 V		OUT		"							E	"	$\overline{Q}1$	"		
		"	127							OUT	"		2.7 V	2.7 V	IN (F)	IN (A)	E		"	$\overline{Q}2$	"		
	t_{HOLD}	"	128	IN (A)	2.7 V	IN (G)	2.7 V	OUT			"							E	"	Q1	"		
	(H)	"	129								"	OUT	2.7 V	IN (G)	2.7 V	IN (A)	E		"	Q2	"		
		"	130	IN (A)	IN (G)	2.7 V	E		OUT		"							2.7 V	"	$\overline{Q}1$	"		
		"	131							OUT	"		E	2.7 V	IN (G)	IN (A)	2.7 V		"	$\overline{Q}2$	"		
10	f_{MAX}	Fig. 7	132-135	Same tests and terminal conditions as for subgroup 9, except T_C = +125°C and limits are as shown.																	60		MHz
T_C = +125°C	8/																						
	t_{PLH1}	Fig. 6	136-139																		2.0	11.0	ns
	t_{PLH2}	Fig. 7	140-143																		"	"	"
	t_{PHL3}	Fig. 6	144-149																		"	"	"
	t_{PHL2}	Fig. 7	148-151																		"	"	"
	t_{SETUP}	Fig. 8	152-155																		9/		

(L)

TABLE III. Group A inspection for device type 02 - Continued.
Terminal conditions (pins not designated may be high ≥ 2.0 V, low ≤ 0.8 V, or open).

Subgroup	Symbol	MIL-STD-883 method	Case X,2 1/	2	3	4	5	7	8	9	10	12	13	14	15	17	18	19	20	Measured terminal	Test limits		Unit
			Cases E,F	1	2	3	4	5	6	7	8	9	10	11	12	13	14	15	16				
			Test no.	CLK 1	K1	J1	PRE 1	Q1	$\overline{Q}1$	$\overline{Q}2$	GND	Q2	PRE 2	J2	K2	CLK 2	CLR 2	CLR 1	V_{CC}		Min	Max	
10 T_C = +125°C	t_{SETUP} (H)	Fig. 8	156-159	Same tests and terminal conditions as for subgroup 9, except T_C = +125°C and limits are as shown.																	9/		
	t_{HOLD}	"	160-163																		"		
	t_{HOLD}	"	164-167																		"		
11 (L) (H)	Same tests, terminal conditions, and limits as for subgroup 10, except T_C = -55°C.																						

1/ Cases X and 2 terminals not designated are NC.
2/ C = Normal clock pulse.

D = 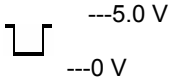

E = Normal input conditioning is 5.0 V, however, momentary logic "0" may be applied to input for synchronizing test equipment and preconditioning device under test.

3/ For circuit B, I_{IL4}(min) is -0.7 mA.
4/ For circuit B, $I_{OS(max)}$ is –110 mA.
5/ Only a summary of attributes data is required.
6/ Inputs: A = 2.4 minimum, 8 = 0.4 V.
7/ Outputs: L ≤ 1.5 V, H ≥ 1.5 V.
8/ f_{MAX}, minimum limit specified is the frequency of the input pulse. The output frequency shall be one-half of the input frequency.
9/ Setup and hold time functionally may be verified by separate tests from propagation delay tests by monitoring the outputs at specified setup and hold conditions.

TABLE III. Group A inspection for device type 03.
Terminal conditions (pins not designated may be high ≥ 2.0 V, low ≤ 0.8 V, or open).

Subgroup	Symbol	MIL-STD-883 method	Cases X,2 1/	2	3	4	6	8	9	10	12	13	14	16	18	19	20	Measured terminal	Test limits		Unit
			Cases A, B,C,D	1	2	3	4	5	6	7	8	9	10	11	12	13	14		Min	Max	
			Test no.	CLK 1	K1	J1	PRE 1	Q1	$\overline{Q}1$	GND	$\overline{Q}2$	Q2	PRE 2	J2	K2	CLK 2	V_{CC}				
1	V_{OH}	3005	1	C 2/	0.8 V	2.0 V	2.0 V	-1 mA		GND							4.5 V	Q1	2.5		V
T_C = +25°C		"	2							"		-1 mA	2.0 V	2.0 V	0.8 V	C	"	Q2	"		"
		"	3	C	2.0 V	0.8 V	2.0 V		-1 mA	"							"	$\overline{Q}1$	"		"
		"	4							"	-1 mA		2.0 V	0.8 V	2.0 V	C	"	$\overline{Q}2$	"		"
		"	5				0.8 V	-1 mA		"							"	Q1	"		"
		"	6							"		-1 mA	0.8 V				"	Q2	"		"
	V_{OL}	3007	7	C	0.8 V	2.0 V	2.0 V		20 mA	"							"	$\overline{Q}1$		0.5	"
		"	8							"	20 mA		2.0 V	2.0 V	0.8 V	C	"	$\overline{Q}2$			"
		"	9	C	2.0 V	0.8 V	2.0 V	20 mA		"							"	Q1			"
		"	10							"		20 mA	2.0 V	0.8 V	2.0 V	C	"	Q2	"	"	"
		"	11				0.8 V		20 mA	"							"	$\overline{Q}1$	"		"
		"	12							"	20 mA		0.8 V				"	$\overline{Q}2$			"
	V_{IC}		13	-18 mA						"							"	CLK 1	"		"
			14		-18 mA					"							"	K1	"	"	"
			15			-18 mA				"							"	J1	-1.2		"
			16				-18 mA			"							"	PRE 1		"	"
			17							"			-18 mA				"	PRE 2	"	"	"
			18							"				-18 mA			"	J2		"	"
			19							"					-18 mA		"	K2		"	"
			20							"						-18 mA	"	CLK 2		"	"
	I_{IL1}	3009	21	5.5 V	0.5 V	GND	D			"							5.5 V	K1	-.7	-1.6	mA
		"	22							"			D	GND	0.5 V	5.5 V	"	K2	"	"	"
		"	23	D	5.5 V	0.5 V	5.5 V			"							"	J1	"	"	"
		"	24							"			5.5 V	0.5 V	5.5 V	D	"	J2	"	"	"
	I_{IL3}	"	25	5.5 V	5.5 V	5.5 V	0.5 V			"							"	PRE 1	-0.8	-6.0	"
	I_{IL3}	"	26							"			0.5 V	5.5 V	5.5 V	5.5 V	"	PRE 2	-0.8	-6.0	"
	I_{IL4}	"	27	0.5 V	5.5 V	5.5 V	D			"							"	CLK 1	-2.0 3/	-4.0	"
	I_{IL4}	"	28							"			D	5.5 V	5.5 V	0.5 V	"	CLK 2	-2.0 3/	-4.0	"
	I_{IH1}	3010	29	GND	2.7 V	GND	GND			"							"	K1		50	µA
		"	30							"			GND	GND	2.7 V	GND	"	K2		"	"
		"	31	C	GND	2.7 V	5.5 V			"							"	J1		"	"
		"	32							"			5.5 V	2.7 V	GND	C	"	J2		"	"

See footnotes at end of device type 03.

TABLE III. Group A inspection for device type 03 - Continued.
Terminal conditions (pins not designated may be high ≥ 2.0 V, low ≤ 0.8 V, or open).

Subgroup	Symbol	MIL-STD-883 method	Cases X,2 1/	2	3	4	6	8	9	10	12	13	14	16	18	19	20	Measured terminal	Test limits Min	Test limits Max	Unit
			Cases A, B,C,D	1	2	3	4	5	6	7	8	9	10	11	12	13	14				
			Test no.	CLK 1	K1	J1	PRE 1	Q1	$\overline{Q}1$	GND	$\overline{Q}2$	Q2	PRE 2	J2	K2	CLK 2	V_{CC}				
1	I_{IH4}	3010	33	2.7 V	GND	GND	GND			GND							5.5 V	CLK 1		100	µA
T_C = +25°C	I_{IH4}	"	34							"			GND	GND	GND	2.7 V	"	CLK 2		"	"
	I_{IH3}	"	35	GND	GND	5.5 V	2.7 V	F 7/		"							"	PRE 1		"	"
	I_{IH3}	"	36							"		F	2.7 V	5.5 V	GND	GND	"	PRE 2		"	"
	I_{IH5}	"	37	GND	5.5 V	GND	GND			"							"	K1			mA
		"	38							"			GND	GND	5.5 V	GND	"	K2		"	"
		"	39	C	GND	5.5 V	5.5 V			"							"	J1	1.0		"
		"	40							"			5.5 V	5.5 V	GND	C	"	J2		"	"
		"	41	5.5 V	GND	GND	GND			"							"	CLK 1	"		"
		"	42							"			GND	GND	GND	5.5 V	"	CLK 2		"	"
		"	43	GND	GND	5.5 V	5.5 V	F		"							"	PRE 1	"		"
		"	44							"		F	5.5 V	5.5 V	GND	GND	"	PRE 2		"	"
	I_{OS}	3011	45				GND	GND		"							"	Q1	-40	-100 4/	"
		"	46							"		GND	GND				"	Q2	-40	-100	"
		"	47	C	5.5 V	GND	5.5 V	GND	2.25 V	"							"	$\overline{Q}1$	-20	-50	"
		"	48							"	2.25 V	GND	5.5 V	GND	5.5 V	C	"	$\overline{Q}2$	-20	-50	"
	I_{CC}	3005	49	GND	GND	GND	GND			"			GND	GND	GND	GND	"	V_{CC}		50	"
	I_{CC}	3005	50	C	5.5 V	GND	5.5 V			"			5.5 V	GND	5.5 V	C	"	V_{CC}			"
	I_{CEX}		51	C	GND	5.5 V	GND	5.5 V		"							"	Q1		250	µA
			52							"		5.5 V	GND	5.5 V	GND	C	"	Q2	50	"	"
			53	C	5.5 V	GND	5.5 V	GND	5.5 V	"							"	$\overline{Q}1$			"
			54							"	5.5 V	GND	5.5 V	GND	5.5 V	C	"	$\overline{Q}2$			"
2	Same tests, terminal conditions, and limits as for subgroup 1, except T_C = +125°C and V_{IC} tests are omitted. V_{OL} (max) = 0.45 V, V_{IL} = 0.7 V.																		"		
3	Same tests, terminal conditions, and limits as for subgroup 1, except T_C = -55°C and V_{IC} tests are omitted.																		"		
7 5/ 6/			55	B	A	B	B	H	L	GND	L	H	B	B	B	B	4.5 V	All	H or L 7/		V
T_C = +25°C			56	A	"	"	"	"	"	"	"	"	"	"	"	"	"	outputs	as shown		"
			57	B	"	"	"	"	"	"	"	"	"	"	"	"	"	"	"		"
			58	B	"	"	A	"	"	"	"	"	"	"	"	"	"	"	"		"
			59	A	"	"	"	"	"	"	"	"	"	"	"	"	"	"	"		"
			60	B	"	"	"	L	H	"	"	"	"	"	"	"	"	"	"		"
			61	B	B	A	"	"	"	"	"	"	"	"	"	"	"	"	"		"
			62	A	"	"	"	"	"	"	"	"	"	"	"	"	"	"	"		"
			63	B	"	"	"	H	L	"	"	"	"	"	"	"	"	"	"		"
			64	B	"	B	B	H	L	"	"	"	"	"	A	"	"	"	"		"

See footnotes at end of device type 03.

TABLE III. Group A inspection for device type 03 - Continued.
Terminal conditions (pins not designated may be high ≥ 2.0 V, low ≤ 0.8 V, or open).

Subgroup	Symbol	MIL-STD-883 method	Cases X,2 1/	2	3	4	6	8	9	10	12	13	14	16	18	19	20	Measured terminal	Test limits		Unit
			Cases A, B,C,D	1	2	3	4	5	6	7	8	9	10	11	12	13	14		Min	Max	
			Test no.	CLK 1	K1	J1	PRE 1	Q1	$\overline{Q}1$	GND	$\overline{Q}2$	Q2	PRE 2	J2	K2	CLK 2	V_{CC}				
7 5/ 6/ T_C = +25°C			65	B	B	B	B	H	L	GND	L	H	A	B	A	B	4.5 V	All outputs	H or L 7/ as shown		V
			66	"	"	"	"	"	"	"	L	H	"	"	"	A	"				"
			67	"	"	"	"	"	"	"	H	L	"	"	"	B	"	"	"		"
			68	"	"	"	"	"	"	"	"	"	"	A	B	B	"	"	"		"
			69	"	"	"	"	"	"	"	"	"	"	"	"	A	"	"	"		"
			70	"	"	"	"	"	"	"	L	H	"	"	"	B	"	"	"		"
			71	"	"	"	"	"	"	"	"	"	B	B	"	"	"	"	"		"
			72	"	"	"	A	"	"	"	"	"	A	"	"	"	"	"	"		"
			73	A	"	"	"	"	"	"	"	"	"	"	"	A	"	"	"		"
			74	B	"	"	"	"	"	"	"	"	"	"	"	B	"	"	"		"
			75	B	A	A	"	"	"	"	"	"	"	A	A	B	"	"	"		"
			76	A	"	"	"	"	"	"	"	"	"	"	"	A	"	"	"		"
			77	B	"	"	"	L	H	"	H	L	"	"	"	B	"	"	"		"
			78	B	B	B	"	"	"	"	"	"	"	B	B	B	"	"	"		"
			79	A	"	"	"	"	"	"	"	"	"	"	"	A	"	"	"		"
			80	B	"	"	"	"	"	"	"	"	"	"	"	B	"	"	"		"
			81	B	A	A	A	"	"	"	"	"	"	A	A	B	"	"	"		"
			82	A	"	"	"	"	"	"	"	"	"	"	"	A	"	"	"		"
			83	B	"	"	"	H	L	"	L	H	"	"	"	B	"	"	"		"
8 5/ 6/	Same tests, terminal conditions and limits as for subgroup 7, except T_C = +125°C and -55°C.																				
9 T_C = +25°C	f_{MAX} 8/	Fig. 10	84	IN (B)	2.7 V	2.7 V	2.7 V	OUT		GND							5.0 V	Q1	80		MHz
		"	85							"		OUT	2.7 V	2.7 V	2.7 V	IN (B)	"	Q2	"		"
		"	86	IN (B)	2.7 V	2.7 V	2.7 V		OUT	"							"	$\overline{Q}1$	"		"
		"	87							"	OUT		2.7 V	2.7 V	2.7 V	IN (B)	"	$\overline{Q}2$	"		"
	t_{PLH1}	Fig. 9	88	IN (C)	2.7 V	GND	IN (D)	OUT		"							"	PRE 1 to Q1	2.0	9.0	ns
	t_{PLH1}	Fig. 9	89							"		OUT	IN (D)	GND	2.7 V	IN (C)	"	PRE 2 to Q2	"	"	"
	t_{PLH2}	Fig. 10	90	IN (B)	2.7 V	2.7 V	E	OUT		"							"	CLK 1 to Q1	"	"	"
	t_{PLH2}	Fig. 10	91							"		OUT	E	2.7 V	2.7 V	IN (B)	"	CLK 2 to Q2	"	"	"

See footnotes at end of device type 03.

TABLE III. Group A inspection for device type 03 - Continued.
Terminal conditions (pins not designated may be high ≥ 2.0 V, low ≤ 0.8 V, or open).

Subgroup	Symbol	MIL-STD-883 method	Cases X,2 1/	2	3	4	6	8	9	10	12	13	14	16	18	19	20	Measured terminal	Test limits		Unit
			Cases A, B,C,D	1	2	3	4	5	6	7	8	9	10	11	12	13	14		Min	Max	
			Test no.	CLK 1	K1	J1	PRE 1	Q1	$\overline{Q}1$	GND	$\overline{Q}2$	Q2	PRE 2	J2	K2	CLK 2	V_{CC}				
9	t_{PLH3}	Fig. 10	92	IN (B)	2.7 V	2.7 V	E		OUT	GND							5.0 V	CLK 1 to $\overline{Q}1$	2.0	9.0	ns
T_C = +25°C	t_{PLH3}	Fig. 10	93							"	OUT		E	2.7 V	2.7 V	IN (B)	"	CLK 2 to $\overline{Q}2$	"	"	"
	t_{PHL1}	Fig. 9	94	IN (C)	2.7 V	GND	IN (D)		OUT	"							"	PRE 1 to $\overline{Q}1$	"	"	"
	t_{PHL1}	Fig. 9	95							"	OUT		IN (D)	GND	2.7 V	IN (C)	"	PRE 2 to $\overline{Q}2$	"	"	"
	t_{PHL2}	Fig. 10	96	IN (B)	2.7 V	2.7 V	E		OUT	"							"	CLK 1 to $\overline{Q}1$	"	"	"
	t_{PHL2}	"	97							"	OUT		E	2.7 V	2.7 V	IN (B)	"	CLK 2 to $\overline{Q}2$	"	"	"
	t_{PHL3}	"	98	IN (B)	2.7 V	2.7 V	E	OUT		"							"	CLK 1 to Q1	"	"	"
	t_{PHL3}	"	99							"		OUT	E	2.7 V	2.7 V	IN (B)	"	CLK 2 to Q2	"	"	"
	t_{SET} (H)	Fig. 11	100	IN (E)	2.7 V	IN (F)	E	OUT		"							"	Q1	9/		
		"	101							"		OUT	E	IN (F)	2.7 V	IN (E)	"	Q2	"		
		"	102	IN (E)	IN (F)	2.7 V	2.7 V	OUT		"							"	Q1	"		
		"	103							"		OUT	2.7 V	2.7 V	IN (F)	IN (E)	"	Q2	"		
	t_{SET} (L)	"	104	IN (E)	2.7 V	IN (G)	E	OUT		"							"	Q1	"		
		"	105							"		OUT	E	IN (G)	2.7 V	IN (E)	"	Q2	"		
		"	106	IN (E)	IN (H)	2.7 V	E	OUT		"							"	Q1	"		
		"	107							"		OUT	2.7 V	2.7 V	IN (H)	IN (E)	"	Q2	"		
	t_{HOLD} (H)	Fig. 12	108	IN (E)	2.7 V	IN (J)	E	OUT		"							"	Q1	"		
		"	109							"		OUT	E	IN (J)	2.7 V	IN (E)	"	Q2	"		
		"	110	IN (E)	IN (K)	2.7 V	E	OUT		"							"	Q1	"		
		"	111							"		OUT	E	2.7 V	IN (K)	IN (E)	"	Q2	"		
	t_{HOLD} (L)	"	112	IN (E)	2.7 V	IN (L)	E	OUT		"							"	Q1	"		
		"	113							"		OUT	E	IN (L)	2.7 V	IN (E)	"	Q2	"		
		"	114	IN (E)	IN (L)	2.7 V	2.7 V	OUT		"							"	Q1	"		
		"	115							"		OUT	2.7 V	2.7 V	IN (L)	IN (E)	"	Q2	"		

See footnotes at end of device type 03.

TABLE III. Group A inspection for device type 03 - Continued.
Terminal conditions (pins not designated may be high ≥ 2.0 V, low ≤ 0.8 V, or open).

Subgroup	Symbol	MIL-STD-883 method	Cases X,2 1/	2	3	4	6	8	9	10	12	13	14	16	18	19	20	Measured terminal	Test limits		Unit
			Cases A, B,C,D	1	2	3	4	5	6	7	8	9	10	11	12	13	14		Min	Max	
			Test no.	CLK 1	K1	J1	PRE 1	Q1	$\overline{Q}1$	GND	$\overline{Q}2$	Q2	PRE 2	J2	K2	CLK 2	V_{CC}				
10 T_C = +125°C	f_{MAX} 8/	Fig. 10	116-119	Same tests and terminal conditions as subgroup 9, except T_C = +125°C and limits are as shown.															60		MHz
	t_{PLH1}	Fig. 9	120-121																2.0	11.0	ns
	t_{PLH2}	Fig. 10	122-123																"	"	"
	t_{PLH3}	Fig. 10	124-125																"	"	"
	t_{PHL1}	Fig. 9	126-127																"	"	"
	t_{PHL2}	Fig. 10	128-129																"	"	"
	t_{PHL3}	Fig. 10	130-131																"	"	"
	$t_{SET(H)}$	Fig. 11	132-135																9/		
	$t_{SET(L)}$	Fig. 11	136-139																"		
	$t_{(HOLD)(L)}$	Fig. 12	140-143																"		
	$t_{(HOLD)(L)}$	Fig. 12	144-147																"		
11	Same tests, terminal conditions, and limits as for subgroup 10, except T_C = -55°C.																				

1/ Cases X and 2 terminals not designated are NC.
2/ C = Normal clock pulse.
D = Momentary connection: 5.0 V to GND to 5.0 V before measurement is made (for subgroups 9, 10, 11, D occurs prior to other input pulses).
E = Normal input conditioning is 2.7 V, however, momentary logic "0" may be applied to input for synchronizing test equipment and for preconditioning the device.
F = Momentary GND, then open.
3/ For circuit B, I_{IL4}(min) is -0.7 mA.
4/ For circuit B, $I_{OS(max)}$ is –110 mA.
5/ Only a summary of attributes data is required.
6/ Inputs: A = 2.4 V minimum, B = 0.4 V.
7/ Outputs: H ≥ 1.5 V, L ≤ 1.5 V.
8/ f_{MAX}, minimum limit specified is the frequency of the input pulse. The output frequency shall be one-half of the input frequency.
9/ Monitor output to verify functionally with $t_{(SET)}$ and $t_{(HOLD)}$ limit conditions as shown on figures 11 and 12.

TABLE III. Group A inspection for device type 04.
Terminal conditions (pins not designated may be high ≥ 2.0 V, low ≤ 0.8 V, or open).

Subgroup	Symbol	MIL-STD-883 method	Cases A, B,C,D	1	2	3	4	5	6	7	8	9	10	11	12	13	14	Measured terminal	Test limits		Unit
			Test no.	CLR	K1	J1	PRE 1	Q1	$\overline{Q}1$	GND	$\overline{Q}2$	Q2	PRE 2	J2	K2	CLK	V_{CC}		Min	Max	
1	V_{OH}	3006	1	2.0 V	0.8 V	2.0 V	2.0 V	-1 mA		GND						C 1/	4.5 V	Q1	2.5		V
T_C = +25°C		"	2	"						"		-1 mA	2.0 V	2.0 V	0.8 V	"	"	Q2	"		"
		"	3	"	2.0 V	0.8 V	2.0 V		-1 mA	"						"	"	$\overline{Q}1$	"		"
		"	4	"						"	-1 mA		2.0 V	0.8 V	2.0 V	"	"	$\overline{Q}2$	"		"
		"	5	"			0.8 V	-1 mA		"						5.5 V	"	Q1	"		"
		"	6	"						"		-1 mA	0.8 V			"	"	Q2	"		"
		"	7	0.8 V			2.0 V		-1 mA	"						"	"	$\overline{Q}1$	"		"
		"	8	0.8 V						"	-1 mA		2.0 V			"	"	$\overline{Q}2$	"		"
	V_{OL}	3007	9	2.0 V	0.8 V	2.0 V	2.0 V		20 mA	"						C	"	$\overline{Q}1$			"
		"	10	"						"	20 mA		2.0 V	2.0 V	0.8 V	"	"	$\overline{Q}2$			"
		"	11	"	2.0 V	0.8 V	2.0 V	20 mA		"						"	"	Q1	0.5		"
		"	12	"						"		20 mA	2.0 V	0.8 V	2.0 V	"	"	Q2	"	"	"
		"	13	"			0.8 V		20 mA	"						5.5 V	"	$\overline{Q}1$	"		"
		"	14	"						"	20 mA		0.8 V			"	"	$\overline{Q}2$			"
		"	15	0.8 V			2.0 V	20 mA		"						"	"	Q1	"		"
		"	16	0.8 V						"		20 mA	2.0 V			"	"	Q2	"	"	"
	V_{IC}		17	-18 mA						"							"	CLR	"	-1.2	"
			18		-18 mA					"							"	K1		"	"
			19			-18 mA				"							"	J1		"	"
			20				-18 mA			"							"	PRE 1		"	"
			21							"			-18 mA				"	PRE 2		"	"
			22							"				-18 mA			"	J2		"	"
			23							"					-18 mA		"	K2		"	"
			24							"						-18 mA	"	CLK		"	"
	I_{IL1}	3009	25	5.5 V	0.5 V	GND	D			"						5.5 V	5.5 V	K1	-0.7	-1.6	mA
		"	26	5.5 V						"			D	GND	0.5 V	"	"	K2	"	"	"
		"	27	D	GND	0.5 V	5.5 V			"						"	"	J1	"	"	"
		"	28	D						"			5.5 V	0.5 V	5.5 V	"	"	J2	"	"	"
	I_{IL3}	"	29	5.5 V	5.5 V	5.5 V	0.5 V			"						"	"	PRE 1	-0.8	-6.0	"
		"	30	5.5 V						"			0.5 V	5.5 V	5.5 V	"	"	PRE 2	-0.8	-6.0	"
	I_{IL2}	"	31	0.5 V	5.5 V	5.5 V	5.5 V			"			5.5 V	"	"	"	"	CLR	-1.6	-12.0	"
	I_{IL4}	"	32	D	5.5 V	5.5 V	5.5 V			"			5.5 V	"	"	0.5 V	"	CLK	-4.4	-8.0	"

See footnotes at end of device type 04.

TABLE III. Group A inspection for device type 04.
Terminal conditions (pins not designated may be high ≥ 2.0 V, low ≤ 0.8 V, or open).

Subgroup	Symbol	MIL-STD-883 method	Cases A, B,C,D	1	2	3	4	5	6	7	8	9	10	11	12	13	14	Measured terminal	Test limits		Unit
			Test no.	CLR	K1	J1	PRE 1	Q1	$\overline{Q}1$	GND	$\overline{Q}2$	Q2	PRE 2	J2	K2	CLK	V_{CC}		Min	Max	
1	I_{IH1}	3010	33	GND	2.7 V	GND	GND			GND						GND	5.5 V	K1		50	µA
T_C = +25°C		"	34	"						"			GND	GND	2.7 V	"	"	K2		"	"
		"	35	"	GND	2.7 V	GND			"						"	"	J1		"	"
		"	36	"						"			GND	2.7 V	GND	"	"	J2		"	"
	I_{IH3}	"	37	"	GND	GND	2.7 V			"						"	"	PRE 1		100	"
		"	38	"						"			2.7 V	GND	GND	"	"	PRE 2		100	"
	I_{IH2}	"	39	2.7 V	GND	GND	GND			"			GND	"	"	"	"	CLR		200	"
	I_{IH4}	"	40	GND	GND	GND	GND			"			GND	"	"	2.7 V	"	CLK		200	"
	I_{IH5}	"	41	GND	5.5 V	GND	GND			"						GND	"	K1		1.0	mA
		"	42	"						"			GND	GND	5.5 V	"	"	K2		"	"
		"	43	"	GND	5.5 V	GND			"						"	"	J1		"	"
		"	44	"						"			GND	5.5 V	GND	"	"	J2		"	"
		"	45	"	GND	GND	5.5 V			"						"	"	PRE 1		"	"
		"	46	"						"			5.5 V	GND	GND	"	"	PRE 2		"	"
		"	47	5.5 V	GND	GND	GND			"			GND	"	"	"	"	CLR		"	"
		"	48	GND	GND	GND	GND			"			GND	"	"	5.5 V	"	CLK		"	"
	I_{OS}	3011	49	5.5 V			GND	GND		"							"	Q1	-40	-100	"
		"	50	5.5 V						"		GND	GND				"	Q2	"	2/	"
		"	51	GND			5.5 V		GND	"							"	$\overline{Q}1$	"	"	"
		"	52	GND						"	GND		5.5 V				"	$\overline{Q}2$	"	"	"
	I_{CC}	3005	53	5.5 V						"						GND	"	V_{CC}		50	"
		3005	54	GND			5.5 V			"			5.5 V			GND	"	V_{CC}			"
	I_{CEX}		55	5.5 V	GND	5.5 V	5.5 V	5.5 V		"		GND				C	"	Q1		250	µA
			56	"						"		5.5 V	5.5 V	5.5 V	GND	"	"	Q2	50	"	"
			57	"	5.5 V	GND	5.5 V		5.5 V	"						"	"	$\overline{Q}1$			"
			58	"						"	5.5 V		5.5 V	GND	5.5 V	"	"	$\overline{Q}2$			"
2	Same tests, terminal conditions, and limits as for subgroup 1, except T_C = +125°C and V_{IC} tests are omitted. V_{OL} (max) = 0.45 V, V_{IL} = 0.7 V.																		"		
3	Same tests, terminal conditions, and limits as for subgroup 1, except T_C = -55°C and V_{IC} tests are omitted.																		"		

See footnotes at end of device type 04.

TABLE III. Group A inspection for device type 04 - Continued.
Terminal conditions (pins not designated may be high ≥ 2.0 V, low ≤ 0.8 V, or open).

Subgroup	Symbol	MIL-STD-883 method	Cases A, B,C,D	1	2	3	4	5	6	7	8	9	10	11	12	13	14	Measured terminal	Test limits		Unit
			Test no.	CLR	K1	J1	PRE 1	Q1	$\overline{Q}1$	GND	$\overline{Q}2$	Q2	PRE 2	J2	K2	CLK	V_{CC}		Min	Max	
7 3/ 4/			59	B	B	A	A	L	H	GND	H	L	A	A	B	A	4.5 V	All	H or L 5/		V
T_C = +25°C			60	"	"	"	"	"	"	"	"	"	"	"	"	B	"	outputs	as shown		"
			61	"	"	"	"	"	"	"	"	"	"	"	"	A	"	"	"		"
			62	A	"	"	"	"	"	"	L	H	B	B	"	A	"	"	"		"
			63	"	"	"	"	H	L	"	"	"	"	"	"	B	"	"	"		"
			64	"	"	"	"	"	"	"	"	"	"	"	"	A	"	"	"		"
			65	"	"	B	"	"	"	"	"	"	"	"	"	A	"	"	"		"
			66	"	"	"	"	"	"	"	"	"	"	"	"	B	"	"	"		"
			67	"	"	"	"	"	"	"	"	"	"	"	"	A	"	"	"		"
			68	"	A	"	"	"	"	"	"	"	"	"	"	A	"	"	"		"
			69	"	"	"	"	L	H	"	"	"	"	"	"	B	"	"	"		"
			70	"	"	"	"	L	H	"	"	"	"	"	"	A	"	"	"		"
			71	"	"	"	B	H	L	"	"	"	"	"	"	A	"	"	"		"
			72	"	"	"	B	H	L	"	"	"	"	"	"	B	"	"	"		"
			73	B	B	"	A	L	H	"	H	L	A	A	"	A	"	"	"		"
			74	A	"	"	B	H	L	"	H	L	"	"	"	A	"	"	"		"
			75	"	"	"	"	"	"	"	L	H	"	"	"	B	"	"	"		"
			76	"	"	"	"	"	"	"	"	"	"	"	"	A	"	"	"		"
			77	"	"	"	"	"	"	"	"	"	"	B	"	A	"	"	"		"
			78	"	"	"	"	"	"	"	"	"	"	"	"	B	"	"	"		"
			79	"	"	"	"	"	"	"	"	"	"	"	"	A	"	"	"		"
			80	"	"	"	"	"	"	"	"	"	"	"	A	A	"	"	"		"
			81	"	"	"	"	"	"	"	H	L	"	"	"	B	"	"	"		"
			82	"	"	"	"	"	"	"	H	L	"	"	"	A	"	"	"		"
			83	A	B	B	B	H	L	"	L	H	B	B	A	A	"	"	"		"
			84	A	B	B	"	"	L	"	L	"	"	B	"	B	"	"	"		"
			85	B	A	A	"	"	H	"	H	"	"	A	"	A	"	"	"		"
			86	B	B	B	A	L	"	"	"	L	A	B	B	"	"	"	"		"
			87	A	"	"	"	"	"	"	"	"	"	"	"	"	"	"	"		"
			88	"	"	"	"	"	"	"	"	"	"	"	"	B	"	"	"		"
			89	"	A	A	"	"	"	"	"	"	"	A	A	B	"	"	"		"

See footnotes at end of device type 04.

TABLE III. Group A inspection for device type 04 - Continued.
Terminal conditions (pins not designated may be high ≥ 2.0 V, low ≤ 0.8 V, or open).

Subgroup	Symbol	MIL-STD-883 method	Cases A, B,C,D	1	2	3	4	5	6	7	8	9	10	11	12	13	14	Measured terminal	Test limits		Unit
			Test no.	CLR	K1	J1	PRE 1	Q1	$\overline{Q}1$	GND	$\overline{Q}2$	Q2	PRE 2	J2	K2	CLK	V_{CC}		Min	Max	
7 3/ 4/			90	A	A	A	A	L	H	GND	H	L	A	A	A	A	4.5 V	All	H or L 5/		V
T_C = +25°C			91	"	"	"	"	H	L	"	L	H	"	"	"	B	"	outputs	as shown		"
			92	"	B	B	"	"	"	"	"	"	"	B	B	B	"	"	"		"
			93	"	"	"	"	"	"	"	"	"	"	"	"	A	"	"	"		"
			94	"	"	"	"	"	"	"	"	"	"	"	"	B	"	"	"		"
			95	"	A	A	"	"	"	"	"	"	"	A	A	B	"	"	"		"
			96	"	"	"	"	"	"	"	"	"	"	"	"	A	"	"	"		"
			97	"	"	"	"	L	H	"	H	L	"	"	"	B	"	"	"		"
8 3/ 4/	Same tests, terminal conditions and limits as for subgroup 7, except T_C = +125°C and -55°C.																				
9	f_{MAX}	Fig. 7	98	2.7 V	2.7 V	2.7 V	2.7 V	OUT		GND						IN (A)	5.0 V	Q1	80		MHz
T_C = +25°C	6/	"	99	"						"		OUT	2.7 V	2.7 V	2.7 V	"	"	Q2	"		"
		"	100	"	2.7 V	2.7 V	2.7 V		OUT	"						"	"	$\overline{Q}1$	"		"
		"	101	"						"	OUT		2.7 V	2.7 V	2.7 V	"	"	$\overline{Q}2$	"		"
	t_{PLH1}	"	102	IN (B)	2.7 V	2.7 V	IN (C)	OUT		"						2.7 V	"	PRE 1 to Q1	2.0	9.0	ns
		"	103	IN (B)						"		OUT	IN (C)	2.7 V	2.7 V	"	"	PRE 2 to Q2	"	"	"
		"	104	IN (C)	2.7 V	2.7 V	IN (B)		OUT	"						"	"	CLR to $\overline{Q}1$	"	"	"
		"	105	IN (C)						"	OUT		IN (B)	2.7 V	2.7 V	"	"	CLR to $\overline{Q}2$	"	"	"
	t_{PLH2}	Fig. 8	106	E	2.7 V	2.7 V	2.7 V		OUT	"						IN (A)	"	CLK to $\overline{Q}1$	"	"	"
		"	107	E						"	OUT		2.7 V	2.7 V	2.7 V	"	"	CLK to $\overline{Q}2$	"	"	"
		"	108	2.7 V	2.7 V	2.7 V	E	OUT		"						"	"	CLK to Q1	"	"	"
		"	109	2.7 V						"		OUT	E	2.7 V	2.7 V	"	"	CLK to Q2	"	"	"
	t_{PHL3}	Fig. 7	110	IN (B)	2.7 V	2.7 V	IN (C)		OUT	"						2.7 V	"	PRE 1 to $\overline{Q}1$	"	"	"
		"	111	IN (B)						"	OUT		IN (C)	2.7 V	2.7 V	"	"	PRE 2 to $\overline{Q}2$	"	"	"
		"	112	IN (C)	2.7 V	2.7 V	IN (B)	OUT		"						"	"	CLR to Q1	"	"	"
		"	113	IN (C)						"		OUT	IN (B)	2.7 V	2.7 V	"	"	CLR to Q2	"	"	"
	t_{PHL2}	Fig. 8	114	E	2.7 V	2.7 V	2.7 V		OUT	"						IN (A)	"	CLK to $\overline{Q}1$	"	"	"
		"	115	E						"	OUT		2.7 V	2.7 V	2.7 V	"	"	CLK to $\overline{Q}2$	"	"	"
		"	116	2.7 V	2.7 V	2.7 V	E	OUT		"						"	"	CLK to Q1	"	"	"
		"	117	"						"		OUT	E	2.7 V	2.7 V	"	"	CLK to Q2	"	"	"
	t_{SETUP}	Fig. 9	118	"	GND	IN (D)	E	OUT		"						"	"	Q1	7/		
	(L)	"	119	"						"		OUT	E	IN (D)	GND	"	"	Q2	"		
		"	120	E	IN (D)	GND	2.7 V		OUT	"						"	"	$\overline{Q}1$	"		
		"	121	E						"	OUT		2.7 V	GND	IN (D)	"	"	$\overline{Q}2$	"		

See footnotes at end of device type 04.

TABLE III. Group A inspection for device type 04 - Continued.
Terminal conditions (pins not designated may be high ≥ 2.0 V, low ≤ 0.8 V, or open).

Subgroup	Symbol	MIL-STD-883 method	Cases A, B,C,D	1	2	3	4	5	6	7	8	9	10	11	12	13	14	Measured terminal	Test limits		Unit
			Test no.	CLR	K1	J1	PRE 1	Q1	$\overline{Q1}$	GND	$\overline{Q2}$	Q2	PRE 2	J2	K2	CLK	V_{CC}		Min	Max	
9	t_{SETUP}	Fig. 9	122	E	GND	IN (E)	2.7 V	OUT		GND						IN (A)	5.0 V	Q1	7/		
T_C = +25°C	(H)	"	123	E						"		OUT	2.7 V	IN (E)	GND	"	"	Q2	"		
		"	124	2.7 V	IN (E)	GND	E			"						"	"	$\overline{Q1}$	"		
		"	125	"						"	OUT		E	GND	IN (E)	"	"	$\overline{Q2}$	"		
	t_{HOLD}	"	126	"	GND	IN (F)	E	OUT		"						"	"	Q1	"		
	(L)	"	127	"						"		OUT	E	IN (F)	GND	"	"	Q2	"		
		"	128	E	IN (F)	GND	2.7 V		OUT	"						"	"	$\overline{Q1}$	"		
		"	129	"						"	OUT		2.7 V	GND	IN (F)	"	"	$\overline{Q2}$	"		
	t_{HOLD}	"	130	"	GND	IN (G)	2.7 V	OUT		"						"	"	$\overline{Q1}$	"		
	(H)	"	131	"						"		OUT	2.7 V	IN (G)	GND	"	"	$\overline{Q2}$	"		
		"	132	2.7 V	IN (G)	GND	E			"						"	"	Q1	"		
		"	133	2.7 V						"	OUT		E	GND	IN (G)	"	"	Q2	"		
10	f_{MAX}	Fig. 7	134-137	OUT															60		MHz
T_C = +125°C	6/																				
	t_{PLH1}	Fig. 6	138-141																2.0	11.0	ns
	t_{PLH2}	Fig. 7	142-145	Same tests and terminal conditions as for subgroup 9, except T_C = +125°C and limits are as shown.															"	"	"
	t_{PHL3}	Fig. 6	146-149																"	"	"

See footnotes at end of device type 04.

TABLE III. Group A inspection for device type 04 - Continued.
Terminal conditions (pins not designated may be high ≥ 2.0 V, low ≤ 0.8 V, or open).

Subgroup	Symbol	MIL-STD-883 method	Cases A, B,C,D	1	2	3	4	5	6	7	8	9	10	11	12	13	14	Measured terminal	Test limits		Unit
			Test no.	CLR	K1	J1	PRE 1	Q1	$\overline{Q}1$	GND	$\overline{Q}2$	Q2	PRE 2	J2	K2	CLK	V_{CC}		Min	Max	
10 T_C = +125°C	t_{PHL2}	Fig. 7	150-153	Same tests and terminal conditions as for subgroup 9, except T_C = +125°C and limits are as shown.															2.0	11.0	ns
	t_{SET}	Fig. 8	154-157																7/		
	t_{SET}	"	158-161																"		
(L)	t_{HOLD}	"	162-165																"		
(H)	t_{HOLD}	"	166-169																"		
11 (L) (H)	Same tests, terminal conditions, and limits as for subgroup 10, except T_C = -55°C.																				

1/ C = Normal clock pulse.
D = Momentary connection: 5.0 V to momentary GND to 5.0 V occurs before measurement is made (for subgroups 9, 10, and 11, D occurs prior to other input pulses).
E = Normal input conditioning is 5.0 V, however, momentary logic "0" may be applied to the input for synchronizing test equipment and for preconditioning the device.

2/ For circuit B, $I_{OS(max)}$ is –110 mA.

3/ Only a summary of attributes data is required.

4/ Inputs: A = 2.4 V minimum, B = 0.4 V.

5/ Outputs: H ≥ 1.5 V, L ≤ 1.5 V.

6/ f_{MAX}, minimum limit specified is the frequency of the input pulse. The output frequency shall be one-half of the input frequency.

7/ Monitor output to verify functionally with $t_{(SETUP)}$ and $t_{(HOLD)}$ conditions as shown on figure 8.

TABLE III. Group A inspection for device type 05.
Terminal conditions (pins not designated may be high ≥ 2.0 V, low ≤ 0.8 V, or open).

Subgroup	Symbol	MIL-STD-883 method	Cases X, 2 1/	2	3	4	5	7	8	9	10	12	13	14	15	17	18	19	20	Measured terminal	Test limits Min	Test limits Max	Unit
			Cases E, F	1	2	3	4	5	6	7	8	9	10	11	12	13	14	15	16				
			Test no.	CLR	Q1	D1	D2	Q2	D3	Q3	GND	CLK	Q4	D4	Q5	D5	D6	Q6	V_{CC}				
1	V_{OH}	3006	1	D 2/	-1 mA	2.0 V					GND	C							4.5 V	Q1	2.5		V
T_C= +25°C		"	2	"			2.0 V	-1 mA			"	"							"	Q2	"		"
		"	3	"					2.0 V	-1 mA	"	"							"	Q3	"		"
		"	4	"							"	"	-1 mA	2.0 V					"	Q4	"		"
		"	5	"							"	"			-1 mA	2.0 V			"	Q5	"		"
		"	6	"							"	"					2.0 V	-1 mA	"	Q6	"		"
	V_{OL}	3007	7	2.0 V	20 mA	0.8 V					"	"							"	Q1			"
		"	8	"			0.8 V	20 mA			"	"							"	Q2			"
		"	9	"					0.8 V	20 mA	"	"							"	Q3	0.5	"	"
		"	10	"							"	"	20 mA	0.8 V					"	Q4	"	"	"
		"	11	"							"	"			20 mA	0.8 V			"	Q5			"
		"	12	"							"	"					0.8 V	20 mA	"	Q6			"
	V_{IC}		13	-18 mA							"								"	CLR	"	-1.2	"
			14			-18 mA					"								"	D1	"	"	"
			15				-18 mA				"								"	D2			"
			16						-18 mA		"								"	D3			"
			17								"	-18 mA							"	CLK	"	"	"
			18								"			-18 mA					"	D4	"	"	"
			19								"					-18 mA			"	D5		"	"
			20								"						-18 mA		"	D6		"	"
	I_{IL1}	3009	21	0.5 V							"								5.5 V	CLR	-1.0	-2.0	mA
		"	22			0.5 V					"								"	D1	"	"	"
		"	23				0.5 V				"								"	D2	"	"	"
		"	24						0.5 V		"								"	D3	"	"	"
		"	25								"	0.5 V							"	CLK	"	"	"
		"	26								"			0.5 V					"	D4	"	"	"
		"	27								"					0.5 V			"	D5	"	"	"
		"	28								"						0.5 V		"	D6	"	"	"
	I_{IH1}	3010	29	2.7 V							"								"	CLR		50	µA
		"	30			2.7 V					"								"	D1		"	"
		"	31				2.7 V				"								"	D2			"
		"	32						2.7 V		"								"	D3			"
		"	33								"	2.7 V							"	CLK	"	"	"
		"	34								"			2.7 V					"	D4	"	"	"
		"	35								"					2.7 V			"	D5		"	"
		"	36								"						2.7 V		"	D6		"	"

See footnotes at end of device type 05

TABLE III. Group A inspection for device type 05.
Terminal conditions (pins not designated may be high ≥ 2.0 V, low ≤ 0.8 V, or open).

Subgroup	Symbol	MIL-STD-883 method	Cases X, 2 1/	2	3	4	5	7	8	9	10	12	13	14	15	17	18	19	20	Measured terminal	Test limits Min	Test limits Max	Unit
			Cases E, F	1	2	3	4	5	6	7	8	9	10	11	12	13	14	15	16				
			Test no.	CLR	Q1	D1	D2	Q2	D3	Q3	GND	CLK	Q4	D4	Q5	D5	D6	Q6	V_{CC}				
1	I_{IH5}	3010	37	5.5 V							GND								5.5 V	CLR		1.0	mA
T_C = +25°C		"	38			5.5 V					"								"	D1		"	"
		"	39				5.5 V				"								"	D2			"
		"	40						5.5 V		"								"	D3			"
		"	41								"	5.5 V							"	CLK	"	"	"
		"	42								"			5.5 V					"	D4	"	"	"
		"	43								"					5.5 V			"	D5		"	"
		"	44								"						5.5 V		"	D6		"	"
	I_{OS} 2/	3011	45	5.5 V	GND	5.5 V					"	C							"	Q1	-40	-100	"
		"	46	"			5.5 V	GND			"	"							"	Q2	"	"	"
		"	47	"					5.5 V	GND	"	"							"	Q3	"	"	"
		"	48	"							"	"	GND	5.5 V					"	Q4	"	"	"
3		"	49	"							"	"			GND	5.5 V			"	Q5	"	"	"
		"	50	"							"	"					5.5 V	GND	"	Q6	"	"	"
	I_{CC}	3005	51	5.5 V		5.5 V	5.5 V		5.5 V		"	D		5.5 V		5.5 V	5.5 V		"	V_{CC}		144	mA
	I_{CEX}		52	D	5.5 V	5.5 V					"	D							"	Q1			µA
			53	"			5.5 V	5.5 V			"	"							"	Q2			"
			54	"					5.5 V	5.5 V	"	"							"	Q3	250	"	"
			55	"							"	"	5.5 V	5.5 V					"	Q4	"	"	"
			56	"							"	"			5.5 V	5.5 V			"	Q5			"
			57	"							"	"					5.5 V	5.5 V	"	Q6			"
2	Same tests, terminal conditions, and limits as for subgroup 1, except T_C = +125°C and V_{IC} tests are omitted. V_{OL} (max) = 0.45 V, V_{IL} = 0.7 V.																				"		
3	Same tests, terminal conditions, and limits as for subgroup 1, except T_C = -55°C and V_{IC} tests are omitted.																				"		
7 4/ 5/			58	B	L	A	A	L	A	L	GND	A	L	A	L	A	A	L	4.5 V	All	H or L 6/		V
T_C = +25°C			59	"	"	"	"	"	"	"	"	B	"	"	"	"	"	"	"	outputs	as shown		"
			60	"	"	"	"	"	"	"	"	A	"	"	"	"	"	"	"	"	"		"
			61	A	"	"	"	"	"	"	"	A	"	"	"	"	"	"	"	"	"		"
			62	"	"	"	"	"	"	"	"	B	"	"	"	"	"	"	"	"	"		"
			63	"	H	"	"	H	"	H	"	A	H	"	H	"	"	H	"	"	"		"
			64	"	H	B	B	H	B	H	"	A	H	B	H	B	B	H	"	"	"		"

See footnotes at end of device type 05

TABLE III. Group A inspection for device type 05 - Continued.
Terminal conditions (pins not designated may be high ≥ 2.0 V, low ≤ 0.8 V, or open).

Subgroup	Symbol	MIL-STD-883 method	Cases X, 2 1/	2	3	4	5	7	8	9	10	12	13	14	15	17	18	19	20	Measured terminal	Test limits Min	Test limits Max	Unit
			Cases E, F	1	2	3	4	5	6	7	8	9	10	11	12	13	14	15	16				
			Test no.	CLR	Q1	D1	D2	Q2	D3	Q3	GND	CLK	Q4	D4	Q5	D5	D6	Q6	V_{CC}				
7 4/ 5/			65	A	H	B	B	H	B	H	GND	B	H	B	H	B	B	H	4.5 V	All	H or L 6/		V
T_C = +25°C			66	"	L	B	B	L	B	L	"	A	L	B	L	B	B	L	"	outputs	as shown		"
			67	"	L	A	A	L	A	L	"	B	L	A	L	A	A	L	"	"	"		"
			68	"	H	"	"	H	"	H	"	A	H	"	H	"	"	H	"	"	"		"
			69	"	H	"	"	H	"	H	"	B	H	"	H	"	"	H	"	"	"		"
			70	B	L	"	"	L	"	L	"	B	L	"	L	"	"	L	"	"	"		"
8 4/ 5/	Same tests, terminal conditions and limits as for subgroup 7, except T_C = +125°C and -55°C.																						
9	f_{MAX}	Fig. 14	71	2.7 V	OUT	IN (B)					GND	IN (A)							5.0 V	Q1	75		MHz
T_C = +25°C	7/	"	72	"			IN (B)	OUT			"	"							"	Q2	"		"
		"	73	"					IN (B)	OUT	"	"							"	Q3	"		"
		"	74	"							"	"	OUT	IN (B)					"	Q4	"		"
		"	75	"							"	"			OUT	IN (B)			"	Q5	"		"
		"	76	"							"	"					IN (B)	OUT	"	Q6	"		"
	t_{PLH1}	Fig. 15	77	"	OUT	IN (E)					"	IN (C)							"	CLK to Q1	2.0	14.0	ns
		"	78	"			IN (E)	OUT			"	"							"	CLK to Q2	"	"	"
		"	79	"					IN (E)	OUT	"	"							"	CLK to Q3	"	"	"
		"	80	"							"	"	OUT	IN (E)					"	CLK to Q4	"	"	"
		"	81	"							"	"			OUT	IN (E)			"	CLK to Q5	"	"	"
		"	82	"							"	"					IN (E)	OUT	"	CLK to Q6	"	"	"
	t_{PLH2}	Fig. 13	83	IN (F)	OUT	2.7 V					"	IN (G)							"	CLK to Q1	"	"	"
		"	84	"			2.7 V	OUT			"	"							"	CLK to Q2	"	"	"
		"	85	"					2.7 V	OUT	"	"							"	CLK to Q3	"	"	"
		"	86	"							"	"	OUT	2.7 V					"	CLK to Q4	"	"	"
		"	87	"							"	"			OUT	2.7 V			"	CLK to Q5	"	"	"
		"	88	"							"	"					2.7 V	OUT	"	CLK to Q6	"	"	"

See footnotes at end of device type 05.

TABLE III. Group A inspection for device type 05 - Continued.
Terminal conditions (pins not designated may be high ≥ 2.0 V, low ≤ 0.8 V, or open).

Subgroup	Symbol	MIL-STD-883 method	Cases X, 2 1/	2	3	4	5	7	8	9	10	12	13	14	15	17	18	19	20	Measured terminal	Test limits Min	Test limits Max	Unit
			Cases E, F	1	2	3	4	5	6	7	8	9	10	11	12	13	14	15	16				
			Test no.	CLR	Q1	D1	D2	Q2	D3	Q3	GND	CLK	Q4	D4	Q5	D5	D6	Q6	V_{CC}				
9	t_{PHL1}	Fig. 15	89	2.7 V	OUT	IN (D)					GND	IN (C)							5.0 V	CLK to Q1	2.0	19.0	ns
T_C = +25°C		"	90	"			IN (D)	OUT			"	"							"	CLK to Q2	"	"	"
		"	91	"					IN (D)	OUT	"	"							"	CLK to Q3	"	"	"
		"	92	"							"	"	OUT	IN (D)					"	CLK to Q4	"	"	"
		"	93	"							"	"			OUT	IN (D)			"	CLK to Q5	"	"	"
		"	94	"							"	"					IN (D)	OUT	"	CLK to Q6	"	"	"
	t_{PHL2}	Fig. 13	95	IN (F)	OUT	2.7 V					"	IN (G)							"	CLR to Q1	"	24.0	"
		"	96	"			2.7 V	OUT			"	"							"	CLR to Q2	"	"	"
		"	97	"					2.7 V	OUT	"	"							"	CLR to Q3	"	"	"
		"	98	"							"	"	OUT	2.7 V					"	CLR to Q4	"	"	"
		"	99	"							"	"			OUT	2.7 V			"	CLR to Q5	"	"	"
		"	100	"							"	"					2.7 V	OUT	"	CLR to Q6	"	"	"
10	f_{MAX} 7/	101-106		Same tests and terminal conditions as for subgroup 9, except T_C = +125°C and limits are as shown.																	55		MHz
T_C= +125°C	t_{PLH1}		107-112																		2.0	17.0	ns
	t_{PLH2}		113-118																		"	17.0	"
	t_{PHL1}		119-124																		"	23.0	"
	t_{PHL2}		125-130																		"	29.0	"
11	Same tests, terminal conditions, and limits as for subgroup 10, except T_C = -55°C.																						

1/ Cases X and 2 terminals not designated are NC.
_/ C = Normal clock pulse.
D = Momentary connection: 5.0 V to momentary GND to 5.0 V, occurs before measurement is made.
_/ At the manufacturers' option, I_{OS} tests 45 through 50, the following alternate procedure may be used: Apply 2.75 V at test 45 Q1, test 46 Q2, test 47 Q3, test 48 Q4, test 49 Q5, and test 50 Q6, using min/max limits of -20/-50 mA.
_/ Only a summary of attributes data is required.
_/ Inputs: A = 2.4 V minimum, B = 0.4 V.
_/ Outputs: $_H$ ≥ 1.5 V, L ≤ 1.5 V.
7/ f_{MAX}, minimum limit specified is the frequency of the input pulse. The output frequency shall be one-half of the input frequency.

TABLE III. Group A inspection for device type 06.
Terminal conditions (pins not designated may be high ≥ 2.0 V, low ≤ 0.8 V, or open).

Subgroup	Symbol	MIL-STD-883 method	Cases E, F	1	2	3	4	5	6	7	8	9	10	11	12	13	14	15	16	Measured terminal	Test limits		Unit
			Test no.	CLR	Q1	$\overline{Q1}$	D1	D2	$\overline{Q2}$	Q2	GND	CLK	Q3	$\overline{Q3}$	D3	D4	$\overline{Q4}$	Q4	V_{CC}		Min	Max	
1	V_{OH}	3006	1	D 1/	-1 mA		2.0 V				GND	C							4.5 V	Q1	2.5		V
T_C = +25°C		"	2	"		-1 mA	0.8 V				"	"							"	$\overline{Q1}$	"		"
		"	3	"				2.0 V		-1 mA	"	"							"	Q2	"		"
		"	4	"				0.8 V	-1 mA		"	"							"	$\overline{Q2}$	"		"
		"	5	"							"	"	-1 mA		2.0 V				"	Q3	"		"
		"	6	"							"	"		-1 mA	0.8 V				"	$\overline{Q3}$	"		"
		"	7	"							"	"				2.0 V		-1 mA	"	Q4	"		"
		"	8	"							"	"				0.8 V	-1 mA		"	$\overline{Q4}$	"		"
		"	9	0.8 V		-1 mA					"								"	$\overline{Q1}$	"		"
		"	10	"					-1 mA		"								"	$\overline{Q2}$	"		"
		"	11	"							"			-1 mA					"	$\overline{Q3}$	"		"
		"	12	"							"						-1 mA		"	$\overline{Q4}$	"		"
	V_{OL}	3007	13	D		20 mA	2.0 V				"	C							"	$\overline{Q1}$		0.5	"
		"	14	"	20 mA		0.8 V				"	"							"	Q1			"
		"	15	"				2.0 V	20 mA		"	"							"	$\overline{Q2}$		"	"
		"	16	"				0.8 V		20 mA	"	"							"	Q2	"	"	"
		"	17	"							"	"		20 mA	2.0 V				"	$\overline{Q3}$		"	"
		"	18	"							"	"	20 mA		0.8 V				"	Q3			"
		"	19	"							"	"				2.0 V	20 mA		"	$\overline{Q4}$		"	"
		"	20	"							"	"				0.8 V		20 mA	"	Q4	"		"
		"	21	0.8 V	20 mA						"								"	Q1			"
		"	22	"						20 mA	"								"	Q2	"		"
		"	23	"							"		20 mA						"	Q3	"		"
		"	24	"							"							20 mA	"	Q4	"		"
	V_{IC}		25	-18 mA							"								"	CLR	"	-1.2	"
			26				-18 mA				"								"	D1	"	"	"
			27					-18 mA			"								"	D2		"	"
			28								"	-18 mA							"	CLK		"	"
			29								"				-18 mA				"	D3		"	"
			30								"					-18 mA			"	D4		"	"
	I_{IL1}	3009	31	0.5 V							"								5.5 V	CLR	-1.0	-2.0	mA
		"	32				0.5 V				"								"	D1	"	"	"
		"	33					0.5 V			"								"	D2	"	"	"
		"	34								"	0.5 V							"	CLK	"	"	"
		"	35								"				0.5 V				"	D3	"	"	"
		"	36								"					0.5 V			"	D4	"	"	"

See footnotes at end of device type 06.

TABLE III. Group A inspection for device type 06.
Terminal conditions (pins not designated may be high ≥ 2.0 V, low ≤ 0.8 V, or open).

Subgroup	Symbol	MIL-STD-883 method	Cases E, F	1	2	3	4	5	6	7	8	9	10	11	12	13	14	15	16	Measured terminal	Test limits		Unit
			Test no.	CLR	Q1	$\overline{Q1}$	D1	D2	$\overline{Q2}$	Q2	GND	CLK	Q3	$\overline{Q3}$	D3	D4	$\overline{Q4}$	Q4	V_{CC}		Min	Max	
1	I_{IH1}	3010	37	2.7 V							GND								5.5 V	CLR		50	µA
T_C = +25°C		"	38				2.7 V				"								"	D1		"	"
		"	39					2.7 V			"								"	D2		"	"
		"	40								"	2.7 V							"	CLK		"	"
		"	41								"				2.7 V				"	D3		"	"
		"	42								"					2.7 V			"	D4		"	"
	I_{IH5}	"	43	5.5 V							"								"	CLR		1.0	mA
		"	44				5.5 V				"								"	D1		"	"
		"	45					5.5 V			"								"	D2		"	"
		"	46								"	5.5 V							"	CLK		"	"
		"	47								"				5.5 V				"	D3		"	"
		"	48								"					5.5 V			"	D4		"	"
	I_{OS}	3011	49	5.5 V	GND		5.5 V				"	C							"	Q1	-40	-100	"
		"	50	"				5.5 V		GND	"	"							"	Q2	"	2/	"
		"	51	"							"	"	GND		5.5 V				"	Q3	"	"	"
		"	52	"							"	"				5.5 V		GND	"	Q4	"	"	"
		"	53	"		GND	GND				"	"							"	$\overline{Q1}$	"	"	"
		"	54	"				GND	GND		"	"							"	$\overline{Q2}$	"	"	"
		"	55	"							"	"		GND	GND				"	$\overline{Q3}$	"	"	"
		"	56	"							"	"				GND	GND		"	$\overline{Q4}$	"	"	"
	I_{CC}	3005	57	"			5.5 V	5.5 V			"	D			5.5 V	5.5 V			"	V_{CC}		96	"
	I_{CEX}		58	D	5.5 V		5.5 V				"	D							"	Q1		250	µA
			59	"		5.5 V	GND				"	"							"	$\overline{Q1}$			"
			60	"				5.5 V		5.5 V	"	"							"	Q2		"	"
			61	"				GND	5.5 V		"	"							"	$\overline{Q2}$	"		"
			62	"							"	"	5.5 V		5.5 V				"	Q3		"	"
			63	"							"	"		5.5 V	GND				"	$\overline{Q3}$	"		"
			64	"							"	"				5.5 V		5.5 V	"	Q4		"	"
			65	"							"	"				GND	5.5 V		"	$\overline{Q4}$	"		"
2	Same tests, terminal conditions, and limits as for subgroup 1, except T_C = +125°C and V_{IC} tests are omitted. V_{OL} (max) = 0.45 V, V_{IL} = 0.7 V.																				"		
3	Same tests, terminal conditions, and limits as for subgroup 1, except T_C = -55°C and V_{IC} tests are omitted.																						

See footnotes at end of device type 06.

TABLE III. Group A inspection for device type 06 - Continued.
Terminal conditions (pins not designated may be high ≥ 2.0 V, low ≤ 0.8 V, or open).

Subgroup	Symbol	MIL-STD-883 method	Cases E, F	1	2	3	4	5	6	7	8	9	10	11	12	13	14	15	16	Measured terminal	Test limits		Unit
			Test no.	CLR	Q1	$\overline{Q1}$	D1	D2	$\overline{Q2}$	Q2	GND	CLK	Q3	$\overline{Q3}$	D3	D4	$\overline{Q4}$	Q4	V_{CC}		Min	Max	
7 3/ 4/ T_C = +25°C			66	B	L	H	A	A	H	L	GND	B	L	H	A	A	H	L	4.5 V	All outputs	H or L 5/ as shown		V
			67	"	"	"	"	"	"	"	"	A	"	"	"	"	"	"	"				"
			68	"	"	"	"	"	"	"	"	B	"	"	"	"	"	"	"	"	"		"
			69	A	"	"	"	"	"	"	"	B	"	"	"	"	"	"	"	"	"		"
			70	"	H	L	"	"	L	H	"	A	H	L	"	"	L	H	"	"	"		"
			71	"	"	"	"	"	"	"	"	B	"	"	"	"	"	"	"	"	"		"
			72	"	"	"	B	B	"	"	"	B	"	"	B	B	"	"	"	"	"		"
			3	"	L	H	"	"	H	L	"	A	L	H	"	"	H	L	"	"	"		"
			74	"	"	"	"	"	"	"	"	B	"	"	"	"	"	"	"	"	"		"
			75	"	"	"	A	A	"	"	"	B	"	"	A	A	"	"	"	"	"		"
			76	"	H	L	"	"	L	H	"	A	H	L	"	"	L	H	"	"	"		"
			77	"	H	L	"	"	L	H	"	B	H	L	"	"	L	H	"	"	"		"
			78	B	L	H	"	"	H	L	"	B	L	H	"	"	H	L	"	"	"		"
8 3/ 4/	Same tests, terminal conditions and limits as for subgroup 7, except T_C = +125°C and -55°C.																						
9 T_C = +25°C	f_{MAX} 6/	Fig. 14	79	2.7 V	OUT		IN (B)				GND	IN (A)							5.0 V	Q1	75		MHz
		"	80	"		OUT	IN (B)				"	"							"	$\overline{Q1}$	"		"
		"	81	"				IN (B)		OUT	"	"							"	Q2	"		"
		"	82	"				IN (B)	OUT		"	"							"	$\overline{Q2}$	"		"
		"	83	"							"	"	OUT		IN (B)				"	Q3	"		"
		"	84	"							"	"		OUT	IN (B)				"	$\overline{Q3}$	"		"
		"	85	"							"	"				IN (B)		OUT	"	Q4	"		"
		"	86	"							"	"				IN (B)	OUT		"	$\overline{Q4}$	"		"
	t_{PLH1}	Fig. 15	87	"	OUT		IN (E)				"	IN (C)							"	CLK to Q1	2.0	14.0	ns
		"	88	"		OUT	IN (D)				"	"							"	CLK to $\overline{Q1}$	"	"	"
		"	89	"				IN (E)		OUT	"	"							"	CLK to Q2	"	"	"
		"	90	"				IN (D)	OUT		"	"							"	CLK to $\overline{Q2}$	"	"	"
		"	91	"							"	"	OUT		IN (E)				"	CLK to Q3	"	"	"
		"	92	"							"	"		OUT	IN (D)				"	CLK to $\overline{Q3}$	"	"	"
		"	93	"							"	"				IN (E)		OUT	"	CLK to Q4	"	"	"
		"	94	"							"	"				IN (D)	OUT		"	CLK to $\overline{Q4}$	"	"	"

See footnotes at end of device type 06.

TABLE III. Group A inspection for device type 06 - Continued.
Terminal conditions (pins not designated may be high ≥ 2.0 V, low ≤ 0.8 V, or open).

Subgroup	Symbol	MIL-STD-883 method	Cases E, F	1	2	3	4	5	6	7	8	9	10	11	12	13	14	15	16	Measured terminal	Test limits		Unit
			Test no.	CLR	Q1	$\overline{Q}1$	D1	D2	$\overline{Q}2$	Q2	GND	CLK	Q3	$\overline{Q}3$	D3	D4	$\overline{Q}4$	Q4	V_{CC}		Min	Max	
9	t_{PLH2}	Fig. 13	95	IN (F)	OUT		2.7 V				GND	IN (G)							5.0 V	CLK to Q1	2.0	14.0	ns
T_C = +25°C		"	96	"				2.7 V		OUT	"	"							"	CLK to Q2	"	"	"
		"	97	"							"	"	OUT		2.7 V				"	CLK to Q3	"	"	"
		"	98	"							"	"				2.7 V		OUT	"	CLK to Q4	"	"	"
	t_{PLH3}	"	99	"		OUT	2.7 V				"	"							"	CLR to $\overline{Q}1$	"	16.0	"
		"	100	"				2.7 V	OUT		"	"							"	CLR to $\overline{Q}2$	"	"	"
		"	101	"							"	"		OUT	2.7 V				"	CLR to $\overline{Q}3$	"	"	"
		"	102	"							"	"				2.7 V	OUT		"	CLR to $\overline{Q}4$	"	"	"
	t_{PHL1}	Fig. 15	103	2.7 V	OUT		IN (D)				"	IN (C)							"	CLK to Q1	"	19.0	"
		"	104	"		OUT	IN (E)				"	"							"	CLK to $\overline{Q}1$	"	"	"
		"	105	"				IN (D)		OUT	"	"							"	CLK to Q2	"	"	"
		"	106	"				IN (E)	OUT		"	"							"	CLK to $\overline{Q}2$	"	"	"
		"	107	"							"	"	OUT		IN (D)				"	CLK to Q3	"	"	"
		"	108	"							"	"		OUT	IN (E)				"	CLK to $\overline{Q}3$	"	"	"
		"	109	"							"	"				IN (D)		OUT	"	CLK to Q4	"	"	"
		"	110	"							"	"				IN (E)	OUT		"	CLK to $\overline{Q}4$	"	"	"
	t_{PHL3}	Fig. 13	111	IN (F)		OUT	2.7 V				"	IN (G)							"	CLK to $\overline{Q}1$	"	"	"
		"	112	"				2.7 V	OUT		"	"							"	CLK to $\overline{Q}2$	"	"	"
		"	113	"							"	"		OUT	2.7 V				"	CLK to $\overline{Q}3$	"	"	"
		"	114	"							"	"				2.7 V	OUT		"	CLK to $\overline{Q}4$	"	"	"
	t_{PHL2}	"	115	"	OUT		2.7 V				"	IN (G)							"	CLR to Q1	"	24.0	"
		"	116	"				2.7 V		OUT	"	"							"	CLR to Q2	"	"	"
		"	117	"							"	"	OUT		2.7 V				"	CLR to Q3	"	"	"
		"	118	"							"	"				2.7 V		OUT	"	CLR to Q4	"	"	"
10	f_{MAX} 6/	Fig. 14	119-126	Same tests and terminal conditions as for subgroup 9, except T_C = +125°C and limits are as shown.																	55		MHz
T_C = +125°C	t_{PLH1}	Fig. 15	127-134																		2.0	17.0	ns
	t_{PLH2}	Fig. 13	135-138																		"	17.0	"
	t_{PLH3}	Fig. 13	139-142																		"	20.0	"

See footnotes at end of device type 06.

TABLE III. Group A inspection for device type 06 - Continued.
Terminal conditions (pins not designated may be high ≥ 2.0 V, low ≤ 0.8 V, or open).

Subgroup	Symbol	MIL-STD-883 method	Cases E, F	1	2	3	4	5	6	7	8	9	10	11	12	13	14	15	16	Measured terminal	Test limits		Unit
			Test no.	CLR	Q1	$\overline{Q}1$	D1	D2	$\overline{Q}2$	Q2	GND	CLK	Q3	$\overline{Q}3$	D3	D4	$\overline{Q}4$	Q4	V_{CC}		Min	Max	
10 T_C = +125°C	t_{PHL1}	Fig. 15	143-150	Same tests and terminal conditions as for subgroup 9, except T_C = +125°C and limits are as shown.																	2.0	23.0	ns
	t_{PHL3}	Fig. 13	151-154																		"	23.0	"
	t_{PHL2}	Fig. 13	155-158																		"	29.0	"
11	Same tests, terminal conditions, and limits as for subgroup 10, except T_C = -55°C.																						

_/ C = Normal clock pulse.
D = Momentary connection: 5.0 V to momentary GND to 5.0 V occurs before measurement is made.
_/ For circuit B, $I_{OS(max)}$ is -110 mA.
_/ Only a summary of attributes data is required.
_/ Inputs: A = 2.4 V minimum, B = 0.4 V.
_/ Outputs: H ≥ 1.5 V, L ≤ 1.5 V.
6/ f_{MAX}, minimum limit specified is the frequency of the input pulse. The output frequency shall be one-half of the input frequency.

5. PACKAGING

5.1 Packaging requirements. For acquisition purposes, the packaging requirements shall be as specified in the contract or order (see 6.2). When packaging of materiel is to be performed by DoD or in-house contractor personnel, these personnel need to contact the responsible packaging activity to ascertain packaging requirements. Packaging requirements are maintained by the Inventory Control Point's packaging activity within the Military Service or Defense Agency, or within the military service's system command. Packaging data retrieval is available from the managing Military Department's or Defense Agency's automated packaging files, CD-ROM products, or by contacting the responsible packaging activity.

6. NOTES

(This section contains information of a general or explanatory nature that may be helpful, but it is not mandatory)

6.1 Intended use. Microcircuits conforming to this specification are intended for logistic support of existing equipment.

6.2 Acquisition requirements. Acquisition documents should specify the following:

a. Title, number, and date of the specification.
b. PIN and compliance identifier, if applicable (see 1.2).
c. Requirements for delivery of one copy of the conformance inspection data pertinent to the device inspection lot to be supplied with each shipment by the device manufacturer, if applicable.
d. Requirement for certificate of compliance, if applicable.
e. Requirements for notification of change of product or process to acquiring activity in addition to notification to the qualifying activity, if applicable.
f. Requirements for failure analysis (including required test condition of method 5003), corrective action and reporting of results, if applicable.
g. Requirements for product assurance options.
h. Requirements for carriers, special lead lengths or lead forming, if applicable. These requirements shall not affect the part number. Unless otherwise specified, these requirements will not apply to direct purchase by or direct shipment to the Government.
i. Requirements for "JAN" marking.
j. Packaging requirements (see 5.1).

6.3 Qualification. With respect to products requiring qualification, awards will be made only for products which are, at the time of award of contract, qualified for inclusion in Qualified Manufacturers List QML-38535 whether or not such products have actually been so listed by that date. The attention of the contractors is called to these requirements, and manufacturers are urged to arrange to have the products that they propose to offer to the Federal Government tested for qualification in order that they may be eligible to be awarded contracts or purchase orders for the products covered by this specification. Information pertaining to qualification of products may be obtained from DSCC-VQ, 3990 E. Broad Street, Columbus, Ohio 43123-1199.

6.4 Superseding information. The requirements of MIL-M-38510 have been superseded to take advantage of the available Qualified Manufacturer Listing (QML) system provided by MIL-PRF-38535. Previous references to MIL-M-38510 in this document have been replaced by appropriate references to MIL-PRF-38535. All technical requirements now consist of this specification and MIL-PRF-38535. The MIL-M-38510 specification sheet number and PIN have been retained to avoid adversely impacting existing government logistics systems and contractor's parts lists.

6.5 Abbreviations, symbols and definitions. The abbreviations, symbols, and definitions used herein are defined in MIL-PRF-38535 and MIL-HDBK-1331, and as follows:

GND ..... Electrical ground (common terminal)
V_{IN} ..... Voltage level at an input terminal
I_{IN} ..... Current flowing into an input terminal

6.6 Logistic support. Lead materials and finishes (see 3.3) are interchangeable. Unless otherwise specified, microcircuits acquired for Government logistic support will be acquired to device class B (see 1.2.2), lead material and finish A (see 3.4). Longer lead lengths and lead forming should not affect the part number.

6.7 Substitutability. The cross-reference information below is presented for the convenience of users. Microcircuits covered by this specification will functionally replace the listed generic-industry type. Generic-industry microcircuit types may not have equivalent operational performance characteristics across military temperature ranges or reliability factors equivalent to MIL-M-35810 device types and may have slight physical variations in relation to case size. The presence of this information should not be deemed as permitting substitution of generic-industry types for MIL-M-38510 types or as a waiver of any of the provisions of MIL-PRF-38535.

Device type	Commercial type
01	54S74
02	54S112
03	54S113
04	54S114
05	54S174
06	54S175

6.8 Manufacturers' designation. Manufacturers' circuits included in this specification are designated as shown in table IV herein.

TABLE IV. Manufacturers' designator.

Device Type	Circuits			
	Texas Instruments	Signetics	Advanced Micro Devices	Fairchild Semi
01	A	B		C
02	A	B		C
03	A	B		C
04	A	B		C
05	A	D	B	C
06	A		B	C

6.9 Changes from previous issue. Marginal notations are not used in this revision to identify changes with respect to the previous issue due to the extensiveness of the changes.

Custodians:
Army - CR
Navy - EC
Air Force - 11
DLA - CC

Preparing activity:
DLA - CC

(Project 5962-2005-037)

Review activities:
Army - MI, SM
Navy - AS, CG, MC, SH, TD
Air Force - 03, 19, 99

NOTE: The activities listed above were interested in this document as of the date of this document. Since organizations and responsibilities can change, you should verify the currency of the information above using the ASSIST Online database at http://assist.daps.dla.mil.