INCH-POUND

MIL-M-38510/70C
2 November 2005
SUPERSEDING
MIL-M-38510/70B
22 November 1985

MILITARY SPECIFICATION

MICROCIRCUITS, DIGITAL, BIPOLAR, SCHOTTKY TTL, NAND GATES, MONOLITHIC SILICON

Inactive for new design after 6 September 1996.

This specification is approved for use by all Departments and Agencies of the Department of Defense.

The requirements for acquiring the product herein shall consist of this specification sheet and MIL-PRF 38535

1. SCOPE

1.1 Scope. This specification covers the detail requirements for monolithic, silicon, Schottky TTL, positive NAND logic gate microcircuits. Two product assurance classes and a choice of case outlines and lead finishes are provided for each type and are reflected in the complete part number. For this product, the requirements of MIL-M-38510 have been superseded by MIL-PRF-38535, (see 6.4).

1.2 Part or Identifying Number (PIN). The PIN is in accordance with MIL-PRF-38535 and as specified herein.

1.2.1 Device types. The device types are as follows:

Device type	Circuit
01	Quadruple, 2-input positive NAND gate
02	Quadruple, 2-input positive NAND gate (open collector output)
03	Hex, 1-input inverter gate
04	Hex, 1-input inverter gate (open collector output)
05	Triple, 3-input positive NAND gate
06	Dual, 4-input positive NAND gate
07	Dual, 4-input positive NAND gate (open collector output)
08	Single, 8-input positive NAND gate
09	Single, 13-input positive NAND gate
10	Single, 12-input positive NAND gate (three state output)

1.2.2 Device class. The device class is the product assurance level as defined in MIL-PRF-38535.

Comments, suggestions, or questions on this document should be addressed to: Commander, Defense Supply Center Columbus, ATTN: DSCC-VAS, P. O. Box 3990, Columbus, OH 43218-3990, or emailed to bipolar@dla.mil. Since contact information can change, you may want to verify the currency of this address information using the ASSIST Online database at http://assist.daps.dla.mil.

AMSC N/A FSC 5962

1.2.3 Case outlines. The case outlines are as designated in MIL-STD-1835 and as follows:

Outline letter	Descriptive designator	Terminals	Package style
A	GDFP5-F14 or CDFP6-F14	14	Flat pack
B	GDFP4-F14	14	Flat pack
C	GDIP1-T14 or CDIP2-T14	14	Dual-in-line
D	GDFP1-F14 or CDFP2-F14	14	Flat pack
E	GDIP1-T16 or CDIP2-T16	16	Dual-in-line
F	GDFP2-F16 or CDFP3-F16	16	Flat-pack
X	CQCC2-N20	20	Square chip carrier
2	CQCC1-N20	20	Square chip carrier

1.3 Absolute maximum ratings.

Supply voltage range ..... -0.5 V dc to +7.0 V dc
Input voltage range ..... -1.2 V dc at -18 mA to 5.5 V dc
Storage temperature range ..... -65°C to +150°C
Maximum power dissipation per gate, (P_D) 1/
Device types 01 thru 07 ..... 49.5 mW
Device type 08 and 09 ..... 55.0 mW
Device type 10 ..... 138.0 mW
Lead temperature (soldering 10 seconds) ..... 300°C
Thermal resistance, junction-to-case (θ_{JC}) ..... (See MIL-STD-1835)
Junction temperature (T_J) 2/ ..... 175°C

1.4 Recommended operating conditions.

Supply voltage (V_{CC}) ..... 4.5 V dc minimum to 5.5 V dc maximum
Minimum high level input voltage (V_{IH}) ..... 2.0 V dc
Maximum low level input voltage (V_{IL}) 3/ ..... 0.8 V dc
Case operating temperature range (T_C) ..... -55°C to 125°C

2.0 APPLICABLE DOCUMENT

2.1 General. The documents listed in this section are specified in sections 3, 4, or 5 of this specification. This section does not include documents cited in other sections of this specification or recommended for additional information or as examples. While every effort has been made to ensure the completeness of this list, document users are cautioned that they must meet all specified requirements of documents cited in sections 3, 4, or 5 of this specification, whether or not they are listed.

1/ Must withstand the added P_D due to short circuit condition (e.g. I_{OS}).
2/ Maximum junction temperature should not be exceeded except in accordance with allowable short duration burn-in screening condition in accordance with MIL-PRF-38535.
3/ V_{IL} = 0.7 V dc at +125°C.

2.2 Government documents.

2.2.1 Specifications and standards. The following specifications and standards form a part of this specification to the extent specified herein. Unless otherwise specified, the issues of these documents are those cited in the solicitation or contract.

DEPARTMENT OF DEFENSE SPECIFICATIONS

MIL-PRF-38535 - Integrated Circuits (Microcircuits) Manufacturing, General Specification for.

DEPARTMENT OF DEFENSE STANDARDS

MIL-STD-883 - Test Method Standard for Microelectronics.
MIL-STD-1835 - Interface Standard Electronic Component Case Outlines

(Copies of these documents are available online at http://assist.daps.dla.mil/quicksearch/ or http://assist.daps.dla.mil or from the Standardization Document Order Desk, 700 Robbins Avenue, Building 4D, Philadelphia, PA 19111-5094.)

2.3 Order of precedence. In the event of a conflict between the text of this specification and the references cited herein, the text of this document takes precedence. Nothing in this document, however, supersedes applicable laws and regulations unless a specific exemption has been obtained.

3. REQUIREMENTS

3.1 Qualification. Microcircuits furnished under this specification shall be products that are manufactured by a manufacturer authorized by the qualifying activity for listing on the applicable qualified manufacturers list before contract award (see 4.3 and 6.3).

3.2 Item requirements. The individual item requirements shall be in accordance with MIL-PRF-38535 and as specified herein or as modified in the device manufacturer's Quality Management (QM) plan. The modification in the QM plan shall not affect the form, fit, or function as described herein.

3.3 Design, construction, and physical dimensions. The design, construction, and physical dimensions shall be as specified in MIL-PRF-38535 and herein.

3.3.1 Logic diagrams and terminal connections. The logic diagrams and terminal connections shall be as specified on figure 1.

3.3.2 Truth tables and logic equations. The truth tables and logic equations shall be as specified on figure 2.

3.3.3 Schematic circuits. The schematic circuits shall be maintained by the manufacturer and made available to the qualifying activity and the preparing activity upon request.

3.3.4 Case outlines. Case outlines shall be as specified in 1.2.3.

3.4 Lead material and finish. Lead material and finish shall be in accordance with MIL-PRF-38535 (see 6.6).

3.5 Electrical performance characteristics. The electrical performance characteristics are as specified in table 1 and apply over the full recommended case operating temperature range, unless otherwise specified.

TABLE I. Electrical performance characteristics.

Test	Symbol	Conditions $-55°C \le T_C \le +125°C$ unless otherwise specified	Device type	Limits Min	Limits Max	Units
High-level output voltage	V_{OH}	V_{CC} = 4.5 V; V_{IN} = 0.8 V; I_{OH} = -1 mA @T_C = +125°C; V_{IN} = 0.7 V	01, 03, 05, 06, 08, 09	2.5		V
		V_{CC} = 4.5 V; V_{IN} = 0.8 V; I_{OH} = -2 mA @T_C = +125°C; V_{IN} = 0.7 V	10	2.4		V
Low-level output voltage	V_{OL}	V_{CC} = 4.5 V; V_{IN} = 2.0 V; I_{OL} = 20 mA	All	0.2	0.5	V
		T_C = +125°C	All		0.45	V
Input clamp voltage	V_{IC}	V_{CC} = 4.5 V; I_{IN} = -18 mA; T_C = +25°C	All		-1.2	V
Collector cut-off current	I_{CEX}	V_{CC} = 4.5 V; V_{IL} = V_{IC} max V_{IH} = 5.5 V	02, 04, 07		250	µA
		V_{CC} = 5.5 V; V_{IL} = GND V_{IH} = 5.5 V	01, 03, 05, 06, 08, 09, 10		250	µA
High-level input current	I_{IH1}	V_{CC} = 5.5 V; V_{IN} = 2.7 V	All		50	µA
	I_{IH2}	V_{CC} = 5.5 V; V_{IN} = 5.5 V	All		1	mA
Low-level input current	I_{IL}	V_{CC} = 5.5 V; V_{IN} = 0.5 V	All	-1	-2	mA
Short-circuit output current	I_{OS}	V_{CC} = 5.5 V 1/	01, 03, 05, 06, 08, 09	-40	-110	mA
High-level supply current, per gate	I_{CCH}	V_{CC} = 5.5 V; V_{IN} = 0 V	01, 03, 05, 06		4	mA
			02, 04, 07		3.3	mA
			08, 09		5	mA
Low-level supply current, per gate	I_{CCL}	V_{CC} = 5.5 V; V_{IN} = 5.5 V	01 thru 07		9	mA
			08, 09		10	mA

See footnotes at end of table.

TABLE I. Electrical performance characteristics - Continued.

Test	Symbol	Conditions $-55°C \le T_C \le +125°C$ unless otherwise specified		Device type	Limits Min	Limits Max	Units
Supply current	I_{CC}	V_{CC} = 5.5 V	Output high	10		13	mA
			Output low	10		16	mA
			Output off	10		25	mA
Propagation delay time, high-to-low level	t_{PHL}	C_L = 50 pF; R_L = 280Ω; V_{CC} = 5.0 V		01, 03, 05, 06	2	9	ns
				02, 04, 07	2	14	ns
				08	2	10	ns
				09	2	12	ns
				10	2	10.5	ns
Propagation delay time, low-to-high level	t_{PLH}	C_L = 50 pF; R_L = 280Ω; V_{CC} = 5.0 V		01, 03, 05, 06	2	9	ns
				02, 04, 07	2	14	ns
				08, 09, 10	2	9	ns
Output enable time to high level	t_{ZH}	C_L = 50 pF; R_L = 280Ω; V_{CC} = 5.0 V		10	2	25	ns
Output enable time to low level	t_{ZL}	C_L = 50 pF; R_L = 280Ω; V_{CC} = 5.0 V		10	2	26	ns
Output disable time from high level	t_{HZ}	C_L = 15 pF; V_{CC} = 5.0 V		10	2	11	ns
Output disable time from low level	t_{LZ}	C_L = 15 pF; V_{CC} = 5.0 V		10	2	17	ns

1/ Not more than one output should be shorted at a time.

TABLE II. Electrical test requirements.

MIL-PRF-38535 Test requirement	Subgroups (see table III)	
	Class S Devices	Class B Devices
Interim electrical parameters	1	1
Final electrical test	1*, 2, 3, 9, 10, 11	1*, 2, 3, 9
Group A test requirements	1, 2, 3, 9, 10, 11	1, 2, 3, 9, 10, 11
Group B electrical test parameters when using the method 5005 QCI option	1, 2, 3, 9, 10, 11	N/A
Groups C end point electrical parameters	1, 2, 3, 9, 10, 11	1, 2, 3
Group D end point electrical parameters	1, 2, 3	1, 2, 3

* PDA applies to subgroup 1.

3.6 Electrical test requirements. The electrical test requirements for each device class shall be the subgroups specified in table II. The electrical tests for each subgroup are described in table III.

3.7 Marking. Marking shall be in accordance with MIL-PRF-38535.

3.8 Microcircuit group assignment. The devices covered by this specification shall be in microcircuit group number 8 (see MIL-PRF-38535, appendix A).

4. PRODUCT ASSURANCE PROVISIONS VERIFICATION

4.1 Sampling and inspection. Sampling and inspection procedures shall be in accordance with MIL-PRF-38535 or as modified in the device manufacturer's Quality Management (QM) plan. The modification in the QM plan shall not effect the form, fit, or function as described herein.

4.2 Qualification inspection. Qualification inspection shall be in accordance with MIL-PRF-38535.

4.3 Screening. Screening shall be in accordance with MIL-PRF-38535 and shall be conducted on all devices prior to qualification and conformance inspection. The following additional criteria shall apply:

a. The burn-in test duration, test condition, and test temperature, or approved alternatives shall be as specified in the device manufacturer's QM plan in accordance with MIL-PRF-38535. The burn-in test circuit shall be maintained under document control by the device manufacturer's Technology Review Board (TRB) in accordance with MIL-PRF-38535 and shall be made available to the acquiring or preparing activity upon request. The test circuit shall specify the inputs, outputs, biases, and power dissipation, as applicable, in accordance with the intent specified in test method 1015 of MIL-STD-883.

b. Interim and final electrical test parameters shall be as specified in table II, except interim electrical parameters test prior to burn-in is optional at the discretion of the manufacturer.

c. Additional screening for space level product shall be as specified in MIL-PRF-38535.

4.4 Technology Conformance Inspection (TCI). Technology conformance inspection shall be in accordance with MIL-PRF-38535 and herein for groups A, B, C, and D inspections (see 4.4.1 through 4.4.4).

4.4.1 Group A inspection. Group A inspection shall be in accordance with table III of MIL-PRF-38535 and as follows:

a. Tests shall be as specified in table II herein.

b. Subgroups 4, 5, 6, 7, and 8, shall be omitted.

4.4.2 Group B inspection. Group B inspection shall be in accordance with table II of MIL-PRF-38535.

4.4.3 Group C inspection. Group C inspection shall be in accordance with table IV of MIL-PRF-38535 and as follows:

a. End point electrical parameters shall be as specified in table II herein.

b. The steady-state life test duration, test condition, and test temperature, or approved alternatives shall be as specified in the device manufacturer's QM plan in accordance with MIL-PRF-38535. The burn-in test circuit shall be maintained under document control by the device manufacturer's Technology Review Board (TRB) in accordance with MIL-PRF-38535 and shall be made available to the acquiring or preparing activity upon request. The test circuit shall specify the inputs, outputs, biases, and power dissipation, as applicable, in accordance with the intent specified in test method 1005 of MIL-STD-883.

4.4.4 Group D inspection. Group D inspection shall be in accordance with table V of MIL-PRF-38535. End-point electrical parameters shall be as specified in table II herein.

4.5 Methods inspection. Methods of inspection shall be as specified in the appropriate tables and as follows:

4.5.1 Voltage and current. All voltages given are referenced to the microcircuit ground terminal. Currents given are conventional current and positive when flowing into the referenced terminal.

DEVICE TYPES 01 AND 02
CASES A,B,C AND D

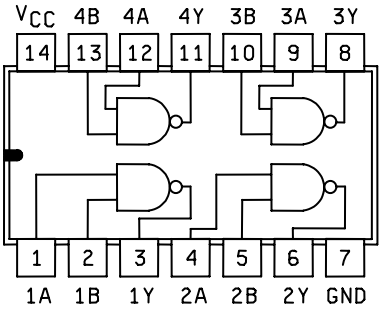

DEVICE TYPE 01
CASES 2 AND X

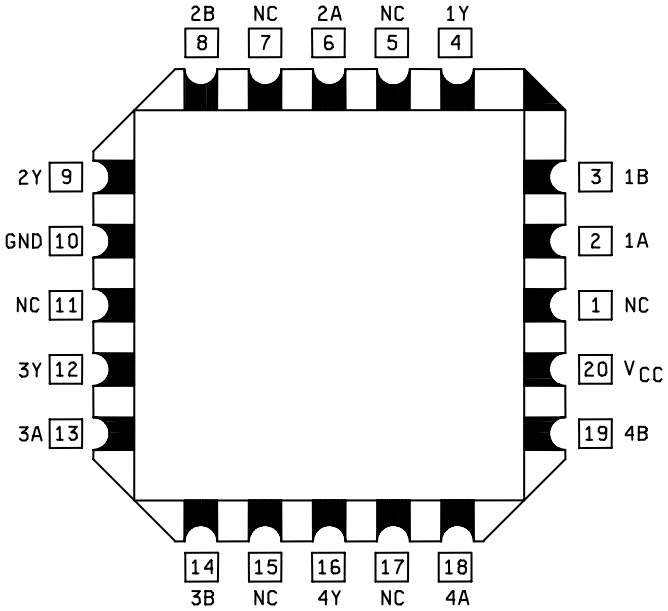

DEVICE TYPES 03 AND 04
CASES A,B,C AND D

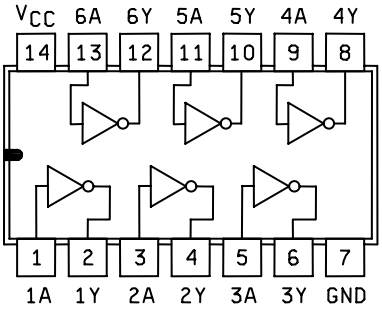

DEVICE TYPE 03
CASES 2 AND X

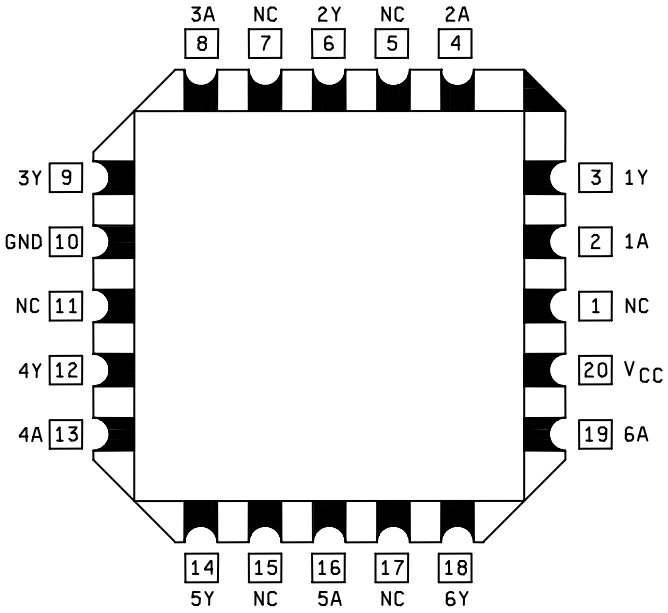

Figure 1. Logic diagram and terminal connections (top view).

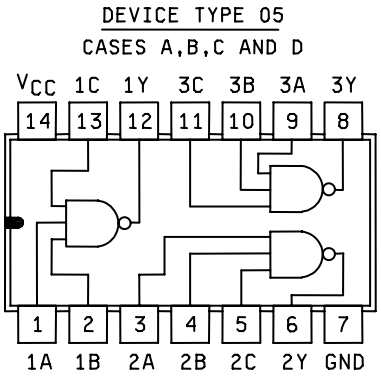

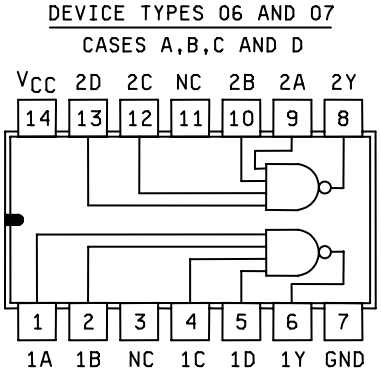

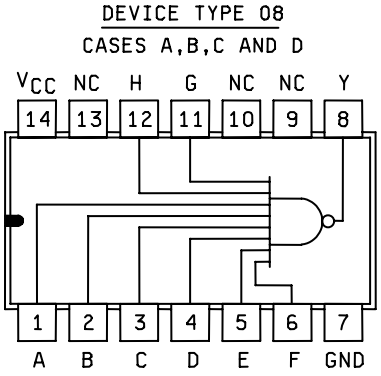

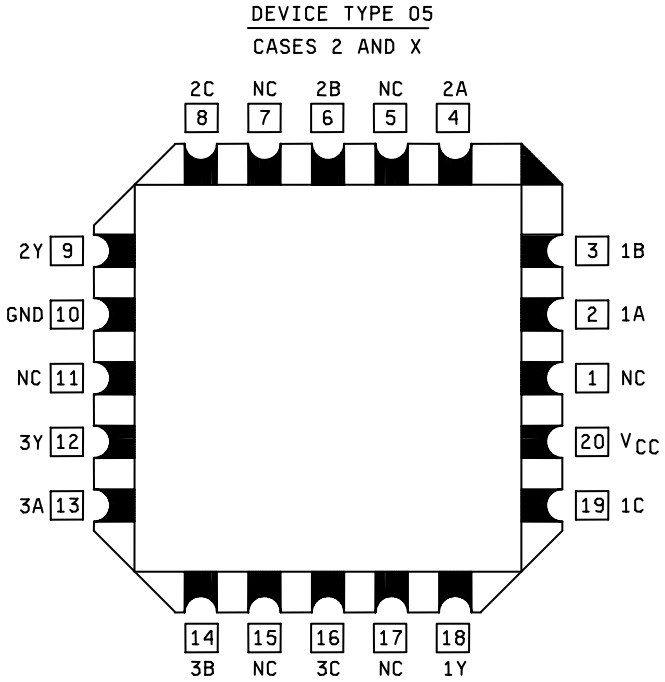

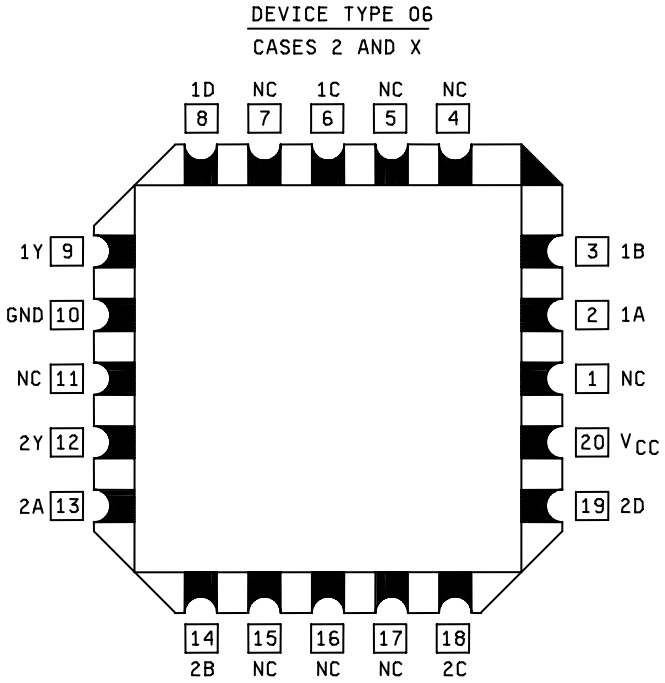

Figure 1. Logic diagram and terminal connections (top view) - Continued.

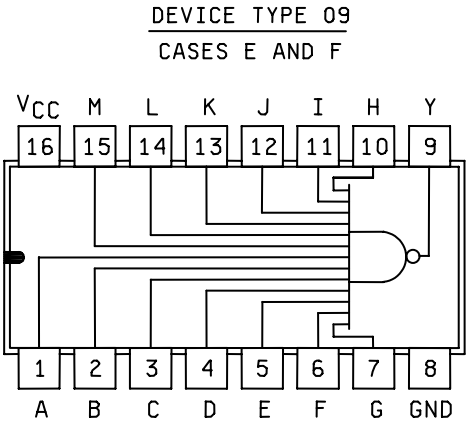

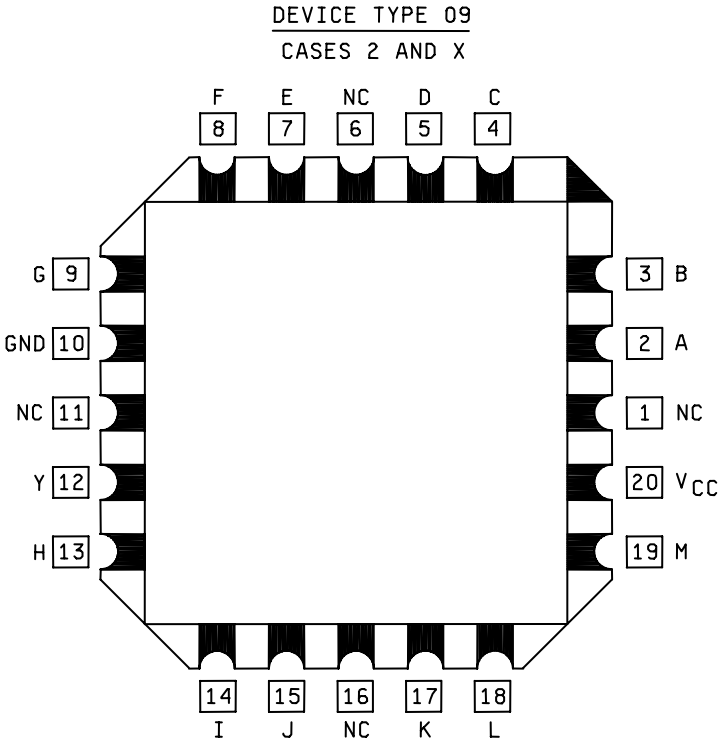

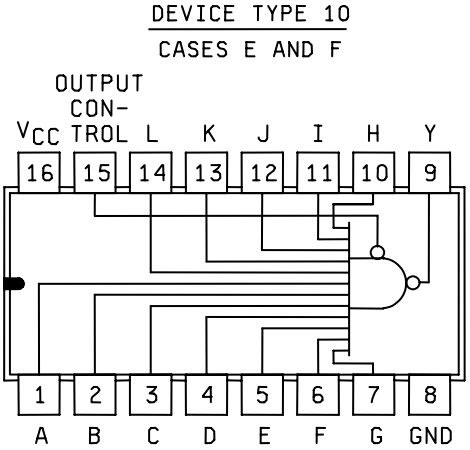

Figure 1. Logic diagram and terminal connections (top view) - Continued.

Device types 01 and 02

Truth table each gate		
Input		Output
A	B	Y
L	L	H
H	L	H
L	H	H
H	H	L

Positive logic Y = $\overline{AB}$

Device types 03 and 04

Truth table each gate	
Input	Output
A	Y
L	H
H	L

Positive logic Y = $\overline{A}$

Device type 05

Truth table each gate			
Input			Output
A	B	C	Y
L	L	L	H
H	L	L	H
L	H	L	H
H	H	L	H
L	L	H	H
H	L	H	H
L	H	H	H
H	H	H	L

Positive logic Y = $\overline{ABC}$

Device types 06 and 07

Truth table each gate				
Input				Output
A	B	C	D	Y
L	L	L	L	H
H	L	L	L	H
L	H	L	L	H
H	H	L	L	H
L	L	H	L	H
H	L	H	L	H
L	H	H	L	H
H	H	H	L	H
L	L	L	H	H
H	L	L	H	H
L	H	L	H	H
H	H	L	H	H
L	L	H	H	H
H	L	H	H	H
L	H	H	H	H
H	H	H	H	L

Positive logic Y = $\overline{ABCD}$

Figure 2. Truth tables and logic equations.

Device type 08

Truth table								
Inputs								Outputs
A	B	C	D	E	F	G	H	Y
H	H	H	H	H	H	H	H	L
All other combinations of H and L at the inputs give H output.								

Positive logic Y = $\overline{ABCDEFGH}$

Device type 09

Truth table													
Inputs													Output
A	B	C	D	E	F	G	H	I	J	K	L	M	Y
H	H	H	H	H	H	H	H	H	H	H	H	H	L
All other combinations of H and L at the inputs give H output.													

Positive logic Y = $\overline{ABCDEFGHIJKLM}$

Device type 10

Truth table													
Inputs													Output
A	B	C	D	E	F	G	H	I	J	K	L	Output control	Y
H	H	H	H	H	H	H	H	H	H	H	H	L	L
Any number of inputs low												L	H
Whatever the state of the inputs the output is in the high Z state												H	Z

NOTE: Z = High impedance state (output off)

Positive logic Y = $\overline{ABCDEFGHIJKL}$ (with output control low)

Figure 2. Truth tables and logic equations - Continued.

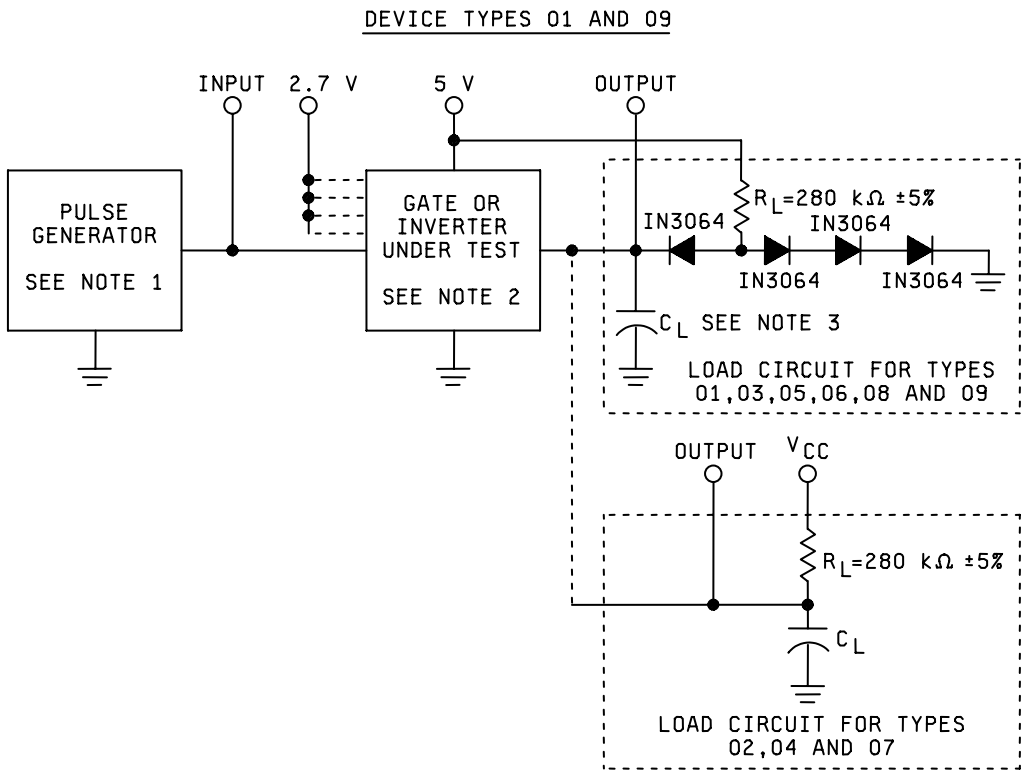

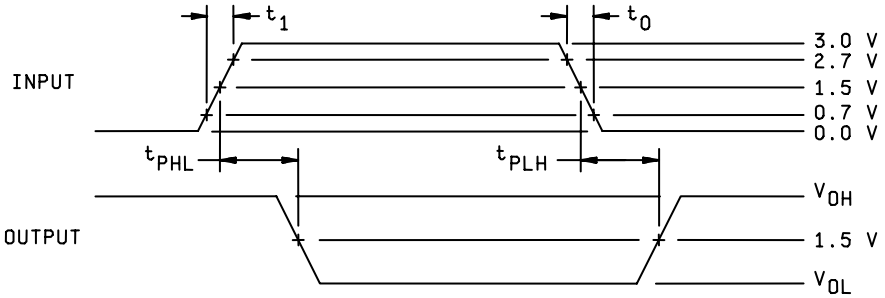

NOTES:

1/ Pulse generator has the following characteristics: $t_1 = t_0 \leq 2.5$ ns, PRR $\leq$ 1 MHz, $Z_{OUT} \approx 50\ \Omega$.
2/ Inputs not under test are at 2.7 V.
3/ C_L = 50 pF ±10% including scope probe, wiring, and stray capacitance, without package in test fixture.
4/ Voltage measurements are to be made with respect to network ground terminal.

FIGURE 3. Switching time test circuit and waveforms for device types 01 through 09.

DEVICE TYPE 10

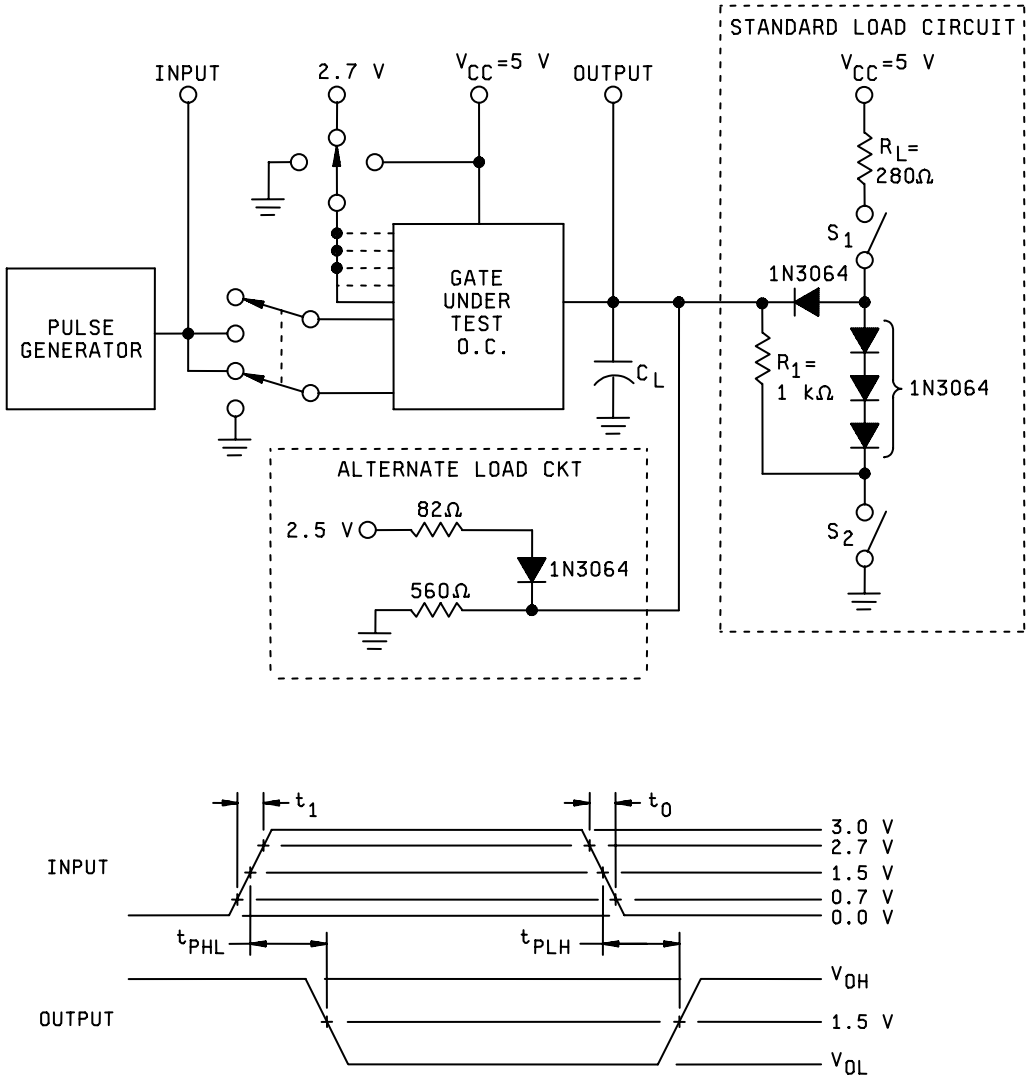

NOTE: All resistances ±5%.

FIGURE 4. Switching time test circuit for device type 10.

DEVICE TYPE 10
WAVEFORMS FOR STANDARD LOAD

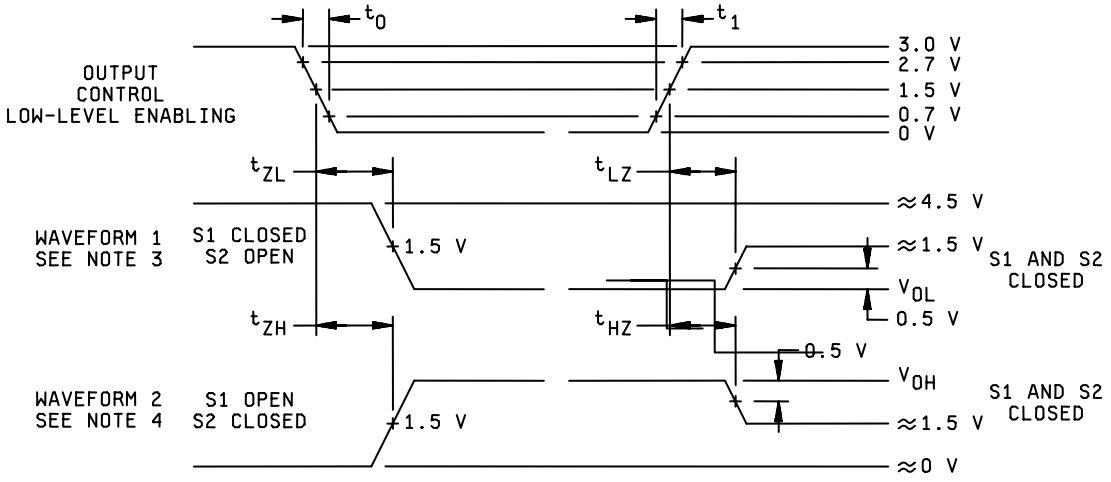

DEVICE TYPE 10
WAVEFORMS FOR ALTERNATE LOAD

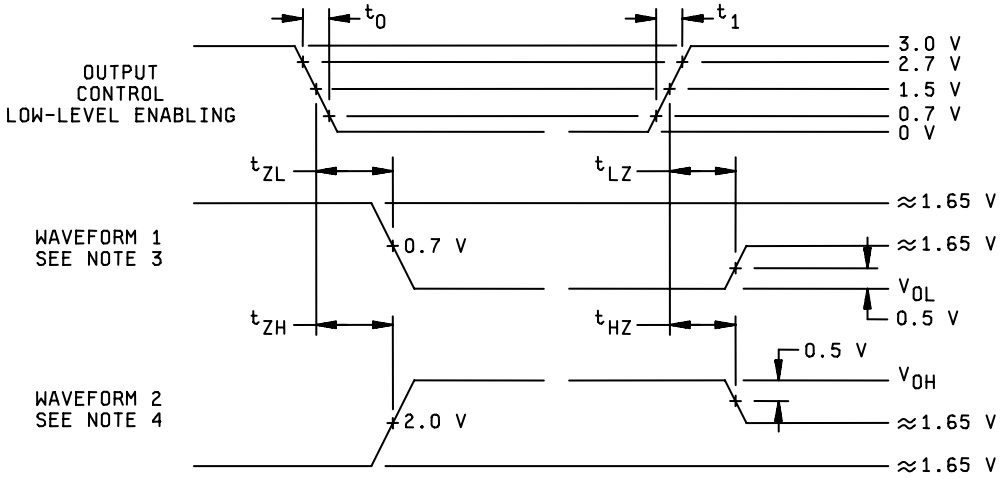

NOTES:

1/ Pulse generator has the following characteristics: $t_1 = t_0 \leq 2.5$ ns, PRR $\leq$ 1 MHz, $Z_{OUT} \approx 50\ \Omega$.

2/ Capacitor C_L includes probe, jig and wiring capacitance value is 50 pF ±10% for all tests when the alternate load is used. Value is 50 pF ±10% for t_{PHL}, t_{PLH}, t_{ZH} and t_{ZL} tests and 15 pF minimum for t_{LZ} and t_{HZ} tests when the standard load is used.

3/ Waveform 1 is for an output with internal conditions such that the output is low except when disabled by the output control.

4/ Waveform 2 is for an output with internal conditions such that the output is high except when disabled by the output control.

5/ Manufacturer may test with either the standard load circuit or the alternate load circuit at his option.

FIGURE 4. Switching time test circuit for device type 10 - Continued.

TABLE III. Group A inspection for device type 01.
Terminal conditions (pins not designated may be high ≥ 2.0 V, low ≤ 0.8 V, or open)

Subgroup	Symbol	MIL-STD-883 method	Cases X,2 1/	2	3	4	6	8	9	10	12	13	14	16	18	19	20	Measured terminal	Test limits		Unit
			Cases A, B, C, D	1	2	3	4	5	6	7	8	9	10	11	12	13	14		Min	Max	
			Test no.	1A	1B	1Y	2A	2B	2Y	GND	3Y	3A	3B	4Y	4A	4B	V_{CC}				
1	V_{OH}	3006	1	5.5 V	0.8 V	-1 mA	5.5 V	5.5 V		GND		5.5 V	5.5 V		5.5 v	5.5 V	4.5 V	1Y	2.5		V
T_C = 25°C		"	2	0.8 V	5.5 V	-1 mA	"	5.5 V		"		"	"		"	"	"	1Y	"		"
		"	3	5.5 V	"		"	0.8 V	-1 mA	"		"	"		"	"	"	2Y	"		"
		"	4	"	"		0.8 V	5.5 V	-1 mA	"		"	"		"	"	"	2Y	"		"
		"	5	"	"		5.5 V	"		"	-1 mA	"	0.8 V		"	"	"	3Y	"		"
		"	6	"	"		"	"		"	-1 mA	0.8 V	5.5 V		"	"	"	3Y	"		"
		"	7	"	"			"		"		5.5 V	"	-1 mA	"	0.8 V	"	4Y	"		"
		"	8	"	"		"	"		"		5.5 V	"	-1 mA	0.8 V	5.5 V	"	4Y	"		"
	V_{OL}	3007	9	2.0 V	2.0 V	20 mA	GND	GND		"		GND	GND		GND	GND	"	1Y	0.2	0.5	"
		"	10	GND	GND	"	2.0 V	2.0 V	20 mA	"		GND	GND		"	"	"	2Y	"	"	"
		"	11	"	"		GND	GND		"	20 mA	2.0 V	2.0 V		"	"	"	3Y	"	"	"
		"	12	"	"		GND	GND		"		GND	GND	20 mA	2.0 V	2.0 V	"	4Y	"	"	"
	V_{IC}		13	-18 mA						"							"	1A		-1.2	"
			14		-18 mA					"							"	1B		"	"
			15				-18 mA			"							"	2A		"	"
			16					-18 mA		"							"	2B		"	"
			17							"		-18 mA					"	3A		"	"
			18							"			-18 mA				"	3B		"	"
			19							"					-18 mA		"	4A		"	"
			20							"						-18 mA	"	4B		"	"
	I_{IH1}	3010	21	2.7 V	GND		GND	GND		"		GND	GND		GND	GND	5.5 V	1A		50	μA
		"	22	GND	2.7 V		GND	"		"		"	"		"	"	"	1B		"	"
		"	23	"	GND		2.7 V	"		"		"	"		"	"	"	2A		"	"
		"	24	"	"		GND	2.7 V		"		"	"		"	"	"	2B		"	"
		"	25	"	"			GND		"		2.7 V	"		"	"	"	3A		"	"
		"	26	"	"			"		"		GND	2.7 V		"	"	"	3B		"	"
		"	27	"	"	"		"		"		"	GND		2.7 V	"	"	4A		"	"
		"	28	"	"	"		"		"		"	"		GND	2.7 V	"	4B		"	"
	I_{IH2}	"	29	5.5 V	"	"		"		"		"	"		"	GND	"	1A		1	mA
		"	30	GND	5.5 V	"		"		"		"	"		"	"	"	1B		"	"
		"	31	"	GND	"	5.5 V	"		"		"	"		"	"	"	2A		"	"
		"	32	"	"	"	GND	5.5 V		"		"	"		"	"	"	2B		"	"
		"	33	"	"	"		GND		"		5.5 V	"		"	"	"	3A		"	"
		"	34	"	"			"		"		GND	5.5 V		"	"	"	3B		"	"
		"	35	"	"			"		"		"	GND		5.5 V	"	"	4A		"	"
		"	36	"	"	"		"		"		"	GND		GND	5.5 V	"	4B		"	"
						"															
						"															

See footnotes at end of table.

TABLE III. Group A inspection for device type 01 – Continued.
Terminal conditions (pins not designated may be high ≥ 2.0 V, low ≤ 0.8 V, or open)

Subgroup	Symbol	MIL-STD-883 method	Cases X,2 1/	2	3	4	6	8	9	10	12	13	14	16	18	19	20	Measured terminal	Test limits		Unit
			Cases A, B, C, D	1	2	3	4	5	6	7	8	9	10	11	12	13	14		Min	Max	
			Test no.	1A	1B	1Y	2A	2B	2Y	GND	3Y	3A	3B	4Y	4A	4B	V_{CC}				
1	I_{IL}	3009	37	0.5 V	5.5 V		5.5 V	5.5 V				5.5 V	5.5 V		5.5 V	5.5 V	5.5 V	1A	-1	-2	mA
T_C = 25°C		"	38	5.5 V	0.5 V		5.5 V	"		"		"	"		"	"	"	1B	"	"	"
		"	39	"	5.5 V		0.5 V	"	GND	"		"	"		"	"	"	2A	"	"	"
		"	40	"	"		5.5 V	0.5 V		"		"	"		"	"	"	2B	"	"	"
		"	41	"	"			5.5 V		"		0.5 V	"		"	"	"	3A	"	"	"
		"	42	"	"			"		"		5.5 V	0.5 V		"	"	"	3B	"	"	"
		"	43	"	"			"		"		"	5.5 V		0.5 V	"	"	4A	"	"	"
		"	44	"	"	"	"	"		"		"	5.5 V		5.5 V	0.5 V	"	4B	"	"	"
	I_{OS}	3011	45	GND	GND	GND				"							"	1Y	-40	-100	"
		"	46			"	GND	GND	GND	"							"	2Y	"	"	"
		"	47							"	GND	GND	GND				"	3Y	"	"	"
		"	48							"				GND	GND	GND	"	4Y	"	2/	"
	I_{CCH}	3005	49	GND	GND		GND	GND		"		GND	GND		GND	GND	5.5 V	V_{CC}		15	mA
	I_{CCL}	3005	50	5.5 V	5.5 V		5.5 V	5.5 V		"		5.5 V	5.5 V		5.5 V	5.5 V	"	V_{CC}		36	mA
	I_{CEX}		51	GND	GND	5.5 V	5.5 V	5.5 V		"		"	"		"	"	"	1Y		250	µA
			52	5.5 V	5.5 V		GND	GND	5.5 V	"		"	"		"	"	"	2Y		"	"
			53	"	"		5.5 V	5.5 V		"	5.5 V	GND	GND		"	"	"	3Y		"	"
			54	"	"		5.5 V	5.5 V		"		5.5 V	5.5 V	5.5 V	GND	GND	"	4Y		"	"
2	Same tests, terminal conditions, and limits as for subgroup 1, except T_C = 125°C and V_{IC} tests are omitted. V_{OL} (max) = 0.45 V and V_{IL} = 0.7 V.																				
3	Same tests, terminal conditions, and limits as for subgroup 1, except T_C = -55°C and V_{IC} tests are omitted.																				
9	t_{PHL}	3003	55	IN	2.7 V	OUT	2.7 V	2.7 V		GND		2.7 V	2.7 V		2.7 V	2.7 V	5.0 V	1A to 1Y	2.0	7.5	ns
T_C = 25°C		Fig. 3	56	2.7 V	IN	OUT	2.7 V	"		"		"	"		"	"	"	1B to 1Y	"	"	"
		"	57	"	2.7 V		IN	"	OUT	"		"	"		"	"	"	2A to 2Y	"	"	"
		"	58	"	"		2.7 V	IN	OUT	"		"	"		"	"	"	2B to 2Y	"	"	"
		"	59	"	"		"	2.7 V		"	OUT	IN	"		"	"	"	3A to 3Y	"	"	"
		"	60	"	"		"	"		"	OUT	2.7 V	IN		"	"	"	3B to 3Y	"	"	"
		"	61	"	"			"		"		"	2.7 V	OUT	IN	"	"	4A to 4Y	"	"	"
		"	62	"	"		"	"		"		"	"	OUT	2.7 V	IN	"	4B to 4Y	"	"	"

See footnotes at end of table.

TABLE III. Group A inspection for device type 01 – Continued.
Terminal conditions (pins not designated may be high ≥ 2.0 V, low ≤ 0.8 V, or open)

Subgroup	Symbol	MIL-STD-883 method	Cases X,2 1/	2	3	4	6	8	9	10	12	13	14	16	18	19	20	Measured terminal	Test limits		Unit
			Cases A, B, C, D	1	2	3	4	5	6	7	8	9	10	11	12	13	14		Min	Max	
			Test no.	1A	1B	1Y	2A	2B	2Y	GND	3Y	3A	3B	4Y	4A	4B	V_{CC}				
9	t_{PLH}	3003	63	IN	2.7 V	OUT	2.7 V	2.7 V		GND		2.7 V	2.7 V		2.7 V	2.7 V	5.0 V	1A to 1Y	2.0	7.0	ns
T_C = 25°C		Fig. 3	64	2.7 V	IN	OUT	2.7 V	"		"		"	"		"	"	"	1B to 1Y	"	"	"
		"	65	"	2.7 V		IN	"	OUT	"		"	"		"	"	"	2A to 2Y	"	"	"
		"	66	"	"		2.7 V	IN	OUT	"		"	"		"	"	"	2B to 2Y	"	"	"
		"	67	"	"		"	2.7 V		"	OUT	IN	"		"	"	"	3A to 3Y	"	"	"
		"	68	"	"		"	"		"	OUT	2.7 V	IN		"	"	"	3B to 3Y	"	"	"
		"	69	"	"			"		"		"	2.7 V	OUT	IN	"	"	4A to 4Y	"	"	"
		"	70	"	"			"		"		"	"	OUT	2.7 V	IN	"	4B to 4Y	"	"	"
10	t_{PHL}	"	71	IN	"	OUT	"	"		"		"	"		"	2.7 V	"	1A to 1Y	"	9.0	"
T_C = 125°C		"	72	2.7 V	IN	OUT	"	"		"		"	"		"	"	"	1B to 1Y	"	"	"
		"	73	"	2.7 V		IN	"	OUT	"		"	"		"	"	"	2A to 2Y	"	"	"
		"	74	"	"		2.7 V	IN	OUT	"		"	"		"	"	"	2B to 2Y	"	"	"
		"	75	"	"		"	2.7 V		"	OUT	IN	"		"	"	"	3A to 3Y	"	"	"
		"	76	"	"		"	"		"	OUT	2.7 V	IN		"	"	"	3B to 3Y	"	"	"
		"	77	"	"			"		"		"	2.7 V	OUT	IN	"	"	4A to 4Y	"	"	"
		"	78	"	"			"		"		"	"	OUT	2.7 V	IN	"	4B to 4Y	"	"	"
	t_{PLH}	"	79	IN	"	OUT	"	"		"		"	"		"	2.7 V	"	1A to 1Y	"	"	"
		"	80	2.7 V	IN	OUT	"	"		"		"	"		"	"	"	1B to 1Y	"	"	"
		"	81	"	2.7 V		IN	"	OUT	"		"	"		"	"	"	2A to 2Y	"	"	"
		"	82	"	"		2.7 V	IN	OUT	"		"	"		"	"	"	2B to 2Y	"	"	"
		"	83	"	"		"	2.7 V		"	OUT	IN	"		"	"	"	3A to 3Y	"	"	"
		"	84	"	"		"	"		"	OUT	2.7 V	IN		"	"	"	3B to 3Y	"	"	"
		"	85	"	"			"		"		"	2.7 V	OUT	IN	"	"	4A to 4Y	"	"	"
		"	86	"	"			"		"		"	2.7 V	OUT	2.7 V	IN	"	4B to 4Y	"	"	"
11	Same tests, terminal conditions, and limits as for subgroup 10, except T_C = -55°C.																				

1/ Case X and 2 terminals not designated are NC.
2/ For circuit C, I_{OS} maximum test limits = -110 mA.

TABLE III. Group A inspection for device type 02.
Terminal conditions (pins not designated may be high ≥ 2.0 V, low ≤ 0.8 V, or open)

Subgroup	Symbol	MIL-STD-883 method	Cases A, B, C, D	1	2	3	4	5	6	7	8	9	10	11	12	13	14	Measured terminal	Test limits		Unit
			Test no.	1A	1B	1Y	2A	2B	2Y	GND	3Y	3A	3B	4Y	4A	4B	V_{CC}		Min	Max	
1	V_{OL}	3007	1	2.0 V	2.0 V	20 mA	GND	GND		GND		GND	GND		GND	GND	4.5 V	1Y	0.2	0.5	V
T_C = 25°C		"	2	GND	GND		2.0 V	2.0 V	20 mA	"		GND	GND		"	"	"	2Y	"	"	"
		"	3	"	"		GND	GND		"	20 mA	2.0 V	2.0 V		"	"	"	3Y	"	"	"
		"	4	"	"		GND	GND		"		GND	GND	20 mA	2.0 V	2.0 V	"	4Y	"	"	"
	I_{CEX}		5	GND	5.5 V	5.5 V	5.5 V	5.5 V		"		5.5 V	5.5 V		5.5 V	5.5 V	"	1Y		250	μA
			6	5.5 V	GND	5.5 V	5.5 V	"		"		"	"		"	"	"	1Y		"	"
			7	"	5.5 V		GND	"	5.5 V	"		"	"		"	"	"	2Y		"	"
			8	"	"		5.5 V	GND	5.5 V	"		"	"		"	"	"	2Y		"	"
			9	"	"		"	5.5 V		"	5.5 V	GND	"		"	"	"	3Y		"	"
			10	"	"		"	"		"	5.5 V	5.5 V	GND		"	"	"	3Y		"	"
			11	"	"			"		"		"	5.5 V	5.5 V	GND	"	"	4Y		"	"
			12	"	"		"	"		"		"	5.5 V	5.5 V	5.5 V	GND	"	4Y		"	"
	V_{IC}		13	-18 mA		"				"							"	1A		-1.2	V
			14		-18 mA					"							"	1B		"	"
			15				-18 mA			"							"	2A		"	"
			16					-18 mA		"							"	2B		"	"
			17							"		-18 mA					"	3A		"	"
			18							"			-18 mA				"	3B		"	"
			19							"					-18 mA		"	4A		"	"
			20							"						-18 mA	"	4B		"	"
	I_{IH1}	3010	21	2.7 V	GND		GND	GND		"		GND	GND		GND	GND	5.5 V	1A		50	μA
		"	22	GND	2.7 V		GND	"		"		"	"		"	"	"	1B		"	"
		"	23	"	GND		2.7 V	"		"		"	"		"	"	"	2A		"	"
		"	24	"	"		GND	2.7 V		"		"	"		"	"	"	2B		"	"
		"	25	"	"			GND		"		2.7 V	"		"	"	"	3A		"	"
		"	26	"	"			"		"		GND	2.7 V		"	"	"	3B		"	"
		"	27	"	"			"		"		"	GND		2.7 V	"	"	4A		"	"
		"	28	"	"	"		"		"		"	"		GND	2.7 V	"	4B		"	"
	I_{IH2}	"	29	5.5 V	"	"		"		"		"	"		"	GND	"	1A		1	mA
		"	30	GND	5.5 V	"		"		"		"	"		"	"	"	1B		"	"
		"	31	"	GND	"	5.5 V	"		"		"	"		"	"	"	2A		"	"
		"	32	"	"	"	GND	5.5 V		"		"	"		"	"	"	2B		"	"
		"	33	"	"			GND		"		5.5 V	"		"	"	"	3A		"	"
		"	34	"	"			"		"		GND	5.5 V		"	"	"	3B		"	"
		"	35	"	"			"		"		"	GND		5.5 V	"	"	4A		"	"
		"	36	"	"	"		"		"		"	GND		GND	5.5 V	"	4B		"	"
						"															
						"															

TABLE III. Group A inspection for device type 02 – Continued.
Terminal conditions (pins not designated may be high $\geq$ 2.0 V, low $\leq$ 0.8 V, or open)

Subgroup	Symbol	MIL-STD-883 method	Cases A, B, C, D	1	2	3	4	5	6	7	8	9	10	11	12	13	14	Measured terminal	Test limits		Unit
			Test no.	1A	1B	1Y	2A	2B	2Y	GND	3Y	3A	3B	4Y	4A	4B	V_{CC}		Min	Max	
1	I_{IL}	3009	37	0.5 V	5.5 V		5.5 V	5.5 V				5.5 V	5.5 V		5.5 V	5.5 V	5.5 V	1A	-1	-2	mA
T_C = 25°C		"	38	5.5 V	0.5 V		5.5 V	"		"		"	"		"	"	"	1B	"	"	"
		"	39	"	5.5 V		0.5 V	"	GND	"		"	"		"	"	"	2A	"	"	"
		"	40	"	"		5.5 V	0.5 V		"		"	"		"	"	"	2B	"	"	"
		"	41	"	"			5.5 V		"		0.5 V	"		"	"	"	3A	"	"	"
		"	42	"	"			"		"		5.5 V	0.5 V		"	"	"	3B	"	"	"
		"	43	"	"			"		"		"	5.5 V		0.5 V	"	"	4A	"	"	"
		"	44	"	"	"		"		"		"	"		5.5 V	0.5 V	"	4B	"	"	"
	I_{CCL}	3005	45	"	"	"		"		"		"	"		5.5 V	5.5 V	"	V_{CC}		36	"
	I_{CCH}	3005	46	GND	GND	"	GND	GND		"		GND	GND		GND	GND	"	V_{CC}		13.2	"
2	Same tests, terminal conditions, and limits as for subgroup 1, except T_C = 125°C and V_{IC} tests are omitted. V_{OL} (max) = 0.45 V.																				
3	Same tests, terminal conditions, and limits as for subgroup 1, except T_C = -55°C and V_{IC} tests are omitted.																				
9	t_{PHL}	3003	47	IN	2.7 V	OUT	2.7 V	2.7 V		GND		2.7 V	2.7 V		2.7 V	2.7 V	5.0 V	1A to 1Y	2.0	11.5	ns
T_C = 25°C		Fig. 3	48	2.7 V	IN	OUT	2.7 V	"		"		"	"		"	"	"	1B to 1Y	"	"	"
		"	49	"	2.7 V		IN	"	OUT	"		"	"		"	"	"	2A to 2Y	"	"	"
		"	50	"	"		2.7 V	IN	OUT	"		"	"		"	"	"	2B to 2Y	"	"	"
		"	51	"	"		"	2.7 V		"	OUT	IN	"		"	"	"	3A to 3Y	"	"	"
		"	52	"	"		"	"		"	OUT	2.7 V	IN		"	"	"	3B to 3Y	"	"	"
		"	53	"	"			"		"		"	2.7 V	OUT	IN	"	"	4A to 4Y	"	"	"
		"	54	"	"			"		"		"	"	OUT	2.7 V	IN	"	4B to 4Y	"	"	"
	t_{PLH}	"	55	IN	"	OUT	"	"		"		"	"		"	2.7 V	"	1A to 1Y	"	12.0	"
		"	56	2.7 V	IN	OUT	"	"		"		"	"		"	"	"	1B to 1Y	"	"	"
		"	57	"	2.7 V		IN	"	OUT	"		"	"		"	"	"	2A to 2Y	"	"	"
		"	58	"	"		2.7 V	IN	OUT	"		"	"		"	"	"	2B to 2Y	"	"	"
		"	59	"	"		"	2.7 V		"	OUT	IN	"		"	"	"	3A to 3Y	"	"	"
		"	60	"	"		"	"		"	OUT	2.7 V	IN		"	"	"	3B to 3Y	"	"	"
		"	61	"	"			"		"		"	2.7 V	OUT	IN	"	"	4A to 4Y	"	"	"
		"	62	"	"			"		"		"	"	OUT	2.7 V	IN	"	4B to 4Y	"	"	"

TABLE III. Group A inspection for device type 02 – Continued.
Terminal conditions (pins not designated may be high ≥ 2.0 V, low ≤ 0.8 V, or open)

Subgroup	Symbol	MIL-STD-883 method	Cases A, B, C, D	1	2	3	4	5	6	7	8	9	10	11	12	13	14	Measured terminal	Test limits		Unit
			Test no.	1A	1B	1Y	2A	2B	2Y	GND	3Y	3A	3B	4Y	4A	4B	V_{CC}		Min	Max	
10	t_{PHL}	3003	63	IN	2.7 V	OUT	2.7 V	2.7 V		GND		2.7 V	2.7 V		2.7 V	2.7 V	5.0 V	1A to 1Y	2.0	14.0	ns
T_C = 125°C		Fig. 3	64	2.7 V	IN	OUT	2.7 V	“		“		“	“		“	“	“	1B to 1Y	“	“	“
		“	65	“	2.7 V		IN	“	OUT	“		“	“		“	“	“	2A to 2Y	“	“	“
		“	66	“	“		2.7 V	IN	OUT	“		“	“		“	“	“	2B to 2Y	“	“	“
		“	67	“	“		“	2.7 V		“	OUT	IN	“		“	“	“	3A to 3Y	“	“	“
		“	68	“	“		“	“		“	OUT	2.7 V	IN		“	“	“	3B to 3Y	“	“	“
		“	69	“	“			“		“		“	2.7 V	OUT	IN	“	“	4A to 4Y	“	“	“
		“	70	“	“			“		“		“	“	OUT	2.7 V	IN	“	4B to 4Y	“	“	“
	t_{PLH}	“	71	IN	“	OUT	“	“		“		“	“		“	2.7 V	“	1A to 1Y	“	“	“
		“	72	2.7 V	IN	OUT	“	“		“		“	“		“	“	“	1B to 1Y	“	“	“
		“	73	“	2.7 V		IN	“	OUT	“		“	“		“	“	“	2A to 2Y	“	“	“
		“	74	“	“		2.7 V	IN	OUT	“		“	“		“	“	“	2B to 2Y	“	“	“
		“	75	“	“		“	2.7 V		“	OUT	IN	“		“	“	“	3A to 3Y	“	“	“
		“	76	“	“		“	“		“	OUT	2.7 V	IN		“	“	“	3B to 3Y	“	“	“
		“	77	“	“			“		“		“	2.7 V	OUT	IN	“	“	4A to 4Y	“	“	“
		“	78	“	“			“		“		“	2.7 V	OUT	2.7 V	IN	“	4B to 4Y	“	“	“
11	Same tests, terminal conditions, and limits as for subgroup 10, except T_C = -55°C.																				

TABLE III. Group A inspection for device type 03.
Terminal conditions (pins not designated may be high ≥ 2.0 V, low ≤ 0.8 V, or open)

Subgroup	Symbol	MIL-STD-883 method	Cases X,2 1/	2	3	4	6	8	9	10	12	13	14	16	18	19	20	Measured terminal	Test limits		Unit
			Cases A, B, C, D	1	2	3	4	5	6	7	8	9	10	11	12	13	14		Min	Max	
			Test no.	1A	1Y	2A	2Y	3A	3Y	GND	4Y	4A	5Y	5A	6Y	6A	V_{CC}				
1	V_{OH}	3006	1	0.8 V	-1 mA	5.5 V		5.5 V		GND		5.5 V		5.5 V		5.5 V	4.5 V	1Y	2.5		V
T_C = 25°C		"	2	5.5 V		0.8 V	-1 mA	5.5 V		"		"		"		"	"	2Y	"		"
		"	3	"		5.5 V		0.8 V	-1 mA	"		"		"		"	"	3Y	"		"
		"	4	"		"		5.5 V		"	-1 mA	0.8 V		"		"	"	4Y	"		"
		"	5	"		"		"		"		5.5 V	-1 mA	0.8 V		"	"	5Y	"		"
		"	6	"		"		"		"		5.5 V		5.5 V	-1 mA	0.8 V	"	6Y	"		"
	V_{OL}	3007	7	2.0 V	20 mA	GND		GND		"		GND		GND		GND	"	1Y	0.2	0.5	"
		"	8	GND		2.0 V	20 mA	GND		"		"		"		"	"	2Y	"	"	"
		"	9	"		GND		2.0 V	20 mA	"		"		"		"	"	3Y	"	"	"
		"	10	"		"		GND		"	20 mA	2.0 V		"		"	"	4Y	"	"	"
		"	11	"		"		"		"		GND	20 mA	2.0 V		"	"	5Y	"	"	"
		"	12	"		"		"		"		GND		GND	20 mA	2.0 V	"	6Y	"	"	"
	V_{IC}		13	-18 mA						"							"	1A		-1.2	"
			14			-18 mA				"							"	2A		"	"
			15					-18 mA		"							"	3A		"	"
			16							"		-18 mA					"	4A		"	"
			17							"				-18 mA			"	5A		"	"
			18							"						-18 mA	"	6A		"	"
	I_{IH1}	3010	19	2.7 V		GND		GND		"		GND		GND		GND	5.5 V	1A		50	μA
		"	20	GND		2.7 V		GND		"		"		"		"	"	2A		"	"
		"	21	"		GND		2.7 V		"		"		"		"	"	3A		"	"
		"	22	"		"		GND		"		2.7 V		"		"	"	4A		"	"
		"	23	"		"		"		"		GND		2.7 V		"	"	5A		"	"
		"	24	"		"		"		"		"		GND		2.7 V	"	6A		"	"
	I_{IH2}	"	25	5.5 V		"		"		"		"		"		GND	"	1A		1	mA
		"	26	GND		5.5 V				"		"		"		"	"	2A		"	"
		"	27	"		GND		5.5 V		"		"		"		"	"	3A		"	"
		"	28	"		"	"	GND		"		5.5 V		"		"	"	4A		"	"
		"	29	"		"		"		"		GND		5.5 V		"	"	5A		"	"
		"	30	"		"		"		"		GND		GND		5.5 V	"	6A		"	"

TABLE III. Group A inspection for device type 03 - Continued.
Terminal conditions (pins not designated may be high ≥ 2.0 V, low ≤ 0.8 V, or open)

Subgroup	Symbol	MIL-STD-883 method	Cases X,2 1/	2	3	4	6	8	9	10	12	13	14	16	18	19	20	Measured terminal	Test limits		Unit
			Cases A, B, C, D	1	2	3	4	5	6	7	8	9	10	11	12	13	14		Min	Max	
			Test no.	1A	1Y	2A	2Y	3A	3Y	GND	4Y	4A	5Y	5A	6Y	6A	V_{CC}				
1	I_{IL}	3009	31	0.5 V		5.5 V		5.5 V		GND		5.5 V		5.5 V		5.5 V	5.5 V	1A	-1	-2	mA
T_C = 25°C		"	32	5.5 V		0.5 V		5.5 V		"		"		"		"	"	2A	"	"	"
		"	33	"		5.5 V		0.5 V		"		"		"		"	"	3A	"	"	"
		"	34	"		"		5.5 V		"		0.5 V		"		"	"	4A	"	"	"
		"	35	"		"		"		"		5.5 V		0.5 V				5A	"	"	"
		"	36	"		"		"		"		5.5 V		5.5 V		0.5 V	"	6A	"	"	"
	I_{OS}	3011	37	GND	GND					"						"	"	1Y	-40	-100	"
		"	38			GND	GND			"							"	2Y	"	"	"
		"	39					GND	GND	"							"	3Y	"	"	"
		"	40							"	GND	GND					"	4Y	"	"	"
		"	41							"			GND	GND			"	5Y	"	"	"
		"	42							"					GND	GND	"	6Y	"	2/	"
	I_{CCH}	3005	43	GND		GND		GND		"		GND		GND		GND	"	V_{CC}		24	"
	I_{CCL}	3005	44	5.5 V		5.5 V		5.5 V		"		5.5 V		5.5 V		5.5 V	"	V_{CC}		54	"
	I_{CEX}		45	GND	5.5 V	5.5 V		5.5 V		"		5.5 V		5.5 V		5.5 V	"	1Y		250	µA
			46	5.5 V		GND	5.5 V	5.5 V		"		"		"		"	"	2Y		"	"
			47	"		5.5 V		GND	5.5 V	"		"		"		"	"	3Y		"	"
			48	"		"		5.5 V		"	5.5 V	GND		"		"	"	4Y		"	"
			49	"		"		"		"		5.5 V	5.5 V	GND		"	"	5Y		"	"
			50	"		"		"		"		5.5 V		5.5 V	5.5 V	GND	"	6Y		"	"
2	Same tests, terminal conditions, and limits as for subgroup 1, except T_C = 125°C and V_{IC} tests are omitted. V_{OL} (max) = 0.45 V and V_{IL} = 0.7 V.																				
3	Same tests, terminal conditions, and limits as for subgroup 1, except T_C = -55°C and V_{IC} tests are omitted.																				
9	t_{PHL}	3003	51	IN	OUT	2.7 V		2.7 V		GND		2.7 V		2.7 V		2.7 V	5.0 V	1A to 1Y	2.0	7.5	ns
T_C = 25°C		Fig. 3	52	2.7 V		IN	OUT	2.7 V		"		"		"		"	"	2A to 2Y	"	"	"
		"	53	"		2.7 V		IN	OUT	"		"		"		"	"	3A to 3Y	"	"	"
		"	54	"		"		2.7 V		"	OUT	IN		"		"	"	4A to 4Y	"	"	"
		"	55	"		"		"		"		2.7 V	OUT	IN		"	"	5A to 5Y	"	"	"
		"	56	"		"		"		"		"		2.7 V	OUT	IN	"	6A to 6Y	"	"	"
	t_{PLH}	"	57	IN	OUT	"		"		"		"		"		2.7 V	"	1A to 1Y	"	7.0	"
		"	58	2.7 V		IN	OUT	"		"		"		"		"	"	2A to 2Y	"	"	"
		"	59	"		2.7 V		IN	OUT	"		"		"		"	"	3A to 3Y	"	"	"
		"	60	"		"		2.7 V		"	OUT	IN		"		"	"	4A to 4Y	"	"	"
		"	61	"		"		"		"		2.7 V	OUT	IN		"	"	5A to 5Y	"	"	"
		"	62	"		"		"		"		"		2.7 V	OUT	IN	"	6A to 6Y	"	"	"

See notes at end of table.

TABLE III. Group A inspection for device type 03 - Continued.
Terminal conditions (pins not designated may be high ≥ 2.0 V, low ≤ 0.8 V, or open)

Subgroup	Symbol	MIL-STD-883 method	Cases X,2 1/	2	3	4	6	8	9	10	12	13	14	16	18	19	20	Measured terminal	Test limits		Unit
			Cases A, B, C, D	1	2	3	4	5	6	7	8	9	10	11	12	13	14		Min	Max	
			Test no.	1A	1Y	2A	2Y	3A	3Y	GND	4Y	4A	5Y	5A	6Y	6A	V_{CC}				
10	t_{PHL}	3003	63	IN	OUT	2.7 V		2.7 V		GND		2.7 V		2.7 V		2.7 V	5.0 V	1A to 1Y	2.0	9.0	ns
T_C = 125°C		Fig. 3	64	2.7 V		IN	OUT	2.7 V		"		"		"		"	"	2A to 2Y	"	"	"
		"	65	"		2.7 V		IN	OUT	"		"		"		"	"	3A to 3Y	"	"	"
		"	66	"		"		2.7 V		"	OUT	IN		"		"	"	4A to 4Y	"	"	"
		"	67	"		"		"		"		2.7 V	OUT	IN		"	"	5A to 5Y	"	"	"
		"	68	"		"		"		"		"		2.7 V	OUT	IN	"	6A to 6Y	"	"	"
	t_{PLH}	"	69	IN	OUT	"		"		"		"		"		2.7 V	"	1A to 1Y	"	"	"
		"	70	2.7 V		IN	OUT	"		"		"		"		"	"	2A to 2Y	"	"	"
		"	71	"		2.7 V		IN	OUT	"		"		"		"	"	3A to 3Y	"	"	"
		"	72	"		"		2.7 V		"	OUT	IN		"		"	"	4A to 4Y	"	"	"
		"	73	"		"		"		"		2.7 V	OUT	IN		"	"	5A to 5Y	"	"	"
		"	74	"		"		"		"		2.7 V		2.7 V	OUT	IN	"	6A to 6Y	"	"	"
11	Same tests, terminal conditions, and limits as for subgroup 10, except T_C = -55°C.																				

1/ Case X and 2 terminals not designated are NC.
2/ For circuit C, I_{OS} maximum test limits = -110 mA.

TABLE III. Group A inspection for device type 04.
Terminal conditions (pins not designated may be high ≥ 2.0 V, low ≤ 0.8 V, or open)

Subgroup	Symbol	MIL-STD-883 method	Cases A, B, C, D	1	2	3	4	5	6	7	8	9	10	11	12	13	14	Measured terminal	Test limits		Unit
			Test no.	1A	1Y	2A	2Y	3A	3Y	GND	4Y	4A	5Y	5A	6Y	6A	V_{CC}		Min	Max	
1	V_{OL}	3007	1	2.0 V	20 mA	GND		GND		GND		GND		GND		GND	4.5 V	1Y	0.2	0.5	V
T_C = 25°C		"	2	GND		2.0 V	20 mA	GND		"		"		"		"	"	2Y	"	"	"
		"	3	"		GND		2.0 V	20 mA	"		"		"		"	"	3Y	"	"	"
		"	4	"		"		GND		"	20 mA	2.0 V		"		"	"	4Y	"	"	"
		"	5	"		"		"		"		GND	20 mA	2.0 V		"	"	5Y	"	"	"
		"	6	"		"		"		"		GND		GND	20 mA	2.0 V	"	6Y	"	"	"
	I_{CEX}		7	GND	5.5 V	5.5 V		5.5 V		"		5.5 V		5.5 V		5.5 V	"	1Y		250	μA
			8	5.5 V		GND	5.5 V	5.5 V		"		"		"		"	"	2Y		"	"
			9	"		5.5 V		GND	5.5 V	"		"		"		"	"	3Y		"	"
			10	"		"		5.5 V		"	5.5 V	GND		"		"	"	4Y		"	"
			11	"		"		"		"		5.5 V	5.5 V	GND		"	"	5Y		"	"
			12	"		"		"		"		5.5 V		5.5 V	5.5 V	GND	"	6Y		"	"
	V_{IC}		13	-18 mA						"							"	1A		-1.2	V
			14			-18 mA				"							"	2A		"	"
			15					-18 mA		"							"	3A		"	"
			16							"		-18 mA					"	4A		"	"
			17							"				-18 mA			"	5A		"	"
			18							"						-18 mA	"	6A		"	"
	I_{IH1}	3010	19	2.7 V		GND		GND		"		GND		GND		GND	5.5 V	1A		50	μA
		"	20	GND		2.7 V		GND		"		"		"		"	"	2A		"	"
		"	21	"		GND		2.7 V		"		"		"		"	"	3A		"	"
		"	22	"		"		GND		"		2.7 V		"		"	"	4A		"	"
		"	23	"		"		"		"		GND		2.7 V		"	"	5A		"	"
		"	24	"		"		"		"		"		GND		2.7 V	"	6A		"	"
	I_{IH2}	"	25	5.5 V		"		"		"		"		"		GND	"	1A		1	mA
		"	26	GND		5.5 V				"		"		"		"	"	2A		"	"
		"	27	"		GND		5.5 V		"		"		"		"	"	3A		"	"
		"	28	"		"	"	GND		"		5.5 V		"		"	"	4A		"	"
		"	29	"		"		"		"		GND		5.5 V		"	"	5A		"	"
		"	30	"		"		"		"		GND		GND		5.5 V	"	6A		"	"
	I_{IL}	3009	31	0.5 V		5.5 V		5.5 V		"		5.5 V		5.5 V		"	"	1A	-1	-2	"
		"	32	5.5 V		0.5 V		5.5 V		"		"		"		"	"	2A	"	"	"
		"	33	"		5.5 V		0.5 V		"		"		"		"	"	3A	"	"	"
		"	34	"		"		5.5 V		"		0.5 V		"		"	"	4A	"	"	"
		"	35	"		"		"		"		5.5 V		0.5 V		"	"	5A	"	"	"
		"	36	"		"		"		"		"		5.5 V		0.5 V	"	6A	"	"	"

TABLE III. Group A inspection for device type 04 – Continued.
Terminal conditions (pins not designated may be high ≥ 2.0 V, low ≤ 0.8 V, or open)

Subgroup	Symbol	MIL-STD-883 method	Cases A, B, C, D	1	2	3	4	5	6	7	8	9	10	11	12	13	14	Measured terminal	Test limits		Unit
			Test no.	1A	1Y	2A	2Y	3A	3Y	GND	4Y	4A	5Y	5A	6Y	6A	V_{CC}		Min	Max	
1	I_{CCL}	3005	37	5.5 V		5.5 V		5.5 V		GND		5.5 V		5.5 V		5.5 V	5.5 V	V_{CC}		54	mA
T_C = 25°C	I_{CCH}	3005	38	GND		GND		GND		GND				GND		GND	5.5 V	V_{CC}		19.8	mA
2	Same tests, terminal conditions, and limits as for subgroup 1, except T_C = 125°C and V_{IC} tests are omitted. V_{OL} (max) = 0.45 V.																				
3	Same tests, terminal conditions, and limits as for subgroup 1, except T_C = -55°C and V_{IC} tests are omitted.																				
9	t_{PHL}	3003	39	IN	OUT	2.7 V		2.7 V		GND		2.7 V		2.7 V		2.7 V	5.0 V	1A to 1Y	2.0	11.5	ns
T_C = 25°C		Fig. 3	40	2.7 V		IN	OUT	2.7 V		"		"		"		"	"	2A to 2Y	"	"	"
		"	41	"		2.7 V		IN	OUT	"		"		"		"	"	3A to 3Y	"	"	"
		"	42	"		"		2.7 V		"	OUT	IN		"		"	"	4A to 4Y	"	"	"
		"	43	"		"		"		"		2.7 V	OUT	IN		"	"	5A to 5Y	"	"	"
		"	44	"		"		"		"		"		2.7 V	OUT	IN	"	6A to 6Y	"	"	"
	t_{PLH}	"	45	IN	OUT	"		"		"		"		"		2.7 V	"	1A to 1Y	"	12.0	"
		"	46	2.7 V		IN	OUT	"		"		"		"		"	"	2A to 2Y	"	"	"
		"	47	"		2.7 V		IN	OUT	"		"		"		"	"	3A to 3Y	"	"	"
		"	48	"		"		2.7 V		"	OUT	IN		"		"	"	4A to 4Y	"	"	"
		"	49	"		"		"		"		2.7 V	OUT	IN		"	"	5A to 5Y	"	"	"
		"	50	"		"		"		"		"		2.7 V	OUT	IN	"	6A to 6Y	"	"	"
10	t_{PHL}	"	51	IN	OUT	"		"		"		"		"		2.7 V	"	1A to 1Y	"	14	"
T_C = 125°C		"	52	2.7 V		IN	OUT	"		"		"		"		"	"	2A to 2Y	"	"	"
		"	53	"		2.7 V		IN	OUT	"		"		"		"	"	3A to 3Y	"	"	"
		"	54	"		"		2.7 V		"	OUT	IN		"		"	"	4A to 4Y	"	"	"
		"	55	"		"		"		"		2.7 V	OUT	IN		"	"	5A to 5Y	"	"	"
		"	56	"		"		"		"		"		2.7 V	OUT	IN	"	6A to 6Y	"	"	"
	t_{PLH}	"	57	IN	OUT	"		"		"		"		"		2.7 V	"	1A to 1Y	"	"	"
		"	58	2.7 V		IN	OUT	"		"		"		"		"	"	2A to 2Y	"	"	"
		"	59	"		2.7 V		IN	OUT	"		"		"		"	"	3A to 3Y	"	"	"
		"	60	"		"		2.7 V		"	OUT	IN		"		"	"	4A to 4Y	"	"	"
		"	61	"		"		"		"		2.7 V	OUT	IN		"	"	5A to 5Y	"	"	"
		"	62	"		"		"		"		2.7 V		2.7 V	OUT	IN	"	6A to 6Y	"	"	"
11	Same tests, terminal conditions, and limits as for subgroup 10, except T_C = -55°C.																				

TABLE III. Group A inspection for device type 05.
Terminal conditions (pins not designated may be high ≥ 2.0 V, low ≤ 0.8 V, or open)

Subgroup	Symbol	MIL-STD-883 method	Cases X,2 1/	2	3	4	6	8	9	10	12	13	14	16	18	19	20	Measured terminal	Test limits		Unit
			Cases A, B, C, D	1	2	3	4	5	6	7	8	9	10	11	12	13	14		Min	Max	
			Test no.	1A	1B	2A	2B	2C	2Y	GND	3Y	3A	3B	3C	1Y	1C	V_{CC}				
1	V_{OH}	3006	1	0.8 V	5.5 V	5.5 V	5.5 V	5.5 V		GND		5.5 V	5.5 V	5.5 V	-1 mA	5.5 V	4.5 V	1Y	2.5		V
T_C = 25°C		"	2	5.5 V	0.8 V	"	"	"		"		"	"	"	"	5.5 V	"	1Y	"		"
		"	3	"	5.5 V	"	"	"		"		"	"	"	"	0.8 V	"	1Y	"		"
		"	4	"	"	0.8 V	"	"	-1 mA	"		"	"	"		5.5 V	"	2Y	"		"
		"	5	"	"	5.5 V	0.8 V	"	"	"		"	"	"		"	"	2Y	"		"
		"	6	"	"	"	5.5 V	0.8 V	"	"		"	"	"		"	"	2Y	"		"
		"	7	"	"	"	"	5.5 V		"	-1 mA	0.8 V	"	"		"	"	3Y	"		"
		"	8	"	"	"	"	"		"	"	5.5 V	0.8 V	"		"	"	3Y	"		"
		"	9	"	"	"	"	"		"	"	5.5 V	5.5 V	0.8 V		"	"	3Y	"		"
	V_{OL}	3007	10	2.0 V	2.0 V	GND	GND	GND		"		GND	GND	GND	20 mA	2.0 V	"	1Y	0.2	0.5	"
		"	11	GND	GND	2.0 V	2.0 V	2.0 V	20 mA	"		GND	GND	GND		GND	"	2Y	"	"	"
		"	12	GND	GND	GND	GND	GND		"	20 mA	2.0 V	2.0 V	2.0 V		GND	"	3Y	"	"	"
	V_{IC}		13	-18 mA						"							"	1A		-1.2	"
			14		-18 mA					"							"	1B		"	"
			15			-18 mA				"							"	2A		"	"
			16				-18 mA			"							"	2B		"	"
			17					-18 mA		"							"	2C		"	"
			18							"		-18 mA					"	3A		"	"
			19							"			-18 mA				"	3B		"	"
			20							"				-18 mA			"	3C		"	"
			21							"						-18 mA	"	1C		"	"
	I_{IH1}	3010	22	2.7 V	GND	GND	GND	GND		"		GND	GND	GND		GND	5.5 V	1A		50	μA
		"	23	GND	2.7 V	"	"	"		"		"	"	"		GND	"	1B		"	"
		"	24	"	GND	"	"	"		"		"	"	"		2.7 V	"	1C		"	"
		"	25	"	"	2.7 V	"	"		"		"	"	"		GND	"	2A		"	"
		"	26	"	"	GND	2.7 V	"		"		"	"	"		"	"	2B		"	"
		"	27	"	"	"	GND	2.7 V		"		"	"	"		"	"	2C		"	"
		"	28	"	"	"	"	GND		"		2.7 V	"	"		"	"	3A		"	"
		"	29	"	"	"	"	"		"		GND	2.7 V	"		"	"	3B		"	"
		"	30	"	"	"	"	"		"		"	GND	2.7 V		"	"	3C		"	"

See footnote at end of table.

TABLE III. Group A inspection for device type 05 - Continued.
Terminal conditions (pins not designated may be high ≥ 2.0 V, low ≤ 0.8 V, or open)

Subgroup	Symbol	MIL-STD-883 method	Cases X,2 1/	2	3	4	6	8	9	10	12	13	14	16	18	19	20	Measured terminal	Test limits		Unit
			Cases A, B, C, D	1	2	3	4	5	6	7	8	9	10	11	12	13	14		Min	Max	
			Test no.	1A	1B	2A	2B	2C	2Y	GND	3Y	3A	3B	3C	1Y	1C	V_{CC}				
1 T_C = 25°C	I_{IH2}	3010	31	5.5 V	GND	GND	GND	GND		GND		GND	GND	GND		GND	5.5 V	1A		1	mA
		"	32	GND	5.5 V	"	"	"		"		"	"	"		"	"	1B		"	"
		"	33	"	GND	"	"	"		"		"	"	"		5.5 V	"	1C		"	"
		"	34	"	"	5.5 V	"	"		"		"	"	"		GND	"	2A		"	"
		"	35	"	"	GND	5.5 V	"		"		"	"	"		"	"	2B		"	"
		"	36	"	"	"	GND	5.5 V		"		"	"	"		"	"	2C		"	"
		"	37	"	"	"	"	GND		"		5.5 V	"	"		"	"	3A		"	"
		"	38	"	"	"	"	"		"		GND	5.5 V	"		"	"	3B		"	"
		"	39	"	"	"	"	"		"		GND	GND	5.5 V		"	"	3C		"	"
	I_{IL}	3009	40	0.5 V	5.5 V	5.5 V	5.5 V	5.5 V		"		5.5 V	5.5 V	"		5.5 V	"	1A	-1	-2	"
		"	41	5.5 V	0.5 V	"	"	"		"		"	"	"		5.5 V	"	1B	"	"	"
		"	42	"	5.5 V	"	"	"		"		"	"	"		0.5 V	"	1C	"	"	"
		"	43	"	"	0.5 V	"	"		"		"	"	"		5.5 V	"	2A	"	"	"
		"	44	"	"	5.5 V	0.5 V	"		"		"	"	"		"	"	2B	"	"	"
		"	45	"	"	"	5.5 V	0.5 V		"		"	"	"		"	"	2C	"	"	"
		"	46	"	"	"	"	5.5 V		"		0.5 V	"	"		"	"	3A	"	"	"
		"	47	"	"	"	"	"		"		5.5 V	0.5 V	"		"	"	3B	"	"	"
		"	48	"	"	"	"	"		"		5.5 V	5.5 V	0.5 V		"	"	3C	"	"	"
	I_{OS}	3011	49	GND	GND					"					GND	GND	"	1Y	-40	-100 2/	"
		"	50			GND	GND	GND	GND	"							"	2Y	"	"	"
		"	51							"	GND	GND	GND	GND			"	3Y	"	"	"
	I_{CEX}		52	GND	GND	5.5 V	5.5 V	5.5 V		"		5.5 V	5.5 V	5.5 V	5.5 V	GND	"	1Y		250	μA
			53	5.5 V	5.5 V	GND	GND	GND	5.5 V	"		5.5 V	5.5 V	5.5 V		5.5 V	"	2Y		"	"
			54	5.5 V	5.5 V	5.5 V	5.5 V	5.5 V		"	5.5 V	GND	GND	GND		5.5 V	"	3Y		"	"
	I_{CCH}	3005	55	GND	GND	GND	GND	GND		"		GND	GND	GND		GND	"	V_{CC}		12	mA
	I_{CCL}	3005	56	5.5 V	5.5 V	5.5 V	5.5 V	5.5 V		"		5.5 V	5.5 V	5.5 V		5.5 V	"	V_{CC}		27	mA
2	Same tests, terminal conditions, and limits as for subgroup 1, except T_C = 125°C and V_{IC} tests are omitted. V_{OL} (max) = 0.45 V and V_{IL} = 0.7 V.																				
3	Same tests, terminal conditions, and limits as for subgroup 1, except T_C = -55°C and V_{IC} tests are omitted.																				

See footnote at end of table.

TABLE III. Group A inspection for device type 05 - Continued.

Terminal conditions (pins not designated may be high ≥ 2.0 V, low ≤ 0.8 V, or open)

Subgroup	Symbol	MIL-STD-883 method	Cases X,2 1/	2	3	4	6	8	9	10	12	13	14	16	18	19	20	Measured terminal	Test limits		Unit
			Cases A, B, C, D	1	2	3	4	5	6	7	8	9	10	11	12	13	14		Min	Max	
			Test no.	1A	1B	2A	2B	2C	2Y	GND	3Y	3A	3B	3C	1Y	1C	V_{CC}				
9	t_{PHL}	3003	57	IN	2.7 V	2.7 V	2.7 V	2.7 V		GND		2.7 V	2.7 V	2.7 V	OUT	2.7 V	5.0 V	1A to 1Y	2.0	7.5	ns
T_C = 25°C		Fig. 3	58	2.7 V	IN	"	"	"		"		"	"	"	"	2.7 V	"	1B to 1Y	"	"	"
		"	59	"	2.7 V	"	"	"		"		"	"	"	"	IN	"	1C to 1Y	"	"	"
		"	60	"	"	IN	"	"	OUT	"		"	"	"		2.7 V	"	2A to 2Y	"	"	"
		"	61	"	"	2.7 V	IN	"	"	"		"	"	"		"	"	2B to 2Y	"	"	"
		"	62	"	"	"	2.7 V	IN	"	"		"	"	"		"	"	2C to 2Y	"	"	"
		"	63	"	"	"	"	2.7 V		"	OUT	IN	"	"		"	"	3A to 3Y	"	"	"
		"	64	"	"	"	"	"		"	"	2.7 V	IN	"		"	"	3B to 3Y	"	"	"
		"	65	"	"	"	"	"		"	"	"	2.7 V	IN		"	"	3C to 3Y	"	"	"
	t_{PLH}	"	66	IN	"	"	"	"		"		"	"	2.7 V	OUT	"	"	1A to 1Y	"	7.0	"
		"	67	2.7 V	IN	"	"	"		"		"	"	"	"	"	"	1B to 1Y	"	"	"
		"	68	"	2.7 V	"	"	"		"		"	"	"	"	IN	"	1C to 1Y	"	"	"
		"	69	"	"	IN	"	"	OUT	"		"	"	"		2.7 V	"	2A to 2Y	"	"	"
		"	70	"	"	2.7 V	IN	"	"	"		"	"	"		"	"	2B to 2Y	"	"	"
		"	71	"	"	"	2.7 V	IN	"	"		"	"	"		"	"	2C to 2Y	"	"	"
		"	72	"	"	"	"	2.7 V		"	OUT	IN	"	"		"	"	3A to 3Y	"	"	"
		"	73	"	"	"	"	"		"	"	2.7 V	IN	"		"	"	3B to 3Y	"	"	"
		"	74	"	"	"	"	"		"	"	"	2.7 V	IN		"	"	3C to 3Y	"	"	"
10	t_{PHL}	"	75	IN	"	"	"	"		"		"	"	2.7 V	OUT	"	"	1A to 1Y	"	9.0	"
T_C = 125°C		"	76	2.7 V	IN	"	"	"		"		"	"	"	"	"	"	1B to 1Y	"	"	"
		"	77	"	2.7 V	"	"	"		"		"	"	"	"	IN	"	1C to 1Y	"	"	"
		"	78	"	"	IN	"	"	OUT	"		"	"	"		2.7 V	"	2A to 2Y	"	"	"
		"	79	"	"	2.7 V	IN	"	"	"		"	"	"		"	"	2B to 2Y	"	"	"
		"	80	"	"	"	2.7 V	IN	"	"		"	"	"		"	"	2C to 2Y	"	"	"
		"	81	"	"	"	"	2.7 V		"	OUT	IN	"	"		"	"	3A to 3Y	"	"	"
		"	82	"	"	"	"	"		"	"	2.7 V	IN	"		"	"	3B to 3Y	"	"	"
		"	83	"	"	"	"	"		"	"	"	2.7 V	IN		"	"	3C to 3Y	"	"	"
	t_{PLH}	"	84	IN	"	"	"	"		"		"	"	2.7 V	OUT	"	"	1A to 1Y	"	"	"
		"	85	2.7 V	IN	"	"	"		"		"	"	"	"	"	"	1B to 1Y	"	"	"
		"	86	"	2.7 V	"	"	"		"		"	"	"	"	IN	"	1C to 1Y	"	"	"
		"	87	"	"	IN	"	"	OUT	"		"	"	"		2.7 V	"	2A to 2Y	"	"	"
		"	88	"	"	2.7 V	IN	"	"	"		"	"	"		"	"	2B to 2Y	"	"	"
		"	89	"	"	"	2.7 V	IN	"	"		"	"	"		"	"	2C to 2Y	"	"	"
		"	90	"	"	"	"	2.7 V		"	OUT	IN	"	"		"	"	3A to 3Y	"	"	"
		"	91	"	"	"	"	"		"	"	2.7 V	IN	"		"	"	3B to 3Y	"	"	"
		"	92	"	"	"	"	"		"	"	2.7 V	2.7 V	IN		"	"	3C to 3Y	"	"	"
11	Same tests, terminal conditions, and limits as for subgroup 10, except T_C = -55°C.																				

_/ Case X and 2 terminals not designated are NC.

_/ For circuit C, I_{OS} maximum test limits = -110 mA.

TABLE III. Group A inspection for device type 06.
Terminal conditions (pins not designated may be high ≥ 2.0 V, low ≤ 0.8 V, or open)

Subgroup	Symbol	MIL-STD-883 method	Cases X,2 1/	2	3	4	6	8	9	10	12	13	14	16	18	19	20	Measured terminal	Test limits		Unit
			Cases A, B, C, D	1	2	3	4	5	6	7	8	9	10	11	12	13	14		Min	Max	
			Test no.	1A	1B	NC	1C	1D	1Y	GND	2Y	2A	2B	NC	2C	2D	V_{CC}				
1	V_{OH}	3006	1	0.8 V	5.5 V	GND	5.5 V	5.5 V	-1 mA	GND		5.5 V	5.5 V	GND	5.5 V	5.5 V	4.5 V	1Y	2.5		V
T_C = 25°C		"	2	5.5 V	0.8 V	"	5.5 V	"	"	"		"	"	"	"	"	"	1Y	"		"
		"	3	"	5.5 V	"	0.8 V	"	"	"		"	"	"	"	"	"	1Y	"		"
		"	4	"	"	"	5.5 V	0.8 V		"		"	"	"	"	"	"	1Y	"		"
		"	5	"	"	"	"	5.5 V		"	-1 mA	0.8 V	"	"	"	"	"	2Y	"		"
		"	6	"	"	"	"	"		"	"	5.5 V	0.8 V	"	"	"	"	2Y	"		"
		"	7	"	"	"	"	"		"	"	"	5.5 V	"	0.8 V	"	"	2Y	"		"
		"	8	"	"	"	"	"		"	"	"	5.5 V	"	5.5 V	0.8 V	"	2Y	"		"
	V_{OL}	3007	9	2.0 V	2.0 V	"	2.0 V	2.0 V	20 mA	"			GND	"	GND	GND	"	1Y	0.2	0.5	"
		3007	10	GND	GND	"	GND	GND		"	20 mA	2.0 V	2.0 V	"	2.0 V	2.0 V	"	2Y	0.2	0.5	"
	V_{IC}		11	-18 mA		"				"	GND			"			"	1A		-1.2	"
			12		-18 mA	"				"				"			"	1B		"	"
			13			"	-18 mA			"				"			"	1C		"	"
			14			"		-18 mA		"				"				1D		"	"
			15			"				"		-18 mA		"				2A		"	"
			16			"				"			-18 mA	"				2B		"	"
			17			"				"				"	-18 mA	"	"	2C		"	"
			18			"				"				"		-18 mA	"	2D		"	"
	I_{IH1}	3010	19	2.7 V	GND	"	GND	GND		"		GND	GND	"	GND	GND	5.5 V	1A		50	μA
		"	20	GND	2.7 V	"	GND	"		"		"	"	"	"	"	"	1B		"	"
		"	21	"	GND	"	2.7 V	"		"		"	"	"	"	"	"	1C		"	"
		"	22	"	"	"	GND	2.7 V		"		"	"	"	"	"	"	1D		"	"
		"	23	"	"	"	"	GND		"		2.7 V	"	"	"	"	"	2A		"	"
		"	24	"	"	"	"	"		"		GND	2.7 V	"	"	"	"	2B		"	"
		"	25	"	"	"	"	"		"		"	GND	"	2.7 V	GND	"	2C		"	"
		"	26	"	"	"	"	"		"		"	"	"	GND	2.7 V	"	2D		"	"
	I_{IH2}	"	27	5.5 V	"	"	"	"		"		"	"	"	"	GND	"	1A		1	mA
		"	28	GND	5.5 V	"	"	"		"		"	"	"	"	"	"	1B		"	"
		"	29	"	GND	"	5.5 V	"		"		"	"	"	"	"	"	1C		"	"
		"	30	"	"	"	GND	5.5 V		"		"	"	"	"	"	"	1D		"	"
		"	31	"	"	"	"	GND		"		5.5 V	"	"	"	"	"	2A		"	"
		"	32	"	"	"	"	"		"		GND	5.5 V	"	"	"	"	2B		"	"
		"	33	"	"	"	"	"		"		"	GND	"	5.5 V	"	"	2C		"	"
		"	34	"	"	"	"	"		"			GND	"	GND	5.5 V	"	2D		"	"

See footnote at end of table.

TABLE III. Group A inspection for device type 06 – Continued.
Terminal conditions (pins not designated may be high ≥ 2.0 V, low ≤ 0.8 V, or open)

Subgroup	Symbol	MIL-STD-883 method	Cases X,2 1/	2	3	4	6	8	9	10	12	13	14	16	18	19	20	Measured terminal	Test limits		Unit
			Cases A, B, C, D	1	2	3	4	5	6	7	8	9	10	11	12	13	14		Min	Max	
			Test no.	1A	1B	NC	1C	1D	1Y	GND	2Y	2A	2B	NC	2C	2D	V_{CC}				
1	I_{IL}	3009	35	0.5 V	5.5 V	GND	5.5 V	5.5 V		GND		5.5 V	5.5 V	GND	5.5 V	5.5 V	5.5 V	1A	-1	-2	mA
T_C = 25°C		"	36	5.5 V	0.5 V	"	5.5 V	"		"		"	"	"	"	"	"	1B	"	"	"
		"	37	"	5.5 V	"	0.5 V	"		"		"	"	"	"	"	"	1C	"	"	"
		"	38	"	"	"	5.5 V	0.5 V		"		"	"	"	"	"	"	1D	"	"	"
		"	39	"	"	"	"	5.5 V		"		0.5 V	"	"	"	"	"	2A	"	"	"
		"	40	"	"	"	"	"		"		5.5 V	0.5 V	"	"	"	"	2B	"	"	"
		"	41	"	"	"	"	"		"		"	5.5 V	"	0.5 V	"	"	2C	"	"	"
		"	42	"	"	"	"	"		"		"	5.5 V	"	5.5 V	0.5 V	"	2D	"	"	"
	I_{OS}	3011	43	GND	GND	"	GND	GND	GND	"				"				1Y	-40	-100 2/	"
		3011	44			"				"	GND	GND	GND	"	GND	GND	"	2Y	-40	-100 2/	"
	I_{CCH}	3005	45	GND	GND	"	GND	GND		"		GND	GND	"	GND	GND	"	V_{CC}		8	"
	I_{CCL}	3005	46	5.5 V	5.5 V	"	5.5 V	5.5 V		"		5.5 V	5.5 V	"	5.5 V	5.5 V	"	V_{CC}		18	"
	I_{CEX}			GND	GND	"	GND	GND	5.5 V	"		5.5 V	5.5 V	"	5.5 V	5.5 V	"	1Y		250	µA
	I_{CEX}		48	5.5 V	5.5 V	"	5.5 V	5.5 V		"	5.5 V	GND	GND	"	GND	GND	"	2Y		250	µA
2	Same tests, terminal conditions, and limits as for subgroup 1, except T_C = 125°C and V_{IC} tests are omitted. V_{OL} (max) = 0.45 V and V_{IL} = 0.7 V. 47																				
3	Same tests, terminal conditions, and limits as for subgroup 1, except T_C = -55°C and V_{IC} tests are omitted.																				
9	t_{PHL}	3003	49	IN	2.7 V	GND	2.7 V	2.7 V	OUT	GND		2.7 V	2.7 V	GND	2.7 V	2.7 V	5.0 V	1A to 1Y	2.0	7.5	ns
T_C = 25°C		Fig. 3	50	2.7 V	IN	"	2.7 V	"	"	"		"	"	"	"	"	"	1B to 1Y	"	"	"
		"	51	"	2.7 V	"	IN	"	"	"		"	"	"	"	"	"	1C to 1Y	"	"	"
		"	52	"	"	"	2.7 V	IN	"	"		"	"	"	"	"	"	1D to 1Y	"	"	"
		"	53	"	"	"	"	2.7 V		"	OUT	IN	"	"	"	"	"	2A to 2Y	"	"	"
		"	54	"	"	"	"	"		"	"	2.7 V	IN	"	"	"	"	2B to 2Y	"	"	"
		"	55	"	"	"	"	"		"	"	"	2.7 V	"	IN	"	"	2C to 2Y	"	"	"
		"	56	"	"	"	"	"		"	"	"	"	"	2.7 V	IN	"	2D to 2Y	"	"	"
	t_{PLH}	"	57	IN	"	"	"	"	OUT	"		"	"	"	"	2.7 V	"	1A to 1Y	"	7.0	"
		"	58	2.7 V	IN	"	"	"	"	"		"	"	"	"	"	"	1B to 1Y	"	"	"
		"	59	"	2.7 V	"	IN	"	"	"		"	"	"	"	"	"	1C to 1Y	"	"	"
		"	60	"	"	"	2.7 V	IN	"	"		"	"	"	"	"	"	1D to 1Y	"	"	"
		"	61	"	"	"	"	2.7 V		"	OUT	IN	"	"	"	"	"	2A to 2Y	"	"	"
		"	62	"	"	"	"	"		"	"	2.7 V	IN	"	"	"	"	2B to 2Y	"	"	"
		"	63	"	"	"	"	"		"	"	"	2.7 V	"	IN	"	"	2C to 2Y	"	"	"
		"	64	"	"	"	"	"		"	"	"	"	"	2.7 V	IN	"	2D to 2Y	"	"	"

TABLE III. Group A inspection for device type 06 – Continued.
Terminal conditions (pins not designated may be high ≥ 2.0 V, low ≤ 0.8 V, or open)

Subgroup	Symbol	MIL-STD-883 method	Cases X,2 1/	2	3	4	6	8	9	10	12	13	14	16	18	19	20	Measured terminal	Test limits		Unit
			Cases A, B, C, D	1	2	3	4	5	6	7	8	9	10	11	12	13	14		Min	Max	
			Test no.	1A	1B	NC	1C	1D	1Y	GND	2Y	2A	2B	NC	2C	2D	V_{CC}				
10	t_{PHL}	3003	65	IN	2.7 V	GND	2.7 V	2.7 V	OUT	GND		2.7 V	2.7 V	GND	2.7 V	2.7 V	5.0 V	1A to 1Y	2.0	9.0	ns
T_C = 125°C		Fig. 3	66	2.7 V	IN	“	“	“	“	“		“	“	“	“	“	“	1B to 1Y	“	“	“
		“	67	“	2.7 V	“	IN	“	“	“		“	“	“	“	“	“	1C to 1Y	“	“	“
		“	68	“	“	“	2.7 V	IN	“	“		“	“	“	“	“	“	1D to 1Y	“	“	“
		“	69	“	“	“	“	2.7 V		“	OUT	IN	“	“	“	“	“	2A to 2Y	“	“	“
		“	70	“	“	“	“	“		“	“	2.7 V	IN	“	“	“	“	2B to 2Y	“	“	“
		“	71	“	“	“	“	“		“	“	“	2.7 V	“	IN	“	“	2C to 2Y	“	“	“
		“	72	“	“	“	“	“		“	“	“	“	“	2.7 V	IN	“	2D to 2Y	“	“	“
	t_{PLH}	“	73	IN	“	“	“	“	OUT	“		“	“	“	“	2.7 V	“	1A to 1Y	“	“	“
		“	74	2.7 V	IN	“	“	“	“	“		“	“	“	“	“	“	1B to 1Y	“	“	“
		“	75	“	2.7 V	“	IN	“	“	“		“	“	“	“	“	“	1C to 1Y	“	“	“
		“	76	“	“	“	2.7 V	IN	“	“		“	“	“	“	“	“	1D to 1Y	“	“	“
		“	77	“	“	“	“	2.7 V		“	OUT	IN	“	“	“	“	“	2A to 2Y	“	“	“
		“	78	“	“	“	“	“		“	“	2.7 V	IN	“	“	“	“	2B to 2Y	“	“	“
		“	79	“	“	“	“	“		“	“	“	2.7 V	“	IN	“	“	2C to 2Y	“	“	“
		“	80	“	“	“	“	“		“	“	“	2.7 V	“	2.7 V	IN	“	2D to 2Y	“	“	“
11	Same tests, terminal conditions, and limits as for subgroup 10, except T_C = -55°C.																				

1/ Case X and 2 terminals not designated are NC.
2/ For circuit C, I_{OS} maximum test limits = -110 mA.

TABLE III. Group A inspection for device type 07.
Terminal conditions (pins not designated may be high ≥ 2.0 V, low ≤ 0.8 V, or open)

Subgroup	Symbol	MIL-STD-883 method	Cases A, B, C, D	1	2	3	4	5	6	7	8	9	10	11	12	13	14	Measured terminal	Test limits		Unit
			Test no.	1A	1B	NC	1C	1D	1Y	GND	2Y	2A	2B	NC	2C	2D	V_{CC}		Min	Max	
1	V_{OL}	3007	1	2.0 V	2.0 V	GND	2.0 V	2.0 V	20 mA	GND		GND	GND	GND	GND	GND	4.5 V	1Y	0.2	0.5	V
T_C = 25°C			2	GND	GND	“	GND	GND		“	20 mA	2.0 V	2.0 V	“	2.0 V	2.0 V	“	2Y	0.2	0.5	V
	I_{CEX}		3	GND	5.5 V	“	5.5 V	5.5 V	5.5 V	“		5.5 V	5.5 V	“	5.5 V	5.5 V	“	1Y		250	µA
	3007		4	5.5 V	GND	“	5.5 V	“	“	“		“	“	“	“	“	“	1Y		“	“
			5	“	5.5 V	“	GND	“	“	“		“	“	“	“	“	“	1Y		“	“
			6	“	“	“	5.5 V	GND	“	“		“	“	“	“	“	“	1Y		“	“
			7	“	“	“	“	5.5 V		“	5.5 V	GND	“	“	“	“	“	2Y		“	“
			8	“	“	“	“	“		“	“	5.5 V	GND	“	“	“	“	2Y		“	“
			9	“	“	“	“	“		“	“	“	5.5 V	“	GND	“	“	2Y		“	“
			10	“	“	“	“	“		“	“	“	5.5 V	“	5.5 V	GND	“	2Y		“	“
	V_{IC}		11	-18 mA		“				“				“			“	1A		-1.2	V
			12		-18 mA	“				“				“			“	1B		“	“
			13			“	-18 mA			“				“			“	1C		“	“
			14			“		-18 mA		“				“				1D		“	“
			15			“				“		-18 mA		“				2A		“	“
			16			“				“			-18 mA	“				2B		“	“
			17			“				“				“	-18 mA	“	“	2C		“	“
			18			“				“				“		-18 mA	“	2D		“	“
	I_{IH1}	3010	19	2.7 V	GND	“	GND	GND		“		GND	GND	“	GND	GND	5.5 V	1A		50	µA
		“	20	GND	2.7 V	“	GND	“		“		“	“	“	“	“	“	1B		“	“
		“	21	“	GND	“	2.7 V	“		“		“	“	“	“	“	“	1C		“	“
		“	22	“	“	“	GND	2.7 V		“		“	“	“	“	“	“	1D		“	“
		“	23	“	“	“	“	GND		“		2.7 V	“	“	“	“	“	2A		“	“
		“	24	“	“	“	“	“		“		GND	2.7 V	“	“	“	“	2B		“	“
		“	25	“	“	“	“	“		“		“	GND	“	2.7 V	“	“	2C		“	“
		“	26	“	“	“	“	“		“		“	“	“	GND	2.7 V	“	2D		“	“
	I_{IH2}	“	27	5.5 V	“	“	“	“		“		“	“	“	“	GND	“	1A		1	mA
		“	28	GND	5.5 V	“	“	“		“		“	“	“	“	“	“	1B		“	“
		“	29	“	GND	“	5.5 V	“		“		“	“	“	“	“	“	1C		“	“
		“	30	“	“	“	GND	5.5 V		“		“	“	“	“	“	“	1D		“	“
		“	31	“	“	“	“	GND		“		5.5 V	“	“	“	“	“	2A		“	“
		“	32	“	“	“	“	“		“		GND	5.5 V	“	“	“	“	2B		“	“
		“	33	“	“	“	“	“		“		“	GND	“	5.5 V	“	“	2C		“	“
		“	34	“	“	“	“	“		“			GND	“	GND	5.5 V	“	2D		“	“

“

TABLE III. Group A inspection for device type 07 – Continued.
Terminal conditions (pins not designated may be high ≥ 2.0 V, low ≤ 0.8 V, or open)

Subgroup	Symbol	MIL-STD-883 method	Cases A, B, C, D	1	2	3	4	5	6	7	8	9	10	11	12	13	14	Measured terminal	Test limits		Unit
			Test no.	1A	1B	NC	1C	1D	1Y	GND	2Y	2A	2B	NC	2C	2D	V_{CC}		Min	Max	
1	I_{IL}	3009	35	0.5 V	5.5 V	GND	5.5 V	5.5 V		GND		5.5 V	5.5 V	GND	5.5 V	5.5 V	5.5 V	1A	-1	-2	mA
T_C = 25°C		"	36	5.5 V	0.5 V	"	5.5 V	"		"		"	"	"	"	"	"	1B	"	"	"
		"	37	"	5.5 V	"	0.5 V	"		"		"	"	"	"	"	"	1C	"	"	"
		"	38	"	"	"	5.5 V	0.5 V		"		"	"	"	"	"	"	1D	"	"	"
		"	39	"	"	"	"	5.5 V		"		0.5 V	"	"	"	"	"	2A	"	"	"
		"	40	"	"	"	"	"		"		5.5 V	0.5 V	"		"	"	2B	"	"	"
		"	41	"	"	"	"	"		"		"	5.5 V	"	0.5 V	"	"	2C	"	"	"
		"	42	"	"	"	"	"		"		"	"	"	5.5 V	0.5 V	"	2D	"	"	"
	I_{CCL}	3005	43	"	"	"	"	"		"		"	"	"	5.5 V	5.5 V	"	V_{CC}	"	18	"
	I_{CCH}	3005	44	GND	GND	"	GND	GND		"		GND	GND	"	GND	GND	"	V_{CC}	"	6.6	"
2	Same tests, terminal conditions, and limits as for subgroup 1, except T_C = 125°C and V_{IC} tests are omitted. V_{OL} (max) = 0.45 V.																				
3	Same tests, terminal conditions, and limits as for subgroup 1, except T_C = -55°C and V_{IC} tests are omitted.																				
9	t_{PHL}	3003	45	IN	2.7 V	GND	2.7 V	2.7 V	OUT	GND		2.7 V	2.7 V	GND	2.7 V	2.7 V	5.0 V	1A to 1Y	2.0	11.5	ns
T_C = 25°C		Fig. 3	46	2.7 V	IN	"	2.7 V	"	"	"		"	"	"	"	"	"	1B to 1Y	"	"	"
		"	47	"	2.7 V	"	IN	"	"	"		"	"	"	"	"	"	1C to 1Y	"	"	"
		"	48	"	"	"	2.7 V	IN	"	"		"	"	"	"	"	"	1D to 1Y	"	"	"
		"	49	"	"	"	"	2.7 V		"	OUT	IN	"	"	"	"	"	2A to 2Y	"	"	"
		"	50	"	"	"	"	"		"	"	2.7 V	IN	"	"	"	"	2B to 2Y	"	"	"
		"	51	"	"	"	"	"		"	"	"	2.7 V	"	IN	"	"	2C to 2Y	"	"	"
		"	52	"	"	"	"	"		"	"	"	"	"	2.7 V	IN	"	2D to 2Y	"	"	"
	t_{PLH}	"	53	IN	"	"	"	"	OUT	"		"	"	"	"	2.7 V	"	1A to 1Y	"	12.0	"
		"	54	2.7 V	IN	"	"	"	"	"		"	"	"	"	"	"	1B to 1Y	"	"	"
		"	55	"	2.7 V	"	IN	"	"	"		"	"	"	"	"	"	1C to 1Y	"	"	"
		"	56	"	"	"	2.7 V	IN	"	"		"	"	"	"	"	"	1D to 1Y	"	"	"
		"	57	"	"	"	"	2.7 V		"	OUT	IN	"	"	"	"	"	2A to 2Y	"	"	"
		"	58	"	"	"	"	"		"	"	2.7 V	IN	"	"	"	"	2B to 2Y	"	"	"
		"	59	"	"	"	"	"		"	"	"	2.7 V	"	IN	"	"	2C to 2Y	"	"	"
		"	60	"	"	"	"	"		"	"	"	"	"	2.7 V	IN	"	2D to 2Y	"	"	"

TABLE III. Group A inspection for device type 07 – Continued.
Terminal conditions (pins not designated may be high ≥ 2.0 V, low ≤ 0.8 V, or open)

Subgroup	Symbol	MIL-STD-883 method	Cases A, B, C, D	1	2	3	4	5	6	7	8	9	10	11	12	13	14	Measured terminal	Test limits		Unit
			Test no.	1A	1B	NC	1C	1D	1Y	GND	2Y	2A	2B	NC	2C	2D	V_{CC}		Min	Max	
10	t_{PHL}	3003	61	IN	2.7 V	GND	2.7 V	2.7 V	OUT	GND		2.7 V	2.7 V	GND	2.7 V	2.7 V	5.0 V	1A to 1Y	2.0	14.0	ns
T_C = 125°C		Fig. 3	62	2.7 V	IN	“	2.7 V	“	“	“		“	“	“	“	“	“	1B to 1Y	“	“	“
		“	63	“	2.7 V	“	IN	“	“	“		“	“	“	“	“	“	1C to 1Y	“	“	“
		“	64	“	“	“	2.7 V	IN	“	“		“	“	“	“	“	“	1D to 1Y	“	“	“
		“	65	“	“	“	“	2.7 V		“	OUT	IN	“	“	“	“	“	2A to 2Y	“	“	“
		“	66	“	“	“	“	“		“	“	2.7 V	IN	“	“	“	“	2B to 2Y	“	“	“
		“	67	“	“	“	“	“		“	“	“	2.7 V	“	IN	“	“	2C to 2Y	“	“	“
		“	68	“	“	“	“	“		“	“	“	“	“	2.7 V	IN	“	2D to 2Y	“	“	“
	t_{PLH}	“	69	IN	“	“	“	“	OUT	“		“	“	“	“	2.7 V	“	1A to 1Y	“	“	“
		“	70	2.7 V	IN	“	“	“	“	“		“	“	“	“	“	“	1B to 1Y	“	“	“
		“	71	“	2.7 V	“	IN	“	“	“		“	“	“	“	“	“	1C to 1Y	“	“	“
		“	72	“	“	“	2.7 V	IN	“	“		“	“	“	“	“	“	1D to 1Y	“	“	“
		“	73	“	“	“	“	2.7 V		“	OUT	IN	“	“	“	“	“	2A to 2Y	“	“	“
		“	74	“	“	“	“	“		“	“	2.7 V	IN	“	“	“	“	2B to 2Y	“	“	“
		“	75	“	“	“	“	“		“	“	“	2.7 V	“	IN	“	“	2C to 2Y	“	“	“
		“	76	“	“	“	“	“		“	“	“	2.7 V	“	2.7 V	IN	“	2D to 2Y	“	“	“
11	Same tests, terminal conditions, and limits as for subgroup 10, except T_C = -55°C.																				

TABLE III. Group A inspection for device type 08.
Terminal conditions (pins not designated may be high ≥ 2.0 V, low ≤ 0.8 V, or open)

Subgroup	Symbol	MIL-STD-883 method	Cases A, B, C, D	1	2	3	4	5	6	7	8	9	10	11	12	13	14	Measured terminal	Test limits		Unit
			Test no.	A	B	C	D	E	F	GND	Y	NC	NC	G	H	NC	V_{CC}		Min	Max	
1	V_{OH}	3006	1	0.8 V	5.5 V	5.5 V	5.5 V	5.5 V	5.5 V	GND	-1 mA	GND	GND	5.5 V	5.5 V	GND	4.5 V	Y	2.5		V
T_C = 25°C		"	2	5.5 V	0.8 V	5.5 V	"	"	"	"	"	"	"	"	"	"	"	"	"		"
		"	3	"	5.5 V	0.8 V	"	"	"	"	"	"	"	"	"	"	"	"	"		"
		"	4	"	"	5.5 V	0.8 V	"	"	"	"	"	"	"	"	"	"	"	"		"
		"	5	"	"	"	5.5 V	0.8 V	"	"	"	"	"	"	"	"	"	"	"		"
		"	6	"	"	"	"	5.5 V	0.8 V	"	"	"	"	"	"	"	"	"	"		"
		"	7	"	"	"	"	"	5.5 V	"	"	"	"	0.8 V	"	"	"	"	"		"
		"	8	"	"	"	"	"	5.5 V	"	"	"	"	5.5 V	0.8 V	"	"	"	"		"
	V_{OL}	3007	9	2.0 V	2.0 V	2.0 V	2.0 V	2.0 V	2.0 V	"	20 mA	"	"	2.0 V	2.0 V	"	"	"	0.2	0.5	"
	V_{IC}		10	-18 mA						"		"	"			"	"	A		-1.2	"
			11		-18 mA					"		"	"			"	"	B		"	"
			12			-18 mA				"		"	"			"	"	C		"	"
			13				-18 mA			"		"	"			"	"	D		"	"
			14					-18 mA		"		"	"			"	"	E		"	"
			15						-18 mA	"		"	"			"	"	F		"	"
			16							"		"	"	-18 mA		"	"	G		"	"
			17							"		"	"		-18 mA	"	"	H		"	"
	I_{IH1}	3010	18	2.7 V	GND	GND	GND	GND	GND	"			"	GND	GND	"	5.5 V	A		50	μA
		"	19	GND	2.7 V	GND	"	"	"	"		"	"	"	"	"	"	B		"	"
		"	20	"	GND	2.7 V	"	"	"	"		"	"	"	"	"	"	C		"	"
		"	21	"	"	GND	2.7 V	"	"	"	"	"	"	"	"	"	"	D		"	"
		"	22	"	"	"	GND	2.7 V	"	"		"	"	"	"	"	"	E		"	"
		"	23	"	"	"	"	GND	2.7 V	"		"	"	"	"	"	"	F		"	"
		"	24	"	"	"	"	"	GND	"		"	"	2.7 V	"	"	"	G		"	"
		"	25	"	"	"	"	"	"	"		"	"	GND	2.7 V	"	"	H		"	"
	I_{IH2}	"	26	5.5 V	"	"	"	"	"	"		"	"	"	GND	"	"	A		1	mA
		"	27	GND	5.5 V	"	"	"	"	"		"	"	"	"	"	"	B		"	"
		"	28	"	GND	5.5 V	"	"	"	"		"	"	"	"	"	"	C		"	"
		"	29	"	"	GND	5.5 V	"	"	"		"	"	"	"	"	"	D		"	"
		"	30	"	"	"	GND	5.5 V	"	"		"	"	"	"	"	"	E		"	"
		"	31	"	"	"	"	GND	5.5 V	"		"	"	"	"	"	"	F		"	"
		"	32	"	"	"	"	"	GND	"		"	"	5.5 V	"	"	"	G		"	"
		"	33	"	"	"	"	"	GND	"		"	"	GND	5.5 V	"	"	H		"	"

TABLE III. Group A inspection for device type 08 – Continued.
Terminal conditions (pins not designated may be high ≥ 2.0 V, low ≤ 0.8 V, or open)

Subgroup	Symbol	MIL-STD-883 method	Cases A, B, C, D	1	2	3	4	5	6	7	8	9	10	11	12	13	14	Measured terminal	Test limits		Unit
			Test no.	A	B	C	D	E	F	GND	Y	NC	NC	G	H	NC	V_{CC}		Min	Max	
1	I_{IL}	3009	34	0.5 V	5.5 V	5.5 V	5.5 V	5.5 V	5.5 V	GND		GND	GND	5.5 V	5.5 V	GND	5.5 V	A	-1	-2	mA
T_C = 25°C		"	35	5.5 V	0.5 V	5.5 V	"	"	"	"		"	"	"	"	"	"	B	"	"	"
		"	36	"	5.5 V	0.5 V	"	"	"	"		"	"	"	"	"	"	C	"	"	"
		"	37	"	"	5.5 V	0.5 V	"	"	"		"	"	"	"	"	"	D	"	"	"
		"	38	"	"	"	5.5 V	0.5 V	"	"		"	"	"	"	"	"	E	"	"	"
		"	3(	"	"	"	"	5.5 V	0.5 V	"		"	"	"	"	"	"	F	"	"	"
		"	40	"	"	"	"	"	5.5 V	"		"	"	0.5 V	"	"	"	G	"	"	"
		"	41	"	"	"	"	"	5.5 V	"		"	"	5.5 V	0.5 V	"	"	H	"	"	"
	I_{OS}	3011	42	GND	GND	GND	GND	GND	GND	"	GND	"	"	GND	GND	"	"	Y	-40	-100 1/	"
	I_{CCH}	3005	43	GND	GND	GND	GND	GND	GND	"		"	"	GND	GND	"	"	V_{CC}		5	"
	I_{CCL}	3005	44	5.5 V	5.5 V	5.5 V	5.5 V	5.5 V	5.5 V	"		"	"	5.5 V	5.5 V	"	"	V_{CC}		10	"
	I_{CEX}		45	GND	GND	GND	GND	GND	GND	"	5.5 V	"	"	GND	GND	"	"	Y			μA
2	Same tests, terminal conditions, and limits as for subgroup 1, except T_C = 125°C and V_{IC} tests are omitted. V_{OL} (max) = 0.45 V and V_{IL} = 0.7 V.																			250	
3	Same tests, terminal conditions, and limits as for subgroup 1, except T_C = -55°C and V_{IC} tests are omitted.																				
9	t_{PHL}	3003	46	IN	2.7 V	2.7 V	2.7 V	2.7 V	2.7 V	GND	OUT	GND	GND	2.7 V	2.7 V	GND	5.0 V	A to Y	2.0	9.0	ns
T_C = 25°C		Fig. 3	47	2.7 V	IN	2.7 V	"	"	"	"	"	"	"	"	"	"	"	B to Y	"	"	"
		"	48	"	2.7 V	IN	"	"	"	"	"	"	"	"	"	"	"	C to Y	"	"	"
		"	49	"	"	2.7 V	IN	"	"	"	"	"	"	"	"	"	"	D to Y	"	"	"
		"	50	"	"	"	2.7 V	IN	"	"	"	"	"	"	"	"	"	E to Y	"	"	"
		"	51	"	"	"	"	2.7 V	IN	"	"	"	"	"	"	"	"	F to Y	"	"	"
		"	52	"	"	"	"	"	2.7 V	"	"	"	"	IN	"	"	"	G to Y	"	"	"
		"	53	"	"	"	"	"	"	"	"	"	"	2.7 V	IN	"	"	H to Y	"	"	"
	t_{PLH}	"	54	IN	"	"	"	"	"	"	"	"	"	"	2.7 V	"	"	A to Y	"	7.5	"
		"	55	2.7 V	IN	"	"	"	"	"	"	"	"	"	"	"	"	B to Y	"	"	"
		"	56	"	2.7 V	IN	"	"	"	"	"	"	"	"	"	"	"	C to Y	"	"	"
		"	57	"	"	2.7 V	IN	"	"	"	"	"	"	"	"	"	"	D to Y	"	"	"
		"	58	"	"	"	2.7 V	IN	"	"	"	"	"	"	"	"	"	E to Y	"	"	"
		"	59	"	"	"	"	2.7 V	IN	"	"	"	"	"	"	"	"	F to Y	"	"	"
		"	60	"	"	"	"	"	2.7 V	"	"	"	"	IN	"	"	"	G to Y	"	"	"
		"	61	"	"	"	"	"	"	"	"	"	"	2.7 V	IN	"	"	H to Y	"	"	"

TABLE III. Group A inspection for device type 08 – Continued.
Terminal conditions (pins not designated may be high ≥ 2.0 V, low ≤ 0.8 V, or open)

Subgroup	Symbol	MIL-STD-883 method	Cases A, B, C, D	1	2	3	4	5	6	7	8	9	10	11	12	13	14	Measured terminal	Test limits		Unit
			Test no.	A	B	C	D	E	F	GND	Y	NC	NC	G	H	NC	V_{CC}		Min	Max	
10	t_{PHL}	3003	62	IN	2.7 V	2.7 V	2.7 V	2.7 V	2.7 V	GND	OUT	GND	GND	2.7 V	2.7 V	GND	5.0 V	A to Y	2.0	10.0	ns
T_C = 125°C		Fig. 3	63	2.7 V	IN	2.7 V	"	"	"	"	"	"	"	"	"	"	"	B to Y	"	"	"
		"	64	"	2.7 V	IN	"	"	"	"	"	"	"	"	"	"	"	C to Y	"	"	"
		"	65	"	"	2.7 V	IN	"	"	"	"	"	"	"	"	"	"	D to Y	"	"	"
		"	66	"	"	"	2.7 V	IN	"	"	"	"	"	"	"	"	"	E to Y	"	"	"
		"	67	"	"	"	"	2.7 V	IN	"	"	"	"	"	"	"	"	F to Y	"	"	"
		"	68	"	"	"	"	"	2.7 V	"	"	"	"	IN	"	"	"	G to Y	"	"	"
		"	69	"	"	"	"	"	"	"	"	"	"	2.7 V	IN	"	"	H to Y	"	"	"
	t_{PLH}	"	70	IN	"	"	"	"	"	"	"	"	"	"	2.7 V	"	"	A to Y	"	9.0	"
		"	71	2.7 V	IN	"	"	"	"	"	"	"	"	"	"	"	"	B to Y	"	"	"
		"	72	"	2.7 V	IN	"	"	"	"	"	"	"	"	"	"	"	C to Y	"	"	"
		"	73	"	"	2.7 V	IN	"	"	"	"	"	"	"	"	"	"	D to Y	"	"	"
		"	74	"	"	"	2.7 V	IN	"	"	"	"	"	"	"	"	"	E to Y	"	"	"
		"	75	"	"	"	"	2.7 V	IN	"	"	"	"	"	"	"	"	F to Y	"	"	"
		"	76	"	"	"	"	"	2.7 V	"	"	"	"	IN	"	"	"	G to Y	"	"	"
		"	77	"	"	"	"	"	2.7 V	"	"	"	"	2.7 V	IN	"	"	H to Y	"	"	"
11	Same tests, terminal conditions, and limits as for subgroup 10, except T_C = -55°C.																				

1/ For circuit C, I_{OS} maximum test limits = -110 mA.

TABLE III. Group A inspection for device type 09.

Terminal conditions (pins not designated may be high ≥ 2.0 V, low ≤ 0.8 V, or open)

Subgroup	Symbol	MIL-STD-883 method	Cases X, 2 1/	2	3	4	5	7	8	9	10	12	13	14	15	17	18	19	20	Measured terminal	Test limits		Unit
			Cases E, F	1	2	3	4	5	6	7	8	9	10	11	12	13	14	15	16		Min	Max	
			Test no.	A	B	C	D	E	F	G	GND	Y	H	I	J	K	L	M	V_{CC}				
1	V_{OH}	3006	1	0.8 V	5.5 V	5.5 V	5.5 V	5.5 V	5.5 V	5.5 V	GND	-1 mA	5.5 V	5.5 V	5.5 V	5.5 V	5.5 V	5.5 V	4.5 V	Y	2.5		V
T_C = 25°C		"	2	5.5 V	0.8 V	5.5 V	"	"	"	"	"	"	"	"	"	"	"	"	"	"	"		"
		"	3	"	5.5 V	0.8 V	"	"	"	"	"	"	"	"	"	"	"	"	"	"	"		"
		"	4	"	"	5.5 V	0.8 V	"	"	"	"	"	"	"	"	"	"	"	"	"	"		"
		"	5	"	"	"	5.5 V	0.8 V	"	"	"	"	"	"	"	"	"	"	"	"	"		"
		"	6	"	"	"	"	5.5 V	0.8 V	"	"	"	"	"	"	"	"	"	"	"	"		"
		"	7	"	"	"	"	"	5.5 V	0.8 V	"	"	"	"	"	"	"	"	"	"	"		"
		"	8	"	"	"	"	"	"	5.5 V	"	"	0.8 V	"	"	"	"	"	"	"	"		"
		"	9	"	"	"	"	"	"	"	"	"	5.5 V	0.8 V	"	"	"	"	"	"	"		"
		"	10	"	"	"	"	"	"	"	"	"	"	5.5 V	0.8 V		"	"	"	"	"		"
		"	11	"	"	"	"	"	"	"	"	"	"	"	5.5 V	0.8 V	"	"	"	"	"		"
		"	12	"	"	"	"	"	"	"	"	"	"	"	"	5.5 V	0.8 V	"	"	"	"		"
		"	13	"	"	"	"	"	"	"	"	"	"	"	"	5.5 V	5.5 V	0.8 V	"	"	"		"
	V_{OL}	3007	14	2.0 V	2.0 V	2.0 V	2.0 V	2.0 V	2.0 V	2.0 V	"	20 mA	2.0 V	2.0 V	2.0 V	2.0 V	2.0 V	2.0 V	"	"	0.2	0.5	"
	V_{IC}		15	-18 mA							"								"	A		-1.2	"
			16		-18 mA						"								"	B		"	"
			17			-18 mA					"								"	C		"	"
			18				-18 mA				"								"	D		"	"
			19					-18 mA			"								"	E		"	"
			20						-18 mA		"								"	F		"	"
			21							-18 mA	"								"	G		"	"
			22								"		-18 mA						"	H		"	"
			23								"			-18 mA					"	I		"	"
			24								"				-18 mA				"	J		"	"
			25								"					-18 mA			"	K		"	"
			26								"						-18 mA		"	L		"	"
			27								"							-18 mA	"	M		"	"
	I_{IH1}	3010	28	2.7 V	GND	GND	GND	GND	GND	GND	"		GND	GND	GND	GND	GND	GND	5.5 V	A		50	μA
		"	29	GND	2.7 V	GND	"	"	"	"	"		"	"	"	"	"	"	"	B		"	"
		"	30	"	GND	2.7 V	"	"	"	"	"		"	"	"	"	"	"	"	C		"	"
		"	31	"	"	GND	2.7 V	"	"	"	"		"	"	"	"	"	"	"	D		"	"
		"	32	"	"	"	GND	2.7 V	"	"	"		"	"	"	"	"	"	"	E		"	"
		"	33	"	"	"	"	GND	2.7 V	"	"		"	"	"	"	"	"	"	F		"	"
		"	34	"	"	"	"	"	GND	2.7 V	"		"	"	"	"	"	"	"	G		"	"
		"	35	"	"	"	"	"	"	GND	"		2.7 V	"	"	"	"	"	"	H		"	"
		"	36	"	"	"	"	"	"	"	"		GND	2.7 V	"	"	"	"	"	I		"	"
		"	37	"	"	"	"	"	"	"	"		"	GND	2.7 V	"	"	"	"	J		"	"
		"	38	"	"	"	"	"	"	"	"		"	"	GND	2.7 V	"	"	"	K		"	"
		"	39	"	"	"	"	"	"	"	"		"	"	"	GND	2.7 V	"	"	L		"	"
		"	40	"	"	"	"	"	"	"	"		"	"	"	"	GND	2.7 V	"	M		"	"

See footnotes at end of table.

TABLE III. Group A inspection for device type 09 - Continued.
Terminal conditions (pins not designated may be high ≥ 2.0 V, low ≤ 0.8 V, or open)

Subgroup	Symbol	MIL-STD-883 method	Cases X, 2 1/	2	3	4	5	7	8	9	10	12	13	14	15	17	18	19	20	Measured terminal	Test limits Min	Test limits Max	Unit
			Cases E, F	1	2	3	4	5	6	7	8	9	10	11	12	13	14	15	16				
			Test no.	A	B	C	D	E	F	G	GND	Y	H	I	J	K	L	M	V_{CC}				
	I_{IH2}	"	41	5.5 V	GND	GND	GND	GND	GND	GND	GND		GND	GND	GND	GND	GND	GND	5.5 V	A		1	mA
		"	42	GND	5.5 V	"	"	"	"	"	"		"	"	"	"	"	"	"	B		"	"
		"	43	"	GND	5.5 V	"	"	"	"	"		"	"	"	"	"	"	"	C		"	"
		"	44	"	"	GND	5.5 V	"	"	"	"		"	"	"	"	"	"	"	D		"	"
		"	45	"	"	"	GND	5.5 V	"	"	"		"	"	"	"	"	"	"	E		"	"
		"	46	"	"	"	"	GND	5.5 V	"	"		"	"	"	"	"	"	"	F		"	"
		"	47	"	"	"	"	"	GND	5.5 V	"		"	"	"	"	"	"	"	G		"	"
		"	48	"	"	"	"	"	"	GND	"		5.5 V	"	"	"	"	"	"	H		"	"
		"	49	"	"	"	"	"	"	"	"		GND	5.5 V	"	"	"	"	"	I		"	"
		"	50	"	"	"	"	"	"	"	"		"	GND	5.5 V	"	"	"	"	J		"	"
		"	51	"	"	"	"	"	"	"	"		"	"	GND	5.5 V	"	"	"	K		"	"
		"	52	"	"	"	"	"	"	"	"		"	"	"	GND	5.5 V	"	"	L		"	"
		"	53	"	"	"	"	"	"	"	"		"	"	"	"	GND	5.5 V	"	M		"	"
1	I_{CEX}		54	GND	GND	GND	GND	GND	GND	GND	"	5.5 V	GND	GND	GND	GND	GND	GND	"	Y		250	µA
T_C = 25°C	I_{IL}	3009	55	0.5 V	5.5 V	5.5 V	5.5 V	5.5 V	5.5 V	5.5 V	"		5.5 V	5.5 V	5.5 V	5.5 V	5.5 V	5.5 V	"	A	-1	-2	mA
		"	56	5.5 V	0.5 V	5.5 V	"	"	"	"	"		"	"	"	"	"	"	"	B	"	"	"
		"	57	"	5.5 V	0.5 V	"	"	"	"	"		"	"	"	"	"	"	"	C	"	"	"
		"	58	"	"	5.5 V	0.5 V	"	"	"	"		"	"	"	"	"	"	"	D	"	"	"
		"	59	"	"	"	5.5 V	0.5 V	"	"	"		"	"	"	"	"	"	"	E	"	"	"
		"	60	"	"	"	"	5.5 V	0.5 V	"	"		"	"	"	"	"	"	"	F	"	"	"
		"	61	"	"	"	"	"	5.5 V	0.5 V	"		"	"	"	"	"	"	"	G	"	"	"
		"	62	"	"	"	"	"	"	5.5 V	"		0.5 V	"	"	"	"	"	"	H	"	"	"
		"	63	"	"	"	"	"	"	"	"		5.5 V	0.5 V	"	"	"	"	"	I	"	"	"
		"	64	"	"	"	"	"	"	"	"		"	5.5 V	0.5 V	"	"	"	"	J	"	"	"
		"	65	"	"	"	"	"	"	"	"		"	"	5.5 V	0.5 V	"	"	"	K	"	"	"
		"	66	"	"	"	"	"	"	"	"		"	"	"	5.5 V	0.5 V	"	"	L	"	"	"
		"	67	"	"	"	"	"	"	"	"		"	"	"	5.5 V	5.5 V	0.5 V	"	M	"	"	"
	I_{OS}	3011	68	GND	GND	GND	GND	GND	GND	GND	"	GND	GND	GND	GND	GND	GND	GND	"	Y	-40	-100 2/	"
	I_{CCH}	3005	69	GND	GND	GND	GND	GND	GND	GND	"		GND	GND	GND	GND	GND	GND	"	V_{CC}		5	"
	I_{CCL}	3005	70	5.5 V	5.5 V	5.5 V	5.5 V	5.5 V	5.5 V	5.5 V	"		5.5 V	5.5 V	5.5 V	5.5 V	5.5 V	5.5 V	"	V_{CC}		10	"
2	Same tests, terminal conditions, and limits as for subgroup 1, except T_C = 125°C and V_{IC} tests are omitted. V_{OL} (max) = 0.45 V and V_{IL} = 0.7 V.																						
3	Same tests, terminal conditions, and limits as for subgroup 1, except T_C = -55°C and V_{IC} tests are omitted.																						

See footnotes at end of table.

TABLE III. Group A inspection for device type 09 - Continued.
Terminal conditions (pins not designated may be high ≥ 2.0 V, low ≤ 0.8 V, or open)

Subgroup	Symbol	MIL-STD-883 method	Cases X, 2 1/	2	3	4	5	7	8	9	10	12	13	14	15	17	18	19	20	Measured terminal	Test limits		Unit
			Cases E, F	1	2	3	4	5	6	7	8	9	10	11	12	13	14	15	16				
			Test no.	A	B	C	D	E	F	G	GND	Y	H	I	J	K	L	M	V_{CC}		Min	Max	
9	t_{PHL}	3003	71	IN	2.7 V	2.7 V	2.7 V	2.7 V	2.7 V	2.7 V	GND	OUT	2.7 V	2.7 V	2.7 V	2.7 V	2.7 V	2.7 V	5.0 V	A to Y	2.0	11.0	ns
T_C = 25°C		Fig. 3	72	2.7 V	IN	2.7 V	“	“	“	“	“	“	“	“	“	“	“	“	“	B to Y	“	“	“
		“	73	“	2.7 V	IN	“	“	“	“	“	“	“	“	“	“	“	“	“	C to Y	“	“	“
		“	74	“	“	2.7 V	IN	“	“	“	“	“	“	“	“	“	“	“	“	D to Y	“	“	“
		“	75	“	“	“	2.7 V	IN	“	“	“	“	“	“	“	“	“	“	“	E to Y	“	“	“
		“	76	“	“	“	“	2.7 V	IN	“	“	“	“	“	“	“	“	“	“	F to Y	“	“	“
		“	77	“	“	“	“	“	2.7 V	IN	“	“	“	“	“	“	“	“	“	G to Y	“	“	“
		“	78	“	“	“	“	“	“	2.7 V	“	“	IN	“	“	“	“	“	“	H to Y	“	“	“
		“	79	“	“	“	“	“	“	“	“	“	2.7 V	IN	“	“	“	“	“	I to Y	“	“	“
		“	80	“	“	“	“	“	“	“	“	“	“	2.7 V	IN	“	“	“	“	J to Y	“	“	“
		“	81	“	“	“	“	“	“	“	“	“	“	“	2.7 V	IN	“	“	“	K to Y	“	“	“
		“	82	“	“	“	“	“	“	“	“	“	“	“	“	2.7 V	IN	“	“	L to Y	“	“	“
		“	83	“	“	“	“	“	“	“	“	“	“	“	“	“	2.7 V	IN	“	M to Y	“	“	“
	t_{PLH}	“	84	IN	“	“	“	“	“	“	“	“	“	“	“	“	“	“	“	A to Y	“	7.5	“
		“	85	2.7 V	IN	“	“	“	“	“	“	“	“	“	“	“	“	“	“	B to Y	“	“	“
		“	86	“	2.7 V	IN	“	“	“	“	“	“	“	“	“	“	“	“	“	C to Y	“	“	“
		“	87	“	“	2.7 V	IN	“	“	“	“	“	“	“	“	“	“	“	“	D to Y	“	“	“
		“	88	“	“	“	2.7 V	IN	“	“	“	“	“	“	“	“	“	“	“	E to Y	“	“	“
		“	89	“	“	“	“	2.7 V	IN	“	“	“	“	“	“	“	“	“	“	F to Y	“	“	“
		“	90	“	“	“	“	“	2.7 V	IN	“	“	“	“	“	“	“	“	“	G to Y	“	“	“
		“	91	“	“	“	“	“	“	2.7 V	“	“	IN	“	“	“	“	“	“	H to Y	“	“	“
		“	92	“	“	“	“	“	“	“	“	“	2.7 V	IN	“	“	“	“	“	I to Y	“	“	“
		“	93	“	“	“	“	“	“	“	“	“	“	2.7 V	IN	“	“	“	“	J to Y	“	“	“
		“	94	“	“	“	“	“	“	“	“	“	“	“	2.7 V	IN	“	“	“	K to Y	“	“	“
		“	95	“	“	“	“	“	“	“	“	“	“	“	“	2.7 V	IN	“	“	L to Y	“	“	“
		“	96	“	“	“	“	“	“	“	“	“	“	“	“	2.7 V	2.7 V	IN	“	M to Y	“	“	“

See footnotes at end of table.

TABLE III. Group A inspection for device type 09 - Continued.
Terminal conditions (pins not designated may be high ≥ 2.0 V, low ≤ 0.8 V, or open)

			Cases X, 2 1/	2	3	4	5	7	8	9	10	12	13	14	15	17	18	19	20				
Subgroup	Symbol	MIL-STD-883 method	Cases E, F	1	2	3	4	5	6	7	8	9	10	11	12	13	14	15	16	Measured terminal	Test limits		Unit
			Test no.	A	B	C	D	E	F	G	GND	Y	H	I	J	K	L	M	V_{CC}		Min	Max	
10	t_{PHL}	3003	97	IN	2.7 V	2.7 V	2.7 V	2.7 V	2.7 V	2.7 V	GND	OUT	2.7 V	2.7 V	2.7 V	2.7 V	2.7 V	2.7 V	5.0 V	A to Y	2.0	12.0	ns
T_C = 125°C		Fig. 3	98	2.7 V	IN	2.7 V	"	"	"	"	"	"	"	"	"	"	"	"	"	B to Y	"	"	"
		"	99	"	2.7 V	IN	"	"	"	"	"	"	"	"	"	"	"	"	"	C to Y	"	"	"
		"	100	"	"	2.7 V	IN	"	"	"	"	"	"	"	"	"	"	"	"	D to Y	"	"	"
		"	101	"	"	"	2.7 V	IN	"	"	"	"	"	"	"	"	"	"	"	E to Y	"	"	"
		"	102	"	"	"	"	2.7 V	IN	"	"	"	"	"	"	"	"	"	"	F to Y	"	"	"
		"	103	"	"	"	"	"	2.7 V	IN	"	"	"	"	"	"	"	"	"	G to Y	"	"	"
		"	104	"	"	"	"	"	"	2.7 V	"	"	IN	"	"	"	"	"	"	H to Y	"	"	"
		"	105	"	"	"	"	"	"	"	"	"	2.7 V	IN	"	"	"	"	"	I to Y	"	"	"
		"	106	"	"	"	"	"	"	"	"	"	"	2.7 V	IN	"	"	"	"	J to Y	"	"	"
		"	107	"	"	"	"	"	"	"	"	"	"	"	2.7 V	IN	"	"	"	K to Y	"	"	"
		"	108	"	"	"	"	"	"	"	"	"	"	"	"	2.7 V	IN	"	"	L to Y	"	"	"
		"	109	"	"	"	"	"	"	"	"	"	"	"	"	"	2.7 V	IN	"	M to Y	"	"	"
	t_{PLH}	"	110	IN	"	"	"	"	"	"	"	"	"	"	"	"	"	"	"	A to Y	"	9.0	"
		"	111	2.7 V	IN	"	"	"	"	"	"	"	"	"	"	"	"	"	"	B to Y	"	"	"
		"	112	"	2.7 V	IN	"	"	"	"	"	"	"	"	"	"	"	"	"	C to Y	"	"	"
		"	113	"	"	2.7 V	IN	"	"	"	"	"	"	"	"	"	"	"	"	D to Y	"	"	"
		"	114	"	"	"	2.7 V	IN	"	"	"	"	"	"	"	"	"	"	"	E to Y	"	"	"
		"	115	"	"	"	"	2.7 V	IN	"	"	"	"	"	"	"	"	"	"	F to Y	"	"	"
		"	116	"	"	"	"	"	2.7 V	IN	"	"	"	"	"	"	"	"	"	G to Y	"	"	"
		"	117	"	"	"	"	"	"	2.7 V	"	"	IN	"	"	"	"	"	"	H to Y	"	"	"
		"	118	"	"	"	"	"	"	"	"	"	2.7 V	IN	"	"	"	"	"	I to Y	"	"	"
		"	119	"	"	"	"	"	"	"	"	"	"	2.7 V	IN	"	"	"	"	J to Y	"	"	"
		"	120	"	"	"	"	"	"	"	"	"	"	"	2.7 V	IN	"	"	"	K to Y	"	"	"
		"	121	"	"	"	"	"	"	"	"	"	"	"	"	2.7 V	IN	"	"	L to Y	"	"	"
		"	122	"	"	"	"	"	"	"	"	"	"	"	"	2.7 V	2.7 V	IN	"	M to Y	"	"	"
11	Same tests, terminal conditions, and limits as for subgroup 10, except T_C = -55°C.																						

1/ Case X and 2 terminals not designated are NC.
2/ For circuit C, I_{OS} maximum test limits = -110 mA.

TABLE III. Group A inspection for device type 10.

Terminal conditions (pins not designated may be high ≥ 2.0 V, low ≤ 0.8 V, or open)

Subgroup	Symbol	MIL-STD-883 method	Cases E, F	1	2	3	4	5	6	7	8	9	10	11	12	13	14	15	16	Measured terminal	Test limits		Unit
			Test no.	A	B	C	D	E	F	G	GND	Y	H	I	J	K	L	OC	V_{CC}		Min	Max	
1	V_{OH}	3006	1	0.8 V	5.5 V	5.5 V	5.5 V	5.5 V	5.5 V	5.5 V	GND	-2 mA	5.5 V	5.5 V	5.5 V	5.5 V	5.5 V	0.8 V	4.5 V	Y	2.4		V
T_C = 25°C		"	2	5.5 V	0.8 V	5.5 V	"	"	"	"	"	"	"	"	"	"	"	"	"	"	"		"
		"	3	"	5.5 V	0.8 V	"	"	"	"	"	"	"	"	"	"	"	"	"	"	"		"
		"	4	"	"	5.5 V	0.8 V	"	"	"	"	"	"	"	"	"	"	"	"	"	"		"
		"	5	"	"	"	5.5 V	0.8 V	"	"	"	"	"	"	"	"	"	"	"	"	"		"
		"	6	"	"	"	"	5.5 V	0.8 V	"	"	"	"	"	"	"	"	"	"	"	"		"
		"	7	"	"	"	"	"	5.5 V	0.8 V	"	"	"	"	"	"	"	"	"	"	"		"
		"	8	"	"	"	"	"	"	5.5 V	"	"	0.8 V	"	"	"	"	"	"	"	"		"
		"	9	"	"	"	"	"	"	"	"	"	5.5 V	0.8 V	"	"	"	"	"	"	"		"
		"	10	"	"	"	"	"	"	"	"	"	"	5.5 V	0.8 V		"	"	"	"	"		"
		"	11	"	"	"	"	"	"	"	"	"	"	"	5.5 V	0.8 V	"	"	"	"	"		"
		"	12	"	"	"	"	"	"	"	"	"	"	"	5.5 V	5.5 V	0.8 V	"	"	"	"		"
	V_{OL}	3007	13	2.0 V	2.0 V	2.0 V	2.0 V	2.0 V	2.0 V	2.0 V	"	20 mA	2.0 V	2.0 V	2.0 V	2.0 V	2.0 V	0.8 V	"	"	0.2	0.5	"
	V_{IC}		14	-18 mA							"								"	A		-1.2	"
			15		-18 mA						"								"	B		"	"
			16			-18 mA					"								"	C		"	"
			17				-18 mA				"								"	D		"	"
			18					-18 mA			"								"	E		"	"
			19						-18 mA		"								"	F		"	"
			20							-18 mA	"								"	G		"	"
			21								"		-18 mA						"	H		"	"
			22								"			-18 mA					"	I		"	"
			23								"				-18 mA				"	J		"	"
			24								"					-18 mA			"	K		"	"
			25								"						-18 mA		"	L		"	"
			26								"							-18 mA	"	OC		"	"
	I_{OFF1}		27	5.5 V	5.5 V	5.5 V	5.5 V	5.5 V	5.5 V	5.5 V	"	2.7 V	5.5 V	5.5 V	5.5 V	5.5 V	5.5 V	5.5 V	"	Y		50	µA
	I_{OFF2}		28	GND	GND	GND	GND	GND	GND	GND	"	0.5 V	GND	GND	GND	GND	5.5 V	"	"	Y		-50	"
	I_{IH1}	3010	29	2.7 V	GND	"	"	"	"	"	"		"	"	"	"	GND	"	5.5 V	A		50	"
		"	30	GND	2.7 V	"	"	"	"	"	"		"	"	"	"	"	"	"	B		"	"
		"	31	"	GND	2.7 V	"	"	"	"	"		"	"	"	"	"	"	"	C		"	"
		"	32	"	"	GND	2.7 V	"	"	"	"		"	"	"	"	"	"	"	D		"	"
		"	33	"	"	"	GND	2.7 V	"	"	"		"	"	"	"	"	"	"	E		"	"
		"	34	"	"	"	"	GND	2.7 V	"	"		"	"	"	"	"	"	"	F		"	"
		"	35	"	"	"	"	"	GND	2.7 V	"		"	"	"	"	"	"	"	G		"	"
		"	36	"	"	"	"	"	"	GND	"		2.7 V	"	"	"	"	"	"	H		"	"
		"	37	"	"	"	"	"	"	"	"		GND	2.7 V	"	"	"	"	"	I		"	"
		"	38	"	"	"	"	"	"	"	"		"	GND	2.7 V	"	"	"	"	J		"	"
		"	39	"	"	"	"	"	"	"	"		"	"	GND	2.7 V	"	"	"	K		"	"
		"	40	"	"	"	"	"	"	"	"		"	"	"	GND	2.7 V	"	"	L		"	"
		"	41	"	"	"	"	"	"	"	"		"	"	"	"	GND	2.7 V	"	OC		"	"

See footnotes at end of table.

TABLE III. Group A inspection for device type 10 - Continued.
Terminal conditions (pins not designated may be high ≥ 2.0 V, low ≤ 0.8 V, or open)

Subgroup	Symbol	MIL-STD-883 method	Cases E, F	1	2	3	4	5	6	7	8	9	10	11	12	13	14	15	16	Measured terminal	Test limits		Unit
			Test no.	A	B	C	D	E	F	G	GND	Y	H	I	J	K	L	OC	V_{CC}		Min	Max	
1	I_{IH2}	"	42	5.5 V	GND	GND	GND	GND	GND	GND	GND		GND	GND	GND	GND	GND	GND	5.5 V	A		1	mA
T_C = 25°C		"	43	GND	5.5 V	"	"	"	"	"	"		"	"	"	"	"	"	"	B		"	"
		"	44	"	GND	5.5 V	"	"	"	"	"		"	"	"	"	"	"	"	C		"	"
		"	45	"	"	GND	5.5 V	"	"	"	"		"	"	"	"	"	"	"	D		"	"
		"	46	"	"	"	GND	5.5 V	"	"	"		"	"	"	"	"	"	"	E		"	"
		"	47	"	"	"	"	GND	5.5 V	"	"		"	"	"	"	"	"	"	F		"	"
		"	48	"	"	"	"	"	GND	5.5 V	"		"	"	"	"	"	"	"	G		"	"
		"	49	"	"	"	"	"	"	GND	"		5.5 V	"	"	"	"	"	"	H		"	"
		"	50	"	"	"	"	"	"	"	"		GND	5.5 V	"	"	"	"	"	I		"	"
		"	51	"	"	"	"	"	"	"	"		"	GND	5.5 V	"	"	"	"	J		"	"
		"	52	"	"	"	"	"	"	"	"		"	"	GND	5.5 V	"	"	"	K		"	"
		"	53	"	"	"	"	"	"	"	"		"	"	"	GND	5.5 V	"	"	L		"	"
		"	54	"	"	"	"	"	"	"	"		"	"	"	GND	GND	5.5 V	"	OC		"	"
	I_{IL}	3009	55	0.5 V	5.5 V	5.5 V	5.5 V	5.5 V	5.5 V	5.5 V	"		5.5 V	5.5 V	5.5 V	5.5 V	5.5 V	GND	"	A	-1	-2	"
		"	56	5.5 V	0.5 V	5.5 V	"	"	"	"	"		"	"	"	"	"	"	"	B	"	"	
		"	57	"	5.5 V	0.5 V	"	"	"	"	"		"	"	"	"	"	"	"	C	"	"	"
		"	58	"	"	5.5 V	0.5 V	"	"	"	"		"	"	"	"	"	"	"	D	"	"	"
		"	59	"	"	"	5.5 V	0.5 V	"	"	"		"	"	"	"	"	"	"	E	"	"	"
		"	60	"	"	"	"	5.5 V	0.5 V	"	"		"	"	"	"	"	"	"	F	"	"	"
		"	61	"	"	"	"	"	5.5 V	0.5 V	"		"	"	"	"	"	"	"	G	"	"	"
		"	62	"	"	"	"	"	"	5.5 V	"		0.5 V	"	"	"	"	"	"	H	"	"	"
		"	63	"	"	"	"	"	"	"	"		5.5 V	0.5 V	"	"	"	"	"	I	"	"	"
		"	64	"	"	"	"	"	"	"	"		"	5.5 V	0.5 V	"	"	"	"	J	"	"	"
		"	65	"	"	"	"	"	"	"	"		"	"	5.5 V	0.5 V	"	"	"	K	"	"	"
		"	66	"	"	"	"	"	"	"	"		"	"	"	5.5 V	0.5 V	"	"	L	"	"	"
			67	"	"	"	"	"	"	"	"		"	"	"	5.5 V	5.5 V	0.5 V	"	OC	"	"	"
	I_{OS}	3011	68	GND	GND	GND	GND	GND	GND	GND	"	GND	GND	GND	GND	GND	GND	GND	"	Y	-40	-100 1/	"
	I_{CCH}	3005	69	GND	GND	GND	GND	GND	GND	GND	"		GND	GND	GND	GND	GND	GND	"	V_{CC}		13	"
	I_{CCL}	3005	70	5.5 V	5.5 V	5.5 V	5.5 V	5.5 V	5.5 V	5.5 V	"		5.5 V	5.5 V	5.5 V	5.5 V	5.5 V	GND	"	V_{CC}		16	"
	I_{CCO}	3005	71	5.5 V	5.5 V	5.5 V	5.5 V	5.5 V	5.5 V	5.5 V	"		5.5 V	5.5 V	5.5 V	5.5 V	5.5 V	5.5 V	"	V_{CC}		25	"
	I_{CEX}		72	GND	GND	GND	GND	GND	GND	GND	"	5.5 V	GND	GND	GND	GND	GND	GND	"	Y			µA
2	Same tests, terminal conditions, and limits as for subgroup 1, except T_C = 125°C and V_{IC} tests are omitted. V_{OL} (max) = 0.45 V and V_{IL} = 0.7 V.																						
3	Same tests, terminal conditions, and limits as for subgroup 1, except T_C = -55°C and V_{IC} tests are omitted.																						

See footnotes at end of table.

TABLE III. Group A inspection for device type 10 - Continued.
Terminal conditions (pins not designated may be high ≥ 2.0 V, low ≤ 0.8 V, or open)

Subgroup	Symbol	MIL-STD-883 method	Cases E, F	1	2	3	4	5	6	7	8	9	10	11	12	13	14	15	16	Measured terminal	Test limits		Unit
			Test no.	A	B	C	D	E	F	G	GND	Y	H	I	J	K	L	OC	V_{CC}		Min	Max	
9	t_{PHL}	3003	73	IN	2.7 V	2.7 V	2.7 V	2.7 V	2.7 V	2.7 V	GND	OUT	2.7 V	2.7 V	2.7 V	2.7 V	2.7 V	GND	5.0 V	A to Y	2.0	9.5	ns
T_C = 25°C		Fig. 4	74	2.7 V	IN	2.7 V	"	"	"	"	"	"	"	"	"	"	"	"	"	B to Y	"	"	"
		"	75	"	2.7 V	IN	"	"	"	"	"	"	"	"	"	"	"	"	"	C to Y	"	"	"
		"	76	"	"	2.7 V	IN	"	"	"	"	"	"	"	"	"	"	"	"	D to Y	"	"	"
		"	77	"	"	"	2.7 V	IN	"	"	"	"	"	"	"	"	"	"	"	E to Y	"	"	"
		"	78	"	"	"	"	2.7 V	IN	"	"	"	"	"	"	"	"	"	"	F to Y	"	"	"
		"	79	"	"	"	"	"	2.7 V	IN	"	"	"	"	"	"	"	"	"	G to Y	"	"	"
		"	80	"	"	"	"	"	"	2.7 V	"	"	IN	"	"	"	"	"	"	H to Y	"	"	"
		"	81	"	"	"	"	"	"	"	"	"	2.7 V	IN	"	"	"	"	"	I to Y	"	"	"
		"	82	"	"	"	"	"	"	"	"	"	"	2.7 V	IN	"	"	"	"	J to Y	"	"	"
		"	83	"	"	"	"	"	"	"	"	"	"	"	2.7 V	IN	"	"	"	K to Y	"	"	"
		"	84	"	"	"	"	"	"	"	"	"	"	"	"	2.7 V	IN	"	"	L to Y	"	"	"
	t_{PLH}	"	85	IN	"	"	"	"	"	"	"	"	"	"	"	"	2.7 V	"	"	A to Y	"	7.5	"
		"	86	2.7 V	IN	"	"	"	"	"	"	"	"	"	"	"	"	"	"	B to Y	"	"	"
		"	87	"	2.7 V	IN	"	"	"	"	"	"	"	"	"	"	"	"	"	C to Y	"	"	"
		"	88	"	"	2.7 V	IN	"	"	"	"	"	"	"	"	"	"	"	"	D to Y	"	"	"
		"	89	"	"	"	2.7 V	IN	"	"	"	"	"	"	"	"	"	"	"	E to Y	"	"	"
		"	90	"	"	"	"	2.7 V	IN	"	"	"	"	"	"	"	"	"	"	F to Y	"	"	"
		"	91	"	"	"	"	"	2.7 V	IN	"	"	"	"	"	"	"	"	"	G to Y	"	"	"
		"	92	"	"	"	"	"	"	2.7 V	"	"	IN	"	"	"	"	"	"	H to Y	"	"	"
		"	93	"	"	"	"	"	"	"	"	"	2.7 V	IN	"	"	"	"	"	I to Y	"	"	"
		"	94	"	"	"	"	"	"	"	"	"	"	2.7 V	IN	"	"	"	"	J to Y	"	"	"
		"	95	"	"	"	"	"	"	"	"	"	"	"	2.7 V	IN	"	"	"	K to Y	"	"	"
		"	96	"	"	"	"	"	"	"	"	"	"	"	2.7 V	2.7 V	IN	"	"	L to Y	"	"	"
	t_{ZH}	"	97	GND	GND	GND	GND	GND	GND	GND	"	"	GND	GND	GND	GND	GND	IN	"	OC to Y	"	19.5	"
	t_{HZ}	"	98	GND	GND	GND	GND	GND	GND	GND	"	"	GND	GND	GND	GND	GND	"	"	OC to Y	"	8.5	"
	t_{ZL}	"	99	5.0 V	5.0 V	5.0 V	5.0 V	5.0 V	5.0 V	5.0 V	"	"	5.0 V	5.0 V	5.0 V	5.0 V	5.0 V	"	"	OC to Y	"	21.0	"
	t_{LZ}	"	100	5.0 V	5.0 V	5.0 V	5.0 V	5.0 V	5.0 V	5.0 V	"	"	5.0 V	5.0 V	5.0 V	5.0 V	5.0 V	"	"	OC to Y	"	14.0	"

See footnotes at end of table.

TABLE III. Group A inspection for device type 10 - Continued.
Terminal conditions (pins not designated may be high ≥ 2.0 V, low ≤ 0.8 V, or open)

Subgroup	Symbol	MIL-STD-883 method	Cases E, F	1	2	3	4	5	6	7	8	9	10	11	12	13	14	15	16	Measured terminal	Test limits		Unit
			Test no.	A	B	C	D	E	F	G	GND	Y	H	I	J	K	L	OC	V_{CC}		Min	Max	
10	t_{PHL}	3003	101	IN	2.7 V	2.7 V	2.7 V	2.7 V	2.7 V	2.7 V	GND	OUT	2.7 V	2.7 V	2.7 V	2.7 V	2.7 V	GND	5.0 V	A to Y	2.0	10.5	ns
T_C = 125°C		Fig. 4	102	2.7 V	IN	2.7 V	“	“	“	“	“	“	“	“	“	“	“	“	“	B to Y	“	“	“
		“	103	“	2.7 V	IN	“	“	“	“	“	“	“	“	“	“	“	“	“	C to Y	“	“	“
		“	104	“	“	2.7 V	IN	“	“	“	“	“	“	“	“	“	“	“	“	D to Y	“	“	“
		“	105	“	“	“	2.7 V	IN	“	“	“	“	“	“	“	“	“	“	“	E to Y	“	“	“
		“	106	“	“	“	“	2.7 V	IN	“	“	“	“	“	“	“	“	“	“	F to Y	“	“	“
		“	107	“	“	“	“	“	2.7 V	IN	“	“	“	“	“	“	“	“	“	G to Y	“	“	“
		“	108	“	“	“	“	“	“	2.7 V	“	“	IN	“	“	“	“	“	“	H to Y	“	“	“
		“	109	“	“	“	“	“	“	“	“	“	2.7 V	IN	“	“	“	“	“	I to Y	“	“	“
		“	110	“	“	“	“	“	“	“	“	“	“	2.7 V	IN	“	“	“	“	J to Y	“	“	“
		“	111	“	“	“	“	“	“	“	“	“	“	“	2.7 V	IN	“	“	“	K to Y	“	“	“
		“	112	“	“	“	“	“	“	“	“	“	“	“	“	2.7 V	IN	“	“	L to Y	“	“	“
	t_{PLH}	“	113	IN	“	“	“	“	“	“	“	“	“	“	“	“	2.7 V	“	“	A to Y	“	9.0	“
		“	114	2.7 V	IN	“	“	“	“	“	“	“	“	“	“	“	“	“	“	B to Y	“	“	“
		“	115	“	2.7 V	IN	“	“	“	“	“	“	“	“	“	“	“	“	“	C to Y	“	“	“
		“	116	“	“	2.7 V	IN	“	“	“	“	“	“	“	“	“	“	“	“	D to Y	“	“	“
		“	117	“	“	“	2.7 V	IN	“	“	“	“	“	“	“	“	“	“	“	E to Y	“	“	“
		“	118	“	“	“	“	2.7 V	IN	“	“	“	“	“	“	“	“	“	“	F to Y	“	“	“
		“	119	“	“	“	“	“	2.7 V	IN	“	“	“	“	“	“	“	“	“	G to Y	“	“	“
		“	120	“	“	“	“	“	“	2.7 V	“	“	IN	“	“	“	“	“	“	H to Y	“	“	“
		“	121	“	“	“	“	“	“	“	“	“	2.7 V	IN	“	“	“	“	“	I to Y	“	“	“
		“	122	“	“	“	“	“	“	“	“	“	“	2.7 V	IN	“	“	“	“	J to Y	“	“	“
		“	123	“	“	“	“	“	“	“	“	“	“	“	2.7 V	IN	“	“	“	K to Y	“	“	“
		“	124	“	“	“	“	“	“	“	“	“	“	“	2.7 V	2.7 V	IN	“	“	L to Y	“	“	“
	t_{ZH}	“	125	GND	GND	GND	GND	GND	GND	GND	“	“	GND	GND	GND	GND	GND	IN	“	OC to Y	“	25.0	“
	t_{HZ}	“	126	GND	GND	GND	GND	GND	GND	GND	“	“	GND	GND	GND	GND	GND	“	“	OC to Y	“	11.0	“
	t_{ZL}	“	127	5.0 V	5.0 V	5.0 V	5.0 V	5.0 V	5.0 V	5.0 V	“	“	5.0 V	5.0 V	5.0 V	5.0 V	5.0 V	“	“	OC to Y	“	26.0	“
	t_{LZ}	“	128	5.0 V	5.0 V	5.0 V	5.0 V	5.0 V	5.0 V	5.0 V	“	“	5.0 V	5.0 V	5.0 V	5.0 V	5.0 V	“	“	OC to Y	“	17.0	“
11	Same tests, terminal conditions, and limits as for subgroup 10, except T_C = -55°C.																						

1 _/ For circuit C, I_{OS} maximum test limits = -110 mA.

5. PACKAGING

5.1 Packaging requirements. For acquisition purposes, the packaging requirements shall be as specified in the contract or order (see 6.2). When packaging of materiel is to be performed by DoD or in-house contractor personnel, these personnel need to contact the responsible packaging activity to ascertain packaging requirements. Packaging requirements are maintained by the Inventory Control Point's packaging activity within the Military Service or Defense Agency, or within the military service's system command. Packaging data retrieval is available from the managing Military Department's or Defense Agency's automated packaging files, CD-ROM products, or by contacting the responsible packaging activity.

6. NOTES

(This section contains information of a general or explanatory nature that may be helpful, but it is not mandatory)

6.1 Intended use. Microcircuits conforming to this specification are intended for and logistic support of existing equipment.

6.2 Acquisition requirements. Acquisition documents should specify the following:

a. Title, number, and date of the specification.
b. PIN and compliance identifier, if applicable (see 1.2).
c. Requirements for delivery of one copy of the conformance inspection data pertinent to the device inspection lot to be supplied with each shipment by the device manufacturer, if applicable.
d. Requirement for certificate of compliance, if applicable.
e. Requirements for notification of change of product or process to acquiring activity in addition to notification to the qualifying activity, if applicable.
f. Requirements for failure analysis (including required test condition of method 5003), corrective action and reporting of results, if applicable.
g. Requirements for product assurance options.
h. Requirements for carriers, special lead lengths or lead forming, if applicable. These requirements shall not affect the part number. Unless otherwise specified, these requirements will not apply to direct purchase by or direct shipment to the Government.
i. Requirements for "JAN" marking.
j. Packaging requirements (see 5.1).

6.3 Qualification. With respect to products requiring qualification, awards will be made only for products which are, at the time of award of contract, qualified for inclusion in Qualified Manufacturers List QML-38535 whether or not such products have actually been so listed by that date. The attention of the contractors is called to these requirements, and manufacturers are urged to arrange to have the products that they propose to offer to the Federal Government tested for qualification in order that they may be eligible to be awarded contracts or purchase orders for the products covered by this specification. Information pertaining to qualification of products may be obtained from DSCC-VQ, 3990 E. Broad Street, Columbus, Ohio 43123-1199.

6.4 Superseding information. The requirements of MIL-M-38510 have been superseded to take advantage of the available Qualified Manufacturer Listing (QML) system provided by MIL-PRF-38535. Previous references to MIL-M-38510 in this document have been replaced by appropriate references to MIL-PRF-38535. All technical requirements now consist of this specification and MIL-PRF-38535. The MIL-M-38510 specification sheet number and PIN have been retained to avoid adversely impacting existing government logistics systems and contractor's parts lists.

6.5 Abbreviations, symbols and definitions. The abbreviations, symbols, and definitions used herein are defined in MIL-PRF-38535 and MIL-HDBK-1331, and as follows:

GND .....Electrical ground (common terminal)
I_{IN} .....Current flowing into an input terminal
t_{HZ} .....Output disable time (of a three-state output) from high level. The time between the specified reference points on the input and output voltage waveforms with the three-state output changing from the defined high level to a high impedance (off) state.
t_{LZ} .....Output disable time (of a three-state output) from low level. The time between the specified reference points on the input and output voltage waveforms with the three-state output changing from the defined low level to a high impedance (off) state.
t_{ZH} .....Output enable time (of a three-state output) to high level. The time between the specified reference points on the input and output voltage waveforms with the three-state output changing forma high impedance (off) state to the defined high level.
t_{ZL} .....Output enable time (of a three-state output) to low level. The time between the specified reference points on the input and output voltage waveforms with the three-state output changing forma high impedance (off) state to the defined low level.
V_{IN} .....Voltage level at an input terminal

6.6 Logistic support. Lead materials and finishes (see 3.3) are interchangeable. Unless otherwise specified, microcircuits acquired for Government logistic support will be acquired to device class B (see 1.2.2), lead material and finish A (see 3.4). Longer lead lengths and lead forming should not affect the part number.

6.7 Substitutability. The cross-reference information below is presented for the convenience of users. Microcircuits covered by this specification will functionally replace the listed generic-industry type. Generic-industry microcircuit types may not have equivalent operational performance characteristics across military temperature ranges or reliability factors equivalent to MIL-M-35810 device types and may have slight physical variations in relation to case size. The presence of this information should not be deemed as permitting substitution of generic-industry types for MIL-M-38510 types or as a waiver of any of the provisions of MIL-PRF-38535.

Device type	Commercial type
01	54S00
02	54S03
03	54S04
04	54S05
05	54S10
06	54S20
07	54S22
08	54S30
09	54S133
10	54S134

6.8 Manufacturers' designation. Manufacturers' circuits included in this specification are designated as shown in table IV herein.

TABLE IV. Manufacturers' designator. 1/

Device Type	Manufacturer			
	Circuit A	Circuit B	Circuit C	Circuit D
	Texas Instruments	Fairchild Semi	Signetics	National Semiconductor
01	X	X	X	X
02	X	X	X	
03	X	X	X	X
04	X	X	X	
05	X	X	X	X
06	X	X	X	X
07	X	X	X	
08	X	X	X	
09	X	X	X	X
10	X	X	X	

1/ An "X" indicates the manufacturer has submitted a schematic for the indicated device type.

6.9 Changes from previous issue. Marginal notations are not used in this revision to identify changes with respect to the previous issue due to the extensiveness of the changes.

Custodians:
Army - CR
Navy - EC
Air Force - 11
DLA - CC

Preparing activity:
DLA - CC

(Project 5962-2005-042)

Review activities:
Army - MI, SM
Navy - AS, CG, MC, SH, TD
Air Force - 03, 19, 99

NOTE: The activities listed above were interested in this document as of the date of this document. Since organizations and responsibilities can change, you should verify the currency of the information above using the ASSIST Online database at http://assist.daps.dla.mil.