INCH-POUND

MIL-M-38510/56G
18 April 2005

SUPERSEDING
MIL-M-38510/56F
19 February 1988

MILITARY SPECIFICATION
MICROCIRCUITS, DIGITAL, CMOS, COUNTERS/DIVIDERS, MONOLITHIC SILICON

Reactivated after 18 Apr. 2005 and may be used for new and existing designs and acquisitions.

This specification is approved for use by all Departments and Agencies of the Department of Defense.

The requirements for acquiring the product herein consists of this specification sheet and MIL-PRF 38535

1. SCOPE

1.1 Scope. This specification covers the detail requirements for monolithic silicon, CMOS, logic microcircuits. Two product assurance classes and a choice of case outlines, lead finishes, and radiation hardness assurance (RHA) are provided and are reflected in the complete Part or Identifying Number (PIN). For this product, the requirements of MIL-M-38510 have been superseded by MIL-PRF-38535 (see 6.3).

1.2 Part or identifying number (PIN). The PIN is in accordance with MIL-PRF-38535 and as specified herein.

1.2.1 Device types. The device types are as follows:

Device type	Circuit
01	Decade counter/divider
02	Presettable divide-by-“N” counter
03	14-stage ripple-carry binary counter/divider
04	Divide-by-8 counter/divider
05	7-stage binary counter
51	Decade counter/divider
52	Presettable divide-by-“N” counter
53	14-stage ripple-carry binary counter/divider
54	Divide-by-8 counter/divider
55	7-stage binary counter

1.2.2 Device class. The device class is the product assurance level as defined in MIL-PRF-38535.

Comments, suggestions, or questions on this document should be addressed to: Commander, Defense Supply Center Columbus, ATTN: DSCC-VAS, P.O. Box 3990, Columbus, OH 43218-3990, or email to CMOS@dscc.dla.mil. Since contact information can change, you may want to verify the currency of this address information using the ASSIST Online database at http://assist.daps.dla.mil.

AMSC N/A FSC 5962

1.2.3 Case outlines. The case outlines are as designated in MIL-STD-1835 and as follows:

Outline letter	Descriptive designator	Terminals	Package style
A	GDFP5-F14 or CDFP6-F14	14	Flat pack
B	GDFP4-F14	14	Flat pack
C	GDIP1-T14 or CDIP2-T14	14	Dual-in-line
D	GDFP1-F14 or CDFP2-F14	14	Flat pack
E	GDIP1-T16 or CDIP2-T16	16	Dual-in-line
F	GDFP2-F16 or CDFP3-F16	16	Flat pack
N	CDFP4-F16	16	Flat pack
T	CDFP3-F14	14	Flat pack
X 1/ 2/	GDFP5-F14 or CDFP6-F14	14	Flat pack, except A dimension equals 0.100” (2.54 mm) max
Y 1/ 2/	GDFP1-F14 or CDFP2-F14	14	Flat pack, except A dimension equals 0.100” (2.54 mm) max
Z 1/ 2/	GDFP2-F16 or CDFP3-F16	16	Flat pack, except A dimension equals 0.100” (2.54 mm) max

1.3 Absolute maximum ratings.

Supply voltage range (V_{DD} - V_{SS}):
Device types 01, 02, 03, 04, and 05 ..... -0.5 V dc to +15.5 V dc
Device types 51, 52, 53, 54, and 55 ..... -0.5 V dc to +18.0 V dc
Input current (each input) ..... ±10 mA
Input voltage range..... (V_{SS} - 0.5 V) ≤ V_I ≤ (V_{DD} + 0.5 V)
Storage temperature range (T_{STG})..... -65° to +175°C
Maximum power dissipation (P_D) ..... 200 mW
Lead temperature (soldering, 10 seconds) ..... +300°C
Thermal resistance, junction to case (θ_{JC})..... See MIL-STD-1835
Junction temperature (T_J) ..... 175°C

1.4 Recommended operating conditions.

Supply voltage range (V_{DD} - V_{SS}):
Device types 01, 02, 03, 04, and 05 ..... 4.5 V dc to 12.5 V dc
Device types 51, 52, 53, 54, and 55 ..... 4.5 V dc to 15.0 V dc
Input low voltage range (V_{IL}):
Device types 01, 02, 03, 04, and 05 ..... 0.0 V to 0.85 V dc @ V_{DD} = 5.0 V dc
0.0 V to 2.0 V dc @ V_{DD} = 10.0 V dc
0.0 V to 2.1 V dc @ V_{DD} = 12.5 V dc
Device types 51, 52, 53, 54, and 55 ..... V_{OL} = 10% V_{DD}, V_{OH} = 90% V_{DD}
0.0 V to 1.5 V dc @ V_{DD} = 5.0 V dc
0.0 V to 2.0 V dc @ V_{DD} = 10.0 V dc
0.0 V to 4.0 V dc @ V_{DD} = 15.0 V dc
Input high voltage range (V_{IH}):
Device types 01, 02, 03, 04, and 05 ..... 3.95 V to 5.0 V dc @ V_{DD} = 5.0 V dc
8.0 V to 10.0 V dc @ V_{DD} = 10.0 V dc
10 V to 12.5 V dc @ V_{DD} = 12.5 V dc
Device types 51, 52, 53, 54, and 55 ..... V_{OL} = 10% V_{DD}, V_{OH} = 90% V_{DD}
3.5 V to 5.0 V dc @ V_{DD} = 5.0 V dc
8.0 V to 10.0 V dc @ V_{DD} = 10.0 V dc
11.0 V to 15.0 V dc @ V_{DD} = 15.0 V dc
Load capacitance ..... 50 pF maximum
Ambient operating temperature range (T_A) ..... -55°C to +125°C

1/ As an exception to nickel plate or undercoating paragraph of MIL-PRF-38535, appendix A, for case outlines X, Y, and Z only, the leads of bottom brazed ceramic packages (i.e., configuration 2 of case outline A, D, or F) may have electroless nickel undercoating which is 50 to 200 microinches (1.27 to 5.08 μm) thick provided the lead finish is hot solder dip (i.e., finish letter A) and provided that, after any lead forming, an additional hot solder dip coating is applied which extends from the outer tip of the lead to no more than 0.015 inch (0.38 mm) from the package edge.

2/ For bottom or side brazed packages, case outlines X, Y, and Z only, the S_1 dimension may go to .000 inch (.00 mm) minimum.

2. APPLICABLE DOCUMENTS

2.1 General. The documents listed in this section are specified in sections 3, 4, or 5 of this specification. This section does not include documents cited in other sections of this specification or recommended for additional information or as examples. While every effort has been made to ensure the completeness of this list, document users are cautioned that they must meet all specified requirements of documents cited in sections 3, 4, or 5 of this specification, whether or not they are listed.

2.2 Government documents.

2.2.1 Specifications and Standards. The following specifications and standards form a part of this specification to the extent specified herein. Unless otherwise specified, the issues of these documents are those cited in the solicitation or contract.

DEPARTMENT OF DEFENSE SPECIFICATION

MIL-PRF-38535 - Integrated Circuits (Microcircuits) Manufacturing, General Specification for.

DEPARTMENT OF DEFENSE STANDARDS

MIL-STD-883 - Test Method Standard Microcircuits.
MIL-STD-1835 - Interface Standard Electronic Component Case Outlines.

(Copies of these documents are available online at http://assist.daps.dla.mil/quicksearch/ or http://assist.daps.dla.mil or from the Standardization Document Order Desk, 700 Robbins Avenue, Building 4D, Philadelphia, PA 19111-5094.)

2.3 Order of precedence. In the event of a conflict between the text of this document and the references cited herein, the text of this document takes precedence. Nothing in this document, however, supersedes applicable laws and regulations unless a specific exemption has been obtained.

3. REQUIREMENTS

3.1 Qualification. Microcircuits furnished under this specification shall be products that are manufactured by a manufacturer authorized by the qualifying activity for listing on the applicable qualified manufacturers list before contract award (see 4.3 and 6.4).

3.2 Item requirements. The individual item requirements shall be in accordance with MIL-PRF-38535 and as specified herein or as modified in the device manufacturer's Quality Management (QM) plan. The modification in the QM plan shall not affect the form, fit, or function as described herein.

3.3 Design, construction, and physical dimensions. The design, construction, and physical dimensions shall be as specified in MIL-PRF-38535 and herein. Although eutectic die bonding is preferred, epoxy die bonding may be performed. However, the resin used shall be Dupont 5504 Conductive Silver Paste, or equivalent, which is cured at 200°C ±10°C for a minimum of 2 hours. The use of equivalent epoxies or cure cycles shall be approved by the qualifying activity. Equivalency shall be demonstrated in data submitted to the qualifying activity for verification.

3.3.1 Terminal connections. The terminal connections shall be as specified on figure 1.

3.3.2 Logic diagrams and functional waveforms. The logic diagrams and functional waveforms shall be as specified on figure 2.

3.3.3 Truth tables. The truth tables shall be as specified on figure 3.

3.3.4 Test procedures and test circuits. The test procedures and test circuits shall be as specified on figures 4 through 7.

3.3.5 Switching time waveforms and test circuit. The switching time waveforms and test circuit shall be as specified on figure 8.

3.3.6 Schematic circuits. The schematic circuits shall be maintained by the manufacturer and made available to the qualifying activity or preparing activity upon request.

3.3.7 Case outlines. The case outlines shall be as specified in 1.2.3.

3.4 Lead material and finish. The lead material and finish shall be in accordance with MIL-PRF-38535 (see 6.6).

3.5 Electrical performance characteristics. Unless otherwise specified, the electrical performance characteristics are as specified in table I, and apply over the full recommended case operating temperature range,.

3.6 Electrical test requirements. The electrical test requirements for each device class shall be the subgroups specified in table II. The electrical tests for each subgroup are described in table III.

3.7 Marking. Marking shall be in accordance with MIL-PRF-38535.

3.7.1 Radiation hardness assurance identifier. The radiation hardness assurance identifier shall be in accordance with MIL-PRF-38535 and 4.5.4 herein.

3.8 Microcircuit group assignment. The devices covered by this specification shall be in microcircuit group number 40 (see MIL-PRF-38535, appendix A).

TABLE I. Electrical performance characteristics.

Test	Symbol	Conditions 1/ V_{SS} = 0 V, -55°C ≤ T_C ≤ 125°C unless otherwise specified	Device type	Limits Min	Limits Max	Unit
Positive clamping input to V_{DD}	V_{IC} (POS)	T_C = 25°C, V_{DD} = GND, V_{SS} = Open, Output = Open, I_I = 1 mA	All		1.5	V
Negative clamping input to V_{SS}	V_{IC} (NEG)	T_C = 25°C, V_{DD} = Open, V_{SS} = GND, Output = Open, I_I = -1 mA	All		-6	V
Quiescent supply current	I_{SS}	V_{DD} maximum, any combination of inputs	01,02,04, 05,51,52, 54,55		-5.0	μA
			03,53		-10.0	μA
High level output voltage	V_{OH}	V_{DD} = 12.5 V, no load, All outputs	01-05	11.25		V
		V_{DD} = 5.0 V, I_{OH} = -21 μA, DECODED outputs	01,04	4.5		V
		V_{DD} = 5.0 V, I_{OH} = -105 μA CARRY output	01,04	4.5		V
		V_{DD} = 5.0 V, I_{OH} = -40 μA, Q_1 through Q_4 outputs	02	4.5		V
		V_{DD} = 5.0 V, I_{OH} = -105 μA, Q_5 output	02	4.5		V
		V_{DD} = 5.0 V, I_{OH} = -65 μA, All outputs	03	4.5		V
		V_{DD} = 5.0 V, I_{OH} = -105 μA, All outputs	05	4.5		V
		V_{DD} = 15 V, I_{OH} = 0	51-55	14.95		V
Low level output voltage	V_{OL}	V_{DD} = 12.5 V, No load, All outputs	01-05		1.25	V
		V_{DD} = 5.0 V, I_{OL} = 35 μA, DECODED outputs	01,04		500	mV
		V_{DD} = 5.0 V, I_{OL} = 105 μA CARRY output	01,04		500	mV
		V_{DD} = 5.0 V, I_{OL} = 35 μA Q_1 through Q_4 output	02		500	mV
		V_{DD} = 5.0 V, I_{OL} = 105 μA Q_5 output	02		500	mV
		V_{DD} = 5.0 V, I_{OL} = 90 μA All outputs	03		500	mV
		V_{DD} = 5.0 V, I_{OL} = 175 μA All outputs	05		500	mV
		V_{DD} = 15 V, I_{OL} = 0	51-55		50	mV
Input high voltage	V_{IH}	V_{DD} = 5 V, see table III	01-05	3.6		V
		V_{DD} = 5 V, see table III	51-55	3.5		V

See footnotes at end of table.

TABLE I. Electrical performance characteristics – Continued.

Test	Symbol	Conditions 1/ V_{SS} = 0 V, -55°C ≤ T_C ≤ 125°C unless otherwise specified		Device type	Limits Min	Limits Max	Unit
Input high voltage	V_{IH}	V_{DD} = 10 V, see table III		51-55	7.0		V
		V_{DD} = 15 V, see table III		51-55	11.0		V
Input low voltage	V_{IL}	V_{DD} = 5 V, see table III		01-05		0.85	V
		V_{DD} = 5 V, see table III		51-55		1.5	V
		V_{DD} = 10 V, see table III		51-55		3.0	V
		V_{DD} = 15 V, see table III		51-55		4.0	V
Output low (sink) current	I_{OL}	V_{DD} = 5 V, V_{IN} = 0 V or 5 V, V_{OL} = 0.4 V		51-55	0.36		mA
		V_{DD} = 15 V, V_{IN} = 0 V or 15 V, V_{OL} = 1.5 V		51-55	2.4		mA
Output high (source) current	I_{OH}	V_{DD} = 5 V, V_{IN} = 0 V or 5 V, V_{OH} = 4.6 V		51-55	-0.36		mA
		V_{DD} = 15 V, V_{IN} = 0 V or 15 V, V_{OH} = 13.5 V		51-55	-2.4		mA
Input leakage current, high	I_{IH} 2/	Each input	V_{DD} = 15 V	01-05		100	nA
			V_{DD} = 18 V	51-55			
Input leakage current, low	I_{IL} 2/		V_{DD} = 15 V	01-05		-100	nA
			V_{DD} = 18 V	51-55			
Input capacitance	C_i	V_{DD} = 0 V, f = 1 MHz T_C = 25°C, any input		All		12	pF
Propagation delay time, high-to-low level	t_{PHL}	V_{DD} = 5.0 V, CLOCK to DECODED outputs		01	.013	2.70	µs
				51	"	1.40	
		V_{DD} = 5.0 V, RESET to DECODED outputs 1-9		01	"	2.70	
				51	"	1.40	
		V_{DD} = 5.0 V, CLOCK to CARRY output		01	"	2.18	
				51	"	1.12	
		V_{DD} = 5.0 V, CLOCK to Q_5 output		02	"	2.18	
				52	"	980	ns
		V_{DD} = 5.0 V, CLOCK to Q_1 – Q_4 outputs		02	"	2.70	ns
				52	"	980	ns
Propagation delay time, high-to-low level, low-to-high level	t_{PHL}, t_{PLH}	V_{DD} = 5.0 V, CLOCK to	Q_1	03	"	1.34	µs
			Q_4		.052	5.25	
			Q_5		.065	6.68	
			Q_6		.078	8.03	
			Q_7		.091	9.30	
			Q_8		.104	10.65	
			Q_9		.117	12.15	
			Q_{10}		.130	13.35	
			Q_{11}		.143	14.85	
			Q_{12}		.156	16.05	
			Q_{13}		.169	17.40	
			Q_{14}		.182	18.75	

See footnotes at end of table.

TABLE I. Electrical performance characteristics – Continued.

Test	Symbol	Conditions 1/ V_{SS} = 0 V, -55°C ≤ T_C ≤ 125°C, unless otherwise specified		Device type	Limits Min	Limits Max	Unit
Propagation delay time, high-to-low level	t_{PHL}	V_{DD} = 5.0 V, RESET to any output		03	.013	4.95	µs
				53	.013	630	ns
		V_{DD} = 5.0 V, CLOCK to CARRY output		04	.013	1.80	µs
				54	.013	1.16	
		V_{DD} = 5.0 V, CLOCK to DECODED outputs		04	.013	3.38	
				54	.013	1.40	
		V_{DD} = 5.0 V, RESET to DECODED outputs 1-7		04	.013	1.80	
				54	.013	1.40	
Propagation delay time, low-to-high level, high-to-low level	t_{PLH}, t_{PHL}	V_{DD} = 5.0 V, CLOCK to	Q_1	05	.013	0.66	
			Q_2		.026	1.32	
			Q_3		.039	1.98	
			Q_4		.052	2.64	
			Q_5		.065	3.30	
			Q_6		.078	3.96	
			Q_7		.091	4.65	
		V_{DD} = 5.0 V, RESET to any output		05	.013	2.25	µs
				55	13	490	ns
Propagation delay time, low-to-high level	t_{PLH}	V_{DD} = 5.0 V, CLOCK to DECODED outputs		01	.013	2.70	µs
				51	"	1.40	
		V_{DD} = 5.0 V, CLOCK to CARRY output		01	"	2.18	
				51	"	1.12	
		V_{DD} = 5.0 V, RESET to 0 output		01	"	2.70	
				51	"	1.40	
		V_{DD} = 5.0 V, RESET to CARRY output		01	"	2.18	
				51	"	1.12	
		V_{DD} = 5.0 V, CLOCK to Q_5 output		02	"	2.18	
		V_{DD} = 5.0 V, CLOCK to Q_1 – Q_4 outputs		02	"	2.70	
		V_{DD} = 5.0 V, CLOCK to Q_1 – Q_5 outputs		52	13	980	ns
		V_{DD} = 5.0 V, RESET to Q_5 output		02	.013	2.70	µs
		V_{DD} = 5.0 V, RESET to Q_1 – Q_4 outputs		02	.013	2.18	
		V_{DD} = 5.0 V, RESET to Q_1 – Q_5 outputs		52	13	980	ns
Propagation delay time, high-to-low level, low-to-high level	t_{PHL}, t_{PLH}	V_{DD} = 5.0 V, CLOCK to	Q_1	53	.013	0.77	µs
			Q_4		.052	2.15	
			Q_5		.065	2.62	
			Q_6		.078	3.08	
			Q_7		.091	3.54	
			Q_8		.104	4.00	
			Q_9		.117	4.47	
			Q_{10}		.130	4.93	
			Q_{11}		.143	5.39	
			Q_{12}		.156	5.85	
			Q_{13}		.169	6.31	
			Q_{14}		.182	6.78	
Propagation delay time, low-to-high level	t_{PLH}	V_{DD} = 5.0 V, CLOCK to CARRY output		04	.013	1.80	µs
				54	"	1.16	
		V_{DD} = 5.0 V, CLOCK to DECODED outputs		04	"	3.38	
				54	"	1.40	
		V_{DD} = 5.0 V, RESET to 0 output		04	"	3.38	
				54	"	1.40	
		V_{DD} = 5.0 V, RESET to CARRY output		04	"	1.80	
				54	"	1.12	

See footnotes at end of table.

TABLE I. Electrical performance characteristics – Continued.

Test	Symbol	Conditions 1/ V_{SS} = 0 V, -55°C ≤ T_C ≤ 125°C unless otherwise specified		Device type	Limits Min	Limits Max	Unit
Propagation delay time, low-to-high level, high-to-low level	t_{PLH}, t_{PHL}	V_{DD} = 5.0 V, CLOCK to	Q_1	55	.013	0.49	µs
			Q_2		.026	0.77	
			Q_3		.039	1.05	
			Q_4		.052	1.33	
			Q_5		.055	1.61	
			Q_6		.078	1.89	
			Q_7		.097	2.17	
Transition time, high-to-low level = transition time, low-to-high level	t_{THL}, t_{TLH}	V_{DD} = 5.0 V	CARRY output	01	10	825	ns
			DECODED outputs		.010	3.38	µs
	t_{THL}	V_{DD} = 5.0 V, CARRY and DECODED outputs		51,54	10	280	ns
	t_{TLH}	V_{DD} = 5.0 V, CARRY and DECODED outputs		51,54	10	504	ns
	t_{THL}, t_{TLH}	V_{DD} = 5.0 V	Q_5 output	02	10	825	ns
			Q_1 – Q_4 outputs	02	.010	3.38	µs
			Q_1 – Q_5 outputs	52	10	350	ns
		V_{DD} = 5.0 V, all outputs		03	.010	1.73	µs
				53	10	280	ns
	t_{THL}	V_{DD} = 5.0 V, CARRY output and DECODED outputs		04	"	750	ns
	t_{TLH}	V_{DD} = 5.0 V, CARRY output and DECODED outputs		04	"	900	ns
	t_{THL}	V_{DD} = 5.0 V, all outputs		05	"	645	ns
				55	"	280	ns
	t_{TLH}	V_{DD} = 5.0 V, all outputs		05	"	1050	ns
				55	"	280	ns
Minimum setup time, high-to-low level	t_{SHL}	V_{DD} = 5.0 V, CLOCK input to RESET or CLOCK enable (DECODED outputs)		01		1125	ns
		V_{DD} = 5.0 V, CLOCK input to CLOCK ENABLE (CARRY, DECODED outputs)		51		336	ns
		V_{DD} = 5.0 V, CLOCK input to RESET or CLOCK ENABLE (CARRY output)		01		750	ns
		V_{DD} = 5.0 V, CLOCK input to RESET		51		560	ns
		V_{DD} = 5.0 V, CLOCK input to RESET or PRESET ENABLE		02		1125	ns
				52		560	ns
		V_{DD} = 5.0 V, CLOCK input to data line		02		750	ns
				52		280	ns
Minimum set-up time, low-to-high level	t_{SLH}	V_{DD} = 5.0 V, CLOCK input to data line		02		750	ns
				52		280	ns
Minimum set-up time, high-to-low level	t_{SHL}	V_{DD} = 5.0 V, CLOCK input to CLOCK ENABLE or RESET		04		1125	ns
		V_{DD} = 5.0 V, CLOCK input to CLOCK ENABLE		54		350	ns
		V_{DD} = 5.0 V, CLOCK input to RESET		54		560	ns
Minimum clock pulse width	t_{PH}	V_{DD} = 5.0 V, V_{IH} = 5.0 V		01,02,04		750	ns
				51		350	
				52		700	
				54		550	

See footnotes at end of table.

TABLE I. Electrical performance characteristics – Continued.

Test	Symbol	Conditions 1/ V_{SS} = 0 V, -55°C ≤ T_C ≤ 125°C unless otherwise specified	Device type	Limits Min	Limits Max	Unit
Minimum data pulse width	t_{PH}	V_{DD} = 5.0 V V_{IH} = 5.0 V	03		750	ns
			53		470	
			05		450	
			55		280	
Minimum preset pulse width	t_{PH}	V_{DD} = 5.0 V V_{IH} = 5.0 V	02		750	ns
			52		560	
Minimum reset pulse width	t_{PH}	V_{DD} = 5.0 V V_{IH} = 5.0 V	01,02		750	ns
			51,52		560	
			04,54		560	
			05		975	
			03		2.7	µs
			53		630	ns
			55		490	
Maximum clock frequency	f_{MAX}	V_{DD} = 5.0 V C_L = 50 pF	03	650		kHz
			01,02,04	350		kHz
			51	1.43		MHz
			05,53,55	1.10		MHz
			52,54	0.71		MHz

1/ Complete terminal conditions shall be as specified in table III.
2/ Input current at one input node.

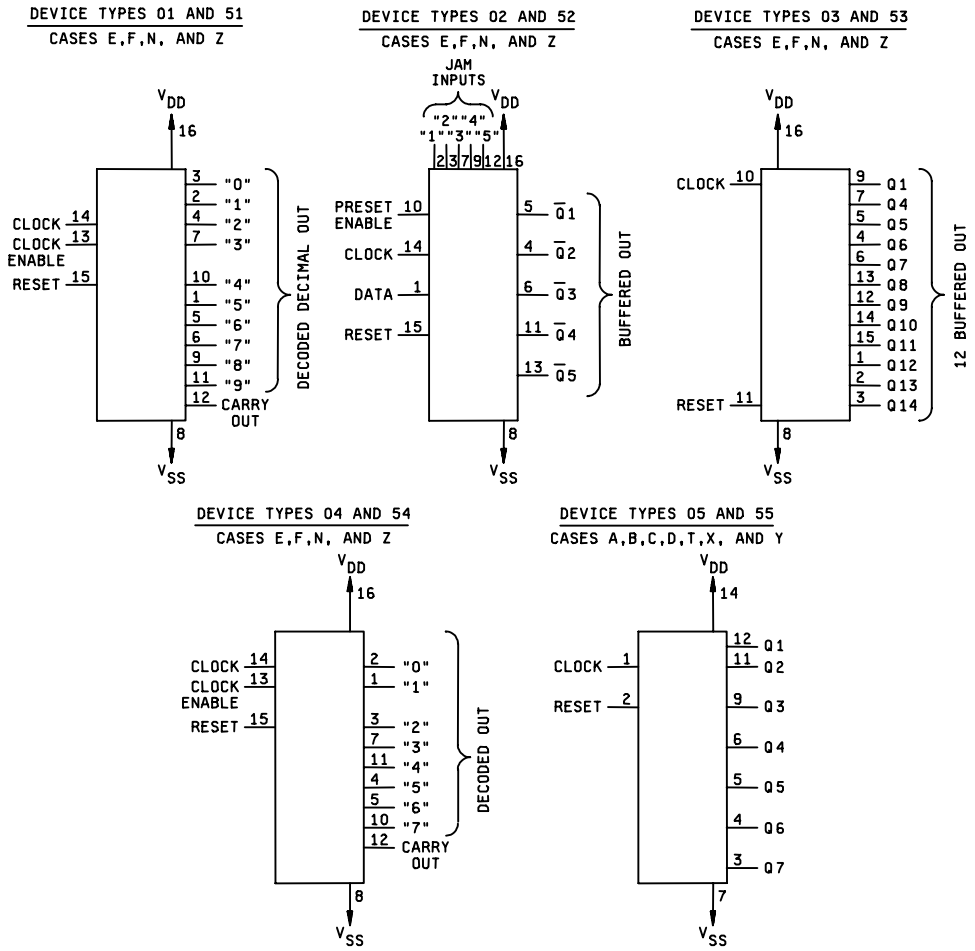

FIGURE 1. Terminal connections.

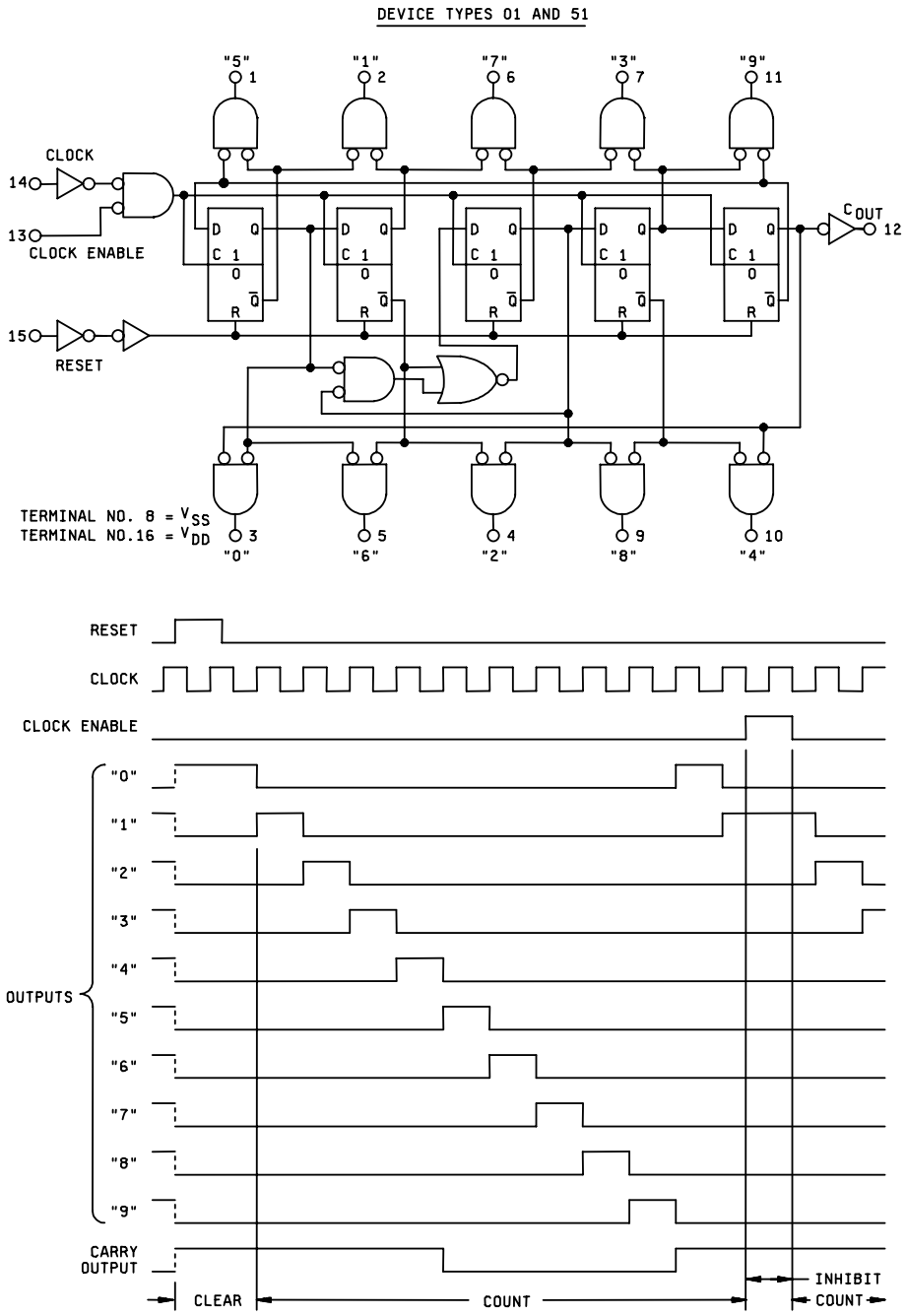

FIGURE 2. Logic diagrams and functional waveforms.

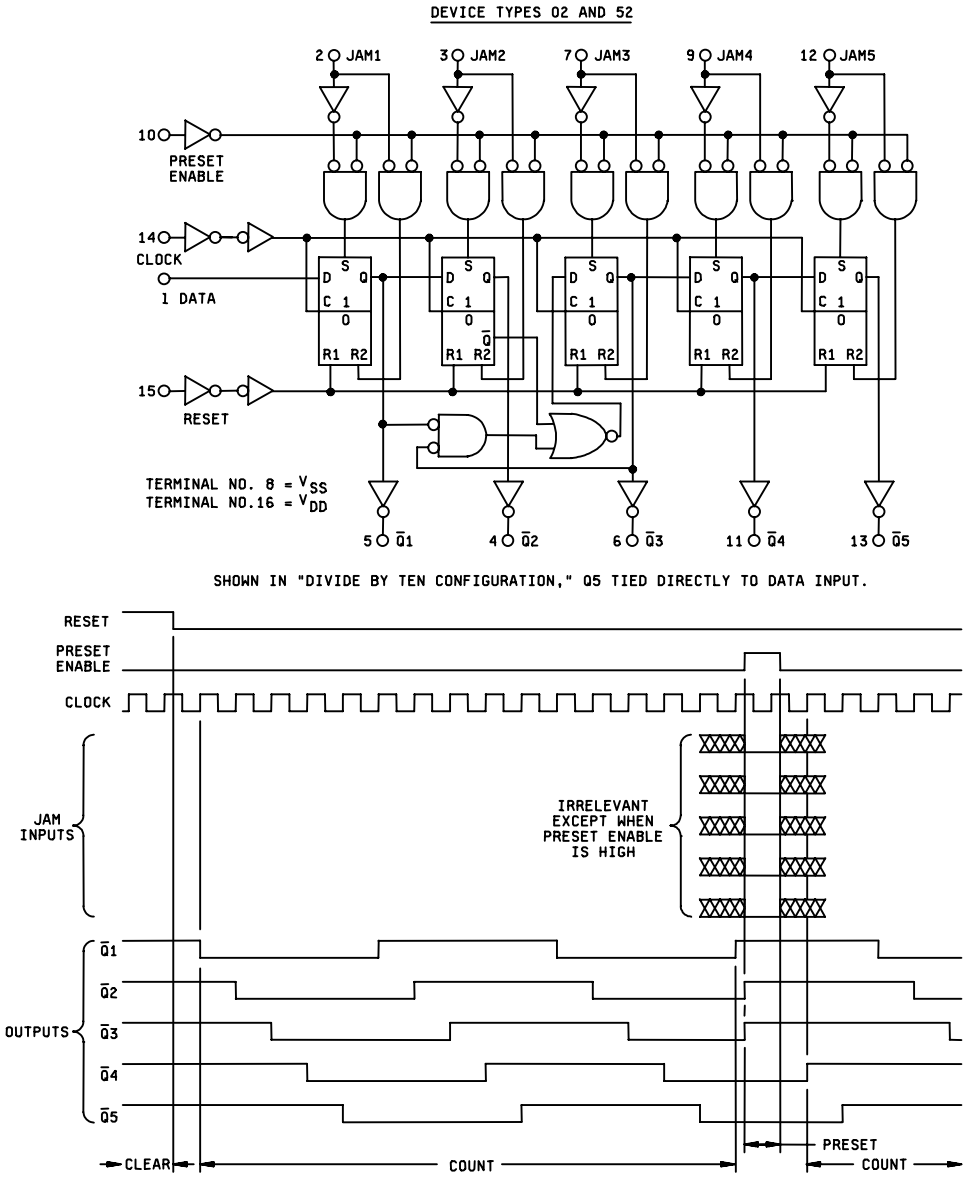

FIGURE 2. Logic diagrams and functional waveforms - Continued.

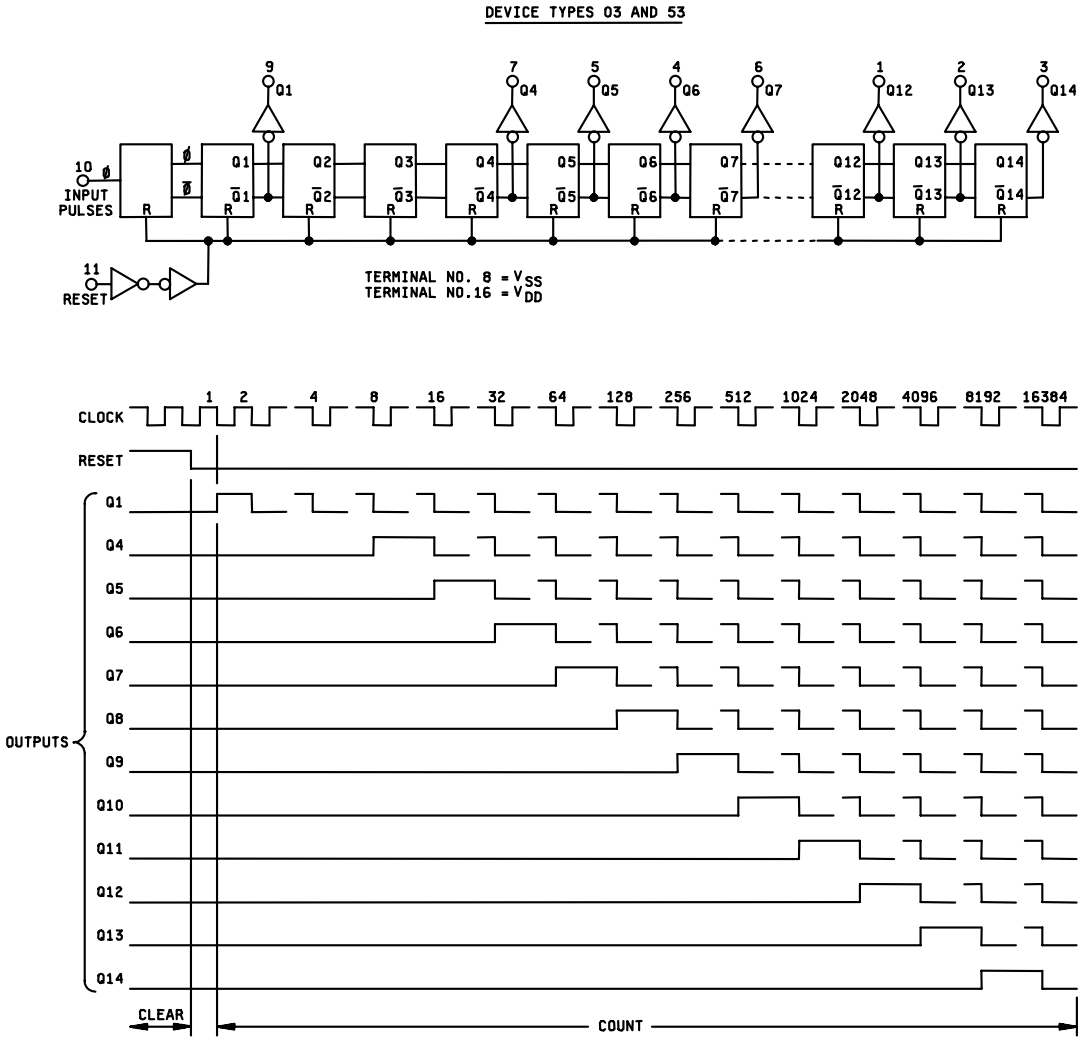

FIGURE 2. Logic diagrams and functional waveforms - Continued.

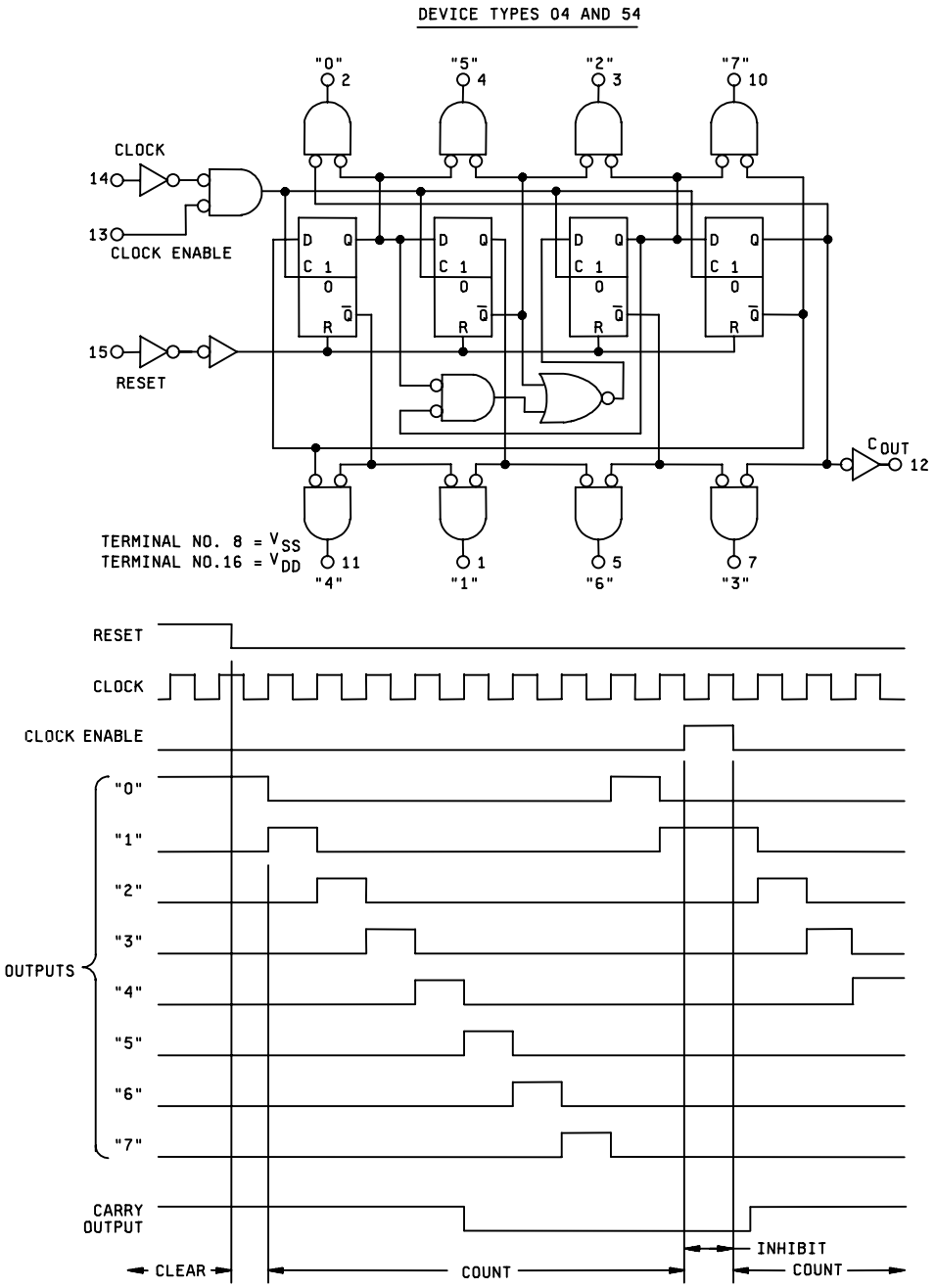

FIGURE 2. Logic diagrams and functional waveforms - Continued.

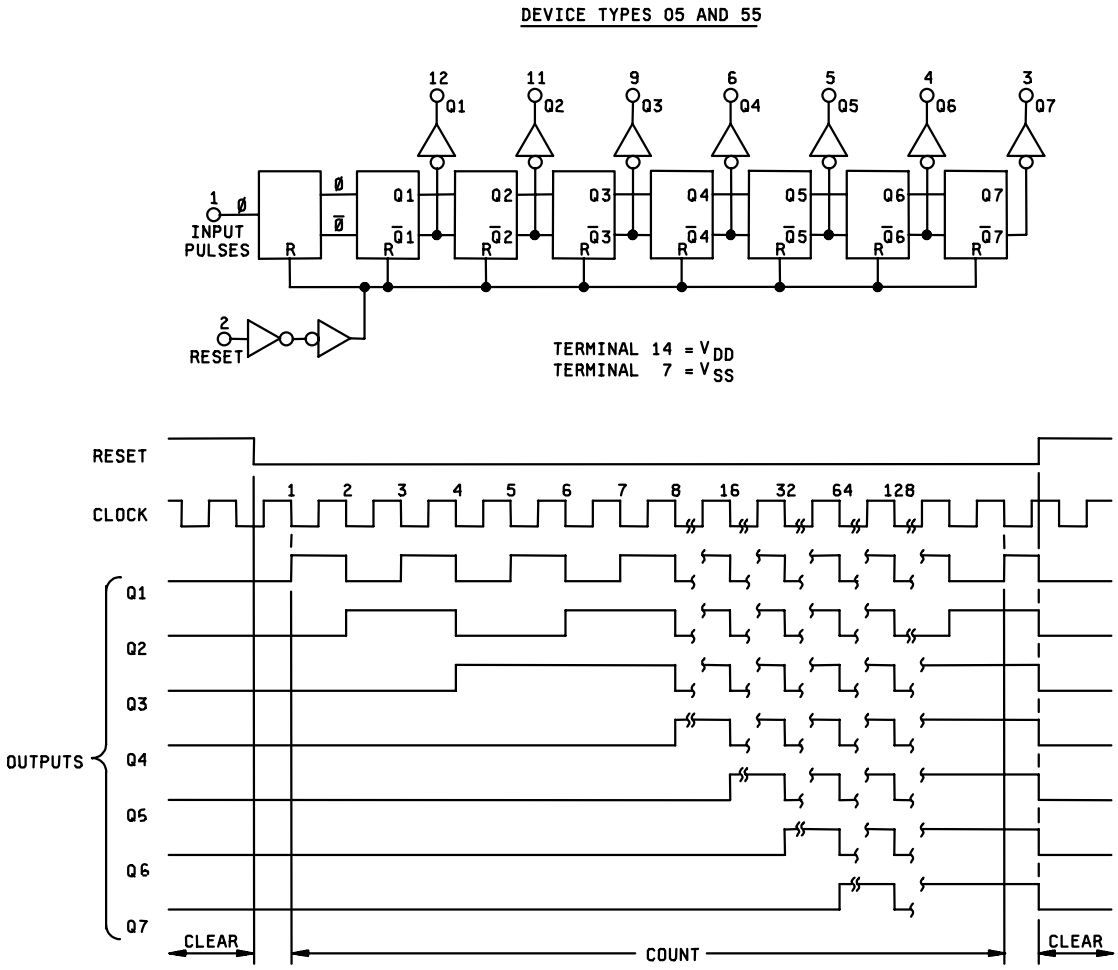

FIGURE 2. Logic diagrams and functional waveforms - Continued.

Device types 01, 04, 51, 54

Inputs				Outputs		
CLOCK	CLOCK ENABLE	RESET	Dn-1	Qn	Nn	"On"
X	H	L	X	Qn-1	Nn-1	"On"-1 *
X	X	H	X	L	L	H
↓	X	L	X	Qn-1	Nn-1	"On"-1 *
↑	L	L	L	L	N-1n-1	"9n"-1
↑	L	L	H	H	N-1n-1	"9n"-1

N = Any decoded output, "1" through "9" for device types 01and 51 and "1" through "7" for device types 04 and 54.

Device types 02 and 52

Inputs						Outputs	
CLOCK	RESET	DATA	PRESET ENABLE	JAM 1	JAM 2	$\overline{Q}$1n	$\overline{Q}$Nn
X	H	X	L	X	X	H	H
X	H	X	H	X	X	Invalid condition	
X	L	X	H	L	L	H	H
X	L	X	H	H	L	L	H
X	L	X	H	L	H	H	L
X	L	X	H	H	H	L	L
↓	L	X	L	X	X	$\overline{Q}$1n-1	$\overline{Q}$Nn-1 *
↑	L	L	L	X	X	H	$\overline{Q}$N-1n-1
↑	L	H	L	X	X	L	$\overline{Q}$N-1n-1

N = Any stage from 2 to 5.

Device types 03, 05, 53, and 55

Inputs		Output state
Data input	RESET	
L	L	No change
L	H	All outputs low
H	L	No change
H	H	All outputs low
↑	L	No change
↑	H	All outputs low
↓	L	Advance one count
↓	H	All outputs low

H = High level voltage.
L = Low level voltage.
* = No change.
↓ = Negative clock transition from time (n-1) to n.
↑ = Positive clock transition from time (n-1) to n.
X = Irrelevant.
n = 1, 2, 3, ….., and is the input/clock counter after reset.

FIGURE 3. Truth tables.

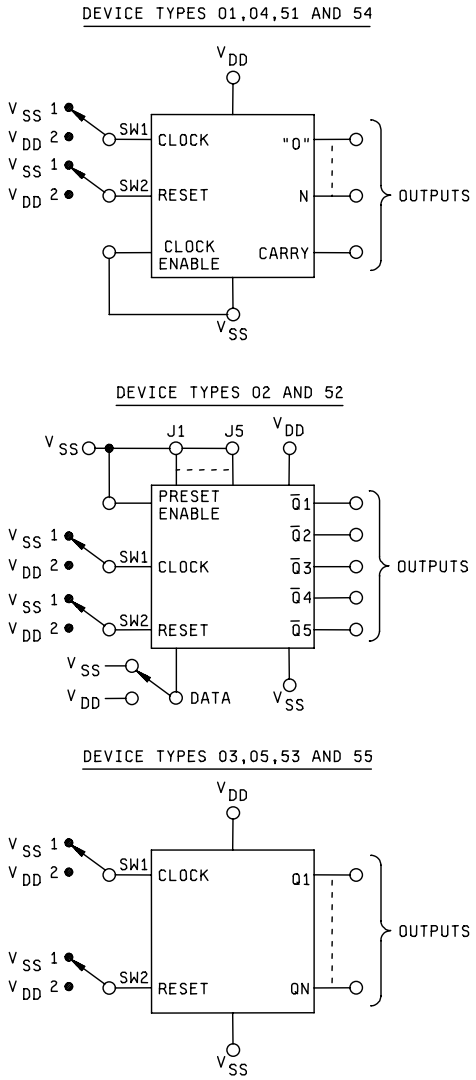

NOTES:

1. Each output shall be measured as specified in table III.
2. For device types 01 through 05, the input-output voltage subscript numbers (V_{IH1}, V_{OH1}, etc.) are matched for each test. Each applicable load current is specified in table III.
3. See figure 2 for logic diagram and functional waveform.
4. To step counter through its sequence, momentarily place SW2 in position 2, then with SW1 increment counter to the to the correct output logic state for measurements. Set device type 02 DATA input high or low to achieve correct input.

FIGURE 4. Test procedures and test circuits for output voltage and current measurements.

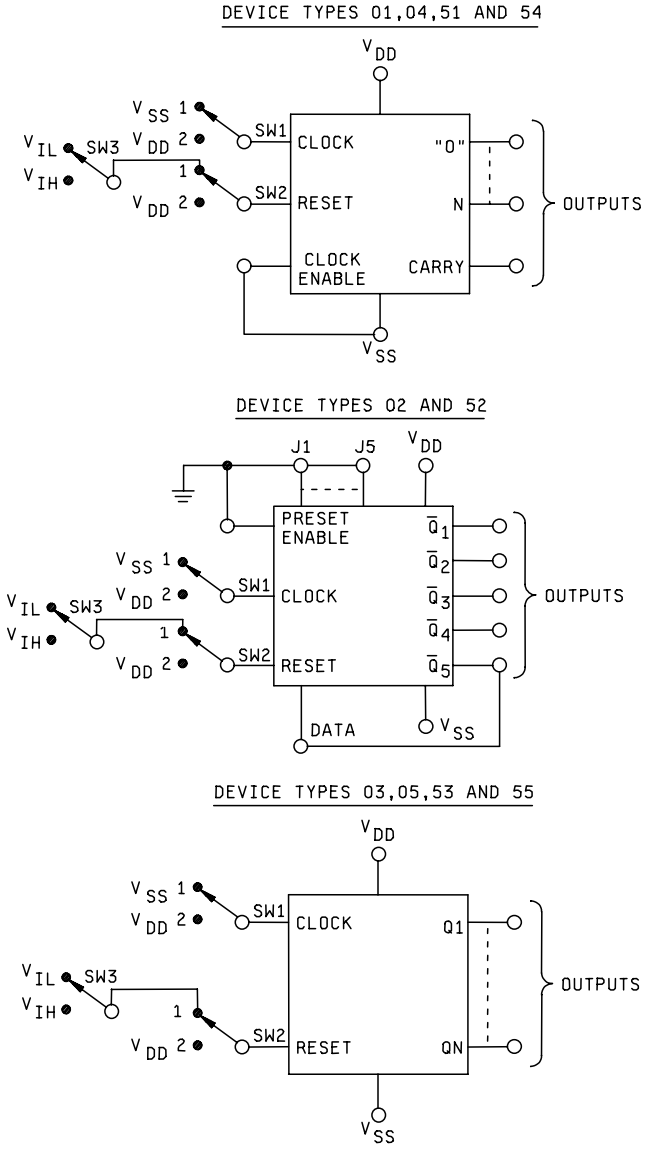

NOTES:

1. All outputs shall be checked for proper operation as specified in table III.
2. To step counter through its sequence, momentarily place SW2 in position 2, then with SW3 in the required logic position, toggle SW1 to increment counter.
3. See figure 2 for logic diagram and functional waveform.
4. Test requirements are considered met if counter returns to its zero count whenever SW3 is momentarily placed in position 2. Further, when SW3 is in position 2, counter will not advance but advances when SW3 is in position 1.

FIGURE 5. Test procedures and test circuits for RESET input voltage tests.

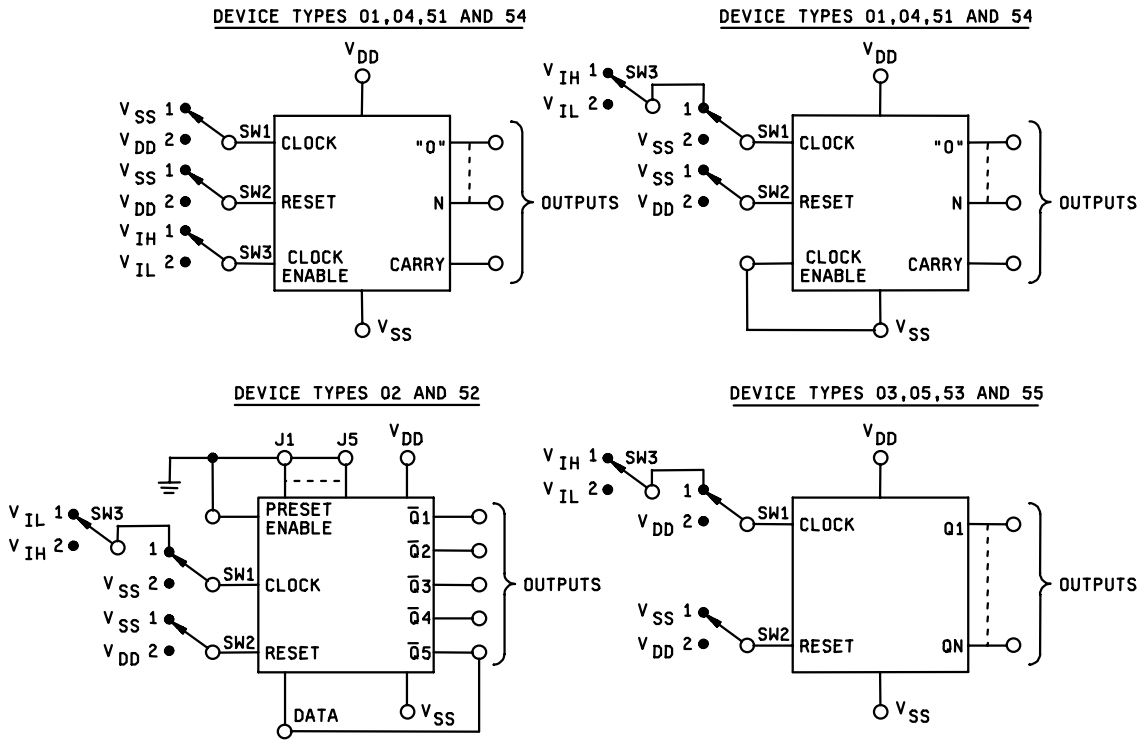

NOTES:

1. All outputs shall be checked for proper operation as specified in table III.
2. To step counter through its sequence, momentarily place SW2 in position 2, then with SW3 in the required logic position, toggle SW1 to increment counter.
3. See figure 2 for logic diagram and functional waveform.
4. Test requirements are considered met, if counter advances when SW3 is in position 2 but does not advance when SW3 is in position 1.

FIGURE 6. Test procedures and test circuits for CLOCK and CLOCK ENABLE input voltage tests.

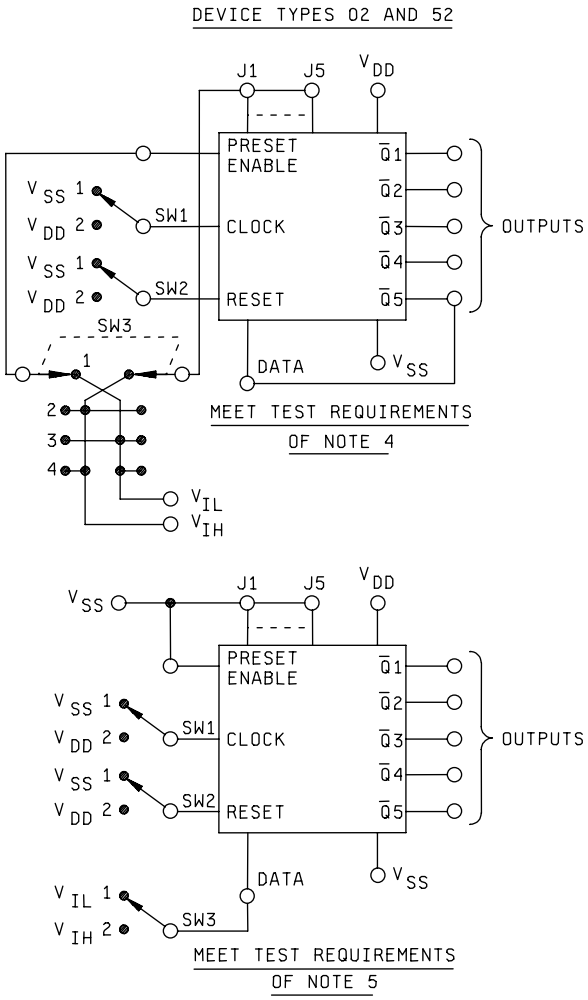

NOTES:

1. All outputs shall be checked for proper operation as specified in table III.
2. To step counter through its sequence, momentarily place SW2 in position 2, then with SW3 in the required logic position, toggle SW1 to increment counter.
3. See figure 2 for logic diagram and functional waveform.
4. Test requirements are considered met if: (a) counter advances with SW3 is in positions 1 and 3; (b) all counter outputs are logic “L” with SW3 in position 2; and (c) all counter outputs are logic “H” with SW3 in position 4.
5. Test requirements are considered met if, with SW3 in position 1, the counter advances to a full count during 5 clock periods with outputs achieving logic “H”. At this point, SW3 is changed to position 2 and after 5 more clock periods, a full count shall be registered with outputs achieving logic “L”.

FIGURE 7. Test procedures and test circuits for JAM, PRESET ENABLE, and DATA input voltage tests.

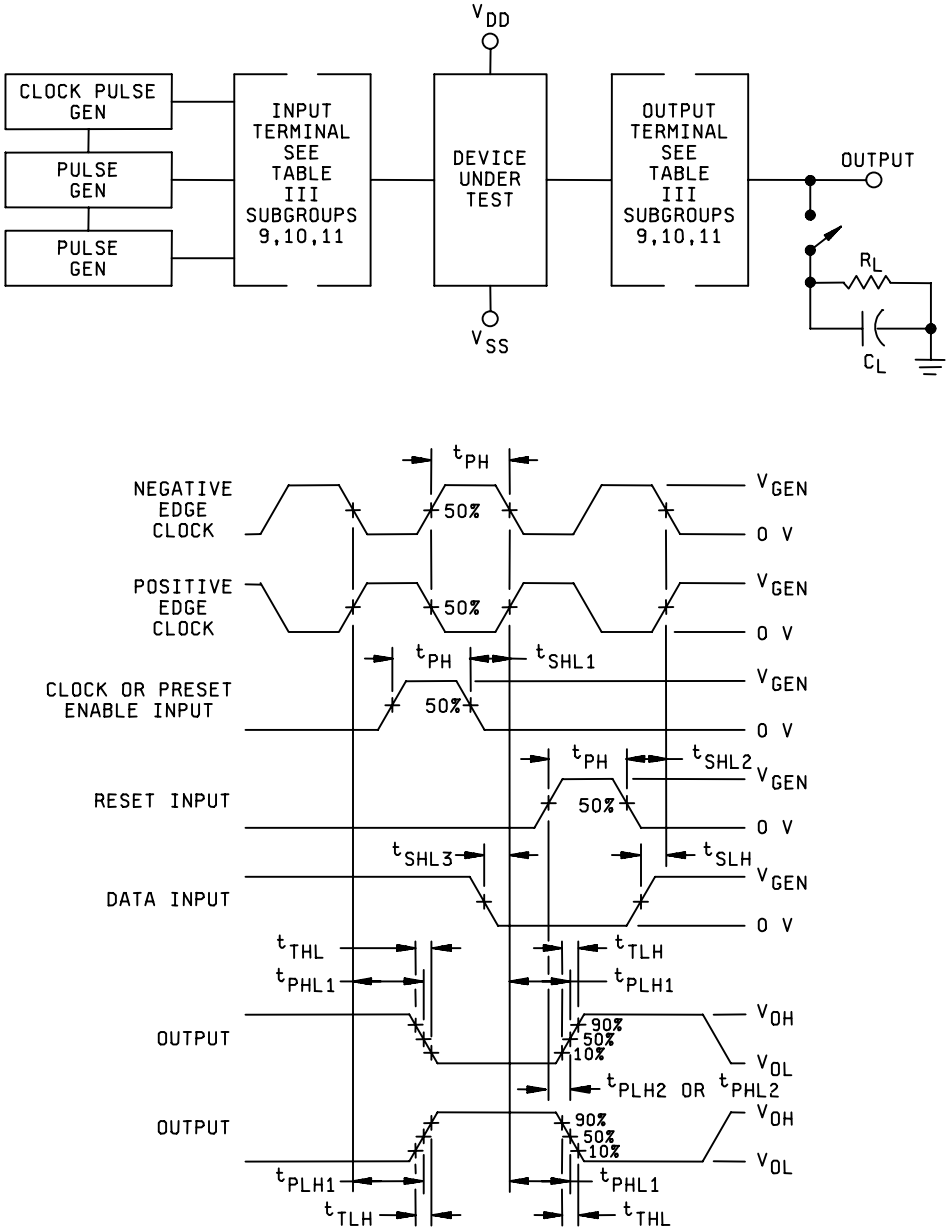

FIGURE 8. Switching time waveforms and test circuit.

Test	Input terminal	Device type	Generator pulse conditions								Load	
			V_{GEN}	PRR at °C		t_{THL} ≤	t_{TLH} ≤	Duty cycle %	t_{PH} at °C		R_L kΩ ±10%	C_L pF
				+25, -55	+125				+25, -55 ≤	125 ≤		
t_{PLH}, t_{PHL} CLOCK to output	CLOCK *	01, 02, 04	5.0 V	450 kHz	350 kHz	15 ns	15 ns	50			200	50
		52, 54	5.0 V	995 kHz	710 kHz	15 ns	15 ns	50			200	50
		03	5.0 V	850 kHz	650 kHz	15 ns	15 ns	50			200	50
		51	5.0 V	2.0 MHz	1.43 MHz	15 ns	15 ns	50			200	50
		05, 53, 55	5.0 V	1.5 MHz	1.1 MHz	15 ns	15 ns	50			200	50
t_{PLH}, t_{PHL} RESET to output	RESET *	01, 02	5.0 V			30 ns	30 ns		500 ns	750 ns	200	50
	CLOCK	01, 02	5.0 V			15 ns	15 ns		1.111 μs	1.429 μs	200	50
	RESET *	03	5.0 V			30 ns	30 ns		1.8 μs	2.7 μs	200	50
	CLOCK	03	5.0 V			15 ns	15 ns		588 ns	769 ns	200	50
	RESET *	04	5.0 V			30 ns	30 ns		400 ns	560 ns	200	50
	CLOCK	04	5.0 V			15 ns	15 ns		1.111 μs	1.429 μs	200	50
	RESET *	05	5.0 V			30 ns	30 ns		650 ns	975 ns	200	50
	CLOCK	05	5.0 V			15 ns	15 ns		333 ns	455 ns	200	50
	RESET *	52, 54	5.0 V			30 ns	30 ns		400 ns	560 ns	200	50
	CLOCK	52, 54	5.0 V			15 ns	15 ns		503 ns	704 ns	200	50
	RESET *	51	5.0 V			30 ns	30 ns		400 ns	560 ns	200	50
	CLOCK	51	5.0 V			15 ns	15 ns		250 ns	350 ns	200	50
	RESET *	53	5.0 V			30 ns	30 ns		450 ns	630 ns	200	50
	CLOCK	53	5.0 V			15 ns	15 ns		333 ns	455 ns	200	50
	RESET *	55	5.0 V			30 ns	30 ns		350 ns	490 ns	200	50
	CLOCK	55	5.0 V			15 ns	15 ns		333 ns	455 ns	200	50

FIGURE 8. Switching time waveforms and test circuit – Continued.

Test	Input terminal	Device type	Generator pulse conditions								Load	
			V_{GEN}	PRR at °C		t_{THL} ≤	t_{TLH} ≤	Duty cycle %	t_{PH} at °C		R_L kΩ ±10%	C_L pF
				+25, -55	+125				+25, -55 ≤	125 ≤		
t_{SLH}, t_{SHL} Input to CLOCK	CLOCK	51	5.0 V	1.876 MHz	1.34 MHz	15 ns	15 ns	50				
	CLOCK	54	5.0 V	995 kHz	710 kHz	15 ns	15 ns	50				
	RESET or * CLOCK ENABLE	01, 04, 51, 54	5.0 V			15 ns			1.0 µs min	1.0 µs min		
	CLOCK	01, 04	5.0 V	450 kHz	350 kHz	15 ns	15 ns	50				
	RESET or * CLOCK ENABLE	02, 52	5.0 V			30 ns			1.0 µs min	1.0 µs min		
	CLOCK	02	5.0 V	450 kHz	350 kHz	15 ns	15 ns	50				
		52	5.0 V	995 kHz	710 kHz	15 ns	15 ns	50				
	DATA	52	5.0 V	834 kHz	595 kHz	15 ns	15 ns	50				
		02	5.0 V	225 kHz	175 kHz	15 ns	15 ns	50				
	RESET	02, 52	5.0 V			30 ns	30 ns		1.0 µs min	1.0 µs min		
	CLOCK	52	5.0 V	995 kHz	710 kHz	15 ns	15 ns	50				
		02	5.0 V	450 kHz	350 kHz	15 ns	15 ns	50				

NOTES:

1. Test conditions grouped by double horizontal lines are simultaneously applicable to the test being performed.
2. Unless otherwise specified, test each output separately.
3. "C_L" conditions include probe and wiring capacitance.
4. Apply input pulses as shown in abbreviated waveforms. See figure 2 for complete functional waveforms.
5. Setup times (t_{SHL} and t_{SLH}) are set to the maximum values given in the test limits columns of table III. Setup time test requirements are considered met if counters advance in the next actuating transition of the clock pulse following the negative transition of the reset, clock enable, or preset enable pulse. Device type 02 "data" of the "data" input logic level with the next positive transition of the clock pulse after a "data" input logic change.
6. For device type 02, the "Q5" output is connected to the "data" input in all switching time tests except the "data" setup time test.
7. The inputs marked with an asterisk designate the measured terminal.
8. Duty cycle and PRR, although not relevant for real-time measurements, are specified to accommodate other measurement techniques.

FIGURE 8. Switching time waveforms and test circuit – Continued.

4. VERIFICATION

4.1 Sampling and inspection. Sampling and inspection procedures shall be in accordance with MIL-PRF-38535 or as modified in the device manufacturer's Quality Management (QM) plan. The modification in the QM plan shall not affect the form, fit, or function as described herein.

4.2 Screening. Screening shall be in accordance with MIL-PRF-38535 and shall be conducted on all devices prior to qualification and conformance inspection. The following additional criteria shall apply:

a. The burn-in test duration, test condition, and test temperature, or approved alternatives shall be as specified in the device manufacturer's QM plan in accordance with MIL-PRF-38535. The burn-in test circuit shall be maintained under document control by the device manufacturer's Technology Review Board (TRB) in accordance with MIL-PRF-38535 and shall be made available to the acquiring or preparing activity upon request. The test circuit shall specify the inputs, outputs, biases, and power dissipation, as applicable, in accordance with the intent specified in test method 1015 of MIL-STD-883.

b. Delete the sequence specified as interim (pre-burn-in) electrical parameters through interim (post-burn-in) electrical parameters of table IA of MIL-PRF-38535 and substitute lines 1 through 7 of table II herein.

c. Burn-in (method 1015 of MIL-STD-883).

(1) Unless otherwise specified in the manufacturers QM plan for static tests (test condition A), ambient temperature (T_A) shall be +125°C minimum. Test duration for each static test shall be 24 hours minimum for class S devices and in accordance with table I of method 1015 for class B devices.

i. For static burn-in I, all inputs shall be connected to 0.0 V.

ii. For static burn-in II, all inputs shall be connected to V_{DD}.

iii. Except for V_{DD} and V_{SS}, the terminal shall be connected through resistors whose value is 2 kΩ to 47 kΩ. The actual measured value of the resistor selected shall not exceed ±20% of its branded value due to use, heat or age.

iv. Output may be open or connected to $V_{DD}/2$.

v. V_{DD} = 12.5 V minimum, 15 V maximum for device types 01, 02, 03, 04, and 05.
V_{DD} = 15 V minimum, 18 V maximum for device types 51, 52, 53, 54, and 55.
$V_{DD}/2 = V_{DD}/2 \pm 1.0$ V for all devices.
V_{SS} = 0.0 V.

(2) Unless otherwise specified in the manufacturers QM plan for dynamic test (test condition D), ambient temperature shall be +125°C minimum. Test duration shall be in accordance with table I of method 1015.

i. Except for V_{DD} and V_{SS}, the terminals shall be connected through resistors whose value is 2 kΩ to 47 kΩ. The actual measured value of the resistor selected shall not exceed ±20% of its branded value due to use, heat or age.

ii. Input signal requirements: Square wave, 50% duty cycle; 25 kHz < PRR < 1 MHz; t_{TLH} and t_{THL} < 1 μs. Voltage level: Minimum = V_{SS} – 0.5 V, +10% V_{DD};
Maximum = V_{DD} + 0.5 V, -10% V_{DD}.

iii. V_{DD} = 12.5 V minimum, 15 V maximum for device types 01, 02, 03, 04, and 05.
V_{DD} = 15 V minimum, 18 V maximum for device types 51, 52, 53, 54, and 55.
$V_{DD}/2 = V_{DD}/2 \pm 1.0$ V.
V_{SS} = 0.0 V.

d. Interim and final electrical test parameters shall be as specified in table II.

e. For class S devices, post dynamic burn-in, or class B devices, post static burn-in, electrical parameter measurements may, at the manufacturer's option, be performed separately or included in the final electrical parameter requirements.

TABLE II. Electrical test requirements.

Line no.	MIL-PRF-38535 test requirements	Class S device 1/			Class B device 1/		
		Ref. par.	Table III Subgroups 2/	Table IV delta limits 3/	Ref. par.	Table III subgroups 2/	Table IV delta limits 3/
1	Interim electrical parameters		1			1	
2	Static burn-in I (method 1015)	4.2c 4.5.2					
3	Same as line 1		1	Δ			
4	Static burn-in II (method 1015)	4.2c 4.5.2			4.2c 4.5.2	4/	
5	Same as line 1	4.2e	1*	Δ	4.2e	1*	Δ
6	Dynamic burn-in (method 1015)	4.2c 4.5.2					
7	Same as line 1	4.2e	1*	Δ			
8	Final electrical parameters (method 5004)		1*, 2, 3, 7, 9			1*, 2, 3, 7, 9	
9	Group A test requirements (method 5005)	4.4.1	1, 2, 3, 4, 7, 9, 10, 11		4.4.1	1, 2, 3, 4, 7, 9, 10, 11	
10	Group B test when using method 5005 QCI option	4.4.2	1, 2, 3, 7, 9, 10, 11	Δ			
11	Group C end-point electrical parameters (method 5005)				4.4.3	1, 2, 3	Δ
12	Group D end-point electrical parameters (method 5005)	4.4.4	1, 2, 3		4.4.4	1, 2, 3	

1/ Blank spaces indicate tests are not applicable.

2/ * indicates PDA applies to subgroup 1 (see 4.2.1).

3/ Δ indicates delta limits shall be required only on table III subgroup 1, where specified, and the delta values shall be computed with reference to the previous interim electrical parameters.

4/ The device manufacturer may at his option either perform delta measurements or within 24 hours after burn-in (or removal of bias) perform the final electrical parameter measurements.

4.2.1 Percent defective allowable (PDA).

a. The PDA for class S devices shall be 5 percent for static burn-in and 5 percent for dynamic burn-in, based on the exact number of devices submitted to each separate burn-in.

b. Static burn-in I and II failure shall be cumulative for determining the PDA.

c. The PDA for class B devices shall be in accordance with MIL-PRF-38535 for static burn-in. Dynamic burn-in is not required.

d. Those devices whose measured characteristics, after burn-in, exceed the specified delta (Δ) limits or electrical parameter limits specified in table III, subgroup 1, are defective and shall be removed from the lot. The verified failures divided by the total number of devices in the lot initially submitted to burn-in shall be used to determine the percent defective for the lot and the lot shall be accepted or rejected based on the specified PDA.

4.3 Qualification inspection. Qualification inspection shall be in accordance with MIL-PRF-38535.

4.3.1 Qualification extension. When authorized by the qualifying activity for qualification inspection, if a manufacturer qualifies to a 51-55 device type which is manufactured identically to a 01 - 05 device type on this specification, then the 01- 05 device type may be part I qualified by conducting only worse case group A electrical tests and any electrical tests specified as additional group C subgroups and submitting data in accordance with MIL-PRF-38535.

4.4 Technology Conformance inspection (TCI). Technology conformance inspection shall be in accordance with MIL-PRF-38535 and herein for groups A, B, C, D, and E inspections (see 4.4.1 through 4.4.5).

4.4.1 Group A inspection. Group A inspection shall be in accordance with table III of MIL-PRF-38535 and as follows:

a. Tests shall be performed in accordance with table II herein.

b. Subgroups 5, 6, and 8 shall be omitted.

c. Subgroup 4 (C_I measurement) shall be measured only for initial qualification and after process or design changes that may affect input capacitance. Capacitance shall be measured between the designated terminal and V_{SS} at a frequency of 1 MHz.

d. Subgroups 9 and 11 shall be measured only for initial qualification and after process or design changes which may affect dynamic performance.

e. At the manufacturer’s option, test tapes may be programmed simultaneously for each identical section provided that each output is measured and each specified input combination is tested.

f. When device types 01 through 05 are qualified by extension (see 4.3.1), these device types will be inspected (QCI) according to the requirements for device types 51 through 55, respectively.

4.4.2 Group B inspection. Group B inspection shall be in accordance with table II of MIL-PRF-38535.

4.4.3 Group C inspection. Group C inspection shall be in accordance with table IV of MIL-PRF-38535 and as follows:

a. End-point electrical parameters shall be as specified in table II herein. Delta limits shall apply only to subgroup 1 of group C inspection and shall consist of tests specified in table IV herein.

b. The steady-state life test duration, test condition, and test temperature, or approved alternatives shall be as specified in the device manufacturer's QM plan in accordance with MIL-PRF-38535. The burn-in test circuit shall be maintained under document control by the device manufacturer's Technology Review Board (TRB) in accordance with MIL-PRF-38535 and shall be made available to the acquiring or preparing activity upon request. The test circuit shall specify the inputs, outputs, biases, and power dissipation, as applicable, in accordance with the intent specified in test method 1005 of MIL-STD-883.

c. When device types 01 through 05 are qualified by extension (see 4.3.1), these device types will be inspected (QCI) according to the requirements for device types 51 through 55, respectively.

TABLE III. Group A inspection for device type 01.

Symbol	MIL-STD-883 method	Cases E,F, N, Z	Terminal conditions 4/																Measured terminal	Limits						Unit
			1	2	3	4	5	6	7	8	9	10	11	12	13	14	15	16		Subgroup 1 T_C = 25°C		Subgroup 2 T_C = 125°C		Subgroup 3 T_C = -55°C		
		Test no.	5 OUT	1 OUT	0 OUT	2 OUT	6 OUT	7 OUT	3 OUT	V_{SS}	8 OUT	4 OUT	9 OUT	CARRY OUT	CLOCK ENABLE	CLOCK	RESET	V_{DD}		Min	Max	Min	Max	Min	Max	
V_{IC} (POS)		1													1 mA	1 mA	1 mA	GND	EACH INPUT		1.5					V
V_{IC} (NEG)		2								GND					-1 mA	-1 mA	-1 mA		EACH INPUT		-6.0					V
I_{IL1} 6/	3009	3								"					GND	GND	GND	15.0 V	ALL INPUTS TOGETHER		-300.0					nA
I_{IL2}	3009	4								"					GND	GND	GND	"	EACH INPUT		-100.0		-100.0			"
I_{IH1}	3010	5								"					15.0 V	15.0 V	15.0 V	"	ALL INPUTS TOGETHER		300.0					"
I_{IH2}	3010	6								"					15.0 V	15.0 V	15.0 V	"	EACH INPUT		100.0		100.0			"
V_{OH1} 1/ 2/	3006	7	I_{OH1}	I_{OH1}	I_{OH1}	I_{OH1}	I_{OH1}	I_{OH1}	I_{OH1}	"	I_{OH1}	I_{OH1}	I_{OH1}	I_{OH2}	IN	IN	IN	5.0 V	EACH OUTPUT	4.5		4.5		4.5		V
V_{OL1}	3007	8	I_{OL1}	I_{OL1}	I_{OL1}	I_{OL1}	I_{OL1}	I_{OL1}	I_{OL1}	"	I_{OL1}	I_{OL1}	I_{OL1}	I_{OL2}	"	"	"	5.0 V	EACH OUTPUT							mV
V_{OH2}	3006	9	OUT	OUT	OUT	OUT	OUT	OUT	OUT	"	OUT	OUT	OUT	OUT	"	"	"	12.5 V	EACH OUTPUT	11.50		11.50		11.50		V
V_{OL2}	3007	10	"	"	"	"	"	"	"	"	"	"	"	"	"	"	"	12.5 V	EACH OUTPUT				1.25		1.25	"
V_{IL} 1/ 2/	Fig. 6	11	"	"	"	"	"	"	"	"	"	"	"	"	"	"	"	5.0 V	CLOCK ENABLE	1.10		0.85		1.35		"
V_{IH}	"	12	"	"	"	"	"	"	"	"	"	"	"	"	"	"	"	"	CLOCK ENABLE				3.60		3.95	"
V_{IL}	"	13	"	"	"	"	"	"	"	"	"	"	"	"	"	"	"	"	CLOCK	1.10		0.85		1.35		"
V_{IH}	"	14	"	"	"	"	"	"	"	"	"	"	"	"	"	"	"	"	CLOCK				3.60		3.95	"
V_{IL}	Fig. 5	15	"	"	"	"	"	"	"	"	"	"	"	"	"	"	"	"	RESET	1.10		0.85		1.35		"
V_{IH}	Fig. 5	16	"	"	"	"	"	"	"	"	"	"	"	"	"	"	"	"	RESET	3.80			3.60		3.95	"
I_{SS} 3/	3005	17								"					GND	GND	15.0 V	15.0 V	V_{SS}		-0.5					µA
	"	18								"					"	GND	GND	"	V_{SS}	3.80	"		"			"
	"	19								"					"	15.0 V	"	"	None		"	-5.0	"			"
	"	20								"					"	GND	"	"	V_{SS}		"		"			"
	"	21								"					"	15.0 V	"	"	None		"		"			"
	"	22								"					"	GND	"	"	V_{SS}		"		"			"
	"	23								"					"	15.0 V	"	"	None		"		"			"
	"	24								"					"	GND	"	"	V_{SS}		"		"			"
	"	25								"					"	15.0 V	"	"	None		"		"			"
	"	26								"					"	GND	"	"	V_{SS}		"		"			"
	"	27								"					"	15.0 V	"	"	V_{SS}		"		"			"
	"	28								"					"	GND	"	"	None		"		"			"
	"	29								"					"	15.0 V	"	"	V_{SS}		"		"			"
	"	30								"					"	GND	"	"	None		"		"			"
	"	31								"					"	15.0 V	"	"	V_{SS}		"		"			"
	"	32								"					"	GND	"	"	None		"		"			"
	"	33								"					"	15.0 V	"	"	V_{SS}		"		"			"
	"	34								"					"	GND	"	"	None		"		"			"
	"	35								"					"	15.0 V	"	"	V_{SS}		"		"			"
	"	36								"					15.0V	15.0 V	"	"	V_{SS}		"		"			"

See footnotes at end of device type 05.

TABLE III. Group A inspection for device type 01 – Continued.

Symbol	MIL-STD-883 method	Cases E,F, N,Z	Terminal conditions 4/																Measured terminal	Limits						Unit
			1	2	3	4	5	6	7	8	9	10	11	12	13	14	15	16		Subgroup 4 T_C = 25°C						
		Test no.	5 OUT	1 OUT	0 OUT	2 OUT	6 OUT	7 OUT	3 OUT	V_{SS}	8 OUT	4 OUT	9 OUT	CARRY OUT	CLOCK ENABLE	CLOCK	RESET	V_{DD}		Min	Max	Min	Max	Min	Max	
C_I 2/	3012	37								GND					IN	IN	IN	GND	EACH INPUT		12.0					pF
																				Subgroup 7 T_C = 25°C		Subgroup 8 T_C = 125°C		Subgroup 8 T_C = -55°C		
																				Min	Max	Min	Max	Min	Max	
Truth table test 3/	3014	38	L	L	H	L	L	L	L	GND	L	L	L	H	GND	5.0 V	5.0 V	5.0 V	EACH OUTPUT							
	"	39	L	L	H	L	L	L	L	"	L	L	L	H	"	5.0 V	GND	5.0 V								
	"	40	L	H	L	L	L	L	L	"	L	L	L	H	"	PA	"	"	"							
	"	41	L	L	L	H	L	L	L	"	L	L	L	H	"	"	"	"	"							
	"	42	L	L	L	L	L	L	H	"	L	L	L	H	"	"	"	"	"							
	"	43	L	L	L	L	L	L	L	"	L	H	L	H	"	"	"	"	"							
	"	44	H	L	L	L	L	L	L	"	L	L	L	L	"	"	"	"	"							
	"	45	L	L	L	L	H	L	L	"	L	L	L	L	"	"	"	"	"							
	"	46	L	L	L	L	L	H	L	"	L	L	L	L	"	"	"	"	"							
	"	47	L	L	L	L	L	L	L	"	H	L	L	L	"	"	"	"	"							
	"	48	L	L	L	L	L	L	L	"	L	L	H	L	"	"	"	"	"							
	"	49	L	L	H	L	L	L	L	"	L	L	L	H	"	"	"	"	"							
	"	50	L	H	L	L	L	L	L	"	L	L	L	H	"	"	"	"	"							
	"	51	L	H	L	L	L	L	L	"	L	L	L	H	5.0 V	5.0 V	"	"	"							
	"	52	L	H	L	L	L	L	L	"	L	L	L	H	5.0 V	PA	"	"	"							
	"	53	L	L	L	H	L	L	L	"	L	L	L	H	GND	5.0 V	"	"	"							
	"	54	X	X	X	X	X	X	X	"	X	X	X	X	"	PC	"	"	"							
	"	55	H	L	L	L	L	L	L	"	L	L	L	L	"	5.0 V	"	"	"							
	"	56	H	L	L	L	L	L	L	"	L	L	L	L	"	GND	"	"	"							
	"	57	L	L	H	L	L	L	L	"	L	L	L	H	"	GND	5.0 V	"	"							
	"	58	L	L	H	L	L	L	L	"	L	L	L	H	"	GND	GND	"	"							
	"	59	L	H	L	L	L	L	L	"	L	L	L	H	"	5.0 V	"	"	"							
	"	60	X	X	X	X	X	X	X	"	X	X	X	X	"	PD	"	"	"							
	"	61	H	L	L	L	L	L	L	"	L	L	L	L	"	5.0 V	"	"	"							
	"	62	L	L	H	L	L	L	L	"	L	L	L	H	"	5.0 V	5.0 V	"	"							
	"	63	L	L	H	L	L	L	L	"	L	L	L	H	"	5.0 V	GND	"	"							
																				Subgroup 9 T_C = 25°C		Subgroup 10 T_C = 125°C		Subgroup 11 T_C = -55°C		
																				Min	Max	Min	Max	Min	Max	
t_{PHL1}	3003	64								GND				OUT	GND	IN	GND	5.0 V	CLOCK TO OUTPUT	.013	1.45	.018	2.18	.013	1.45	µs
t_{PHL1} 1/ 2/	"	65	OUT	OUT	OUT	OUT	OUT	OUT	OUT	"	OUT	OUT	OUT		"	"	GND	"		"	1.80	"	2.70	"	1.80	"
t_{PLH1}	"	66								"				OUT	"	"	GND	"	CLOCK TO OUTPUT	"	1.45	"	2.18	"	1.45	"
t_{PLH1}	"	67	OUT	OUT	OUT	OUT	OUT	OUT	OUT	"	OUT	OUT	OUT		"	"	GND	"		"	1.80	"	2.70	"	1.80	"
t_{PLH2}	"	68			OUT					"					"	"	IN	"	RESET TO OUTPUT	"	1.80	"	2.70	"	1.80	"
t_{PLH2}	"	69								"				OUT	"	"	"	"		"	1.45	"	2.18	"	1.45	"
t_{PHL2}	"	70	OUT	OUT		OUT	OUT	OUT	OUT	"	OUT	OUT	OUT		"	"	"	"	RESET TO OUTPUT	"	1.80	"	2.70	"	1.80	"
t_{THL}	3004	71								"				OUT	"	"	GND	"	OUTPUT	10	550	14	825	10	550	ns
t_{THL}	"	72	OUT	OUT	OUT	OUT	OUT	OUT	OUT	"	OUT	OUT	OUT		"	"	"	"	OUTPUT	.010	2.25	.014	3.38	.010	2.25	µs
t_{TLH}	3004	73								"				OUT	"	"	"	"	OUTPUT	10	550	14	825	10	550	ns
t_{TLH}	"	74	OUT	OUT	OUT	OUT	OUT	OUT	OUT	"	OUT	OUT	OUT		"	"	"	"	OUTPUT	.010	2.25	.014	3.38	.010	2.25	µs
t_{SHL1} 2/										"				OUT	IN	"	"	"	CLOCK ENABLE TO CLOCK	500		750			500	ns
t_{SHL1}	75	76	OUT	OUT	OUT	OUT	OUT	OUT	OUT	"	OUT	OUT	OUT		IN	"	"	"	CLOCK ENABLE TO CLOCK		750		1125		750	ns
t_{SHL2}		77			OUT					"					GND	"	IN	"	RESET TO CLOCK				1125		750	ns

See footnotes at end of device type 05.

TABLE III. Group A inspection for device type 02.

Symbol	MIL-STD-883 method	Cases E,F, N, Z	Terminal conditions 4/																Measured terminal	Limits						Unit
			1	2	3	4	5	6	7	8	9	10	11	12	13	14	15	16		Subgroup 1 T_C = 25°C		Subgroup 2 T_C = 125°C		Subgroup 3 T_C = -55°C		
		Test no.	DATA	JAM 1	JAM 2	Q2	Q1	Q3	JAM 3	V_{SS}	JAM 4	PRESET ENABLE	Q4	JAM 5	Q5	CLOCK	RESET	V_{DD}		Min	Max	Min	Max	Min	Max	
V_{IC} (POS)		1	1mA	1mA	1mA				1mA		1mA	1mA		1mA		1mA	1mA	GND	EACH INPUT		1.5					V
V_{IC} (NEG)		2	-1mA	-1mA	-1mA				-1mA	GND	-1mA	-1mA		-1mA		-1mA	-1mA		EACH INPUT		-6.0					V
I_{IL1} 6/	3009	3	GND	GND	GND				GND	GND	GND	GND		GND		GND	GND	15.0V	ALL INPUTS TOGETHER		-900.0					nA
I_{IL2}	3009	4	GND	GND	GND				GND	"	GND	GND		GND		GND	GND	"	EACH INPUT		-100.0		-100.0			"
I_{IH1}	3010	5	15.0V	15.0V	15.0V				15.0V	"	15.0V	15.0V		15.0V		15.0V	15.0V	"	ALL INPUTS TOGETHER		900.0					"
I_{IH2}	3010	6	15.0V	15.0V	15.0V				15.0V	"	15.0V	15.0V		15.0V		15.0V	15.0V	"	EACH INPUT		100.0		100.0			"
V_{OH1} 1/ 2/	3006	7	IN	GND	GND	I_{OH3}	I_{OH3}	I_{OH3}	GND	"	GND	GND	I_{OH3}	GND	I_{OH2}	IN	IN	5.0V	EACH OUTPUT	4.5		4.5		4.5		V
V_{OL1}	3007	8	"	"	"	I_{OL1}	$_{OL1}$	I_{OL1}	"	"	"	"	I_{OL1}	"	I_{OL2}	"	"	5.0V	EACH OUTPUT				500		500	mV
V_{OH2}	3006	9	"	"	"	OUT	OUT	OUT	"	"	"	"	OUT	"	OUT	"	"	12.5V	EACH OUTPUT	11.25		11.25		11.25		V
V_{OL2}	3007	10	"	"	"	"	"	"	"	"	"	"	"	"	"	"	"	12.5V	EACH OUTPUT		1.25				1.25	"
V_{IL} 1/ 2/	Fig. 5	11	"	"	"	"	"	"	"	"	"	"	"	"	"	"	"	5.0V	RESET	1.10		0.85		1.35		
V_{IH}	Fig. 5	12	"	"	"	"	"	"	"	"	"	"	"	"	"	"	"	"	RESET		3.80		3.60		3.95	"
V_{IL}	Fig. 7	13	"	IN	IN	"	"	"	IN	"	IN	IN	"	IN	"	"	"	"	PRESET ENABLE	1.10		0.85		1.35	"	"
V_{IH}	"	14	"	"	"	"	"	"	"	"	"	"	"	"	"	"	"	"	PRESET ENABLE		3.80				3.95	"
V_{IL}	"	15	"	"	"	"	"	"	"	"	"	"	"	"	"	"	"	"	EACH JAM INPUT	1.10		0.85		1.35		"
V_{IH}	"	16	"	"	"	"	"	"	"	"	"	"	"	"	"	"	"	"	EACH JAM INPUT		3.80				3.95	"
V_{IL}	Fig. 6	17	"	GND	GND	"	"	"	GND	"	GND	GND	"	GND	"	"	"	"	CLOCK	1.10		0.85		1.35		"
V_{IH}	Fig. 6	18	"	"	"	"	"	"	"	"	"	"	"	"	"	"	"	"	CLOCK		3.80		3.60		3.95	"
V_{IH}	Fig. 7	19	"	"	"	"	"	"	"	"	"	"	"	"	"	"	"	"	DATA		3.80		3.60		3.95	"
V_{IL}	Fig. 7	20	"	"	"	"	"	"	"	"	"	"	"	"	"	"	"	"	DATA	1.10		0.85		1.35		
I_{SS} 3/	3005	21	GND	15.0V	15.0V				15.0V	"	15.0V	15.0V					15.0V	15.0V	V_{SS}							µA
	"	22	"	"	15.0V				GND	"	GND	"		"		GND	GND	"	V_{SS}		"		"		"	"
	"	23	"	"	GND				15.0V	"	"	"	15.0V	"	GND	GND	"	"	V_{SS}	-0.5	"	-5.0	"		"	"
	"	24	"	"	GND				15.0V	"	"	"		"		15.0V	"	"	None		"		"			"
	"	25	"	"	GND				15.0V	"	"	GND		"		15.0V	"	"	V_{SS}		"		"			"
	"	26	15.0V	GND	15.0V				GND	"	15.0V	15.0V		GND		GND	"	"	V_{SS}		"		"			"
	"	27	"	"	"				GND	"	"	15.0V		"		15.0V	"	"	None		"		"			"
	"	28	"	"	"				GND	"	"	GND		"		15.0V	"	"	V_{SS}		"		"			"
	"	29	"	"	"				15.0V	"	"	15.0V		"		15.0V	"	"	V_{SS}		"		"			"

See footnotes at end of device type 05.

TABLE III. Group A inspection for device type 02 – Continued.

Symbol	MIL-STD-883 method	Cases E,F, Z,N	Terminal conditions 4/																Measured terminal	Limits						Unit
			1	2	3	4	5	6	7	8	9	10	11	12	13	14	15	16		Subgroup 4 T_C = 25°C						
		Test no.	DATA	JAM 1	JAM 2	Q2	Q1	Q3	JAM 3	V_{SS}	JAM 4	PRESET ENABLE	Q4	JAM 5	Q5	CLOCK	RESET	V_{DD}		Min	Max	Min	Max	Min	Max	
C_i 2/	3012	30	IN	IN	IN				IN	GND	IN	IN		IN		IN	IN	GND	EACH INPUT		12.0					pF
																				Subgroup 7 T_C = 25°C		Subgroup 8 T_C = 125°C		Subgroup 8 T_C = -55°C		
																				Min	Max	Min	Max	Min	Max	
Truth table test 3/	3014	31	5.0V	5.0V	5.0V	L	L	L	5.0V	GND	5.0V	5.0V	L	5.0V	L	5.0V	GND	5.0V	EACH OUTPUT							
	“	32	5.0V	5.0V	5.0V	H	H	H	5.0V	“	5.0V	5.0V	H	5.0V	H	“	5.0V	“								
	“	33	5.0V	GND	GND	H	H	H	GND	“	GND	GND	H	GND	H	“	5.0V	“	“							
	“	34	GND	GND	“	H	H	H	GND	“	“	GND	H	GND	H	“	GND	“	“							
	“	35	5.0V	5.0V	“	H	H	H	5.0V	“	“	GND	H	5.0V	H	“	“	“	“							
	“	36	“	5.0V	“	H	L	L	5.0V	“	“	5.0V	H	5.0V	L	“	“	“	“							
	“	37	“	5.0V	“	H	L	L	5.0V	“	“	GND	H	5.0V	L	“	“	“	“							
	“	38	“	GND	“	H	L	L	GND	“	“	“	H	GND	L	GND	“	“	“							
	“	39	“	“	“	L	L	H	“	“	“	“	L	“	H	5.0V	“	“	“							
	“	40	GND	“	“	L	L	H	“	“	“	“	L	“	H	5.0V	“	“	“							
	“	41	GND	“	“	L	L	H	“	“	“	“	L	“	H	GND	“	“	“							
	“	42	GND	“	“	L	H	L	“	“	“	“	H	“	L	5.0V	“	“	“							
	“	43	5.0V	“	“	L	H	L	“	“	“	“	H	“	L	5.0V	“	“	“							
	“	44	“	“	“	L	H	L	“	“	“	“	H	“	L	GND	“	“	“							
	“	45	“	“	“	H	L	L	“	“	“	“	L	“	H	5.0V	“	“	“							
	“	46	“	“	“	H	H	H	“	“	“	“	H	“	H	5.0V	5.0V	“	“							
	“	47	“	“	“	H	H	H	“	“	“	“	H	“	H	5.0V	GND	“	“							
	“	48	“	5.0V	5.0V	H	H	H	“	“	5.0V	“	H	“	H	GND	“	“	“							
	“	49	“	5.0V	5.0V	L	L	H	“	“	5.0V	5.0V	L	“	H	“	“	“	“							
	“	50	“	5.0V	5.0V	L	L	H	“	“	5.0V	GND	L	“	H	“	“	“	“							
	“	51	“	GND	GND	L	L	H	5.0V	“	GND	GND	L	5.0V	H	“	“	“	“							
	“	52	“	“	“	H	H	L	“	“	“	5.0V	H	“	L	“	“	“	“							
	“	53	“	“	“	H	H	L	“	“	“	GND	H	“	L	“	“	“	“							
	“	54	“	“	“	H	H	L	“	“	“	5.0V	H	“	L	“	“	“	“							
	“	55	“	“	“	H	H	L	“	“	“	5.0V	H	“	L	5.0V	“	“	“							
	“	56	“	“	“	H	H	L	“	“	“	GND	H	“	L	5.0V	“	“	“							
	“	57	GND	5.0V	5.0V	H	H	L	GND	“	5.0V	GND	H	GND	L	GND	“	“	“							
	“	58	“	“	“	L	L	H	“	“	“	5.0V	L	“	H	“	“	“	“							
	“	59	“	“	“	L	L	H	“	“	“	GND	L	“	H	“	“	“	“							
	“	60	“	“	“	L	L	H	“	“	“	5.0V	L	“	H	“	“	“	“							
	“	61	“	“	“	L	L	H	“	“	“	5.0V	L	“	H	5.0V	“	“	“							
	“	62	“	“	“	L	L	H	“	“	“	GND	L	“	H	5.0V	“	“	“							
	“	63	5.0V	GND	“	L	H	H	“	“	“	5.0V	L	“	H	GND	“	“	“							
	“	64	“	GND	“	L	H	H	“	“	“	GND	L	“	H	GND	“	“	“							
	“	65	“	GND	“	H	L	H	“	“	“	GND	H	“	L	5.0V	“	“	“							
	“	66	“	5.0V	GND	H	L	H	“	“	“	5.0V	L	“	H	GND	“	“	“							
	“	67	“	5.0V	GND	H	L	H	“	“	“	5.0V	L	“	H	5.0V	“	“	“							
	“	68	“	5.0V	GND	H	L	H	“	“	“	GND	L	“	H	5.0V	“	“	“							
	“	69	GND	“	“	H	H	H	“	“	“	“	H	“	H	5.0V	5.0V	“	“							
	“	70	“	“	“	H	H	H	“	“	“	“	H	“	H	GND	“	“	“							
	“	71	“	“	“	H	H	H	“	“	“	“	H	“	H	5.0V	“	“	“							
	“	72	“	“	“	H	H	H	“	“	“	“	H	“	H	GND	“	“	“							
	“	73	“	“	“	H	H	H	“	“	“	“	H	“	H	5.0V	“	“	“							

See footnotes at end of device type 05.

TABLE III. Group A inspection for device type 02 – Continued.

Symbol	MIL-STD-883 method	Cases E,F, N, Z	Terminal conditions 4/																Measured terminal	Limits						Unit
			1	2	3	4	5	6	7	8	9	10	11	12	13	14	15	16		Subgroup 9 T_C = 25°C		Subgroup 10 T_C = 125°C		Subgroup 11 T_C = -55°C		
		Test no.	DATA	JAM 1	JAM 2	Q2	Q1	Q3	JAM 3	V_{SS}	JAM 4	PRESET ENABLE	Q4	JAM 5	Q5	CLOCK	RESET	V_{DD}		Min	Max	Min	Max	Min	Max	
t_{PHL1} 1/ 2/	3003	74	IN	GND	GND				GND	GND	GND	GND		GND	OUT	IN	GND	5.0V	CLOCK TO OUTPUT	.013	1.45	.018	2.18	.013	1.45	µs
t_{PHL1}	"	75	"	"	"	OUT	OUT	OUT	"	"	"	"	OUT	"		"	"	"		"	1.80	"	2.70	"	1.80	"
t_{PLH1}	"	76	"	"	"				"	"	"	"		"	OUT	"	"	"	CLOCK TO OUTPUT	"	1.45	"	2.18	"	1.45	"
t_{PLH1}	"	77	"	"	"	OUT	OUT	OUT	"	"	"	"	OUT	"		"	"	"		"	1.80	"	2.70	"	1.80	"
t_{PLH2}	"	78	"	"	"				"	"	"	"		"	OUT	"	IN	"	RESET TO OUTPUT	"	1.45	"	2.18	"	1.45	"
t_{PLH2}	"	79	"	"	"	OUT	OUT	OUT	"	"	"	"	OUT	"		"	IN	"		"	1.80	"	2.70	"	1.80	"
t_{THL}	3004	80	"	"	"				"	"	"	"		"	OUT	"	GND	"	OUTPUTS	10	550	14	825	10	550	ns
t_{THL}	"	81	"	"	"	OUT	OUT	OUT	"	"	"	"	OUT	"		"	GND	"	OUTPUTS	.010	2.25	.014	3.38	.010	2.25	µs
t_{TLH1} 1/ 2/	3004	82	IN	GND	GND				GND	GND	GND	GND		"	OUT	"	GND	"	OUTPUTS	10	550	14	825	10	550	ns
t_{TLH1}	"	83	"	"	"	OUT	OUT	OUT	"	"	"	GND	OUT	"		"	GND	"	OUTPUTS	.010	2.25	.014	3.38	.010	2.25	µs
t_{SHL1} 2/		84	"	"	"	"	"	"	"	"	"	IN	"	"	"	"	"	"	PRESET TO CLOCK		750		1125		750	ns
t_{SHL2}		85	"	"	"	"	"	"	"	"	"	GND	"	"	"	"	IN	"	RESET TO CLOCK				1125		750	"
t_{SHL3}		86	"	"	"	"	"	"	"	"	"	GND	"	"	"	"	GND	"	DATA TO CLOCK	750			750		500	"
t_{SLH3}		87	"	"	"	"	"	"	"	"	"	GND	"	"	"	"	GND	"	DATA TO CLOCK	500			750		500	"
																				500						

See footnotes at end of device type 05.

TABLE III. Group A inspection for device type 03.

Symbol	MIL-STD-883 method	Cases E,F, N, Z	Terminal conditions 4/																Measured terminal	Limits						Unit
			1	2	3	4	5	6	7	8	9	10	11	12	13	14	15	16		Subgroup 1 T_C = 25°C		Subgroup 2 T_C = 125°C		Subgroup 3 T_C = -55°C		
		Test no.	Q12	Q13	Q14	Q6	Q5	Q7	Q4	V_{SS}	Q1	CLOCK	RESET	Q9	Q8	Q10	Q11	V_{DD}		Min	Max	Min	Max	Min	Max	
V_{IC} (POS)		1										1mA	1mA					GND	EACH INPUT		1.5					V
V_{IC} (NEG)		2								GND		-1mA	-1mA						EACH INPUT		-6					V
I_{IL1} 6/	3009	3								"		GND	GND					15.0V	ALL INPUTS TOGETHER		-200.0					nA
I_{IL2}	3009	4								"		GND	GND					"	EACH INPUT		-100.0		-100.0			"
I_{IH1}	3010	5								"		15.0V	15.0V					"	ALL INPUTS TOGETHER		200.0					"
I_{IH2}	3010	6								"		15.0V	15.0V					"	EACH INPUT		100.0		100.0			"
V_{OH1} 1/ 2/	3006	7	I_{OH4}	I_{OH4}	I_{OH4}	I_{OH4}	I_{OH4}	I_{OH4}	I_{OH4}	"	I_{OH4}	IN	IN	I_{OH4}	I_{OH4}	I_{OH4}	I_{OH4}	5.0V	EACH OUTPUT	4.5						V
V_{OL1}	3007	8	I_{OL3}	I_{OL3}	I_{OL3}	I_{OL3}	I_{OL3}	I_{OL3}	I_{OL3}	"	I_{OL3}	"	"	I_{OL3}	I_{OL3}	I_{OL3}	I_{OL3}	5.0V	EACH OUTPUT		500 4.5		500 4.5		500	mV
V_{OH2}	3006	9	OUT	OUT	OUT	OUT	OUT	OUT	OUT	"	OUT	"	"	OUT	OUT	OUT	OUT	12.5V	EACH OUTPUT	11.25		11.25		11.25		V
V_{OL2}	3007	10	"	"	"	"	"	"	"	"	"	"	"	"	"	"	"	12.5V	EACH OUTPUT				1.25		1.25	"
V_{IL} 1/ 2/	Fig. 6	11	"	"	"	"	"	"	"	"	"	"	"	"	"	"	"	5.0V	CLOCK	1.10 1.25		0.85		1.35		"
V_{IH}	Fig. 6	12	"	"	"	"	"	"	"	"	"	"	"	"	"	"	"	"	CLOCK		3.80		3.60		3.95	"
V_{IL}	Fig. 5	13	"	"	"	"	"	"	"	"	"	"	"	"	"	"	"	"	RESET	1.10		0.85		1.35		"
V_{IH}	Fig. 5	14	"	"	"	"	"	"	"	"	"	"	"	"	"	"	"	"	RESET		3.80		3.60		3.95	"
I_{SS} 3/	3005	15								"	GND	GND	15.0V					15.0V	V_{SS}	-1.0	"	-10.0	"			µA
	"	16								"		PU	GND					"	V_{SS}		"		"			"
	"	17								"		GND	"					"	None		"		"			"
	"	18								"		PU	"					"	V_{SS}		"		"			"
	"	19								"		15.0V	"					"	None		"		"			"
	"	20								"			"					"	V_{SS}		"		"			"
																				Subgroup 4 T_C = 25°C						
																				Min	Max					
C_i 2/		21								GND		IN	IN					GND	EACH INPUT		12					pF

See footnotes at end of device type 05.

TABLE III. Group A inspection for device type 03 – Continued.

Symbol	MIL-STD-883 method	Cases E,F, N, Z	Terminal conditions 4/																Measured terminal	Limits						Unit
			1	2	3	4	5	6	7	8	9	10	11	12	13	14	15	16		Subgroup 7 T_C = 25°C		Subgroup 8 T_C = 125°C		Subgroup 8 T_C = -55°C		
		Test no.	Q12	Q13	Q14	Q6	Q5	Q7	Q4	V_{SS}	Q1	CLOCK	RESET	Q9	Q8	Q10	Q11	V_{DD}		Min	Max	Min	Max	Min	Max	
Truth table test 3/	3014	22	L	L	L	L	L	L	L	GND	L	GND	5.0V	L	L	L	L	5.0V	EACH OUTPUT							
	“	23	L	L	L	L	L	L	L	“	L	GND	GND	L	L	L	L	“								
	“	24	L	L	L	L	L	L	L	“	L	5.0V	“	L	L	L	L	“	“							
	“	25	L	L	L	L	L	L	L	“	H	GND	“	L	L	L	L	“	“							
	“	26	L	L	L	L	L	L	L	“	H	5.0V	“	L	L	L	L	“	“							
	“	27	L	L	L	L	L	L	L	“	L	GND	“	L	L	L	L	“	“							
	“	28	X	X	X	X	X	X	X	“	X	PE	“	X	X	X	X	“	“							
	“	29	L	L	L	L	L	L	L	“	H	5.0V	“	L	L	L	L	“	“							
	“	30	L	L	L	L	L	L	H	“	L	GND	“	L	L	L	L	“	“							
	“	31	X	X	X	X	X	X	X	“	X	PF	“	X	X	X	X	“	“							
	“	32	L	L	L	L	L	L	H	“	H	5.0V	“	L	L	L	L	“	“							
	“	33	L	L	L	L	H	L	L	“	L	GND	“	L	L	L	L	“	“							
	“	34	X	X	X	X	X	X	X	“	X	PG	“	X	X	X	X	“	“							
	“	35	L	L	L	L	H	L	H	“	H	5.0V	“	L	L	L	L	“	“							
	“	36	L	L	L	H	L	L	L	“	L	GND	“	L	L	L	L	“	“							
	“	37	X	X	X	X	X	X	X	“	X	PH	“	X	X	X	X	“	“							
	“	38	L	L	L	H	H	L	H	“	H	5.0V	“	L	L	L	L	“	“							
	“	39	L	L	L	L	L	H	L	“	L	GND	“	L	L	L	L	“	“							
	“	40	X	X	X	X	X	X	X	“	X	PJ	“	X	X	X	X	“	“							
	“	41	L	L	L	H	H	H	H	“	H	5.0V	“	L	L	L	L	“	“							
	“	42	L	L	L	L	L	L	L	“	L	GND	“	L	H	L	L	“	“							
	“	43	X	X	X	X	X	X	X	“	X	PL	“	X	X	X	X	“	“							
	“	44	L	L	L	H	H	H	H	“	H	5.0V	“	L	H	L	L	“	“							
	“	45	L	L	L	L	L	L	L	“	L	GND	“	H	L	L	L	“	“							
	“	46	X	X	X	X	X	X	X	“	X	PM	“	X	X	X	X	“	“							
	“	47	L	L	L	H	H	H	H	“	H	5.0V	“	H	H	L	L	“	“							
	“	48	L	L	L	L	L	L	L	“	L	GND	“	L	L	H	L	“	“							
	“	49	X	X	X	X	X	X	X	“	X	PN	“	X	X	X	X	“	“							
	“	50	L	L	L	H	H	H	H	“	H	5.0V	“	H	H	H	L	“	“							
	“	51	L	L	L	L	L	L	L	“	L	GND	“	L	L	L	H	“	“							
	“	52	X	X	X	X	X	X	X	“	X	PR	“	X	X	X	X	“	“							
	“	53	L	L	L	H	H	H	H	“	H	5.0V	“	H	H	H	H	“	“							
	“	54	H	L	L	L	L	L	L	“	L	GND	“	L	L	L	L	“	“							
	“	55	X	X	X	X	X	X	X	“	X	PS	“	X	X	X	X	“	“							
	“	56	H	L	L	H	H	H	H	“	H	5.0V	“	H	H	H	H	“	“							
	“	57	L	H	L	L	L	L	L	“	L	GND	“	L	L	L	L	“	“							
	“	58	X	X	X	X	X	X	X	“	X	PT	“	X	X	X	X	“	“							
	“	59	H	H	L	H	H	H	H	“	H	5.0V	“	H	H	H	H	“	“							
	“	60	L	L	H	L	L	L	L	“	L	GND	“	L	L	L	L	“	“							
	“	61	X	X	X	X	X	X	X	“	X	PV	“	X	X	X	X	“	“							
	“	62	H	H	H	H	H	H	H	“	H	5.0V	“	H	H	H	H	“	“							
	“	63	L	L	L	L	L	L	L	“	L	GND	“	L	L	L	L	“	“							
	“	64	X	X	X	X	X	X	X	“	X	PY	“	X	X	X	X	“	“							
	“	65	H	L	H	H	L	L	H	“	L	GND	“	L	H	H	L	“	“							
	“	66	L	L	L	L	L	L	L	“	L	GND	5.0V	L	L	L	L	“	“							
	“	67	L	L	L	L	L	L	L	“	L	GND	GND	L	L	L	L	“	“							
	“	68	X	X	X	X	X	X	X	“	X	PU	GND	X	X	X	X	“	“							
	“	69	L	H	L	L	H	H	L	“	H	GND	GND	H	L	L	H	“	“							
	“	70	L	L	L	L	L	L	L	“	L	GND	5.0V	L	L	L	L	“	“							
	“	71	L	L	L	L	L	L	L	“	L	GND	GND	L	L	L	L	“	“							

See footnotes at end of device type 05.

TABLE III. Group A inspection for device type 03 – Continued.

Symbol	MIL-STD-883 method	Cases E,F, N, Z	Terminal conditions 4/																Measured terminal	Limits						Unit
			1	2	3	4	5	6	7	8	9	10	11	12	13	14	15	16		Subgroup 9 T_C = 25°C		Subgroup 10 T_C = 125°C		Subgroup 11 T_C = -55°C		
		Test no.	Q12	Q13	Q14	Q6	Q5	Q7	Q4	V_{SS}	Q1	CLOCK	RESET	Q9	Q8	Q10	Q11	V_{DD}		Min	Max	Min	Max	Min	Max	
t_{PHL1} 1/ 2/	3003	72								GND	OUT	IN	GND					5.0V	CLOCK TO OUTPUT	.013	0.89	.018	1.34	.013	0.89	µs
	“	73							OUT	“		“	“					“		.052	3.50	.072	5.25	.052	3.50	“
	“	74					OUT			“		“	“					“	“	.065	4.45	.090	6.68	.065	4.45	“
	“	75				OUT				“		“	“					“	“	.078	5.35	.108	8.03	.078	5.35	“
	“	76						OUT		“		“	“					“	“	.091	6.20	.126	9.30	.091	6.20	“
	“	77								“		“	“		OUT			“	“	.104	7.10	.144	10.65	.104	7.10	“
	“	78								“		“	“	OUT				“	“	.117	8.10	.162	12.15	.117	8.10	“
	“	79								“		“	“			OUT		“	“	.130	8.90	.180	13.35	.130	8.90	“
	“	80								“		“	“				OUT	“	“	.143	9.90	.198	14.85	.143	9.90	“
	“	81	OUT							“		“	“					“	“	.156	10.70	.216	16.05	.156	10.70	“
	“	82		OUT						“		“	“					“	“	.169	11.60	.234	17.40	.169	11.60	“
	“	83			OUT					“		“	“					“	“	.182	12.50	.252	18.75	.182	12.50	“
t_{PLH1}	“	84								“	OUT	“	“					“	“	.013	0.89	.018	1.34	.013	0.89	“
	“	85							OUT	“		“	“					“	“	.052	3.50	.072	5.25	.052	3.50	“
	“	86					OUT			“		“	“					“	“	.065	4.45	.090	6.68	.065	4.45	“
	“	87				OUT				“		“	“					“	“	.078	5.35	.108	8.03	.078	5.35	“
	“	88						OUT		“		“	“					“	“	.091	6.20	.126	9.30	.091	6.20	“
	“	89								“		“	“		OUT			“	“	.104	7.10	.144	10.65	.104	7.10	“
	“	90								“		“	“	OUT				“	“	.117	8.10	.162	12.15	.117	8.10	“
	“	91								“		“	“			OUT		“	“	.130	8.90	.180	13.35	.130	8.90	“
	“	92								“		“	“				OUT	“	“	.143	9.90	.198	14.85	.143	9.90	“
	“	93	OUT							“		“	“					“	“	.156	10.70	.216	16.05	.156	10.70	“
	“	94		OUT						“		“	“					“	“	.169	11.60	.234	17.40	.169	11.60	“
	“	95			OUT					“		“	“					“	“	.182	12.50	.252	18.75	.182	12.50	“
t_{PHL2}	“	96	OUT	OUT	“	OUT	OUT	OUT	OUT	“	OUT	“	IN	OUT	OUT	OUT	OUT	“	RESET TO OUTPUT	.013	3.30	.018	4.95	.013	3.30	“
t_{THL}	3004	97	“	“	“	“	“	“	“	“	“	“	GND	“	“	“	“	“	OUTPUT	.010	1.15	.014	1.73	.010	1.15	“
t_{TLH}	3004	98	“	“	“	“	“	“	“	“	“	“	GND	“	“	“	“	“	OUTPUT	.010	1.15	.014	1.73	.010	1.15	“

See footnotes at end of device type 05.

TABLE III. Group A inspection for device type 04.

Symbol	MIL-STD-883 method	Cases E,F,N,Z	Terminal conditions 4/																Measured terminal	Limits						Unit
			1	2	3	4	5	6	7	8	9	10	11	12	13	14	15	16		Subgroup 1 T_C = 25°C		Subgroup 2 T_C = 125°C		Subgroup 3 T_C = -55°C		
		Test no.	1 OUT	0 OUT	2 OUT	5 OUT	6 OUT	NC	3 OUT	V_{SS}	NC	7 OUT	4 OUT	CARRY OUT	CLOCK ENABLE	CLOCK	RESET	V_{DD}		Min	Max	Min	Max	Min	Max	
V_{IC} (POS)		1													1 mA	1 mA	1 mA	GND	EACH INPUT		1.5					V
V_{IC} (NEG)		2								GND					-1 mA	-1 mA	-1 mA		EACH INPUT		-6.0					V
I_{IL1} 6/	3009	3								"					GND	GND	GND	15.0V	ALL INPUTS TOGETHER		-300					nA
I_{IL2}	3009	4								"					GND	GND	GND	"	EACH INPUT		-100		-100			"
I_{IH1}	3010	5								"						15.0V	15.0V	"	ALL INPUTS TOGETHER		300					"
I_{IH2}	3010	6								"				15.0V		15.0V	15.0V	"	EACH INPUT		100					"
V_{OH1} 1/ 2/	3006	7	I_{OH5}	OH5	OH5	OH5	OH5		I_{OH5}	"		I_{OH5}	OH5	OH3 15.0V	GND	IN	IN	5.0V	EACH INPUT	4.5		4.5 100		4.5		V
V_{OL1}	3007	8	I_{OL4}	I_{OL4}	I_{OL4}	I_{OL4}	I_{OL4}		OL4	"		I_{OL4}	I_{OL4}	I_{OL2}	"	"	"	5.0V	EACH OUTPUT		500				500	mV
V_{OH2}	3006	9	OUT	OUT	OUT	OUT	OUT		OUT	"		OUT	OUT	OUT	"	"	"	12.5V	EACH OUTPUT	11.25		11.25 300		11.25		V
V_{OL2}	3007	10	"	"	"	"	"		"	"		"	"	"	"	"	"	12.5V	EACH OUTPUT		1.25		1.25			"
V_{IL} 1/ 2/	Fig. 6	11	"	"	"	"	"		"	"		"	"	"	IN	"	"	5.0V	CLOCK ENABLE	1.10		0.85		1.35 1.25		"
V_{IH}	"	12	"	"	"	"	"		"	"		"	"	"	IN	"	"	"	CLOCK ENABLE		3.80		3.60			"
V_{IL}	"	13	"	"	"	"	"		"	"		"	"	"	GND	"	"	"	CLOCK	1.10		0.85		1.35 1.25		"
V_{IH}	"	14	"	"	"	"	"		"	"		"	"	"	"	"	"	"	CLOCK		3.80		3.60			"
V_{IL}	Fig. 5	15	"	"	"	"	"		"	"		"	"	"	"	"	"	"	RESET	1.10		0.85		1.35		"
V_{IH}	"	16	"	"	"	"	"		"	"		"	"	"	"	"	"	"	RESET		3.80		3.60	3.95	3.95	"
I_{SS} 3/	3005	17								"					"	GND	15.0V	15.0V	V_{SS}		-0.5					µA
	"	18								"					"	GND	GND	"	V_{SS}		"		"			"
	"	19								"					"	15.0V	"	"	None		"	-5.0	"			"
	"	20								"					"	GND	"	"	V_{SS}		"		"			"
	"	21								"					"	15.0V	"	"	None		"		"			"
	"	22								"					"	GND	"	"	V_{SS}		"		"			"
	"	23								"					"	15.0V	"	"	None		"		"			"
	"	24								"					"	GND	"	"	V_{SS}		"		"			"
	"	25								"					"	15.0V	"	"	V_{SS}		"		"			"
	"	26								"					"	GND	"	"	None		"		"			"
	"	27								"					"	15.0V	"	"	V_{SS}		"		"			"
	"	28								"					"	GND	"	"	None		"		"			"
	"	29								"					"	15.0V	"	"	V_{SS}		"		"			"
	"	30								"					"	GND	"	"	None		"		"			"
	"	31								"					"	15.0V	"	"	V_{SS}		"		"			"
	"	32								"					15.0V	15.0V	"	"	V_{SS}		"		"			"

See footnotes at end of device type 05.

TABLE III. Group A inspection for device type 04 – Continued.

Symbol	MIL-STD-883 method	Cases E,F,N, Z	Terminal conditions 4/																Measured terminal	Limits						Unit
			1	2	3	4	5	6	7	8	9	10	11	12	13	14	15	16		Subgroup 4 T_C = 25°C						
		Test no.	1 OUT	0 OUT	2 OUT	5 OUT	6 OUT	NC	3 OUT	V_{SS}	NC	7 OUT	4 OUT	CARRY OUT	CLOCK ENABLE	CLOCK	RESET	V_{DD}		Min	Max	Min	Max	Min	Max	
C_I 2/	3012	33								GND					IN	IN	IN	GND	EACH INPUT		12					pF
																				Subgroup 7 T_C = 25°C		Subgroup 8 T_C = 125°C		Subgroup 8 T_C = -55°C		
																				Min	Max	Min	Max	Min	Max	
Truth table test 3/	3014	34	L	H	L	L	L			GND			L	H	GND	5.0V	5.0V	5.0V	EACH							
	"	35	L	H	L	L	L		L	"		L	L	H	"	5.0V	GND	"	OUTPUT							
	"	36	H	L	L	L	L		L	"		L	L	H	"	PA	"	"	"							
	"	37	L	L	H	L	L	L	L	"		L	L	H	"	"	"	"	"							
	"	38	L	L	L	L	L		H	"	L	L	L	H	"	"	"	"	"							
	"	39	L	L	L	L	L		L	"		L	H	L	"	"	"	"	"							
	"	40	L	L	L	H	L		L	"		L	L	L	"	"	"	"	"							
	"	41	L	L	L	L	H		L	"		L	L	L	"	"	"	"	"							
	"	42	L	L	L	L	L		L	"		H	L	L	"	"	"	"	"							
	"	43	L	H	L	L	L		L	"		L	L	H	"	"	"	"	"							
	"	44	H	L	L	L	L		L	"		L	L	H	"	"	"	"	"							
	"	45	H	L	L	L	L		L	"		L	L	H	5.0V	5.0V	"	"	"							
	"	46	H	L	L	L	L		L	"		L	L	H	5.0V	GND	"	"	"							
	"	47	H	L	L	L	L		L	"		L	L	H	5.0V	5.0V	"	"	"							
	"	48	L	L	H	L	L		L	"		L	L	H	GND	5.0V	"	"	"							
	"	49	X	X	X	X	X		X	"		X	X	X	"	PB	"	"	"							
	"	50	L	L	L	L	L		L	"		L	H	L	"	5.0V	"	"	"							
	"	51	L	L	L	L	L		L	"		L	H	L	"	GND	"	"	"							
	"	52	L	H	L	L	L		L	"		L	L	H	"	GND	5.0V	"	"							
	"	53	L	H	L	L	L		L	"		L	L	H	"	GND	GND	"	"							
	"	54	H	L	L	L	L		L	"		L	L	H	"	5.0V	"	"	"							
	"	55	X	X	X	X	X		X	"		X	X	X	"	PC	"	"	"							
	"	56	L	L	L	L	L		L	"		L	H	L	"	5.0V	"	"	"							
	"	57	L	H	L	L	L		L	"		L	L	H	"	5.0V	5.0V	"	"							
	"	58	L	H	L	L	L		L	"		L	L	H	"	5.0V	GND	"	"							
																				Subgroup 9 T_C = 25°C		Subgroup 10 T_C = 125°C		Subgroup 11 T_C = -55°C		
																				Min	Max	Min	Max	Min	Max	
t_{PHL1} 1/ 2/	3003	59								GND				OUT	GND	IN	GND	5.0V	CLOCK TO	.013	1.20	.018	1.80	.013	1.20	µs
t_{PHL1}	"	60	OUT	OUT	OUT	OUT	OUT		OUT	"		OUT	OUT		"	"	"	"	OUTPUT	"	2.25	"	3.38	"	2.25	"
t_{PLH1}	"	61								"				OUT	"	"	GND	"	CLOCK TO	"	1.20	"	1.80	"	1.20	"
t_{PLH1}	"	62	OUT	OUT	OUT	OUT	OUT		OUT	"		OUT	OUT		"	"	"	"	OUTPUT	"	2.25	"	3.38	"	2.25	"
t_{PLH2}	"	63								"					"	"	IN	"	RESET TO	"	2.25	"	3.38	"	2.25	"
t_{PLH2}	"	64								"				OUT	"	"	"	"	OUTPUT	"	1.20	"	1.80	"	1.20	"
t_{PHL2}	"	65	OUT	OUT	OUT	OUT	OUT		OUT	"		OUT	OUT		"	"	IN	"	RESET TO OUTPUT	"	2.25	"	3.38	"	2.25	" "
t_{THL}	3004	66								"				OUT	"	"	GND	"	OUTPUT	10	500	14	750	10	500	ns
t_{THL}	"	67	OUT	OUT	OUT	OUT	OUT		OUT	"		OUT	OUT		"	"	"	"	OUTPUT	"	500	"	750	"	500	ns
t_{TLH}	"	68								"				OUT	"	"	GND	"	OUTPUT	"	600	"	900	"	600	ns
t_{TLH}	"	69	OUT	OUT	OUT	OUT	OUT		OUT	"		OUT	OUT		"	"	"	"	OUTPUT	"	600	"	900	"	600	ns
t_{SHL1} 2/	"	70								"				OUT	IN	"	"	"	CLOCK ENABLE TO CLOCK		500					ns
t_{SHL1}	"	71	OUT	OUT	OUT	OUT	OUT		OUT	"		OUT	OUT		IN	"	"	"	CLOCK ENABLE TO CLOCK		750	750	1125	500	750	ns
t_{SHL2}	"	72	OUT	OUT						"					GND	"	IN	"	RESET TO CLOCK				1125		750	ns

See footnotes at end of device type 05.

TABLE III. Group A inspection for device type 05.

Symbol	MIL-STD-883 method	Cases A,B,C,D T,X,Y	Terminal conditions 4/														Measured terminal	Limits						Unit
			1	2	3	4	5	6	7	8	9	10	11	12	13	14		Subgroup 1 T_C = 25°C		Subgroup 2 T_C = 125°C		Subgroup 3 T_C = -55°C		
		Test no.	CLOCK	RESET	Q7	Q6	Q5	Q4	V_{SS}	NC	Q3	NC	Q2	Q1	NC	V_{DD}		Min	Max	Min	Max	Min	Max	
V_{IC} (POS)		1	1 mA	1 mA												GND	EACH INPUT		1.5					V
V_{IC} (NEG)		2	-1 mA	-1 mA					GND								EACH INPUT		-6.0					V
I_{IL} 6/	3009	3	GND	GND					"							15.0V	CLOCK				-100.0			nA
I_{IL}	3009	4	GND	GND					"							"	RESET		-100.0		-100.0			"
I_{IH}	3010	5	15.0V	GND					"							"	CLOCK	-100.0			100.0			"
I_{IH}	3010	6	GND	15.0V					"							"	RESET		100.0		100.0			"
V_{OH1} 2/	3006	7	IN	IN	I_{OH2}	I_{OH2}	I_{OH2}	I_{OH2}	"		I_{OH2}		OH2	I_{OH2}		5.0V	EACH OUTPUT	4.5 500.0						V
V_{OL1}	3007	8	"	"	I_{OL5}	I_{OL5}	I_{OL5}	I_{OL5}	"		I_{OL5}	I	OL5	I_{OL5}			EACH OUTPUT		4.5		500 4.5		500	mV
V_{OH2}	3006	9	"	"	OUT	OUT	OUT	OUT	"		OUT	I	OUT	OUT	5.0V	12.5V	EACH OUTPUT	11.25 500						V
V_{OL2}	3007	10	"	"	"	"	"	"	"		"		"	"		12.5V	EACH OUTPUT		1.25 1.25		1.25 1.25		1.25	"
V_{IL} 1/ 2/	Fig. 6	11	"	"	"	"	"	"	"		"		"	"		5.0V	CLOCK	1.10				1.35		"
V_{IH}	Fig. 6	12	"	"	"	"	"	"	"		"		"	"		"	CLOCK		3.80		3.60		3.95	"
V_{IL}	Fig. 5	13	"	"	"	"	"	"	"		"		"	"		"	RESET	1.10	0.85			1.35		"
V_{IH}	Fig. 5	14	"	"	"	"	"	"	"		"		"	"		"	RESET		3.80		3.60		3.95	"
I_{SS} 3/	3005	15	GND	15.0V					"							15.0V	V_{SS}		-0.5 0.85					µA
	"	16	GND	GND					"							"	V_{SS}		"		"			"
	"	17	PI	"					"							"	None		"	-5.0	"			"
	"	18	15.0V	"					"							"	V_{SS}		"		"			"
	"	19	GND	"					"							"	None		"		"			"
	"	20	PI	"					"							"	None		"		"			"
	"	21	GND	"					"							"	V_{SS}		"		"			"
																		Subgroup 4 T_C = 25°C						
																		Min	Max					
C_i 2/	3012	22	IN	IN					GND							GND	EACH INPUT		12					pF

See footnotes at end of device type 05.

TABLE III. Group A inspection for device type 05 – Continued.

Symbol	MIL-STD-883 method	Cases A,B,C,D T,X,Y	Terminal conditions 4/														Measured terminal	Limits						Unit
			1	2	3	4	5	6	7	8	9	10	11	12	13	14		Subgroup 7 T_C = 25°C		Subgroup 8 T_C = 125°C		Subgroup 8 T_C = -55°C		
		Test no.	CLOCK	RESET	Q7	Q6	Q5	Q4	V_{SS}	NC	Q3	NC	Q2	Q1	NC	V_{DD}		Min	Max	Min	Max	Min	Max	
Truth table test 3/	3014	23	GND	5.0V	L	L	L	L	GND					L			Each output							
	“	24	GND	GND	L	L	L	L	“		L		L	L		“								
	“	25	5.0V	“	L	L	L	L	“		L		L	L	5.0V	“								
	“	26	GND	“	L	L	L	L	“	L	L	L	L	H		“								
	“	27	5.0V	“	L	L	L	L	“		L		L	H		“								
	“	28	GND	“	L	L	L	L	“		L		H	L		“								
	“	29	5.0V	“	L	L	L	L	“		L		H	L		“								
	“	30	GND	“	L	L	L	L	“		L		H	H		“								
	“	31	5.0V	“	L	L	L	L	“		L		H	H		“								
	“	32	GND	“	L	L	L	L	“		H		L	L		“								
	“	33	PC	“	X	X	X	X	“		X		X	X		“								
	“	34	5.0V	“	L	L	L	L	“		H		H	H		“								
	“	35	GND	“	L	L	L	H	“		L		L	L		“								
	“	36	PF	“	X	X	X	X	“		X		X	X		“								
	“	37	5.0V	“	L	L	L	H	“		H		H	H		“								
	“	38	GND	“	L	L	H	L	“		L		L	L		“								
	“	39	PG	“	X	X	X	X	“		X		X	X		“								
	“	40	5.0V	“	L	L	H	H	“		H		H	H		“								
	“	41	GND	“	L	H	L	L	“		L		L	L		“								
	“	42	PH	“	X	X	X	X	“		X		X	X		“								
	“	43	5.0V	“	L	H	H	H	“		H		H	H		“								
	“	44	GND	“	H	L	L	L	“		L		L	L		“								
	“	45	PJ	“	X	X	X	X	“		X		X	X		“								
	“	46	5.0V	“	H	H	H	H	“		H		H	H		“								
	“	47	GND	“	L	L	L	L	“		L		L	L		“								
	“	48	PI	“	X	X	X	X	“		X		X	X		“								
	“	49	GND	“	L	H	L	H	“		L		H	L		“								
	“	50	GND	5.0V	L	L	L	L	“		L		L	L		“								
	“	51	GND	GND	L	L	L	L	“		L		L	L		“								
	“	52	PK	GND	X	X	X	X	“		X		X	X		“								
	“	53	GND	GND	H	L	H	L	“		H		L	H		“								
	“	54	GND	5.0V	L	L	L	L	“		L		L	L		“								
	“	55	GND	GND	L	L	L	L	“		L		L	L		“								
																		Subgroup 9 T_C = 25°C		Subgroup 10 T_C = 125°C		Subgroup 11 T_C = -55°C		
																		Min	Max	Min	Max	Min	Max	
t_{PHL1} 1/ 2/	3003	56	IN	GND					GND					OUT		5.0V	CLOCK TO OUTPUT	.013	0.44	.018	0.66	.013	0.44	µs
	“	57	“	“					“				OUT			“		.026	0.88	.036	1.32	.026	0.88	“
	“	58	“	“					“		OUT					“	“	.039	1.32	.054	1.98	.039	1.32	“
	“	59	“	“				OUT	“							“	“	.052	1.76	.072	2.64	.052	1.76	“
	“	60	“	“			OUT		“							“	“	.065	2.20	.090	3.30	.065	2.20	“
	“	61	“	“		OUT			“							“	“	.078	2.64	.108	3.96	.078	2.64	“
	“	62	“	“	OUT				“							“		.091	3.10	.126	4.65	.091	3.10	“
t_{PLH1}	“	63	“	“					“					OUT		“	“	.013	0.44	.018	0.66	.013	0.44	“
	“	64	“	“					“				OUT			“	“	.026	0.88	.036	1.32	.026	0.88	“
	“	65	“	“					“		OUT					“	“	.039	1.32	.054	1.98	.039	1.32	“
	“	66	“	“				OUT	“							“	“	.052	1.76	.072	2.64	.052	1.76	“
	“	67	“	“			OUT		“							“	“	.065	2.20	.090	3.30	.065	2.20	“
	“	68	“	“		OUT			“							“	“	.078	2.64	.108	3.96	.078	2.64	“
	“	69	“	“	OUT				“							“	“	.091	3.10	.126	4.65	.091	3.10	“
t_{PHL2}	“	70	“	IN	OUT	OUT	OUT	OUT	“		OUT		OUT	OUT		“	RESET TO OUTPUT	.013	1.50	.018	2.25	.013	1.50	µs
t_{THL}	3004	71	“	GND	“	“	“	“	“		“		“	“		“	OUTPUT	10	430	14	645	10	430	ns
t_{TLH}	3004	72	“	GND	“	“	“	“	“		“		“	“		“	OUTPUT	10	700	14	1050	10	700	ns

See footnotes on next page.

1/ Unless otherwise specified, separately monitor or measure as required, each device terminal designated “OUT”, “I_{OH}”, and “I_{OL}” in the terminal condition columns of table III. Values for “I_{OH}” and “I_{OL}” are specified in footnote 5.

2/ Terminals designated “IN” indicate conditions and test methods are specified in footnote 5 and figures 4 through 8 or for “C_i” measurement, 4.4.1c.

3/ This I_{SS} and functional tests shall be performed in the test number sequence shown with no intervening changes to terminal conditions. The functional test shall be performed with V_{IH} and $V_{DD} \leq 5.0$ V and ≥ 15.0 V. Table III shows the lower of these two voltages. During the functional test, input terminals designated “PA”, “PB”, etc., shall have applied thereto a specified number of single pulses with the following parameters: Pulse amplitude = V_{DD} maximum to V_{DD} = 4% minimum. These pulses are enumerated as follows:

Symbol	Pulses	Symbol	Pulses	Symbol	Pulses	Symbol	Pulses
PA	1	PF	7	PK	85	PS	2047
PB	2	PG	15	PL	127	PT	4095
PC	3	PH	31	PM	255	PU	5461
PD	4	PI	42	PN	511	PV	8191
PE	5	PJ	63	PR	1023	PY	10922

During the functional tests, device output voltages are: don’t care “X”, high “H”, or low “L” as specified in the terminal conditions columns. The output voltage limits over the specified temperature range are “H” = V_{DD} –0.50 V minimum and “L” = V_{SS} +0.50 V maximum.

4/ Undesignated terminal conditions indicate terminal may be high-level logic, low-level logic, or open except as follows: $_{IC(POS)}$ tests, the V_{SS} terminals shall be open; $V_{IC(NEG)}$ tests, the V_{DD} terminals shall be open; I_{SS} tests, the output terminals shall be open.

5/ The following input voltages and output currents are terminal conditions for group A inspection:

Temperature	Symbol													
	V_{IH1} Max (V)	V_{IL1} Min (V)	V_{IH2} Max (V)	V_{IL2} Min (V)	I_{OH1} (μA)	I_{OH2} (μA)	I_{OH3} (μA)	I_{OH4} (μA)	I_{OH5} (μA)	I_{OL1} (μA)	I_{OL2} (μA)	I_{OL3} (μA)	I_{OL4} (μA)	I_{OL5} (μA)
25°C	3.80	1.10	9.50	2.80	-30	-150	-60	-90	-30	50	150	100	50	250
125°C	3.60	0.85	9.25	2.55	-21	-105	-40	-65	-21	35	105	90	35	175
-55°C	3.95	1.35	9.75	3.05	-38.0	-185	-75	-110	-38	60	185	125	60	310

6/ The device manufacturer may, at his option, measure I_{IL} and I_{IH} at 25°C for each individual input or measure all inputs together.

7/ Data pin need only be toggled high or low to allow outputs to achieve the proper setup state required to verify the indicated test parameter.

TABLE III. Group A inspection for device type 51.

Symbol	MIL-STD-883 method	Cases E,F, N, Z	Terminal conditions 1/																Measured terminal	Limits						Unit
			1	2	3	4	5	6	7	8	9	10	11	12	13	14	15	16		Subgroup 1 T_C = 25°C		Subgroup 2 T_C = 125°C		Subgroup 3 T_C = -55°C		
		Test no.	5 OUT	1 OUT	0 OUT	2 OUT	6 OUT	7 OUT	3 OUT	V_{SS}	8 OUT	4 OUT	9 OUT	CARRY OUT	CLOCK ENABLE	CLOCK	RESET	V_{DD}		Min	Max	Min	Max	Min	Max	
V_{IC} (POS)		1													1 mA	1 mA	1 mA	GND	EACH INPUT		1.5					V
V_{IC} (NEG)		2								GND					-1 mA	-1 mA	-1 mA		EACH INPUT		-6.0					V
I_{IL1} 2/	3009	3								"					GND	GND	GND	18.0 V	ALL INPUTS TOGETHER		-300.0					nA
I_{IL2}	3009	4								"					GND	GND	GND	"	EACH INPUT		-100.0		-100.0			"
I_{IH1}	3010	5								"					18.0 V	18.0 V	18.0 V	"	ALL INPUTS TOGETHER		300.0					"
I_{IH2}	3010	6								"					18.0 V	18.0 V	18.0 V	"	EACH INPUT		100.0		100.0			"
I_{OL}		7	4/	4/	4/	4/	4/	4/	4/	"	4/	4/	4/	4/	4/	4/	4/	4/	EACH INPUT	4/	4/	4/	4/	4/	4/	mA
I_{OH}		8	"	"	"	"	"	"	"	"	"	"	"	"	"	"	"	"	"	"	"	"	"	"	"	mA
V_{OL}	3007	9	"	"	"	"	"	"	"	"	"	"	"	"	"	"	"	"	"	"	"	"	"	"	"	V
V_{OH}	3006	10	"	"	"	"	"	"	"	"	"	"	"	"	"	"	"	"	"	"	"	"	"	"	"	"
V_{IL}		11	"	"	"	"	"	"	"	"	"	"	"	"	"	"	"	"	EACH INPUT	"	"	"	"	"	"	"
V_{IH}		12	"	"	"	"	"	"	"	"	"	"	"	"	"	"	"	"	EACH INPUT	"	"	"	"	"	"	"
I_{SS} 5/	3005	13								"					GND	GND	18.0 V	18.0V	V_{SS}		-0.5					µA
	"	14								"					"	GND	GND	"	V_{SS}		"		"			"
	"	15								"					"	18.0V	"	"	None		"	-5.0	"			"
	"	16								"					"	GND	"	"	V_{SS}		"		"			"
	"	17								"					"	18.0V	"	"	None		"		"			"
	"	18								"					"	GND	"	"	V_{SS}		"		"			"
	"	19								"					"	18.0V	"	"	None		"		"			"
	"	20								"					"	GND	"	"	V_{SS}		"		"			"
	"	21								"					"	18.0V	"	"	None		"		"			"
	"	22								"					"	GND	"	"	V_{SS}		"		"			"
	"	23								"					"	18.0V	"	"	V_{SS}		"		"			"
	"	24								"					"	GND	"	"	None		"		"			"
	"	25								"					"	18.0V	"	"	V_{SS}		"		"			"
	"	26								"					"	GND	"	"	None		"		"			"
	"	27								"					"	18.0V	"	"	V_{SS}		"		"			"
	"	28								"					"	GND	"	"	None		"		"			"
	"	29								"					"	18.0V	"	"	V_{SS}		"		"			"
	"	30								"					"	GND	"	"	None		"		"			"
	"	31								"					"	18.0V	"	"	V_{SS}		"		"			"
	"	32								"					18.0V	18.0V	"	"	V_{SS}		"		"			"

See footnotes at end of device type 55.

TABLE III. Group A inspection for device type 51 – Continued.

Symbol	MIL-STD-883 method	Cases E,F,N, Z	Terminal conditions 1/																Measured terminal	Limits						Unit
			1	2	3	4	5	6	7	8	9	10	11	12	13	14	15	16		Subgroup 4 T_C = 25°C						
		Test no.	5 OUT	1 OUT	0 OUT	2 OUT	6 OUT	7 OUT	3 OUT	V_{SS}	8 OUT	4 OUT	9 OUT	CARRY OUT	CLOCK ENABLE	CLOCK	RESET	V_{DD}		Min	Max	Min	Max	Min	Max	
C_I 3/	3012	33								GND					IN	IN	IN	GND	EACH INPUT		12.0					pF
																				Subgroup 7 T_C = 25°C		Subgroup 8 T_C = 125°C		Subgroup 8 T_C = -55°C		
																				Min	Max	Min	Max	Min	Max	
Truth table test 5/	3014	34	L	L	H	L	L	L	L	GND	L	L	L	H	GND	5.0 V	5.0 V	5.0 V	EACH OUTPUT							
	"	35	L	L	H	L	L	L	L	"	L	L	L	H	"	5.0 V	GND	5.0 V								
	"	36	L	H	L	L	L	L	L	"	L	L	L	H	"	PA	"	"	"							
	"	37	L	L	L	H	L	L	L	"	L	L	L	H	"	"	"	"	"							
	"	38	L	L	L	L	L	L	H	"	L	L	L	H	"	"	"	"	"							
	"	39	L	L	L	L	L	L	L	"	L	H	L	H	"	"	"	"	"							
	"	40	H	L	L	L	L	L	L	"	L	L	L	L	"	"	"	"	"							
	"	41	L	L	L	L	H	L	L	"	L	L	L	L	"	"	"	"	"							
	"	42	L	L	L	L	L	H	L	"	L	L	L	L	"	"	"	"	"							
	"	43	L	L	L	L	L	L	L	"	H	L	L	L	"	"	"	"	"							
	"	44	L	L	L	L	L	L	L	"	L	L	H	L	"	"	"	"	"							
	"	45	L	L	H	L	L	L	L	"	L	L	L	H	"	"	"	"	"							
	"	46	L	H	L	L	L	L	L	"	L	L	L	H	"	"	"	"	"							
	"	47	L	H	L	L	L	L	L	"	L	L	L	H	5.0 V	5.0 V	"	"	"							
	"	48	L	H	L	L	L	L	L	"	L	L	L	H	5.0 V	PA	"	"	"							
	"	49	L	L	L	H	L	L	L	"	L	L	L	H	GND	5.0 V	"	"	"							
	"	50	X	X	X	X	X	X	X	"	X	X	X	X	"	PC	"	"	"							
	"	51	H	L	L	L	L	L	L	"	L	L	L	L	"	5.0 V	"	"	"							
	"	52	H	L	L	L	L	L	L	"	L	L	L	L	"	GND	"	"	"							
	"	53	L	L	H	L	L	L	L	"	L	L	L	H	"	GND	5.0 V	"	"							
	"	54	L	L	H	L	L	L	L	"	L	L	L	H	"	GND	GND	"	"							
	"	55	L	H	L	L	L	L	L	"	L	L	L	H	"	5.0 V	"	"	"							
	"	56	X	X	X	X	X	X	X	"	X	X	X	X	"	PD	"	"	"							
	"	57	H	L	L	L	L	L	L	"	L	L	L	L	"	5.0 V	"	"	"							
	"	58	L	L	H	L	L	L	L	"	L	L	L	H	"	5.0 V	5.0 V	"	"							
	"	59	L	L	H	L	L	L	L	"	L	L	L	H	"	5.0 V	GND	"	"							
																				Subgroup 9 T_C = 25°C		Subgroup 10 T_C = 125°C		Subgroup 11 T_C = -55°C		
																				Min	Max	Min	Max	Min	Max	
t_{PHL1} 6/	3003	60								GND				OUT	GND	IN	GND	5.0 V	CLOCK TO	.013	0.80	.018	1.12	.013	0.80	µs
t_{PHL1}	"	61	OUT	OUT	OUT	OUT	OUT	OUT	OUT	"	OUT	OUT	OUT		"	"	"	"	OUTPUT	"	1.0	"	1.40	"	1.0	"
t_{PLH1}	"	62								"				OUT	"	"	"	"	CLOCK TO	"	0.80	"	1.12	"	0.80	"
t_{PLH1}	"	63	OUT	OUT	OUT	OUT	OUT	OUT	OUT	"	OUT	OUT	OUT		"	"	"	"	OUTPUT	"	1.0	"	1.40	"	1.0	"
t_{PLH2}	"	64								"					"	"	IN	"	RESET TO	"	1.0	"	1.40	"	1.0	"
t_{PLH2}	"	65								"				OUT	"	"	"	"	OUTPUT	"	0.80	"	1.12	"	0.80	"
t_{PHL2}	"	66	OUT	OUT	OUT	OUT	OUT	OUT	OUT	"	OUT	OUT	OUT		"	"	"	"	RESET TO OUTPUT	"	1.0	"	1.40	"	1.0	"
t_{THL}	3004	67								"				OUT	"	"	GND	"	OUTPUT	10	200	14	280	10	200	ns
t_{THL}	"	68	OUT	OUT	OUT	OUT	OUT	OUT	OUT	"	OUT	OUT	OUT		"	"	"	"	OUTPUT	10	200	14	280	10	200	"
t_{TLH}	3004	69								"				OUT	"	"	"	"	OUTPUT	10	360	14	504	10	360	"
t_{TLH}	"	70	OUT	OUT	OUT	OUT	OUT	OUT	OUT	"	OUT	OUT	OUT		"	"	"	"	OUTPUT	10	360	14	504	10	360	"
t_{SHL1}	See Fig. 8 6/	71								"				OUT	IN	"	"	"	CLOCK ENABLE TO CLOCK	240	240	336	336	240	240	"
t_{SHL1}		72	OUT	OUT	OUT	OUT	OUT	OUT	OUT	"	OUT	OUT	OUT		IN	"	"	"	CLOCK ENABLE TO CLOCK							
t_{SHL2}		73								"					GND	"	IN	"	RESET TO CLOCK				560		400	"

See footnotes at end of device type 55.

TABLE III. Group A inspection for device type 52.

Symbol	MIL-STD-883 method	Cases E,F, N, Z	Terminal conditions 1/																Measured terminal	Limits						Unit
			1	2	3	4	5	6	7	8	9	10	11	12	13	14	15	16		Subgroup 1 T_C = 25°C		Subgroup 2 T_C = 125°C		Subgroup 3 T_C = -55°C		
		Test no.	DATA	JAM 1	JAM 2	Q2	Q1	Q3	JAM 3	V_{SS}	JAM 4	PRESET ENABLE	Q4	JAM 5	Q5	CLOCK	RESET	V_{DD}		Min	Max	Min	Max	Min	Max	
V_{IC} (POS)		1	1mA	1mA	1mA				1mA		1mA	1mA		1mA		1mA	1mA	GND	EACH INPUT		1.5					V
V_{IC} (NEG)		2	-1mA	-1mA	-1mA				-1mA	GND	-1mA	-1mA		-1mA		-1mA	-1mA		EACH INPUT		-6.0					V
I_{IL1} 2/	3009	3	GND	GND	GND				GND	"	GND	GND		GND		GND	GND	18.0V	ALL INPUTS TOGETHER		-900.0					nA
I_{IL2}	3009	4	GND	GND	GND				GND	"	GND	GND		GND		GND	"	18.0V	EACH INPUT		-100.0		-100.0			"
I_{IH1}	3010	5	18.0V	18.0V	18.0V				18.0V	"	18.0V	18.0V		18.0V		18.0V	18.0V	"	ALL INPUTS TOGETHER		900.0					"
I_{IH2}	3010	6	18.0V	18.0V	18.0V				18.0V	"	18.0V	18.0V		18.0V		18.0V	18.0V	"	EACH INPUT		100.0		100.0			"
I_{OL}		7	4/	4/	4/	4/	4/	4/	4/	"	4/	4/	4/	4/	4/	4/	4/	4/	EACH OUTPUT	4/	4/	4/	4/	4/	4/	mA
I_{OH}		8	"	"	"	"	"	"	"	"	"	"	"	"	"	"	"	"	"	"	"	"	"	"	"	"
V_{OL}	3007	9	"	"	"	"	"	"	"	"	"	"	"	"	"	"	"	"	"	"	"	"	"	"	"	V
V_{OH}	3006	10	"	"	"	"	"	"	"	"	"	"	"	"	"	"	"	"	"	"	"	"	"	"	"	"
V_{IL}		11	"	"	"	"	"	"	"	"	"	"	"	"	"	"	"	"	EACH INPUT	"	"	"	"	"	"	"
V_{IH}		12	"	"	"	"	"	"	"	"	"	"	"	"	"	"	"	"	EACH INPUT	"	"	"	"	"	"	"
I_{SS} 5/	3005	13	GND	18.0V	18.0V				18.0V	"	18.0V	18.0V					18.0V	18.0V	V_{SS}							µA
	"	14	"	"	18.0V				GND	"	GND	"		"			GND	"	V_{SS}		"		"			"
	"	15	"	"	GND				18.0V	"	"	"	18.0V	"	GND	GND	"	"	V_{SS}	-0.5	"	-5.0	"			"
	"	16	"	"	GND				18.0V	"	"	"		"		18.0V	"	"	None		"		"			"
	"	17	"	"	GND				18.0V	"	"	GND		"		18.0V	"	"	V_{SS}		"		"			"
	"	18	18.0V	GND	18.0V				GND	"	18.0V	18.0V		GND		GND	"	"	V_{SS}		"		"			"
	"	19	"	"	"				GND	"	"	18.0V		"		18.0V	"	"	None		"		"			"
	"	20	"	"	"				GND	"	"	GND		"		18.0V	"	"	V_{SS}		"		"			"
	"	21	"	"	"				18.0V	"	"	18.0V		"		18.0V	"	"	V_{SS}		"		"			"

See footnotes at end of device type 55.

TABLE III. Group A inspection for device type 52 – Continued.

Symbol	MIL-STD-883 method	Cases E,F,N, Z	Terminal conditions 1/																Measured terminal	Limits						Unit
			1	2	3	4	5	6	7	8	9	10	11	12	13	14	15	16		Subgroup 4 T_C = 25°C						
		Test no.	DATA	JAM 1	JAM 2	Q2	Q1	Q3	JAM 3	V_{SS}	JAM 4	PRESET ENABLE	Q4	JAM 5	Q5	CLOCK	RESET	V_{DD}		Min	Max	Min	Max	Min	Max	
C_i 3/	3012	22	IN	IN	IN				IN	GND	IN	IN		IN		IN	IN	GND	EACH INPUT		12.0					pF
																				Subgroup 7 T_C = 25°C		Subgroup 8 T_C = 125°C		Subgroup 8 T_C = -55°C		
																				Min	Max	Min	Max	Min	Max	
Truth table test 5/	3014	23	5.0V	5.0V	5.0V	L	L	L	5.0V	GND	5.0V	5.0V	L	5.0V	L	5.0V	GND	5.0V	EACH OUTPUT							
	"	24	5.0V	5.0V	5.0V	H	H	H	5.0V	"	5.0V	5.0V	H	5.0V	H	"	5.0V	"								
	"	25	5.0V	GND	GND	H	H	H	GND	"	GND	GND	H	GND	H	"	5.0V	"	"							
	"	26	GND	GND	"	H	H	H	GND	"	"	GND	H	GND	H	"	GND	"	"							
	"	27	5.0V	5.0V	"	H	H	H	5.0V	"	"	GND	H	5.0V	H	"	"	"	"							
	"	28	"	5.0V	"	H	L	L	5.0V	"	"	5.0V	H	5.0V	L	"	"	"	"							
	"	29	"	5.0V	"	H	L	L	5.0V	"	"	GND	H	5.0V	L	"	"	"	"							
	"	30	"	GND	"	H	L	L	GND	"	"	"	H	GND	L	GND	"	"	"							
	"	31	"	"	"	L	L	H	"	"	"	"	L	"	H	5.0V	"	"	"							
	"	32	GND	"	"	L	L	H	"	"	"	"	L	"	H	5.0V	"	"	"							
	"	33	GND	"	"	L	L	H	"	"	"	"	L	"	H	GND	"	"	"							
	"	34	GND	"	"	L	H	L	"	"	"	"	H	"	L	5.0V	"	"	"							
	"	35	5.0V	"	"	L	H	L	"	"	"	"	H	"	L	5.0V	"	"	"							
	"	36	"	"	"	L	H	L	"	"	"	"	H	"	L	GND	"	"	"							
	"	37	"	"	"	H	L	L	"	"	"	"	L	"	H	5.0V	"	"	"							
	"	38	"	"	"	H	H	H	"	"	"	"	H	"	H	5.0V	5.0V	"	"							
	"	39	"	"	"	H	H	H	"	"	"	"	H	"	H	5.0V	GND	"	"							
	"	40	"	5.0V	5.0V	H	H	H	"	"	5.0V	"	H	"	H	GND	"	"	"							
	"	41	"	5.0V	5.0V	L	L	H	"	"	5.0V	5.0V	L	"	H	"	"	"	"							
	"	42	"	5.0V	5.0V	L	L	H	"	"	5.0V	GND	L	"	H	"	"	"	"							
	"	43	"	GND	GND	L	L	H	5.0V	"	GND	GND	L	5.0V	H	"	"	"	"							
	"	44	"	"	"	H	H	L	"	"	"	5.0V	H	"	L	"	"	"	"							
	"	45	"	"	"	H	H	L	"	"	"	GND	H	"	L	"	"	"	"							
	"	46	"	"	"	H	H	L	"	"	"	5.0V	H	"	L	"	"	"	"							
	"	47	"	"	"	H	H	L	"	"	"	5.0V	H	"	L	5.0V	"	"	"							
	"	48	"	"	"	H	H	L	"	"	"	GND	H	"	L	5.0V	"	"	"							
	"	49	GND	5.0V	5.0V	H	H	L	GND	"	5.0V	GND	H	GND	L	GND	"	"	"							
	"	50	"	"	"	L	L	H	"	"	"	5.0V	L	"	H	"	"	"	"							
	"	51	"	"	"	L	L	H	"	"	"	GND	L	"	H	"	"	"	"							
	"	52	"	"	"	L	L	H	"	"	"	5.0V	L	"	H	"	"	"	"							
	"	53	"	"	"	L	L	H	"	"	"	5.0V	L	"	H	5.0V	"	"	"							
	"	54	"	"	"	L	L	H	"	"	"	GND	L	"	H	5.0V	"	"	"							
	"	55	5.0V	GND	"	L	H	H	"	"	"	5.0V	L	"	H	GND	"	"	"							
	"	56	"	GND	"	L	H	H	"	"	"	GND	L	"	H	GND	"	"	"							
	"	57	"	GND	"	H	L	H	"	"	"	GND	H	"	L	5.0V	"	"	"							
	"	58	"	5.0V	GND	H	L	H	"	"	"	5.0V	L	"	H	GND	"	"	"							
	"	59	"	5.0V	GND	H	L	H	"	"	"	5.0V	L	"	H	5.0V	"	"	"							
	"	60	"	5.0V	GND	H	L	H	"	"	"	GND	L	"	H	5.0V	"	"	"							
	"	61	GND	"	"	H	H	H	"	"	"	"	H	"	H	5.0V	5.0V	"	"							
	"	62	"	"	"	H	H	H	"	"	"	"	H	"	H	GND	"	"	"							
	"	63	"	"	"	H	H	H	"	"	"	"	H	"	H	5.0V	"	"	"							
	"	64	"	"	"	H	H	H	"	"	"	"	H	"	H	GND	"	"	"							
	"	65	"	"	"	H	H	H	"	"	"	"	H	"	H	5.0V	"	"	"							

See footnotes at end of device type 55.

TABLE III. Group A inspection for device type 52 – Continued.

Symbol	MIL-STD-883 method	Cases E,F, N, Z	Terminal conditions 1/																Measured terminal	Limits						Unit
			1	2	3	4	5	6	7	8	9	10	11	12	13	14	15	16		Subgroup 9 T_C = 25°C		Subgroup 10 T_C = 125°C		Subgroup 11 T_C = -55°C		
		Test no.	DATA	JAM 1	JAM 2	Q2	Q1	Q3	JAM 3	V_{SS}	JAM 4	PRESET ENABLE	Q4	JAM 5	Q5	CLOCK	RESET	V_{DD}		Min	Max	Min	Max	Min	Max	
t_{PHL1} 6/	3003	66	IN	GND	GND				GND	GND	GND	GND		GND	OUT	IN	GND	5.0V	CLOCK TO	13	700	18	980	13	700	ns
t_{PHL1}	"	67	"	"	"	OUT	OUT	OUT	"	"	"	"	OUT	"		"	"	"	OUTPUT	13	700	18	980	13	700	"
t_{PLH1}	"	68	"	"	"				"	"	"	"		"	OUT	"	"	"	CLOCK TO	13	700	18	980	13	700	"
t_{PLH1}	"	69	"	"	"	OUT	OUT	OUT	"	"	"	"	OUT	"		"	"	"	OUTPUT	13	700	18	980	13	700	"
t_{PLH2}	"	70	"	"	"				"	"	"	"		"	OUT	"	IN	"	RESET TO	13	700	18	980	13	700	"
t_{PLH2}	"	71	"	"	"	OUT	OUT	OUT	"	"	"	"	OUT	"		"	IN	"	OUTPUT	13	700	18	980	13	700	"
t_{THL}	3004	72	"	"	"				"	"	"	"		"	OUT	"	GND	"	OUTPUT	10	250	14	350	10	250	"
t_{THL}	"	73	"	"	"	OUT	OUT	OUT	"	"	"	"	OUT	"		"	"	"		10	250	14	350	10	250	"
t_{TLH}	"	74	"	"	"				"	"	"	"		"	OUT	IN	GND	"	OUTPUT	10	250	14	350	10	250	"
t_{TLH}	"	75	"	"	"	OUT	OUT	OUT	"	"	"	"	OUT	"		"	"	"	OUTPUT	10	250	14	350	10	250	"
t_{SHL1} 6/		76	"	"	"	"	"	"	"	"	"	IN	"	"	"	"	"	"	PRESET TO CLOCK		400					"
t_{SHL2}		77	"	"	"	"	"	"	"	"	"	GND	"	"	"	"	IN	"	RESET TO CLOCK		400	560		400		"
t_{SHL3}		78	"	"	"	"	"	"	"	"	"	GND	"	"	"	"	GND	"	DATA TO CLOCK		200	560		400		"
t_{SLH3}		79	"	"	"	"	"	"	"	"	"	GND	"	"	"	"	GND	"	DATA TO CLOCK		200	280		200		"
																						280		200		

See footnotes at end of device type 55.

TABLE III. Group A inspection for device type 53.

Symbol	MIL-STD-883 method	Cases E,F, N, Z	Terminal conditions 1/																Measured terminal	Limits						Unit
			1	2	3	4	5	6	7	8	9	10	11	12	13	14	15	16		Subgroup 1 T_C = 25°C		Subgroup 2 T_C = 125°C		Subgroup 3 T_C = -55°C		
		Test no.	Q12	Q13	Q14	Q6	Q5	Q7	Q4	V_{SS}	Q1	CLOCK	RESET	Q9	Q8	Q10	Q11	V_{DD}		Min	Max	Min	Max	Min	Max	
V_{IC} (POS)		1										1mA	1mA					GND	EACH INPUT		1.5					V
V_{IC} 2/ (NEG)		2								GND		-1mA	-1mA						EACH INPUT		-6					V
I_{IL1} 6/	3009	3								"		GND	GND					18.0V	ALL INPUTS TOGETHER		-200.0					nA
I_{IL2}	3009	4								"		GND	GND					"	EACH INPUT		-100.0		-100.0			"
I_{IH1}	3010	5								"		18.0V	18.0V					"	ALL INPUTS TOGETHER		200.0					"
I_{IH2}	3010	6								"		18.0V	18.0V					"	EACH INPUT		100.0		100.0			"
I_{OL}		7	4/	4/	4/	4/	4/	4/	4/	"	4/	4/	4/	4/	4/	4/	4/	4/	EACH OUTPUT	4/	4/	4/	4/	4/	4/	mA
I_{OH}		8	"	"	"	"	"	"	"	"	"	"	"	"	"	"	"	"	"	"	"	"	"	"	"	mA
V_{OL}	3007	9	"	"	"	"	"	"	"	"	"	"	"	"	"	"	"	"	"	"	"	"	"	"	"	V
V_{OH}	3006	10	"	"	"	"	"	"	"	"	"	"	"	"	"	"	"	"	"	"	"	"	"	"	"	"
V_{IL}		11	"	"	"	"	"	"	"	"	"	"	"	"	"	"	"	"	EACH INPUT	"	"	"	"	"	"	"
V_{IH}		12	"	"	"	"	"	"	"	"	"	"	"	"	"	"	"	"	EACH INPUT	"	"	"	"	"	"	"
I_{SS} 5/	3005	13								"	GND	GND	18.0V					18.0V	V_{SS}	-1.0	"	-10.0	"			µA
	"	14								"		PU	GND					"	V_{SS}		"		"			"
	"	15								"		GND	"					"	None		"		"			"
	"	16								"		PU	"					"	V_{SS}		"		"			"
	"	17								"		18.0V	"					"	None		"		"			"
	"	18								"			"					"	V_{SS}		"		"			"
																				Subgroup 4 T_C = 25°C						
																				Min	Max					
C_i 3/		19								GND		IN	IN					GND	EACH INPUT		12					pF

See footnotes at end of device type 55.

TABLE III. Group A inspection for device type 53 – Continued.

Symbol	MIL-STD-883 method	Cases E,F, N, Z	Terminal conditions 1/																Measured terminal	Limits						Unit
			1	2	3	4	5	6	7	8	9	10	11	12	13	14	15	16		Subgroup 7 T_C = 25°C		Subgroup 8 T_C = 125°C		Subgroup 8 T_C = -55°C		
		Test no.	Q12	Q13	Q14	Q6	Q5	Q7	Q4	V_{SS}	Q1	CLOCK	RESET	Q9	Q8	Q10	Q11	V_{DD}		Min	Max	Min	Max	Min	Max	
Truth table test 5/	3014	20	L	L	L	L	L	L	L	GND	L	GND	5.0V	L	L	L	L	5.0V	EACH OUTPUT							
	“	21	L	L	L	L	L	L	L	“	L	GND	GND	L	L	L	L	“								
	“	22	L	L	L	L	L	L	L	“	L	5.0V	“	L	L	L	L	“	“							
	“	23	L	L	L	L	L	L	L	“	H	GND	“	L	L	L	L	“	“							
	“	24	L	L	L	L	L	L	L	“	H	5.0V	“	L	L	L	L	“	“							
	“	25	L	L	L	L	L	L	L	“	L	GND	“	L	L	L	L	“	“							
	“	26	X	X	X	X	X	X	X	“	X	PE	“	X	X	X	X	“	“							
	“	27	L	L	L	L	L	L	L	“	H	5.0V	“	L	L	L	L	“	“							
	“	28	L	L	L	L	L	L	H	“	L	GND	“	L	L	L	L	“	“							
	“	29	X	X	X	X	X	X	X	“	X	PF	“	X	X	X	X	“	“							
	“	30	L	L	L	L	L	L	H	“	H	5.0V	“	L	L	L	L	“	“							
	“	31	L	L	L	L	H	L	L	“	L	GND	“	L	L	L	L	“	“							
	“	32	X	X	X	X	X	X	X	“	X	PG	“	X	X	X	X	“	“							
	“	33	L	L	L	L	H	L	H	“	H	5.0V	“	L	L	L	L	“	“							
	“	34	L	L	L	H	L	L	L	“	L	GND	“	L	L	L	L	“	“							
	“	35	X	X	X	X	X	X	X	“	X	PH	“	X	X	X	X	“	“							
	“	36	L	L	L	H	H	L	H	“	H	5.0V	“	L	L	L	L	“	“							
	“	37	L	L	L	L	L	H	L	“	L	GND	“	L	L	L	L	“	“							
	“	38	X	X	X	X	X	X	X	“	X	PJ	“	X	X	X	X	“	“							
	“	39	L	L	L	H	H	H	H	“	H	5.0V	“	L	L	L	L	“	“							
	“	40	L	L	L	L	L	L	L	“	L	GND	“	L	H	L	L	“	“							
	“	41	X	X	X	X	X	X	X	“	X	PL	“	X	X	X	X	“	“							
	“	42	L	L	L	H	H	H	H	“	H	5.0V	“	L	H	L	L	“	“							
	“	43	L	L	L	L	L	L	L	“	L	GND	“	H	L	L	L	“	“							
	“	44	X	X	X	X	X	X	X	“	X	PM	“	X	X	X	X	“	“							
	“	45	L	L	L	H	H	H	H	“	H	5.0V	“	H	H	L	L	“	“							
	“	46	L	L	L	L	L	L	L	“	L	GND	“	L	L	H	L	“	“							
	“	47	X	X	X	X	X	X	X	“	X	PN	“	X	X	X	X	“	“							
	“	48	L	L	L	H	H	H	H	“	H	5.0V	“	H	H	H	L	“	“							
	“	49	L	L	L	L	L	L	L	“	L	GND	“	L	L	L	H	“	“							
	“	50	X	X	X	X	X	X	X	“	X	PR	“	X	X	X	X	“	“							
	“	51	L	L	L	H	H	H	H	“	H	5.0V	“	H	H	H	H	“	“							
	“	52	H	L	L	L	L	L	L	“	L	GND	“	L	L	L	L	“	“							
	“	53	X	X	X	X	X	X	X	“	X	PS	“	X	X	X	X	“	“							
	“	54	H	L	L	H	H	H	H	“	H	5.0V	“	H	H	H	H	“	“							
	“	55	L	H	L	L	L	L	L	“	L	GND	“	L	L	L	L	“	“							
	“	56	X	X	X	X	X	X	X	“	X	PT	“	X	X	X	X	“	“							
	“	57	H	H	L	H	H	H	H	“	H	5.0V	“	H	H	H	H	“	“							
	“	58	L	L	H	L	L	L	L	“	L	GND	“	L	L	L	L	“	“							
	“	59	X	X	X	X	X	X	X	“	X	PV	“	X	X	X	X	“	“							
	“	60	H	H	H	H	H	H	H	“	H	5.0V	“	H	H	H	H	“	“							
	“	61	L	L	L	L	L	L	L	“	L	GND	“	L	L	L	L	“	“							
	“	62	X	X	X	X	X	X	X	“	X	PY	“	X	X	X	X	“	“							
	“	63	H	L	H	H	L	L	H	“	L	GND	“	L	H	H	L	“	“							
	“	64	L	L	L	L	L	L	L	“	L	GND	5.0V	L	L	L	L	“	“							
	“	65	L	L	L	L	L	L	L	“	L	GND	GND	L	L	L	L	“	“							
	“	66	X	X	X	X	X	X	X	“	X	PU	GND	X	X	X	X	“	“							
	“	67	L	H	L	L	H	H	L	“	H	GND	GND	H	L	L	H	“	“							
	“	68	L	L	L	L	L	L	L	“	L	GND	5.0V	L	L	L	L	“	“							
	“	69	L	L	L	L	L	L	L	“	L	GND	GND	L	L	L	L	“	“							

See footnotes at end of device type 55.

TABLE III. Group A inspection for device type 53 – Continued.

Symbol	MIL-STD-883 method	Cases E,F, N, Z	Terminal conditions 1/																Measured terminal	Limits						Unit
			1	2	3	4	5	6	7	8	9	10	11	12	13	14	15	16		Subgroup 9 T_C = 25°C		Subgroup 10 T_C = 125°C		Subgroup 11 T_C = -55°C		
		Test no.	Q12	Q13	Q14	Q6	Q5	Q7	Q4	V_{SS}	Q1	CLOCK	RESET	Q9	Q8	Q10	Q11	V_{DD}		Min	Max	Min	Max	Min	Max	
t_{PHL1} 6/	3003	70								GND	OUT	IN	GND					5.0V	CLOCK TO OUTPUT	.013	0.55	.018	0.77	.013	0.55	µs
	“	71							OUT	“		“	“					“		.052	1.54	.072	2.15	.052	1.54	“
	“	72					OUT			“		“	“					“	“	.065	1.87	.090	2.62	.065	1.87	“
	“	73				OUT				“		“	“					“	“	.078	2.20	.108	3.08	.078	2.20	“
	“	74						OUT		“		“	“					“	“	.091	2.53	.126	3.54	.091	2.53	“
	“	75								“		“	“		OUT			“	“	.104	2.86	.144	4.00	.104	2.86	“
	“	76								“		“	“	OUT				“	“	.117	3.19	.162	4.47	.117	3.19	“
	“	77								“		“	“			OUT		“	“	.130	3.52	.180	4.93	.130	3.52	“
	“	78								“		“	“				OUT	“	“	.143	3.85	.198	5.39	.143	3.85	“
	“	79	OUT							“		“	“					“	“	.156	4.18	.216	5.85	.156	4.18	“
	“	80		OUT						“		“	“					“	“	.169	4.51	.234	6.31	.169	4.51	“
	“	81			OUT					“		“	“					“	“	.182	4.84	.252	6.78	.182	4.84	“
t_{PLH1}	“	82								“	OUT	“	“					“	“	.013	0.55	.018	0.77	.013	0.55	“
	“	83							OUT	“		“	“					“	“	.052	1.54	.072	2.15	.052	1.54	“
	“	84					OUT			“		“	“					“	“	.065	1.87	.090	2.62	.065	1.87	“
	“	85				OUT				“		“	“					“	“	.078	2.20	.108	3.08	.078	2.20	“
	“	86						OUT		“		“	“					“	“	.091	2.53	.126	3.54	.091	2.53	“
	“	87								“		“	“		OUT			“	“	.104	2.86	.144	4.00	.104	2.86	“
	“	88								“		“	“	OUT				“	“	.117	3.19	.162	4.47	.117	3.19	“
	“	89								“		“	“			OUT		“	“	.130	3.52	.180	4.93	.130	3.52	“
	“	90								“		“	“				OUT	“	“	.143	3.85	.198	5.39	.143	3.85	“
	“	91	OUT							“		“	“					“	“	.156	4.18	.216	5.85	.156	4.18	“
	“	92		OUT						“		“	“					“	“	.169	4.51	.234	6.31	.169	4.51	“
	“	93			OUT					“		“	“					“	“	.182	4.84	.252	6.78	.182	4.84	“
t_{PHL2}		94	OUT	OUT	“	OUT	OUT	OUT	OUT	“	OUT	“	IN	OUT	OUT	OUT	OUT	“	RESET TO OUTPUT	13	450	18	630	13	450	ns
t_{THL}	3004	95	“	“	“	“	“	“	“	“	“	“	GND	“	“	“	“	“	OUTPUT	10	200	14	280	10	280	ns
t_{TLH}	3004	96	“	“	“	“	“	“	“	“	“	“	GND	“	“	“	“	“	OUTPUT	10	200	14	280	10	280	ns

See footnotes at end of device type 55.

TABLE III. Group A inspection for device type 54.

Symbol	MIL-STD-883 method	Cases E,F, N, Z	Terminal conditions 1/																Measured terminal	Limits						Unit
			1	2	3	4	5	6	7	8	9	10	11	12	13	14	15	16		Subgroup 1 T_C = 25°C		Subgroup 2 T_C = 125°C		Subgroup 3 T_C = -55°C		
		Test no.	1 OUT	0 OUT	2 OUT	5 OUT	6 OUT	NC	3 OUT	V_{SS}	NC	7 OUT	4 OUT	CARRY OUT	CLOCK ENABLE	CLOCK	RESET	V_{DD}		Min	Max	Min	Max	Min	Max	
V_{IC} (POS)		1													1 mA	1 mA	1 mA	GND	EACH INPUT		1.5					V
V_{IC} (NEG)		2								GND					-1 mA	-1 mA	-1 mA		EACH INPUT		-6.0					V
I_{IL1} 2/	3009	3								"					GND	GND	GND	18.0V	ALL INPUTS TOGETHER		-300.0					nA
I_{IL2}	3009	4								"					GND	GND	GND	"	EACH INPUT		-100.0		-100.0			"
I_{IH1}	3010	5								"					18.0V	18.0V	18.0V	"	ALL INPUTS TOGETHER		300.0					"
I_{IH2}	3010	6								"					18.0V	18.0V	18.0V	"	EACH INPUT		100.0		100.0			"
I_{OL}		7	4/	4/	4/	4/	4/		4/	"		4/	4/	4/	4/	4/	4/	4/	EACH OUTPUT	4/	4/	4/	4/	4/	4/	mA
I_{OH}		8	"	"	"	"	"		"	"		"	"	"	"	"	"	"	"	"	"	"	"	"	"	mA
V_{OL}	3007	9	"	"	"	"	"		"	"		"	"	"	"	"	"	"	"	"	"	"	"	"	"	V
V_{OH}	3006	10	"	"	"	"	"		"	"		"	"	"	"	"	"	"	"	"	"	"	"	"	"	"
V_{IL}		11	"	"	"	"	"		"	"		"	"	"	"	"	"	"	EACH INPUT	"	"	"	"	"	"	"
V_{IH}		12	"	"	"	"	"		"	"		"	"	"	"	"	"	"	EACH INPUT	"	"	"	"	"	"	"
I_{SS} 5/	3005	13								"					GND	GND	18.0V	18.0V	V_{SS}		-0.5					µA
	"	14								"					"	GND	GND	"	V_{SS}		"		"			"
	"	15								"					"	18.0V	"	"	None		"	-5.0	"			"
	"	16								"					"	GND	"	"	V_{SS}		"		"			"
	"	17								"					"	18.0V	"	"	None		"		"			"
	"	18								"					"	GND	"	"	V_{SS}		"		"			"
	"	19								"					"	18.0V	"	"	None		"		"			"
	"	20								"					"	GND	"	"	V_{SS}		"		"			"
	"	21								"					"	18.0V	"	"	V_{SS}		"		"			"
	"	22								"					"	GND	"	"	None		"		"			"
	"	23								"					"	18.0V	"	"	V_{SS}		"		"			"
	"	24								"					"	GND	"	"	None		"		"			"
	"	25								"					"	18.0V	"	"	V_{SS}		"		"			"
	"	26								"					"	GND	"	"	None		"		"			"
	"	27								"					"	18.0V	"	"	V_{SS}		"		"			"
	"	28								"					18.0V	18.0V	"	"	V_{SS}		"		"			"

See footnotes at end of device type 55.

TABLE III. Group A inspection for device type 54 – Continued.

Symbol	MIL-STD-883 method	Cases E,F, Z,N	Terminal conditions 1/																Measured terminal	Limits						Unit
			1	2	3	4	5	6	7	8	9	10	11	12	13	14	15	16		Subgroup 4 T_C = 25°C						
		Test no.	1 OUT	0 OUT	2 OUT	5 OUT	6 OUT	NC	3 OUT	V_{SS}	NC	7 OUT	4 OUT	CARRY OUT	CLOCK ENABLE	CLOCK	RESET	V_{DD}		Min	Max	Min	Max	Min	Max	
C_I 3/	3012	29								GND					IN	IN	IN	GND	EACH INPUT		12					pF
																				Subgroup 7 T_C = 25°C		Subgroup 8 T_C = 125°C		Subgroup 8 T_C = -55°C		
																				Min	Max	Min	Max	Min	Max	
Truth table test 5/	3014	30	L	H	L	L	L			GND			L	H	GND	5.0V	5.0V	5.0V	EACH OUTPUT							
	"	31	L	H	L	L	L		L	"		L	L	H	"	5.0V	GND	"								
	"	32	H	L	L	L	L	L	L	"		L	L	H	"	PA	"	"	"							
	"	33	L	L	H	L	L		L	"	L	L	L	H	"	"	"	"	"							
	"	34	L	L	L	L	L		H	"		L	L	H	"	"	"	"	"							
	"	35	L	L	L	L	L		L	"		L	H	L	"	"	"	"	"							
	"	36	L	L	L	H	L		L	"		L	L	L	"	"	"	"	"							
	"	37	L	L	L	L	H		L	"		L	L	L	"	"	"	"	"							
	"	38	L	L	L	L	L		L	"		H	L	L	"	"	"	"	"							
	"	39	L	H	L	L	L		L	"		L	L	H	"	"	"	"	"							
	"	40	H	L	L	L	L		L	"		L	L	H	"	"	"	"	"							
	"	41	H	L	L	L	L		L	"		L	L	H	5.0V	5.0V	"	"	"							
	"	42	H	L	L	L	L		L	"		L	L	H	5.0V	GND	"	"	"							
	"	43	H	L	L	L	L		L	"		L	L	H	5.0V	5.0V	"	"	"							
	"	44	L	L	H	L	L		L	"		L	L	H	GND	5.0V	"	"	"							
	"	45	X	X	X	X	X		X	"		X	X	X	"	PB	"	"	"							
	"	46	L	L	L	L	L		L	"		L	H	L	"	5.0V	"	"	"							
	"	47	L	L	L	L	L		L	"		L	H	L	"	GND	"	"	"							
	"	48	L	H	L	L	L		L	"		L	L	H	"	GND	5.0V	"	"							
	"	49	L	H	L	L	L		L	"		L	L	H	"	GND	GND	"	"							
	"	50	H	L	L	L	L		L	"		L	L	H	"	5.0V	"	"	"							
	"	51	X	X	X	X	X		X	"		X	X	X	"	PC	"	"	"							
	"	52	L	L	L	L	L		L	"		L	H	L	"	5.0V	"	"	"							
	"	53	L	H	L	L	L		L	"		L	L	H	"	5.0V	5.0V	"	"							
	"	54	L	H	L	L	L		L	"		L	L	H	"	5.0V	GND	"	"							
																				Subgroup 9 T_C = 25°C		Subgroup 10 T_C = 125°C		Subgroup 11 T_C = -55°C		
																				Min	Max	Min	Max	Min	Max	
t_{PHL1} 6/	3003	55								GND				OUT	GND	IN	GND	5.0V	CLOCK TO OUTPUT	.013	.829	.018	1.16	.013	.829	µs
t_{PHL1}	"	56	OUT	OUT	OUT	OUT	OUT		OUT	"		OUT	OUT		"	"	"	"		.013	1.00	.018	1.40	.013	1.00	"
t_{PLH1}	"	57								"				OUT	"	"	GND	"	CLOCK TO OUTPUT	.013	.829	.018	1.16	.013	.829	"
t_{PLH1}	"	58	OUT	OUT	OUT	OUT	OUT		OUT	"		OUT	OUT		"	"	"	"		.013	1.00	.018	1.40	.013	1.00	"
t_{PLH2}	"	59								"					"	"	IN	"	RESET TO OUTPUT	.013	1.00	.018	1.40	.013	1.00	"
t_{PLH2}	"	60								"				OUT	"	"	"	"		.013	0.80	.018	1.12	.013	0.80	"
t_{PHL2}	"	61	OUT	OUT	OUT	OUT	OUT		OUT	"		OUT	OUT		"	"	IN	"	RESET TO OUTPUT	.013	1.00	.18	1.40	.013	1.00	"
t_{THL}	3004	62								"				OUT	"	"	GND	"	OUTPUT	10	200	14	280	10	200	ns
t_{THL}	"	63	OUT	OUT	OUT	OUT	OUT		OUT	"		OUT	OUT		"	"	"	"	OUTPUT	10	200	14	280	10	200	ns
t_{TLH}	"	64								"				OUT	"	"	GND	"	OUTPUT	10	360	14	504	10	360	ns
t_{TLH}	"	65	OUT	OUT	OUT	OUT	OUT		OUT	"		OUT	OUT		"	"	"	"	OUTPUT	10	360	14	504	10	360	ns
t_{SHL}	"	66								"				OUT	IN	"	"	"	CLOCK ENABLE TO CLOCK	250		350		250		ns
t_{SHL1}	"	67	OUT	OUT	OUT	OUT	OUT		OUT	"		OUT	OUT		IN	"	"	"	CLOCK ENABLE TO CLOCK		250		350		250	ns
t_{SHL2}	"	68	OUT	OUT						"					GND	"	IN	"	RESET TO CLOCK	400			560		400	ns

See footnotes at end of device type 55.

TABLE III. Group A inspection for device type 55.

Symbol	MIL-STD-883 method	Cases A,B,C,D T,X,Y	Terminal conditions 1/														Measured terminal	Limits						Unit
			1	2	3	4	5	6	7	8	9	10	11	12	13	14		Subgroup 1 T_C = 25°C		Subgroup 2 T_C = 125°C		Subgroup 3 T_C = -55°C		
		Test no.	CLOCK	RESET	Q7	Q6	Q5	Q4	V_{SS}	NC	Q3	NC	Q2	Q1	NC	V_{DD}		Min	Max	Min	Max	Min	Max	
V_{IC} (POS)		1	1 mA	1 mA												GND	EACH INPUT		1.5					V
V_{IC} (NEG)		2	-1 mA	-1 mA					GND								EACH INPUT		-6.0					V
I_{IL} 2/	3009	3	GND	GND					"							18.0V	CLOCK				-100.0			nA
I_{IL}	3009	4	GND	GND					"							"	RESET		-100.0		-100.0			"
I_{IH}	3010	5	18.0V	GND					"							"	CLOCK	-100.0			100.0			"
I_{IH}	3010	6	GND	18.0V					"							"	RESET		100.0		100.0			"
I_{OL}		7	4/	4/	4/	4/	4/	4/	"		4/		4/	4/		4/	EACH OUTPUT	4/100.0	4/	4/	4/	4/	4/	mA
I_{OH}		8	"	"	"	"	"	"	"		"		"	"		"	"	"	"	"	"	"	"	mA
V_{OL}	3007	9	"	"	"	"	"	"	"		"		"	"		"	"	"	"	"	"	"	"	V
V_{OH}	3006	10	"	"	"	"	"	"	"		"		"	"		"	"	"	"	"	"	"	"	"
V_{IL}		11	"	"	"	"	"	"	"		"		"	"		"	EACH INPUT	"	"	"	"	"	"	"
V_{IH}		12	"	"	"	"	"	"	"		"		"	"		"	EACH INPUT	"	"	"	"	"	"	"
I_{SS} 5/	3005	13	GND	18.0V					"							18.0V	V_{SS}		-0.5					µA
	"	14	GND	GND					"							"	V_{SS}		"		"			"
	"	15	PI	"					"							"	None		"		"			"
	"	16	18.0V	"					"							"	V_{SS}		"	-5.0	"			"
	"	17	GND	"					"							"	None		"		"			"
	"	18	PI	"					"							"	None		"		"			"
	"	19	GND	"					"							"	V_{SS}		"		"			"
																		Subgroup 4 T_C = 25°C						
																		Min	Max					
C_i 3/	3012	20	IN	IN					GND							GND	EACH INPUT		12					pF

See footnotes at end of device type 55.

TABLE III. Group A inspection for device type 55 – Continued.

Symbol	MIL-STD-883 method	Cases A,B,C,D T,X,Y	Terminal conditions 1/														Measured terminal	Limits						Unit
			1	2	3	4	5	6	7	8	9	10	11	12	13	14		Subgroup 7 T_C = 25°C		Subgroup 8 T_C = 125°C		Subgroup 8 T_C = -55°C		
		Test no.	CLOCK	RESET	Q7	Q6	Q5	Q4	V_{SS}	NC	Q3	NC	Q2	Q1	NC	V_{DD}		Min	Max	Min	Max	Min	Max	
Truth table test 5/	3014	21	GND	5.0V	L	L	L	L	GND					L			EACH OUTPUT							
	"	22	GND	GND	L	L	L	L	"		L		L	L		"								
	"	23	5.0V	"	L	L	L	L	"		L		L	L	5.0V	"	"							
	"	24	GND	"	L	L	L	L	"	L	L	L	L	H		"	"							
	"	25	5.0V	"	L	L	L	L	"		L		L	H		"	"							
	"	26	GND	"	L	L	L	L	"		L		H	L		"	"							
	"	27	5.0V	"	L	L	L	L	"		L		H	L		"	"							
	"	28	GND	"	L	L	L	L	"		L		H	H		"	"							
	"	29	5.0V	"	L	L	L	L	"		L		H	H		"	"							
	"	30	GND	"	L	L	L	L	"		H		L	L		"	"							
	"	31	PC	"	X	X	X	X	"		X		X	X		"	"							
	"	32	5.0V	"	L	L	L	L	"		H		H	H		"	"							
	"	33	GND	"	L	L	L	H	"		L		L	L		"	"							
	"	34	PF	"	X	X	X	X	"		X		X	X		"	"							
	"	35	5.0V	"	L	L	L	H	"		H		H	H		"	"							
	"	36	GND	"	L	L	H	L	"		L		L	L		"	"							
	"	37	PG	"	X	X	X	X	"		X		X	X		"	"							
	"	38	5.0V	"	L	L	H	H	"		H		H	H		"	"							
	"	39	GND	"	L	H	L	L	"		L		L	L		"	"							
	"	40	PH	"	X	X	X	X	"		X		X	X		"	"							
	"	41	5.0V	"	L	H	H	H	"		H		H	H		"	"							
	"	42	GND	"	H	L	L	L	"		L		L	L		"	"							
	"	43	PJ	"	X	X	X	X	"		X		X	X		"	"							
	"	44	5.0V	"	H	H	H	H	"		H		H	H		"	"							
	"	45	GND	"	L	L	L	L	"		L		L	L		"	"							
	"	46	PI	"	X	X	X	X	"		X		X	X		"	"							
	"	47	GND	"	L	H	L	H	"		L		H	L		"	"							
	"	48	GND	5.0V	L	L	L	L	"		L		L	L		"	"							
	"	49	GND	GND	L	L	L	L	"		L		L	L		"	"							
	"	50	PK	GND	X	X	X	X	"		X		X	X		"	"							
	"	51	GND	GND	H	L	H	L	"		H		L	H		"	"							
	"	52	GND	5.0V	L	L	L	L	"		L		L	L		"	"							
	"	53	GND	GND	L	L	L	L	"		L		L	L		"	"							
																		Subgroup 9 T_C = 25°C		Subgroup 10 T_C = 125°C		Subgroup 11 T_C = -55°C		
																		Min	Max	Min	Max	Min	Max	
t_{PHL1} 6/	3003	54	IN	GND					GND					OUT		5.0V	CLOCK TO OUTPUT	.013	0.35	.018	0.49	.013	0.35	µs
	"	55	"	"					"				OUT			"		.026	0.55	.036	0.77	.026	0.55	"
	"	56	"	"					"		OUT					"	"	.039	0.75	.054	1.05	.039	0.75	"
	"	57	"	"				OUT	"							"	"	.052	0.95	.072	1.33	.052	0.95	"
	"	58	"	"			OUT		"							"	"	.065	1.15	.090	1.61	.065	1.15	"
	"	59	"	"		OUT			"							"	"	.078	1.35	.108	1.89	.078	1.35	"
	"	60	"	"	OUT				"							"		.091	1.55	.126	2.17	.091	1.55	"
t_{PLH1}	"	61	"	"					"					OUT		"	"	.013	0.35	.018	0.49	.013	0.35	"
	"	62	"	"					"				OUT			"	"	.026	0.55	.036	0.77	.026	0.55	"
	"	63	"	"					"		OUT					"	"	.039	0.75	.054	1.05	.039	0.75	"
	"	64	"	"				OUT	"							"	"	.052	0.95	.072	1.33	.052	0.95	"
	"	65	"	"			OUT		"							"	"	.065	1.15	.090	1.61	.065	1.15	"
	"	66	"	"		OUT			"							"	"	.078	1.35	.108	1.89	.078	1.35	"
	"	67	"	"	OUT				"							"	"	.091	1.55	.126	2.17	.091	1.55	"
t_{PHL2}	"	68	"	IN	OUT	OUT	OUT	OUT	"				OUT	OUT		"	RESET TO OUTPUT	13	350	18	490	13	350	ns
t_{THL}	3004	69	"	GND	"	"	"	"	"	OUT	"			"		"	OUTPUT	10	200	14	280	10	200	ns
t_{TLH}	3004	70	"	GND	"	"	"	"	"		"			"		"	OUTPUT	10	200	14	280	10	200	ns

See footnotes on next page.

1/ Pins not designated may be high-level logic, low-level logic, or open. Exceptions are as follows:

a. V_{IC}(POS) tests, the V_{SS} terminal shall be open.

b. V_{IC}(NEG) tests, the V_{DD} terminal shall be open.

c. I_{SS} tests, the output terminal shall be open.

2/ The device manufacturer may, at his option, measure I_{IL} and I_{IH} at 25°C for each individual input or measure all inputs together.

3/ See 4.4.1c for C_i measurement.

4/ Procedures for input/output tests of the device parameters specified below are described in figures 4, 5, 6, and 7. Included with the specified parameters are test conditions and test limits at three temperatures. These tests shall be performed at each specified V_{DD} voltage at the specified conditions. V_{IL}/V_{IH} test maybe performed as final attributes data.

Symbol	Parameter	V_{DD} (V dc)	Conditions	Limits						Unit
				T_C = -55°C		T_C = 25°C		T_C = 125°C		
				Min	Max	Min	Max	Min	Max	
V_{OL}	Low-level output voltage	15	$V_I = V_{SS}$ or V_{DD} $\|I_O\| \leq 1\ \mu A$				0.05		0.05	V
V_{OH}	High-level output voltage	15	$V_I = V_{SS}$ or V_{DD} $\|I_O\| \leq 1\ \mu A$	14.95	0.05	14.95		14.95		V
V_{IL}	Input low voltage	5 10 15	V_O = 0.5 V or 4.5 V V_O = 1.0 V or 9.0 V V_O = 1.5 V or 13.5 V $\|I_O\| \leq 1\ \mu A$	1.5 3.0 4.0	1.5	3.0 4.0	1.5	3.0 4.0	V	
V_{IH}	Input high voltage	5 10 15	V_O = 0.5 V or 4.5 V V_O = 1.0 V or 9.0 V V_O = 1.5 V or 13.5 V $\|I_O\| \leq 1\ \mu A$	3.5	7.0 11.0	3.5	7.0 11.0	3.5	7.0 11.0	V
I_{OL}	Output low (sink) current	5 15	V_O = 0.4 V, V_I = 0 or 5 V V_O = 1.5 V, V_I = 0 or 15 V	0.64 4.2	0.51	3.4	0.36	2.4	mA	
I_{OH}	Output high (source) current	5 15	V_O = 4.6 V, V_I = 0 or 5 V V_O = 13.5 V, V_I = 0 or 15 V	-0.64 -4.2	-0.51	-3.4	-0.36	-2.4	mA	

5/ This I_{SS} and truth table tests shall be performed in the test number sequence shown with no intervening changes to terminal conditions. The truth table tests shall be performed with V_{IH} and $V_{DD} \leq 5.0$ V and ≥ 18.0 V. Table III shows the lower of these two voltages. During the functional test, input terminals designated "PA", "PB", etc., shall have applied thereto a specified number of single pulses with the following parameters: Pulse amplitude = V_{DD} maximum to V_{DD} = 4% minimum. These pulses are enumerated as follows:

Symbol	Pulses	Symbol	Pulses	Symbol	Pulses	Symbol	Pulses
PA	1	PF	7	PK	85	PS	2047
PB	2	PG	15	PL	127	PT	4095
PC	3	PH	31	PM	255	PU	5461
PD	4	PI	42	PN	511	PV	8191
PE	5	PJ	63	PR	1023	PY	10922

Also during the truth table tests, device output voltages are: don't care "X", high "H", and low "L" as specified in the terminal conditions columns. The output voltage limits over the specified temperature range are "H" = V_{DD} –0.50 V minimum and "L" = V_{SS} +0.50 V maximum.

6/ See figure 8 for switching time waveforms and test circuit.

7/ Data pin need only be toggled high or low to allow outputs to achieve the proper setup state required to verify the indicated test parameter.

4.4.4 Group D inspection. Group D inspection shall be in accordance with table V of MIL-PRF-38535. End-point electrical parameters shall be as specified in table II herein.

4.4.5 Group E inspection. Group E inspection is required only for parts intended to be marked as radiation hardness assured (see 3.7 herein). RHA levels for device classes B and S shall be as specified in MIL-PRF-38535 and 4.5.4 herein.

4.5 Methods of inspection. Methods of inspection shall be specified and as follows:

4.5.1 Voltage and current. Unless otherwise specified, all voltages given are referenced to the microcircuit V_{SS} terminal. Currents given are conventional current and positive when flowing into the referenced terminal.

4.5.2 Burn-in and life test cool down procedures. When the burn-in and life tests are completed and prior to removal of bias voltages, the devices under test (DUT) shall be cooled to a temperature of 25°C ±3°C; then, electrical parameter end-point measurements shall be performed.

TABLE IV. Delta limits at 25°C.

Parameter 1/	V_{DD}	Device types				
		01	02	03	04	05
I_{SS}	15 V	±125 nA	±125 nA	±250 nA	±125 nA	±125 nA
V_{OL1}	5 V	±0.04 V	±0.04 V	±0.04 V	±0.04 V	±0.04 V
V_{OH1}	5 V	±0.08 V	±0.08 V	±0.08 V	±0.08 V	±0.08 V

Parameter 1/	V_{DD}	Device types				
		51	52	53	54	55
I_{SS}	18 V	±125 nA	±125 nA	±250 nA	±125 nA	±125 nA
I_{OL}	5 V	±15%	±15%	±15%	±15%	±15%
I_{OH}	5 V	±15%	±15%	±15%	±15%	±15%

1/ Each of the above parameters shall be recorded before and after the required burn-in and life tests to determine delta (Δ).

4.5.3 Quiescent supply current (I_{SS} test). When performing quiescent supply current measurements (I_{SS}), the meter shall be placed so that all currents flow through the meter.

4.5.4 Radiation hardness assurance (RHA) testing. The RHA testing shall be performed in accordance with test procedures and sampling specified in MIL-PRF-38535 and herein.

a. Before irradiation, selected samples shall be assembled in qualified packages and pass the governing electrical parameters (group A subgroup 1 at 25°C) and also be subjected to the threshold-voltage test in table VII in order to calculate the delta threshold (ΔV_T) after irradiation.

b. The devices shall be subjected to a total radiation dose as specified in MIL-PRF-38535 for the radiation hardness assurance level being tested, and meet the end-point electrical parameters as defined in table V at 25°C, after exposure. The start and completion of the end-point electrical parameter measurements shall not exceed 2 hours following irradiation.

c. Threshold-voltage test circuit conditions shall be as specified in table VII and on figure 9. In situ and remote testing, the tests shall be performed with the devices biased in accordance with table VI and the bias may be interrupted for up to 1 minute to remove devices to the remote bias fixture.

d. After irradiation, the devices shall pass the truth table test as specified in subgroup 7 in table III or if subgroup 7 is not required, then an equivalent truth table test shall be performed.

TABLE V. Radiation hardened end-point electrical parameters at 25°C.

Parameter	Test limits (All device types)	V_{DD}	
		Device types	
		01-05	51-55
V_{TN}	0.3 V min	10 V	10 V
V_{TP}	2.8 V max	10 V	10 V
ΔV_T	1.4 V max	10 V	10 V
I_{SS}	100 x max limit	15 V	18 V
t_{PLH}	1.35 x max limit	5 V	5 V
t_{PHL}	1.35 x max limit	5 V	5 V

TABLE VI. Bias during exposure to radiation.

Device type	Pin connections 1/		
	V_{DD} = 10 V dc (through a 30 kΩ to 60 kΩ resistor)	V_{SS} = GND	V_{DD} = 10 V dc
01, 51	13, 14, 15	8	16
02, 52	1, 2, 3, 7, 9, 10, 12, 14, 15	8	16
03, 53	10, 11	8	16
04, 54	13, 14, 15	8	16
05, 55	1, 2	7	14

1/ Pins not designated are open, or tied to 10 V dc through a 30 kΩ to 60 kΩ resistor.

5. PACKAGING

5.1 Packaging. For acquisition purposes, the packaging requirements are as specified in the contract or order (see 6.2). When packaging of materiel is to be performed by DoD or in-house contractor personnel, these personnel need to contact the responsible packaging activity to ascertain packaging requirements. Packaging requirements are maintained by the Inventory Control Point's packaging activity within the Military Department or Defense Agency, or within the military service's system commands. Packaging data retrieval is available from the managing Military Department's or Defense Agency's automated packaging files, CD-ROM products, or by contacting the responsible packaging activity.

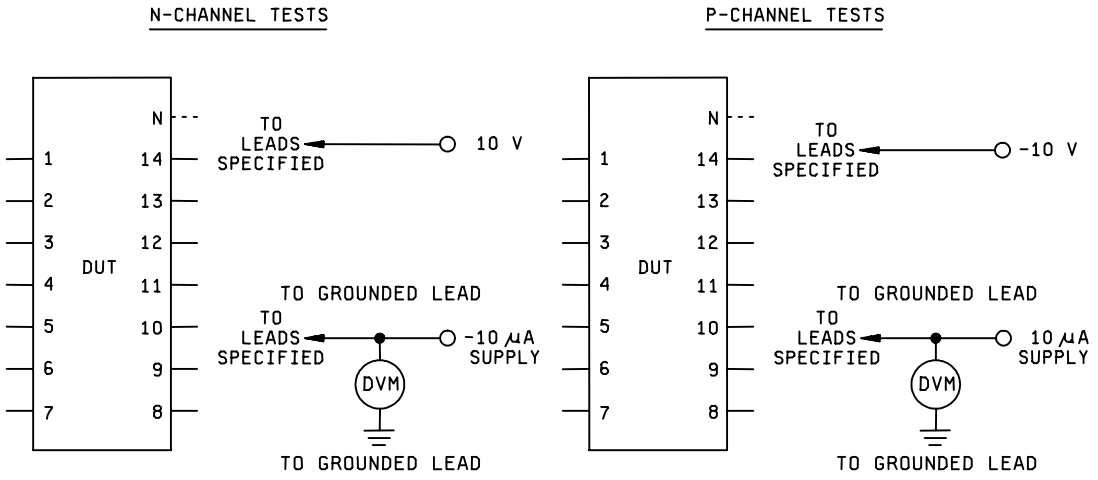

FIGURE 9. Threshold-voltage test circuit.

TABLE VII. Threshold-voltage test circuit conditions.

Device type	GND	10 V	V_{TN} measured at -10 µA supply	GND	-10 V	V_{TP} measured at 10 µA supply
01, 51	15	16	8, 13, 14	15	8	13, 14, 16
02, 52	15	16	1, 2, 3, 7-10, 12, 14	15	1, 2, 3, 7-10, 12, 14	16
03, 53	10	8, 11	8, 11	11	16	16
04, 54	14	13, 15, 16	8	14	8, 13, 15	16
05, 55	1	14	2, 7	1	2, 7	14

6. NOTES

(This section contains information of a general or explanatory nature that may be helpful, but is not mandatory.)

6.1 Intended use. Microcircuits conforming to this specification are intended for original equipment design applications and logistic support of existing equipment.

6.2 Acquisition requirements. Acquisition documents should specify the following:

a. Title, number, and date of the specification.

b. PIN and compliance identifier, if applicable (see 1.2).

c. Requirements for delivery of one copy of the quality conformance inspection data pertinent to the device inspection lot to be supplied with each shipment by the device manufacturer, if applicable.

d. Requirements for certificate of compliance, if applicable.

e. Requirements for notification of change of product or process to contracting activity in addition to notification to the qualifying activity, if applicable.

f. Requirements for failure analysis (including required test condition of method 5003 of MIL-STD-883), corrective action, and reporting of results, if applicable.

g. Requirements for product assurance and radiation hardness assurance options.

h. Requirements for special carriers, lead lengths, or lead forming, if applicable. These requirements should not affect the part number. Unless otherwise specified, these requirements will not apply to direct purchase by or direct shipment to the Government.

i. Requirements for "JAN" marking.

j. Packaging requirements. (see 5.1)

6.3 Superseding information. The requirements of MIL-M-38510 have been superseded to take advantage of the available Qualified Manufacturer Listing (QML) system provided by MIL-PRF-38535. Previous references to MIL-M-38510 in this document have been replaced by appropriate references to MIL-PRF-38535. All technical requirements now consist of this specification and MIL-PRF-38535. The MIL-M-38510 specification sheet number and PIN have been retained to avoid adversely impacting existing government logistics systems and contractors parts lists.

6.4 Qualification. With respect to products requiring qualification, awards will be made only for products which are, at the time of award of contract, qualified for inclusion in Qualified Manufacturers List QML-38535 whether or not such products have actually been so listed by that date. The attention of the contractors is called to these requirements, and manufacturers are urged to arrange to have the products that they propose to offer to the Federal Government tested for qualification in order that they may be eligible to be awarded contracts or purchase orders for the products covered by this specification. Information pertaining to qualification of products may be obtained from DSCC-VQ, P.O. Box 3990, Columbus, Ohio 43218-3990.

6.5 Abbreviations, symbols, and definitions. The abbreviations, symbols, and definitions used herein are defined in MIL-PRF-38535, MIL-HDBK-1331, and as follows:

C_I ..... Input terminal-to-GND capacitance.
GND ..... Ground zero voltage potential.
T_A ..... Free air temperature.
V_{IC}(pos)..... Positive clamping input to V_{DD}.
V_{IC}(neg) ..... Negative clamping input to V_{SS}.
V_{ICL} ..... Clock input voltage.
V_{DD}..... Positive supply voltage.
V_{SS} ..... Negative supply voltage.
I_{SS} ..... Quiescent supply current.

6.6 Logistic support. Lead materials and finishes (see 3.4) are interchangeable. Unless otherwise specified, microcircuits acquired for Government logistic support will be acquired to device class S for National Aeronautics and Space Administration or class B for Department of Defense (see 1.2.2), lead material and finish A (see 3.4). Longer length leads and lead forming should not affect the part number.

6.7 Data reporting. When specified in the purchase order or contract, a copy of the following data, as applicable, will be supplied.

a. Attributes data for all screening tests (see 4.2) and variables data for all static burn-in, dynamic burn-in, and steady-state life tests (see 3.6).

b. A copy of each radiograph.

c. The technology conformance inspection (TCI) data (see 4.4).

d. Parameter distribution data on parameters evaluated during burn-in (see 3.6).

e. Final electrical parameters data (see 4.2d).

f. RHA delta limits.

6.8 Substitutability. The cross-reference information below is presented for the convenience of users. Microcircuits covered by this specification will functionally replace the listed generic-industry type. Generic-industry microcircuit types may not have equivalent operational performance characteristics across military temperature ranges, post irradiation performance or reliability factors equivalent to MIL-M-38510 device types and may have slight physical variations in relation to case size. The presence of this information should not be deemed as permitting substitution of generic-industry types for MIL-M-38510 types or as a waiver of any of the provisions of MIL-PRF-38535.

Military device type	Generic-industry type
01	4017A
02	4018A
03	4020A
04	4022A
05	4024A
51	4017B
52	4018B
53	4020B
54	4022B
55	4024B

6.9 Changes from previous issue. Marginal notations are not used in this revision to identify changes with respect to the previous issue due to the extent of the changes.

Custodians:
Army - CR
Navy - EC
Air Force - 11
DLA - CC

Preparing activity:
DLA - CC

(Project 5962-2067)

Review activities:
Army - MI, SM
Navy - AS, CG, MC, SH, TD
Air Force – 03, 19, 99

NOTE: The activities listed above were interested in this document as of the date of this document. Since organizations and responsibilities can change, you should verify the currency of the information above using ASSIST Online database at http://assist.daps.dla.mil.