INCH-POUND

MIL-M-38510/361B
9 July 2004
SUPERSEDING
MIL-M-38510/361A
11 January 1988

MILITARY SPECIFICATION

MICROCIRCUITS, DIGITAL, BIPOLAR, LOW POWER SCHOTTKY TTL, REGISTERS, CASCADABLE, MONOLITHIC SILICON

Inactive for new design after 8 July 1997.

This specification is approved for use by all Departments and Agencies of the Department of Defense.

The requirements for acquiring the product herein shall consist of this specification sheet and MIL-PRF 38535

1. SCOPE

1.1 Scope. This specification covers the detail requirements for monolithic silicon, advanced Schottky TTL, register microcircuits. Two product assurance classes and a choice of case outlines and lead finishes are provided and are reflected in the complete part number. For this product, the requirements of MIL-M-38510 have been superseded by MIL-PRF-38535, (see 6.3).

1.2 Part or Identifying Number (PIN). The PIN is in accordance with MIL-PRF-38535, and as specified herein.

1.2.1 Device types. The device types are as follows:

Device type	Circuit
01	4-bit D-type register with three state outputs

1.2.2 Device class. The device class is the product assurance level as defined in MIL-PRF-38535.

1.2.3 Case outlines. The case outlines are as designated in MIL-STD-1835 and as follows:

Outline letter	Descriptive designator	Terminals	Package style
E	GDIP1-T16 or CDIP2-T16	16	Dual-in-line
F	GDFP2-F16 or CDFP3-F16	16	Flat pack
X	CQCC2-N20	20	Square leadless chip carrier
2	CQCC1-N20	20	Square leadless chip carrier

Comments, suggestions, or questions on this document should be addressed to: Commander, Defense Supply Center Columbus, ATTN: DSCC-VAS, P. O. Box 3990, Columbus, OH 43218-3990, or emailed to bipolar@dscc.dla.mil. Since contact information can change, you may want to verify the currency of this address information using the ASSIST Online database at www.dodssp.daps.mil.

AMSC N/A FSC 5962

1.3 Absolute maximum ratings.

Supply voltage range	-0.5 V dc to +7.0 V dc
Input voltage range	-1.5 V dc at -18 mA to +5.5 V dc
Storage temperature range	-65° to +150°C
Maximum power dissipation, per device (P_D) 1/	396 mW dc
Lead temperature (soldering, 10 seconds)	+300°C
Thermal resistance, junction to case (θ_{JC}):	
Cases E, F, X, and 2	(See MIL-STD-1835)
Junction temperature (T_J) 2/	175°C

1.4 Recommended operating conditions.

Supply voltage (V_{CC})	4.5 V dc minimum to 5.5 V dc maximum
Minimum high level input voltage (V_{IH})	2.0 V dc
Maximum low level input voltage (V_{IL})	0.7 V dc
Case operating temperature range (T_C)	-55° to +125°C
Minimum clock pulse width	25 ns
Minimum clear pulse width	25 ns
Minimum setup time at data enable	35 ns
Minimum setup time at data	17 ns
Minimum clear inactive state setup time	10 ns
Minimum hold time at data enable	0 ns
Minimum hold time at data	7 ns
Maximum clock input frequency	20 ns

2. APPLICABLE DOCUMENTS

2.1 General. The documents listed in this section are specified in sections 3, 4, or 5 of this specification. This section does not include documents cited in other sections of this specification or recommended for additional information or as examples. While every effort has been made to ensure the completeness of this list, document users are cautioned that they must meet all specified requirements of documents cited in sections 3, 4, or 5 of this specification, whether or not they are listed.

2.2 Government documents.

2.2.1 Specifications and standards. The following specifications and standards form a part of this specification to the extent specified herein. Unless otherwise specified, the issues of these documents are those cited in the solicitation or contract.

DEPARTMENT OF DEFENSE SPECIFICATIONS

MIL-PRF-38535 - Integrated Circuits (Microcircuits) Manufacturing, General Specification for.

DEPARTMENT OF DEFENSE STANDARDS

MIL-STD-883 - Test Method Standard for Microelectronics.
MIL-STD-1835 - Interface Standard Electronic Component Case Outlines

(Copies of these documents are available online at http://assist.daps.dla.mil/quicksearch/ or www.dodssp.daps.mil or from the Standardization Document Order Desk, 700 Robbins Avenue, Building 4D, Philadelphia, PA 19111-5094.)

1/ Must withstand the added P_D due to short-circuit test (e.g., I_{OS}).
2/ Maximum junction temperature should not be exceeded except in accordance with allowable short duration burn-in screening condition in accordance with MIL-PRF-38535.

2.3 Order of precedence. In the event of a conflict between the text of this specification and the references cited herein, the text of this document takes precedence. Nothing in this document, however, supersedes applicable laws and regulations unless a specific exemption has been obtained.

3. REQUIREMENTS

3.1 Qualification. Microcircuits furnished under this specification shall be products that are manufactured by a manufacturer authorized by the qualifying activity for listing on the applicable qualified manufacturers list before contract award (see 4.3 and 6.4).

3.2 Item requirements. The individual item requirements shall be in accordance with MIL-PRF-38535 and as specified herein or as modified in the device manufacturer's Quality Management (QM) plan. The modification in the QM plan shall not affect the form, fit, or function as described herein.

3.3 Design, construction, and physical dimensions. The design, construction, and physical dimensions shall be as specified in MIL-PRF-38535 and herein.

3.3.1 Terminal connections. The terminal connections shall be as specified on figures 1.

3.3.2 Logic diagram. The logic diagram shall be as specified on figure 2.

3.3.3 Truth table. The truth table shall be as specified on figure 3.

3.3.4 Schematic circuits. The schematic circuits shall be maintained by the manufacturer and made available to the qualifying activity and the preparing activity upon request.

3.3.5 Case outlines. The case outlines shall be as specified in 1.2.3.

3.4 Lead material and finish. The lead material and finish shall be in accordance with MIL-PRF-38535 (see 6.6).

3.5 Electrical performance characteristics. The electrical performance characteristics are as specified in table I, and apply over the full recommended case operating temperature range, unless otherwise specified.

3.6 Electrical test requirements. The electrical test requirements for each device class shall be the subgroups specified in table II. The electrical tests for each subgroup are described in table III.

3.7 Marking. Marking shall be in accordance with MIL-PRF-38535.

3.8 Microcircuit group assignment. The devices covered by this specification shall be in microcircuit group number 12 (see MIL-PRF-38535, appendix A).

4. VERIFICATION

4.1 Sampling and inspection. Sampling and inspection procedures shall be in accordance with MIL-PRF-38535 or as modified in the device manufacturer's Quality Management (QM) plan. The modification in the QM plan shall not effect the form, fit, or function as described herein.

4.2 Screening. Screening shall be in accordance with MIL-PRF-38535 and shall be conducted on all devices prior to qualification and quality conformance inspection. The following additional criteria shall apply:

a. The burn-in test duration, test condition, and test temperature, or approved alternatives shall be as specified in the device manufacturer's QM plan in accordance with MIL-PRF-38535. The burn-in test circuit shall be maintained under document control by the device manufacturer's Technology Review Board (TRB) in accordance with MIL-PRF-38535 and shall be made available to the acquiring or preparing activity upon request. The test circuit shall specify the inputs, outputs, biases, and power dissipation, as applicable, in accordance with the intent specified in test method 1015 of MIL-STD-883.

b. Interim and final electrical test parameters shall be as specified in table II, except interim electrical parameters test prior to burn-in is optional at the discretion of the manufacturer.

c. Additional screening for space level product shall be as specified in MIL-PRF-38535.

4.3 Qualification inspection. Qualification inspection shall be in accordance with MIL-PRF-38535.

4.4 Technology Conformance inspection (TCI). Technology conformance inspection shall be in accordance with MIL-PRF-38535 and herein for groups A, B, C, and D inspections (see 4.4.1 through 4.4.4).

4.4.1 Group A inspection. Group A inspection shall be in accordance with table III of MIL-PRF-38535 and as follows:

a. Tests shall be as specified in table II herein.

b. Subgroups 4, 5, and 6 shall be omitted.

TABLE I. Electrical performance characteristics.

Test	Symbol	Conditions $-55°C \le T_C \le +125°C$ unless otherwise specified	Device type	Limits Min	Limits Max	Unit
High level output voltage	V_{OH}	V_{CC} = 4.5 V, I_{OH} = -1 mA, V_{IH} = 2.0 V, V_{IL} = 0.7 V	01	2.4		V
Low level output voltage	V_{OL}	V_{CC} = 4.5 V, I_{OL} = 12 mA V_{IH} = 2.0 V, V_{IL} = 0.7 V	01		0.4	V
Input clamp voltage	V_{IC}	V_{CC} = 4.5 V, I_{IN} = -18 mA, T_C = 25°C	01		-1.5	V
Low level input current	I_{IL}	V_{CC} = 5.5 V, V_{IN} = 0.4 V	01	-30	-380	µA
High level input current	I_{IH1}	V_{CC} = 5.5 V, V_{IN} = 2.7 V	01		20	µA
	I_{IH2}	V_{CC} = 5.5 V, V_{IN} = 5.5 V	01		100	µA
Low level output current outputs off	I_{OZL}	V_{CC} = 5.5 V, V_I = 2.0 V, V_O = 0.4 V	01		-20	µA
High level output current outputs off	I_{OZH}	V_{CC} = 5.5 V, V_I = 0.7 V, V_O = 2.7 V	01		20	µA
Short circuit output current	I_{OS}	V_{CC} = 5.5 V 1/	01	-30	-130	mA
Supply current	I_{CC}	V_{CC} = 5.5 V 2/	01		30	mA
Maximum input clock frequency	f_{MAX}	V_{CC} = 5.5 V R_L = 110Ω C_L = 50 pF	01	20		MHz
Propagation delay time, high to low level, clear to output	t_{PHL1}		01	7	46	ns
Propagation delay time, low to high level, clock to output	t_{PLH2}		01	7	33	ns
Propagation delay time, high to low level, clock to output	t_{PHL2}		01	7	39	ns
Propagation delay time, disable to high level	t_{PZH}		01	2	34	ns
Propagation delay time, disable to low level	t_{PZL}		01	2	35	ns
Propagation delay time, high level to disable	t_{PHZ}		01	2	29	ns
Propagation delay time, low level to disable	t_{PLZ}		01	2	29	ns

1/ Not more than one output should be shorted at a time.
2/ I_{CC} is measured with all outputs open; clear grounded following momentary connection to 4.5V; N, G1, G2 and all data inputs grounded; and the clock input and M at 4.5 V.

TABLE II. Electrical test requirements.

MIL-PRF-38535 test requirements	Subgroups (see table III)	
	Class S devices	Class B devices
Interim electrical parameters	1	1
Final electrical test parameters	1*, 2, 3, 7, 9, 10, 11	1*, 2, 3, 7, 9
Group A test requirements	1, 2, 3, 7, 8, 9, 10, 11	1, 2, 3, 7, 8, 9, 10, 11
Group B electrical test parameters when using the method 5005 QCI option	1, 2, 3, 7, 8, 9, 10, 11	N/A
Group C end-point electrical parameters	1, 2, 3, 7, 8, 9, 10, 11	1, 2, 3
Group D end-point electrical parameters	1, 2, 3	1, 2, 3

*PDA applies to subgroup 1.

4.4.2 Group B inspection. Group B inspection shall be in accordance with table II of MIL-PRF-38535.

4.4.3 Group C inspection. Group C inspection shall be in accordance with table IV of MIL-PRF-38535 and as follows:

a. End-point electrical parameters shall be as specified in table II herein.

b. The steady-state life test duration, test condition, and test temperature, or approved alternatives shall be as specified in the device manufacturer's QM plan in accordance with MIL-PRF-38535. The burn-in test circuit shall be maintained under document control by the device manufacturer's Technology Review Board (TRB) in accordance with MIL-PRF-38535 and shall be made available to the acquiring or preparing activity upon request. The test circuit shall specify the inputs, outputs, biases, and power dissipation, as applicable, in accordance with the intent specified in test method 1005 of MIL-STD-883.

4.4.4 Group D inspection. Group D inspection shall be in accordance with table V of MIL-PRF-38535. End-point electrical parameters shall be as specified in table II herein.

4.5 Methods of inspection. Methods of inspection shall be specified as follows:

4.5.1 Voltage and current. All voltages given are referenced to the microcircuit ground terminal. Currents given are conventional and positive when flowing into the referenced terminal.

Terminal number	Device type 01	
	Cases E and F	Cases X and 2
1	M	NC
2	N	M
3	1Q	N
4	2Q	1Q
5	3Q	2Q
6	4Q	NC
7	CLOCK	3Q
8	GND	4Q
9	$\overline{G}$ 1	CLOCK
10	$\overline{G}$ 2	GND
11	4D	NC
12	3D	$\overline{G}$ 1
13	2D	$\overline{G}$ 2
14	1D	4D
15	CLEAR	3D
16	V_{CC}	NC
17		2D
18		1D
19		CLEAR
20		V_{CC}

FIGURE 1. Terminal connections.

DEVISE TYPE 01

LOGIC DIAGRAM

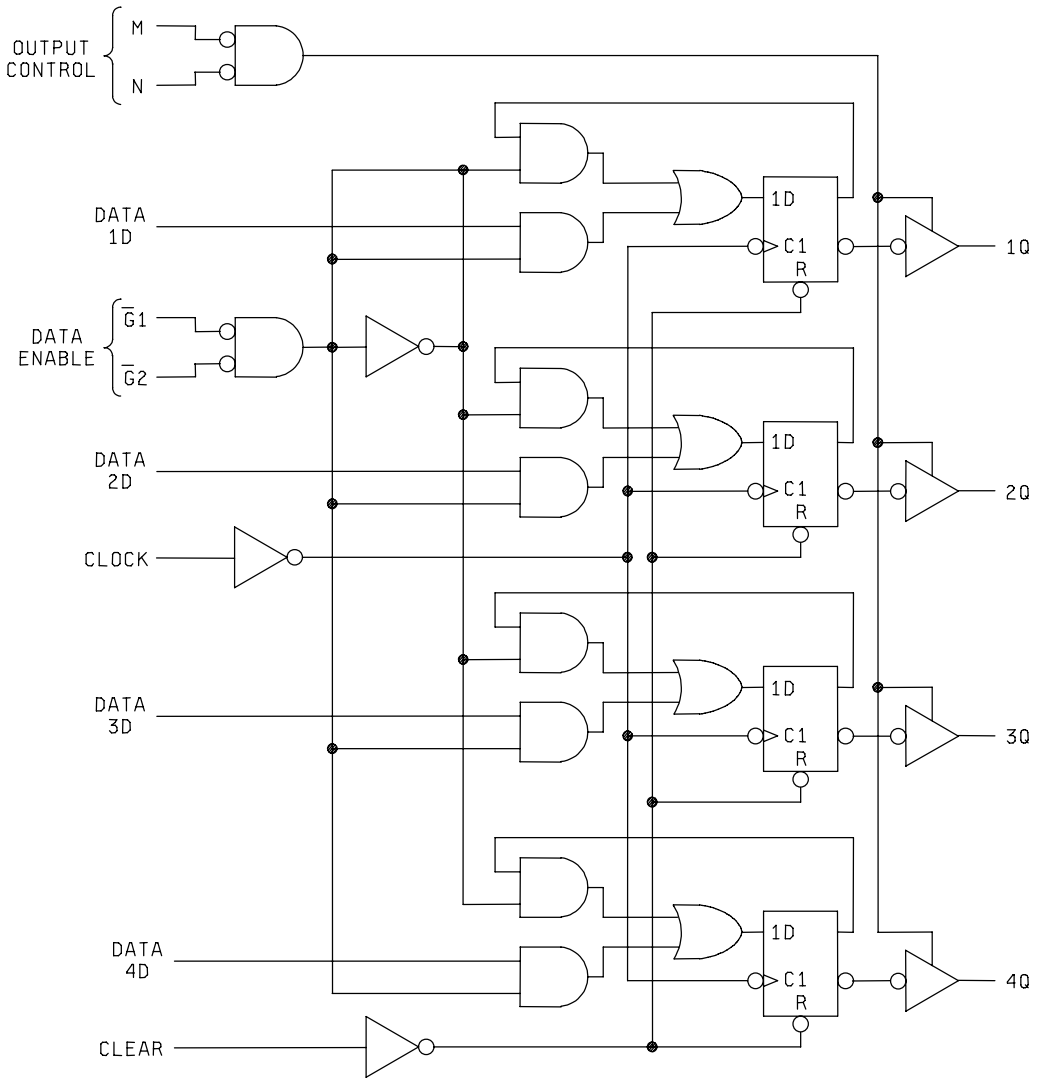

FIGURE 2. Logic diagram.

Device types 01

INPUTS					OUTPUT
CLEAR	CLOCK	DATA ENABLE		DATA	
		$\overline{G}$ 1	$\overline{G}$ 2	D	Q
H	X	X	X	X	L
L	L	X	X	X	Q0
L	↑	H	X	X	Q0
L	↑	X	H	X	Q0
L	↑	L	L	L	L
L	↑	L	L	H	H
When either M or N (or both) is (are) high the output is disabled to the high-impedance state; however sequential operation of the flip-flops is not affected.					

H = High logic level
L = Low logic level
X = Irrelevant

FIGURE 3. Truth table.

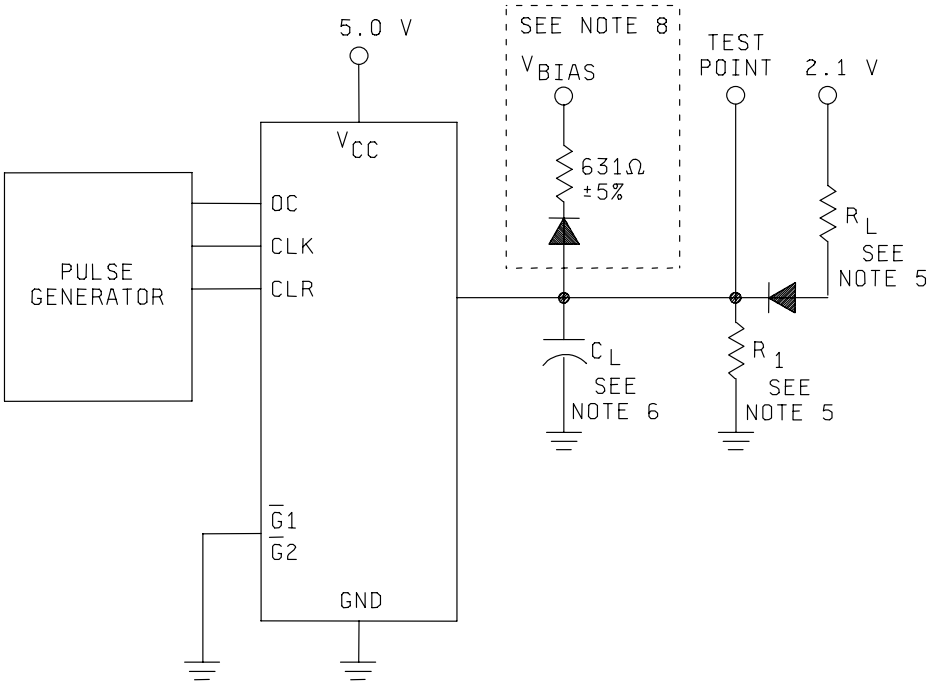

TEST CIRCUIT

NOTES:

1. The pulse generator has the following characteristics: V_{GEN} = 3 V; PRR ≤ 1 MHz, t_{TLH} ≤ 15 ns between 0.7 V and 2.7 V; t_{THL} ≤ 6 ns between 0.7 V and 2.7 V; Z_{OUT} ≈ 50 Ω.
2. Clear input pulse characteristics are as follows: $t_{P(CLR)}$ = 25 ns.
3. Clock input pulse characteristics are as follows: $t_{P(CLOCK)}$ = 25 ns.
4. Data input pulse characteristics are as follows: t_{SETUP} = 17 ns; t_{HOLD} = 7 ns.
5. R1 = 2.4 kΩ ±5 percent; R_L = 110 Ω ±5 percent.
6. C_L = 50 pF ±10% including scope probe, wiring and stray capacitance without package in test fixture.
7. All diodes are 1N3064 or equivalent.
8. The diode and resistor shown within the dotted area are optional. When the diode and resistor are used, V_{BIAS} shall be 5.5 V for all tests except for t_{PHZ}; for t_{PHZ} tests, V_{BIAS} shall be -0.6 V.

FIGURE 4. Switching time test circuit and waveforms.

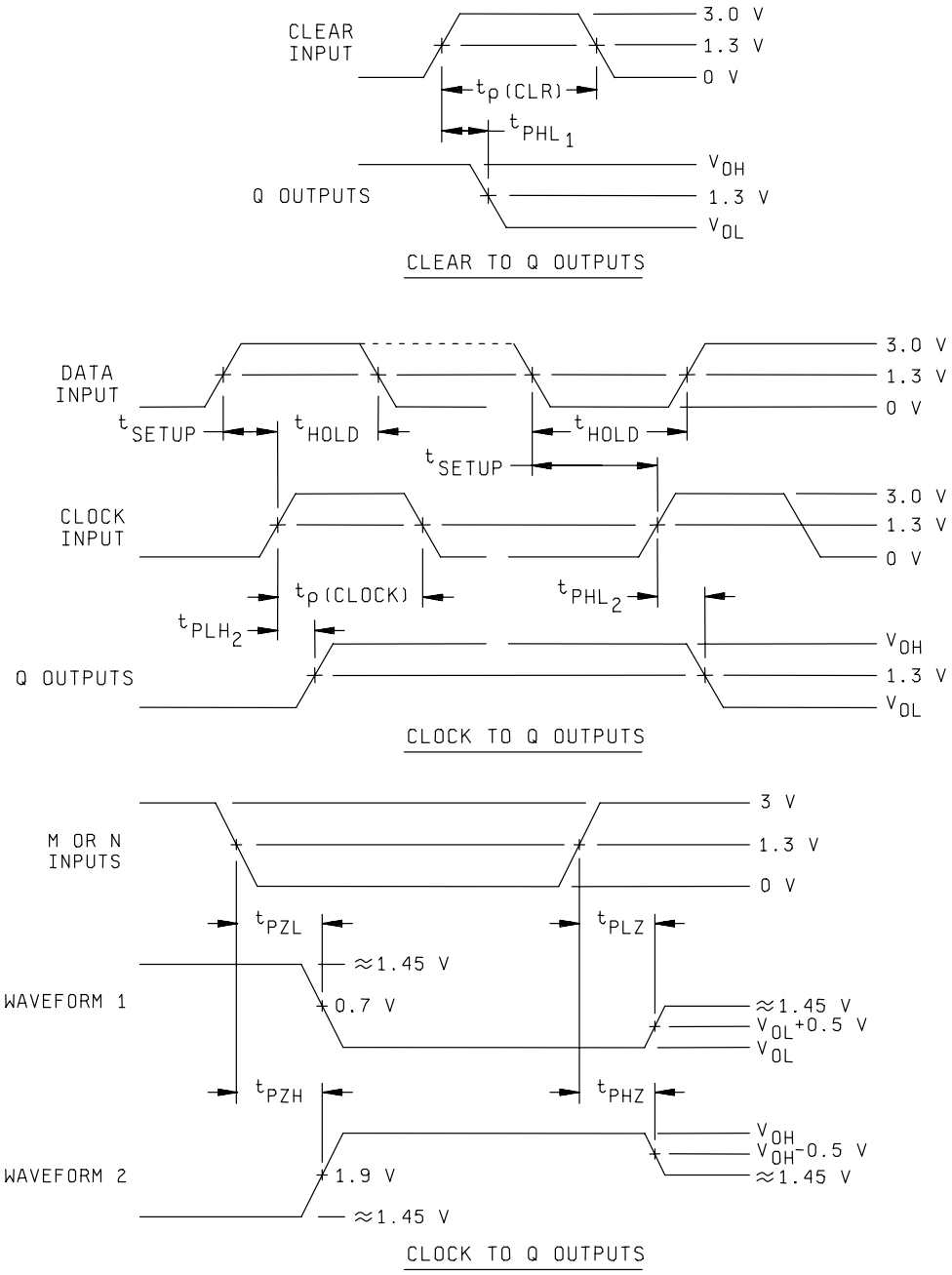

FIGURE 5. Switching time waveforms.

TABLE III. Group A inspection for device type 01.

Terminal conditions (pins not designated may be high ≥ 2.0 V; low ≤ 0.7 V; or open).

Subgroup	Symbol	MIL-STD-883 method	Cases E, F	1	2	3	4	5	6	7	8	9	10	11	12	13	14	15	16	Measured terminal	Limits		Unit
			Cases X, 2 1/	2	3	4	5	7	8	9	10	12	13	14	15	17	18	19	20				
			Test no.	M	N	1Q	2Q	3Q	4Q	CLK	GND	$\overline{G}$ 1	$\overline{G}$ 2	4D	3D	2D	1D	CLR	V_{CC}		Min	Max	
1 Tc = 25°C	V_{OH}	3006	1	0.7 V	0.7 V	-1 mA				2/	GND	0.7 V	0.7 V				2.0 V	0.7 V	4.5 V	1Q	2.4		V
		"	2	"	"		-1 mA			"	"	"	"			2.0 V		"	"	2Q	"		"
		"	3	"	"			-1 mA		"	"	"	"		2.0 V			"	"	3Q	"		"
		"	4	"	"				-1 mA	"	"	"	"	2.0 V				"	"	4Q	"		"
V	$_{OL}$	3007	5	"	"	12 mA				"	"	"	"				0.7 V	"	"	1Q		0.4	"
		"	6	"	"		12 mA			"	"	"	"			0.7 V		"	"	2Q		"	"
		"	7	"	"			12 mA		"	"	"	"		0.7 V			"	"	3Q		"	"
		"	8	"	"				12 mA	"	"	"	"	0.7 V				"	"	4Q		"	"
V	$_{IC}$		9	-18 mA							"								"	M		-1.5	"
			10		-18 mA						"								"	N		"	"
			11							-18 mA	"								"	CLK		"	"
			12								"	-18 mA							"	$\overline{G}$ 1		"	"
			13								"		-18 mA						"	$\overline{G}$ 2		"	"
			14								"			-18 mA					"	4D		"	"
			15								"				-18 mA				"	3D		"	"
			16								"					-18 mA			"	2D		"	"
			17								"						-18 mA		"	1D		"	"
			18								"							-18 mA	"	CLR		"	"
I	$_{IL}$	3009	19	0.4 V							"								5.5V	M	3/	3/	µA
		"	20		0.4 V						"								"	N	"	"	"
		"	21							0.4 V	"								"	CLK	"	"	"
		"	22								"	0.4 V							"	$\overline{G}$ 1	"	"	"
		"	23								"		0.4 V						"	$\overline{G}$ 2	"	"	"
		"	24								"			0.4 V					"	4D	"	"	"
		"	25								"				0.4 V				"	3D	"	"	"
		"	26								"					0.4 V			"	2D	"	"	"
		"	27								"						0.4 V		"	1D	"	"	"
		"	28								"							0.4 V	"	CLR		"	"
I	$_{IH1}$	3010	29	2.7 V							"								"	M		20	"
		"	30		2.7 V						"								"	N		"	"
		"	31							2.7 V	"								"	CLK		"	"
		"	32								"	2.7 V							"	$\overline{G}$ 1		"	"
		"	33								"		2.7 V						"	$\overline{G}$ 2		"	"
		"	34								"			2.7 V					"	4D		"	"
		"	35								"				2.7 V				"	3D		"	"
		"	36								"					2.7 V			"	2D		"	"
			37								"						2.7 V		"	1D		"	"
			38								"							2.7 V	"	CLR		"	"
I	$_{IH2}$	"	39	5.5 V							"								"	M		100	"
		"	40		5.5 V						"								"	N		"	"
		"	41							5.5 V	"								"	CLK		"	"
		"	42								"	5.5 V							"	$\overline{G}$ 1		"	"
		"	43								"		5.5 V						"	$\overline{G}$ 2		"	"
		"	44								"			5.5 V					"	4D		"	"
		"	45								"				5.5 V				"	3D		"	"
		"	46								"					5.5 V			"	2D		"	"
		"	47								"						5.5 V		"	1D		"	"
		"	48								"							5.5 V	"	CLR		"	"
I	$_{OZL}$		49	2.0 V	2.0 V	0.4 V				2/	"						2.0 V	0.7 V	"	1Q		-20	"
			50	20 V	2.0 V		0.4 V			2/	"					2.0 V		0.7 V	"	2Q		-20	"

See footnotes at end of table.

TABLE III. Group A inspection for device type 01 - Continued.

Terminal conditions (pins not designated may be high ≥ 2.0 V; low ≤ 0.7 V; or open).

Subgroup	Symbol	MIL-STD-883 method	Cases E, F	1	2	3	4	5	6	7	8	9	10	11	12	13	14	15	16	Measured terminal	Limits		Unit
			Cases X, 2 1/	2	3	4	5	7	8	9	10	12	13	14	15	17	18	19	20				
			Test no.	M	N	1Q	2Q	3Q	4Q	CLK	GND	$\overline{G}$ 1	$\overline{G}$ 2	4D	3D	2D	1D	CLR	V_{CC}		Min	Max	
1	I_{OZL}		51	2.0 V	2.0 V			0.4 V		2/	GND	GND	GND		2.0 V			0.7 V	5.5 V	3Q		-20	µA
Tc = 25°C			52	"	"				0.4 V	"	"	"	"	2.0 V				"	"	4Q		-20	"
	OZH		53	"	"	2.7 V				"	"	"	"				0.7 V	"	"	1Q		20	"
			54	"	"		2.7 V			"	"	"	"			0.7 V		"	"	2Q		"	"
			55	"	"			2.7 V		"	"	"	"		0.7 V			"	"	3Q		"	"
			56	"	"				2.7 V	"	"	"	"	0.7 V				"	"	4Q		"	"
	OS	3011	57	GND	GND	GND				"	"	"	"				5.5 V	GND	"	1Q	-30	-130	mA
		"	58	"	"		GND			"	"	"	"			5.5 V		"	"	2Q	"	"	"
		"	59	"	"			GND		"	"	"	"		5.5 V			"	"	3Q	"	"	"
		"	60	"	"				GND	"	"	"	"	5.5 V				"	"	4Q	"	"	"
	CC	3005	61	4.5 V	"					4.5 V	"	"	"	GND	GND	GND	GND	4/	"	V_{CC}		30	"
2	Same tests, terminal conditions, and limits as subgroup 1, except T_C = +125°C and V_{IC} tests are omitted.																						
3	Same tests, terminal conditions, and limits as subgroup 1, except T_C = -55°C and V_{IC} tests are omitted.																						
7	Truth	3014	62	B	B	L	L	L	L	B	GND	B	B	B	B	B	B	A	4.5 V	6/			
Tc = 25°C	table	"	63	"	"	L	L	L	L	B	"	"	"	A	A	A	A	B	"	"			
	test	"	64	"	"	H	H	H	H	A	"	"	"	A	A	A	A	"	"	"			
	5 _/	"	65	"	"	"	"	"	"	B	"	A	A	B	B	B	B	"	"	"			
		"	66	"	"	"	"	"	"	A	"	A	A	"	"	"	"	"	"	"			
		"	67	"	"	"	"	"	"	B	"	B	B	"	"	"	"	"	"	"			
		"	68	"	"	L	L	L	L	A	"	B	B	"	"	"	"	"	"	"			
		"	69	"	"	"	"	"	"	B	"	A	A	A	A	A	A	"	"	"			
		"	70	"	"	"	"	"	"	A	"	"	"	"	"	"	"	"	"	"			
		"	71	"	"	"	"	"	"	B	"	"	"	"	"	"	"	"	"	"			
8	Same tests and terminal conditions as subgroup 7, except Tc = 125°C and -55°C.																						
9	f_{MAX}	3003	72	GND	GND	OUT				IN	GND	GND	GND				IN	GND	5.0 V	1Q	20		MHz
Tc = 25°C	7/	Fig. 5	73	"	"		OUT			"	"	"	"			IN		"	"	2Q	"		"
		"	74	"	"			OUT		"	"	"	"		IN			"	"	3Q	"		"
		"	75	"	"				OUT	"	"	"	"	IN				"	"	4Q	"		"
t	PHL1	"	76	"	"	OUT				2/	"	"	"				4.5 V	IN	"	CLR to 1Q	7	35	ns
		"	77	"	"		OUT			"	"	"	"			4.5 V		"	"	CLR to 2Q	"	"	"
		"	78	"	"			OUT		"	"	"	"		4.5 V			"	"	CLR to 3Q	"	"	"
		"	79	"	"				OUT	"	"	"	"	4.5 V				"	"	CLR to 4Q	"	"	"
t	PLH2	"	80	"	"	OUT				IN	"	"	"				IN	4/	"	CLK to 1Q	"	25	"
		"	81	"	"		OUT			"	"	"	"			IN		"	"	CLK to 2Q	"	"	"
		"	82	"	"			OUT		"	"	"	"		IN			"	"	CLK to 3Q	"	"	"
		"	83	"	"				OUT	"	"	"	"	IN				"	"	CLK to 4Q	"	"	"
t	PHL2	"	84	"	"	OUT				"	"	"	"				IN	GND	"	CLK to 1Q	"	30	"
		"	85	"	"		OUT			"	"	"	"			IN		"	"	CLK to 2Q	"	"	"
		"	86	"	"			OUT		"	"	"	"		IN			"	"	CLK to 3Q	"	"	"
		"	87	"	"				OUT	"	"	"	"	IN				"	"	CLK to 4Q	"	"	"
t	PZH	"	88	IN	GND	OUT				2/	"	"	"				4.5 V	"	"	M to 1Q	2	26	"
		"	89	"	"		OUT			"	"	"	"			4.5 V		"	"	M to 2Q	"	"	"
		"	90	"	"			OUT		"	"	"	"		4.5 V			"	"	M to 3Q	"	"	"
		"	91	"	"				OUT	"	"	"	"	4.5 V				"	"	M to 4Q	"	"	"
		"	92	GND	IN	OUT				"	"	"	"				4.5 V	"	"	N to 1Q	"	"	"
		"	93	"	"		OUT			"	"	"	"			4.5 V		"	"	N to 2Q	"	"	"
		"	94	"	"			OUT		"	"	"	"		4.5 V			"	"	N to 3Q	"	"	"
		"	95	"	"				OUT	"	"	"	"	4.5 V				"	"	N to 4Q	"	"	"

See footnotes at end of table.

TABLE III. Group A inspection for device type 01 - Continued.
Terminal conditions (pins not designated may be high ≥ 2.0 V; low ≤ 0.7 V; or open).

Subgroup	Symbol	MIL-STD-883 method	Cases E, F	1	2	3	4	5	6	7	8	9	10	11	12	13	14	15	16	Measured terminal	Limits		Unit
			Cases X, 2 1/	2	3	4	5	7	8	9	10	12	13	14	15	17	18	19	20				
			Test no.	M	N	1Q	2Q	3Q	4Q	CLK	GND	$\overline{G}$ 1	$\overline{G}$ 2	4D	3D	2D	1D	CLR	V_{CC}		Min	Max	
9 Tc = 25°C	t_{PZL}	3003 Fig. 5	96	IN	GND	OUT				2/	GND	GND	GND				GND	GND	5.0 V	M to 1Q	2	27	ns
		"	97	"	"		OUT			"	"	"	"			GND		"	"	M to 2Q	"	"	"
		"	98	"	"			OUT		"	"	"	"		GND			"	"	M to 3Q	"	"	"
		"	99	"	"				OUT	"	"	"	"	GND				"	"	M to 4Q	"	"	"
		"	100	GND	IN	OUT				"	"	"	"				GND	"	"	N to 1Q	"	"	"
		"	101	"	"		OUT			"	"	"	"			GND		"	"	N to 2Q	"	"	"
		"	102	"	"			OUT		"	"	"	"		GND			"	"	N to 3Q	"	"	"
		"	103	"	"				OUT	"	"	"	"	GND				"	"	N to 4Q	"	"	"
t	PHZ	"	104	IN	GND	OUT				"	"	"	"				4.5 V	"	"	M to 1Q	"	22	"
		"	105	"	"		OUT			"	"	"	"			4.5 V		"	"	M to 2Q	"	"	"
		"	106	"	"			OUT		"	"	"	"		4.5 V			"	"	M to 3Q	"	"	"
		"	107	"	"				OUT	"	"	"	"	4.5 V				"	"	M to 4Q	"	"	"
		"	108	GND	IN	OUT				"	"	"	"				4.5 V	"	"	N to 1Q	"	"	"
		"	109	"	"		OUT			"	"	"	"			4.5 V		"	"	N to 2Q	"	"	"
		"	110	"	"			OUT		"	"	"	"		4.5 V			"	"	N to 3Q	"	"	"
		"	111	"	"				OUT	"	"	"	"	4.5 V				"	"	N to 4Q	"	"	"
t	PLZ	"	112	IN	GND	OUT				"	"	"	"				GND	"	"	M to 1Q	"	"	"
		"	113	"	"		OUT			"	"	"	"			GND		"	"	M to 2Q	"	"	"
		"	114	"	"			OUT		"	"	"	"		GND			"	"	M to 3Q	"	"	"
		"	115	"	"				OUT	"	"	"	"	GND				"	"	M to 4Q	"	"	"
		"	116	GND	IN	OUT				"	"	"	"				GND	"	"	N to 1Q	"	"	"
		"	117	"	"		OUT			"	"	"	"			GND		"	"	N to 2Q	"	"	"
		"	118	"	"			OUT		"	"	"	"		GND			"	"	N to 3Q	"	"	"
		"	119	"	"				OUT	"	"	"	"	GND				"	"	N to 4Q	"	"	"
10	f_{MAX}	Same tests and terminal conditions as subgroup 9, except T_C = +125°C.																			20		MHz
t	PHL1																				7	46	ns
t	PLH2																				"	33	"
t	PHL2																				"	39	"
t	PZH																				2	34	"
t	PZL																				"	35	"
t	PHZ																				"	29	"
t	PLZ																				"	29	"
11	Same tests, terminal conditions, and limits as subgroup 10, except Tc = -55°C.																						

1/ Pins not referenced are N/C.
2/ Apply one clock pulse prior to test; 2.5 V minimum to 5.5 V maximum, 0 V

3/ I_{IL} min/max values (µA) for circuits shown:

Measured terminal	A	B	C
M, N, $\overline{G}$ 1, $\overline{G}$ 2, CLR	-120/-360	-120/-380	-120/-380
4D, 3D, 2D, 1D	-120/-360	-150/-380	-120/-380
CLK			-30/-300

4/ Apply one clear pulse prior to test; 4.5 V, 0 V

5/ A = 3.0 V minimum; B = 0.0 V or GND.
6/ H > 1.5 V; L < 1.5 V.
7/ The f_{MAX} minimum limit specified is the frequency of the clock input pulse. The output frequency shall be one half the clock input frequency. The D input shall be one half of the frequency of the clock and the D ↑ and ↓ shall be nominally coincident with the clock ↓ but may be offset sufficiently to assure adequate t_{SETUP} and t_{HOLD} (see 1.4).

5. PACKAGING

5.1 Packaging requirements. For acquisition purposes, the packaging requirements shall be as specified in the contract or order (see 6.2). When actual packaging of materiel is to be performed by DoD or in-house contractor personnel, these personnel need to contact the responsible packaging activity to ascertain packaging requirements. Packaging requirements are maintained by the Inventory Control Point's packaging activity within the Military Service or Defense Agency, or within the military service's system command. Packaging data retrieval is available from the managing Military Department's or Defense Agency's automated packaging files, CD-ROM products, or by contacting the responsible packaging activity.

6. NOTES

6.1 Intended use. Microcircuits conforming to this specification are intended for original equipment design applications and logistic support of existing equipment.

6.2 Acquisition requirements. Acquisition documents should specify the following:

a. Title, number, and date of the specification.

b. PIN and compliance identifier, if applicable (see 1.2).

c. Requirements for delivery of one copy of the conformance inspection data pertinent to the device inspection lot to be supplied with each shipment by the device manufacturer, if applicable.

d. Requirements for certificate of compliance, if applicable.

e. Requirements for notification of change of product or process to contracting activity in addition to notification to the qualifying activity, if applicable.

f. Requirements for failure analysis (including required test condition of method 5003 of MIL-STD-883), corrective action, and reporting of results, if applicable.

g. Requirements for product assurance options.

h. Requirements for special carriers, lead lengths, or lead forming, if applicable. These requirements should not affect the part number. Unless otherwise specified, these requirements will not apply to direct purchase by or direct shipment to the Government.

i. Requirements for "JAN" marking.

j. Packaging requirements (see 5.1).

6.3 Superseding information. The requirements of MIL-M-38510 have been superseded to take advantage of the available Qualified Manufacturer Listing (QML) system provided by MIL-PRF-38535. Previous references to MIL-M-38510 in this document have been replaced by appropriate references to MIL-PRF-38535. All technical requirements now consist of this specification and MIL-PRF-38535. The MIL-M-38510 specification sheet number and PIN have been retained to avoid adversely impacting existing government logistics systems and contractor's parts lists.

6.4 Qualification. With respect to products requiring qualification, awards will be made only for products which are, at the time of award of contract, qualified for inclusion in Qualified Manufacturers List QML-38535 whether or not such products have actually been so listed by that date. The attention of the contractors is called to these requirements, and manufacturers are urged to arrange to have the products that they propose to offer to the Federal Government tested for qualification in order that they may be eligible to be awarded contracts or purchase orders for the products covered by this specification. Information pertaining to qualification of products may be obtained from DSCC-VQ, 3990 E. Broad Street, Columbus, Ohio 43123-1199.

6.5 Abbreviations, symbols, and definitions. The abbreviations, symbols, and definitions used herein are defined in MIL-PRF-38535, MIL-HDBK-1331, and as follows:

GND ..... Ground zero voltage potential
I_{IN} ..... Current flowing into an input terminal
V_{IN} ..... Voltage level at an input terminal

6.6 Logistic support. Lead materials and finishes (see 3.4) are interchangeable. Unless otherwise specified, microcircuits acquired for Government logistic support will be acquired to device class B (see 1.2.2), lead material and finish A (see 3.4). Longer length leads and lead forming should not affect the part number.

6.7 Substitutability. The cross-reference information below is presented for the convenience of users. Microcircuits covered by this specification will functionally replace the listed generic-industry type. Generic-industry microcircuit types may not have equivalent operational performance characteristics across military temperature ranges or reliability factors equivalent to MIL-M-35810 device types and may have slight physical variations in relation to case size. The presence of this information should not be deemed as permitting substitution of generic-industry types for MIL-M-38510 types or as a waiver of any of the provisions of MIL-PRF-38535.

Military device type	Generic-industry type
01	54LS173A

6.8 Manufacturers' designation. Manufacturers' circuits which form a part of this specification are designated with an "X" as shown in table IV herein.

TABLE IV. Manufacturers' designations.

Device type	Circuit A	B	C
	Texas Instruments	Motorola Inc.	Signetics
01	X	X	X

6.9 Changes from previous issue. Marginal notations are not used in this revision to identify changes with respect to the previous issue due to the extensiveness of the changes.

Custodians:
Army - CR
Navy - EC
Air Force - 11
DLA - CC

Preparing activity:
DLA - CC

(Project 5962-2049)

Review activities:
Army - MI, SM
Navy - AS, CG, MC, SH, TD
Air Force - 03, 19, 99

NOTE: The activities listed above were interested in this document as of the date of this document. Since organizations and responsibilities can change, you should verify the currency of the information above using the ASSIST Online database at www.dodssp.daps.mil.