INCH-POUND

MIL-M-38510/339E
22 March 2011
SUPERSEDING
MIL-M-38510/339D
18 February 2004

MILITARY SPECIFICATION

MICROCIRCUITS, DIGITAL, BIPOLAR, ADVANCED SCHOTTKY TTL, DATA SELECTORS/MULTIPLEXERS WITH THREE-STATE OUTPUTS, MONOLITHIC SILICON

Reactivated after 18 February 2004 and may be used for either new or existing design acquisition.

This specification is approved for use by all Departments and Agencies of the Department of Defense.

The requirements for acquiring the product herein shall consist of this specification sheet and MIL-PRF 38535

1. SCOPE

1.1 Scope. This specification covers the detail requirements for monolithic silicon, advanced Schottky TTL, data selectors and multiplexers (three-state) microcircuits. Two product assurance classes and a choice of case outlines and lead finishes are provided for each type and are reflected in the complete part number. For this product, the requirements of MIL-M-38510 have been superseded by MIL-PRF-38535, (see 6.3).

1.2 Part or Identifying Number (PIN). The PIN is in accordance with MIL-PRF-38535, and as specified herein.

1.2.1 Device types. The device types are as follows:

Device type	Circuit
01	8 - input, data selector/multiplexer
02	Dual, 4 - input, data selector/multiplexer
03	Quad, 2 - input, data selector/multiplexer
04	Quad, 2 - input, data selector/multiplexer with inverted output
05	8 - input, data selector/multiplexer with 3 - state outputs
06	Quad, 2 - input, data selector/multiplexer with 3 - state outputs
07	Quad, 2 - input, data selector/multiplexer with 3 - state inverted output
08	Dual, 4 - input, data selector/multiplexer with 3 - state outputs
09	Dual, 4 - input, data selector/multiplexer with inverted outputs
10	Dual, 4 - input, data selector/multiplexer with 3 - state inverted outputs

1.2.2 Device class. The device class is the product assurance level as defined in MIL-PRF-38535.

1.2.3 Case outlines. The case outlines are as designated in MIL-STD-1835 and as follows:

Outline letter	Descriptive designator	Terminals	Package style
E	GDIP1-T16 or CDIP2-T16	16	Dual-in-line
F	GDFP2-F16 or CDFP3-F16	16	Flat pack
2	CQCC1-N20	20	Square leadless chip carrier

Comments, suggestions, or questions on this document should be addressed to: DLA Land and Maritime, ATTN: DLA Land and Maritime- VAS, P.O. Box 3990, Columbus, OH 43218-3990, or emailed to bipolar@dscc.dla.mil. Since contact information can change, you may want to verify the currency of this address information using the ASSIST Online database at https://assist.daps.dla.mil.

1.3 Absolute maximum ratings.

Supply voltage range ..... -0.5 V dc to +7.0 V dc
Input voltage range ..... -1.2 V dc at -18 mA to +7.0 V dc
Storage temperature range ..... -65° to +150°C
Maximum power dissipation, per device (P_D) 1/
Device type 01 ..... 116 mW
Device type 02 ..... 110 mW
Device type 03 ..... 127 mW
Device type 04 ..... 83 mW
Device type 05 ..... 132 mW
Device type 06 ..... 127 mW
Device type 07 ..... 127 mW
Device type 08 ..... 121 mW
Device type 09 ..... 110 mW
Device type 10 ..... 127 mW
Lead temperature (soldering, 10 seconds) ..... +300°C
Thermal resistance, junction to case (θ_{JC}):
Cases E, F, and 2 ..... (See MIL-STD-1835)
Junction temperature (T_J) 2/ ..... 175°C

1.4 Recommended operating conditions.

Supply voltage (V_{CC}) ..... 4.5 V minimum to 5.5 V maximum
Minimum high level input voltage (V_{IH}) ..... 2.0 V dc
Maximum low level input voltage (V_{IL}) ..... 0.8 V dc
Case operating temperature range (T_C) ..... -55° to +125°C

2. APPLICABLE DOCUMENTS

2.1 General. The documents listed in this section are specified in sections 3, 4, or 5 of this specification. This section does not include documents cited in other sections of this specification or recommended for additional information or as examples. While every effort has been made to ensure the completeness of this list, document users are cautioned that they must meet all specified requirements of documents cited in sections 3, 4, or 5 of this specification, whether or not they are listed.

2.2 Government documents.

2.2.1 Specifications and Standards. The following specifications and standards form a part of this specification to the extent specified herein. Unless otherwise specified, the issues of these documents are those cited in the solicitation or contract.

DEPARTMENT OF DEFENSE SPECIFICATIONS

MIL-PRF-38535 - Integrated Circuits (Microcircuits) Manufacturing, General Specification for.

DEPARTMENT OF DEFENSE STANDARDS

MIL-STD-883 - Test Method Standard for Microelectronics.
MIL-STD-1835 - Interface Standard Electronic Component Case Outlines

(Copies of these documents are available online at https://assist.daps.dla.mil/quicksearch/ or from the Standardization Document Order Desk, 700 Robbins Avenue, Building 4D, Philadelphia, PA 19111-5094.)

1/ Must withstand the added P_D due to short-circuit test (e.g., I_{OS}).
2/ Maximum junction temperature shall not be exceeded except in accordance with allowable short duration burn-in screening condition in accordance with MIL-PRF-38535.

2.3 Order of precedence. In the event of a conflict between the text of this specification and the references cited herein, the text of this document takes precedence. Nothing in this document, however, supersedes applicable laws and regulations unless a specific exemption has been obtained.

3. REQUIREMENTS

3.1 Qualification. Microcircuits furnished under this specification shall be products that are manufactured by a manufacturer authorized by the qualifying activity for listing on the applicable qualified manufacturers list before contract award (see 4.3 and 6.4).

3.2 Item requirements. The individual item requirements shall be in accordance with MIL-PRF-38535 and as specified herein or as modified in the device manufacturer's Quality Management (QM) plan. The modification in the QM plan shall not affect the form, fit, or function as described herein.

3.3 Design, construction, and physical dimensions. The design, construction, and physical dimensions shall be as specified in MIL-PRF-38535 and herein.

3.3.1 Terminal connections and pin assignments. The terminal connections and pin assignments shall be as specified on figure 1.

3.3.2 Logic diagrams. The logic diagrams shall be as specified on figure 2.

3.3.3 Truth tables. The truth tables shall be as specified on figure 3.

3.3.4 Schematic circuits. The schematic circuits shall be maintained by the manufacturer and made available to the qualifying activity and the preparing activity upon request.

3.3.5 Case outlines. The case outlines shall be as specified in 1.2.3.

3.4 Lead material and finish. The lead material and finish shall be in accordance with MIL-PRF-38535 (see 6.6).

3.5 Electrical performance characteristics. The electrical performance characteristics are as specified in table I, and apply over the full recommended case operating temperature range, unless otherwise specified.

3.6 Electrical test requirements. The electrical test requirements for each device class shall be the subgroups specified in table II. The electrical tests for each subgroup are described in table III.

3.7 Marking. Marking shall be in accordance with MIL-PRF-38535.

3.8 Microcircuit group assignment. The devices covered by this specification shall be in microcircuit group number 11 (see MIL-PRF-38535, appendix A).

4. VERIFICATION

4.1 Sampling and inspection. Sampling and inspection procedures shall be in accordance with MIL-PRF-38535 or as modified in the device manufacturer's Quality Management (QM) plan. The modification in the QM plan shall not effect the form, fit, or function as described herein.

4.2 Screening. Screening shall be in accordance with MIL-PRF-38535 and shall be conducted on all devices prior to qualification and quality conformance inspection. The following additional criteria shall apply:

a. The burn-in test duration, test condition, and test temperature, or approved alternatives shall be as specified in the device manufacturer's QM plan in accordance with MIL-PRF-38535. The burn-in test circuit shall be maintained under document control by the device manufacturer's Technology Review Board (TRB) in accordance with MIL-PRF-38535 and shall be made available to the acquiring or preparing activity upon request. The test circuit shall specify the inputs, outputs, biases, and power dissipation, as applicable, in accordance with the intent specified in test method 1015 of MIL-STD-883.

b. Interim and final electrical test parameters shall be as specified in table II, except interim electrical parameters test prior to burn-in is optional at the discretion of the manufacturer.

c. Additional screening for space level product shall be as specified in MIL-PRF-38535.

4.3 Qualification inspection. Qualification inspection shall be in accordance with MIL-PRF-38535.

4.4 Technology Conformance inspection (TCI). Technology conformance inspection shall be in accordance with MIL-PRF-38535 and herein for groups A, B, C, and D inspections (see 4.4.1 through 4.4.4).

4.4.1 Group A inspection. Group A inspection shall be in accordance with table III of MIL-PRF-38535 and as follows:

a. Tests shall be as specified in table II herein.

b. Subgroups 4, 5, and 6 shall be omitted.

4.4.2 Group B inspection. Group B inspection shall be in accordance with table II of MIL-PRF-38535.

4.4.3 Group C inspection. Group C inspection shall be in accordance with table IV of MIL-PRF-38535 and as follows:

a. End-point electrical parameters shall be as specified in table II herein.

b. The steady-state life test duration, test condition, and test temperature, or approved alternatives shall be as specified in the device manufacturer's QM plan in accordance with MIL-PRF-38535. The burn-in test circuit shall be maintained under document control by the device manufacturer's Technology Review Board (TRB) in accordance with MIL-PRF-38535 and shall be made available to the acquiring or preparing activity upon request. The test circuit shall specify the inputs, outputs, biases, and power dissipation, as applicable, in accordance with the intent specified in test method 1005 of MIL-STD-883.

4.4.4 Group D inspection. Group D inspection shall be in accordance with table V of MIL-PRF-38535. End-point electrical parameters shall be as specified in table II herein.

4.5 Methods of inspection. Methods of inspection shall be specified as follows:

4.5.1 Voltage and current. All voltages given are referenced to the microcircuit ground terminal. Currents given are conventional and positive when flowing into the referenced terminal.

TABLE I. Electrical performance characteristics.

Test	Symbol	Conditions $-55°C \le T_C \le +125°C$		Device type	Limits Min	Limits Max	Unit
High level output voltage	V_{OH}	V_{CC} = 4.5 V, V_{IL} = 0.8 V, V_{IH} = 2.0 V	I_{OH} = -1.0 mA	01, 02, 03, 04, 09	2.5		V
			I_{OH} = -3.0 mA	05, 06, 07, 08, 10	2.4		V
Low level output voltage	V_{OL}	V_{CC} = 4.5 V, I_{OL} = 20 mA, V_{IH} = 2.0 V, V_{IL} = 0.8 V		All		0.5	V
Input clamp voltage	V_{IC}	V_{CC} = 4.5 V, I_{IN} = -18 mA, T_C = +25°C		All		-1.2	V
High level input current	I_{IH1}	V_{CC} = 5.5 V, V_{IH} = 2.7 V		All		20	µA
	I_{IH2}	V_{CC} = 5.5 V, V_{IH} = 7.0 V		All		100	µA
Low level input current	I_{IL}	V_{CC} = 5.5 V, V_{IL} = 0.5 V		All	-.03	-.60	mA
Short circuit output current 1/	I_{OS}	V_{CC} = 5.5 V, V_{OS} = 0 V		All	-60	-150	mA
Output drive	I_{OD}	V_{CC} = 4.5 V,		01, 04, 09	60		mA
				02, 03, 05, 06, 07, 08, 10	35		mA
Supply current	I_{CC}	V_{CC} = 5.5 V, V_{OS} = 0 V		01		21	mA
				02		20	mA
				03		23	mA
				04		15	mA
				05		22	mA
High level supply current	I_{CCH}	V_{CC} = 5.5 V		06		15	mA
				07		9.5	mA
				08		16	mA
				09		14	mA
				10		14	mA
Low level supply current	I_{CCL}	V_{CC} = 5.5 V		06		22	mA
				07		23	mA
				08		23	mA
				09		20	mA
				10		20	mA

1/ Not more than one output should be shorted at a time.

TABLE I. Electrical performance characteristics - Continued.

Test	Symbol	Conditions $-55°C \le T_C \le +125°C$	Device type	Limits Min	Limits Max	Unit
Off state supply current	I_{CCZ}	V_{CC} = 5.5 V Outputs disabled	05		24	mA
			06		23	mA
			07		17	mA
			08		23	mA
			10		23	mA
Off state output leakage cuurent	I_{OZH}	V_{CC} = 5.5 V, V_{ZH} = 2.7 V	05, 06, 07, 08, 10		50	µA
	I_{OZL}	V_{CC} = 5.5 V, V_{ZL} = 0.5 V			-50	µA
Propagation delay time, low to high level, data to Z output	t_{PLH1}	V_{CC} = 5.5 V (see figure 4)	01	2.5	8.5	ns
			02	2.5	9.0	ns
			03	2.5	7.5	ns
			05	2.5	9.0	ns
			06	2.0	7.0	ns
			08	2.5	9.0	ns
Propagation delay time, low to high level, data to $\overline{Z}$ output	t_{PLH2}		01	2.5	7.5	ns
			04	2.5	8.5	ns
			05	2.5	8.5	ns
			07	2.0	7.5	ns
			09	2.0	9.0	ns
			10	1.5	9.0	ns
Propagation delay time, low to high level, select to Z output	t_{PLH3}		01	4.5	13.5	ns
			02	4.5	14.0	ns
			03	4.0	12.0	ns
			05	3.5	14.0	ns
			06	3.5	11.5	ns
			08	3.5	15.0	ns
Propagation delay time, low to high level, select to $\overline{Z}$ output	t_{PLH4}		01	3.5	11.5	ns
			04	3.0	10.5	ns
			05	3.5	11.5	ns
			07	3.0	9.5	ns
			09	3.5	14.5	ns
			10	4.0	16.0	ns
Propagation delay time, low to high level, enable to Z output	t_{PLH5}		01	4.0	12.0	ns
			02	4.5	11.5	ns
			03	5.0	13.0	ns
Propagation delay time, low to high level, enable to $\overline{Z}$ output	t_{PLH6}		01	3.0	7.5	ns
			04	2.5	8.0	ns
			09	3.5	17.0	ns

TABLE I. Electrical performance characteristics - Continued.

Test	Symbol	Conditions $-55°C \le T_C \le +125°C$	Device type	Limits Min	Limits Max	Unit
Propagation delay time, high to low level, data to Z output	t_{PHL1}	V_{CC} = 5.5 V (see figure 4)	01	3.5	9.0	ns
			02	2.5	8.0	ns
			03	1.5	7.5	ns
			05	3.5	9.0	ns
			06	1.5	7.0	ns
			08	2.5	8.0	ns
Propagation delay time, high to low level, data to $\overline{Z}$ output	t_{PHL2}		01	1.5	6.0	ns
			04	1.5	5.0	ns
			05	1.0	6.0	ns
			07	1.0	6.0	ns
			09	1.5	7.5	ns
			10	1.5	7.5	ns
Propagation delay time, high to low level, select to Z output	t_{PHL3}		01	4.0	9.5	ns
			02	3.5	11.0	ns
			03	3.0	9.0	ns
			05	3.0	10.5	ns
			06	2.5	9.0	ns
			08	2.5	11.0	ns
Propagation delay time, high to low level, select to $\overline{Z}$ output	t_{PHL4}		01	3.0	8.0	ns
			04	2.5	8.0	ns
			05	3.2	8.0	ns
			07	2.5	9.0	ns
			09	3.5	15.0	ns
			10	4.0	14.0	ns
Propagation delay time, high to low level, enable to Z output	t_{PHL5}		01	3.0	8.0	ns
			02	2.5	9.0	ns
			03	2.5	7.5	ns
Propagation delay time, high to low level, enable to $\overline{Z}$ output	t_{PHL6}		01	2.5	6.5	ns
			04	2.0	8.5	ns
			09	3.0	13.0	ns
Propagation delay time, low level to off state, output enable to Z output	t_{PLZ5}		05	1.0	5.5	ns
			06	2.0	8.5	ns
			08	2.0	8.0	ns
Propagation delay time, low level to off state, output enable to $\overline{Z}$ output	t_{PLZ6}		05	1.0	5.0	ns
			07	2.0	8.5	ns
			10	2.0	8.5	ns

TABLE I. Electrical performance characteristics - Continued.

Test	Symbol	Conditions $-55°C \le T_C \le +125°C$	Device type	Limits Min	Limits Max	Unit
Propagation delay time, high level to off state, output enable to Z output	t_{PHZ5}	V_{CC} = 5.5 V (see figure 4)	05	2.0	5.5	ns
			06	2.0	7.0	ns
			08	2.0	6.5	ns
Propagation delay time, high level to off state, output enable to $\overline{Z}$ output	t_{PHZ6}		05	2.0	6.0	ns
			07	1.5	7.0	ns
			10	2.0	6.5	ns
Propagation delay time, off state to low level output enable to Z output	t_{PZL5}		05	2.5	9.0	ns
			06	2.5	9.0	ns
			08	2.5	10.0	ns
Propagation delay time, off state to low level output enable to $\overline{Z}$ output	t_{PZL6}		05	2.5	7.5	ns
			07	2.5	9.0	ns
			10	3.0	15.5	ns
Propagation delay time, off state to high level output enable to Z output	t_{PZH5}		05	3.0	8.5	ns
			06	2.0	8.0	ns
			08	2.5	10.0	ns
Propagation delay time, off state to high level output enable to $\overline{Z}$ output	t_{PZH6}		05	2.0	7.0	ns
			07	2.0	8.0	ns
			10	3.0	11.0	ns

TABLE II. Electrical test requirements.

MIL-PRF-38535 test requirements	Subgroups (see table III) Class S devices	Class B devices
Interim electrical parameters	1	1
Final electrical test parameters	1*, 2, 3, 7, 9, 10, 11	1*, 2, 3, 7, 9
Group A test requirements	1, 2, 3, 7, 8, 9, 10, 11	1, 2, 3, 7, 8, 9, 10, 11
Group B electrical test parameters when using the method 5005 QCI option	1, 2, 3, 7, 8, 9, 10, 11	N/A
Group C end-point electrical parameters	1, 2, 3, 7, 8, 9, 10, 11	1, 2, 3
Group D end-point electrical parameters	1, 2, 3	1, 2, 3

*PDA applies to subgroup 1.

Terminal number	Terminal assignments									
	Device type 01		Device type 02		Device type 03		Device type 04		Device type 05	
	Cases E and F	Case 2	Cases E and F	Case 2	Cases E and F	Case 2	Cases E and F	Case 2	Cases E and F	Case 2
1	I3	N/C	$\overline{E}$ a	N/C	S	N/C	S	N/C	I3	N/C
2	I2	I3	S1	$\overline{E}$ a	I0a	S	I0a	S	I2	I3
3	I1	I2	I3a	S1	I1a	I0a	I1a	I0a	I1	I2
4	I0	I1	I2a	I3a	Za	I1a	$\overline{Z}$ a	I1a	I0	I1
5	Z	I0	I1a	I2a	I0b	Za	I0b	$\overline{Z}$ a	Z	I0
6	$\overline{Z}$	N/C	I0a	N/C	I1b	N/C	I1b	N/C	$\overline{Z}$	N/C
7	$\overline{E}$	Z	Za	I1a	Zb	I0b	$\overline{Z}$ b	I0b	$\overline{QE}$	Z
8	GND	$\overline{Z}$	GND	I0a	GND	I1b	GND	I1b	GND	$\overline{Z}$
9	S2	$\overline{E}$	Zb	Za	Zd	Zb	$\overline{Z}$ d	$\overline{Z}$ b	S2	$\overline{QE}$
10	S1	GND	I0b	GND	I1d	GND	I1d	GND	S1	GND
11	S0	N/C	I1b	N/C	I0d	N/C	I0d	N/C	S0	N/C
12	I7	S2	I2b	Zb	Zc	Zd	$\overline{Z}$ c	$\overline{Z}$ d	I7	S2
13	I6	S1	I3b	I0b	I1c	I1d	I1c	I1d	I6	S1
14	I5	S0	S0	I1b	I0c	I0d	I0c	I0d	I5	S0
15	I4	I7	$\overline{E}$ b	I2b	$\overline{E}$	Zc	$\overline{E}$	$\overline{Z}$ c	I4	I7
16	V_{CC}	N/C	V_{CC}	N/C	V_{CC}	N/C	V_{CC}	N/C	V_{CC}	N/C
17		I6		I3b		I1c		I1c		I6
18		I5		S0		I0c		I0c		I5
19		I4		$\overline{E}$ b		$\overline{E}$		$\overline{E}$		I4
20		V_{CC}		V_{CC}		V_{CC}		V_{CC}		V_{CC}

FIGURE 1. Terminal connections.

Terminal number	Terminal assignments									
	Device type 06		Device type 07		Device type 08		Device type 09		Device type 10	
	Cases E and F	Case 2	Cases E and F	Case 2	Cases E and F	Case 2	Cases E and F	Case 2	Cases E and F	Case 2
1	S	N/C	S	N/C	$\overline{OE}$ a	N/C	$\overline{E}$ a	N/C	$\overline{OE}$ a	N/C
2	I0a	S	I0a	S	S1	$\overline{OE}$ a	S1	$\overline{E}$ a	S1	$\overline{OE}$ a
3	I1a	I0a	I1a	I0a	I3a	S1	I3a	S1	I3a	S1
4	Za	I1a	$\overline{Z}$ a	I1a	I2a	I3a	I2a	I3a	I2a	I3a
5	I0b	Za	I0b	$\overline{Z}$ a	I1a	I2a	I1a	I2a	I1a	I2a
6	I1b	N/C	I1b	N/C	I0a	N/C	I0a	N/C	I0a	N/C
7	Zb	I0b	$\overline{Z}$ b	I0b	Za	I1a	$\overline{Z}$ a	I1a	$\overline{Z}$ a	I1a
8	GND	I1b	GND	I1b	GND	I0a	GND	I0a	GND	I0a
9	Zd	Zb	$\overline{Z}$ d	$\overline{Z}$ b	Zb	Za	$\overline{Z}$ b	$\overline{Z}$ a	$\overline{Z}$ b	$\overline{Z}$ a
10	I1d	GND	I1d	GND	I0b	GND	I0b	GND	I0b	GND
11	I0d	N/C	I0d	N/C	I1b	N/C	I1b	N/C	I1b	N/C
12	Zc	Zd	$\overline{Z}$ c	$\overline{Z}$ d	I2b	Zb	I2b	$\overline{Z}$ b	I2b	$\overline{Z}$ b
13	I1c	I1d	I1c	I1d	I3b	I0b	I3b	I0b	I3b	I0b
14	I0c	I0d	I0c	I0d	S0	I1b	S0	I1b	S0	I1b
15	$\overline{OE}$	Zc	$\overline{OE}$	$\overline{Z}$ c	$\overline{OE}$ b	I2b	$\overline{E}$ b	I2b	$\overline{OE}$ b	I2b
16	V_{CC}	N/C	V_{CC}	N/C	V_{CC}	N/C	V_{CC}	N/C	V_{CC}	N/C
17		I1c		I1c		I3b		I3b		I3b
18		I0c		I0c		S0		S0		S0
19		$\overline{OE}$		$\overline{OE}$		$\overline{OE}$ b		$\overline{E}$ b		$\overline{OE}$ b
20		V_{CC}		V_{CC}		V_{CC}		V_{CC}		V_{CC}

FIGURE 1. Terminal connections - Continued.

DEVICE TYPE 01

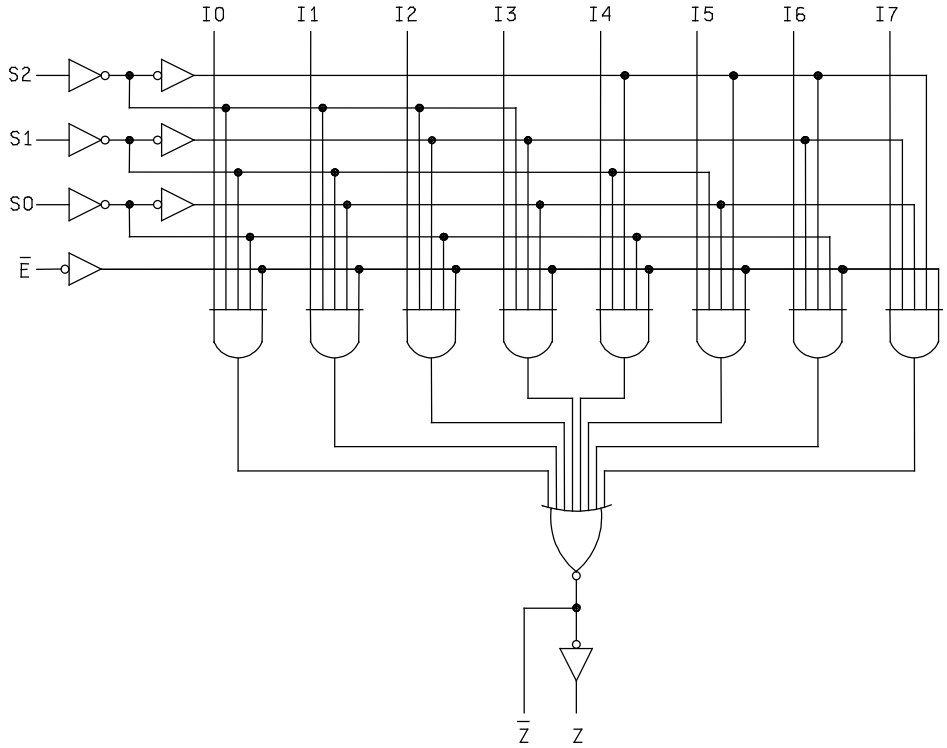

DEVICE TYPE 02

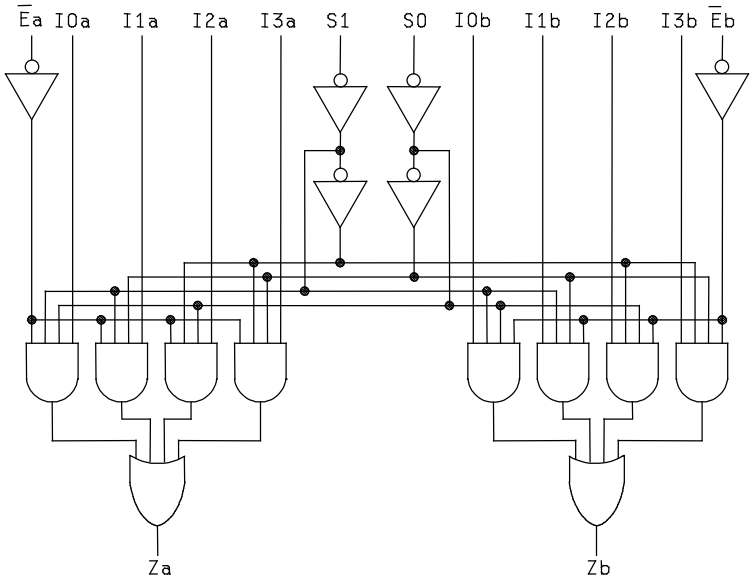

FIGURE 2. Logic diagrams.

DEVICE TYPE 03

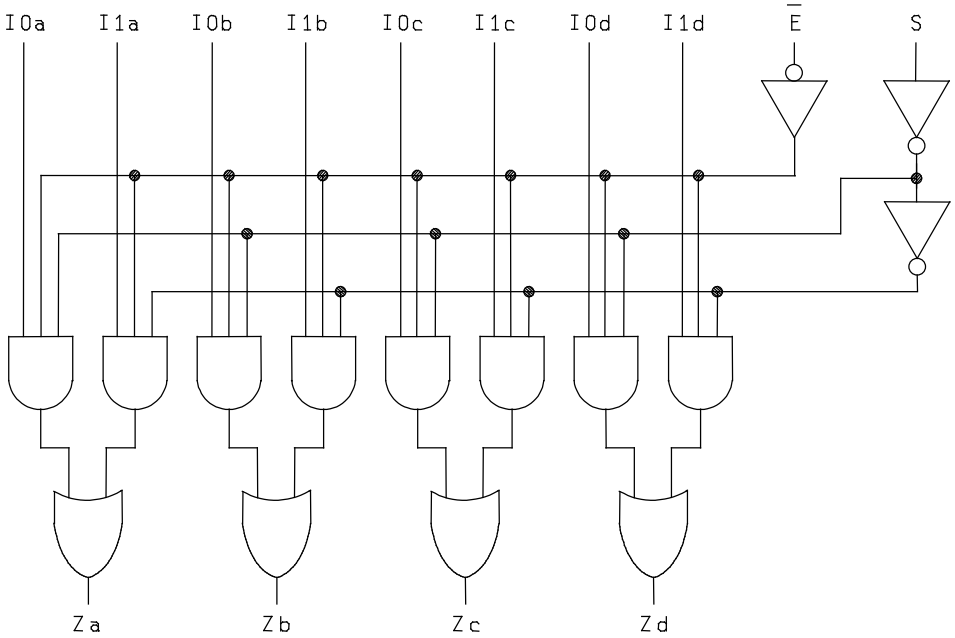

DEVICE TYPE 04

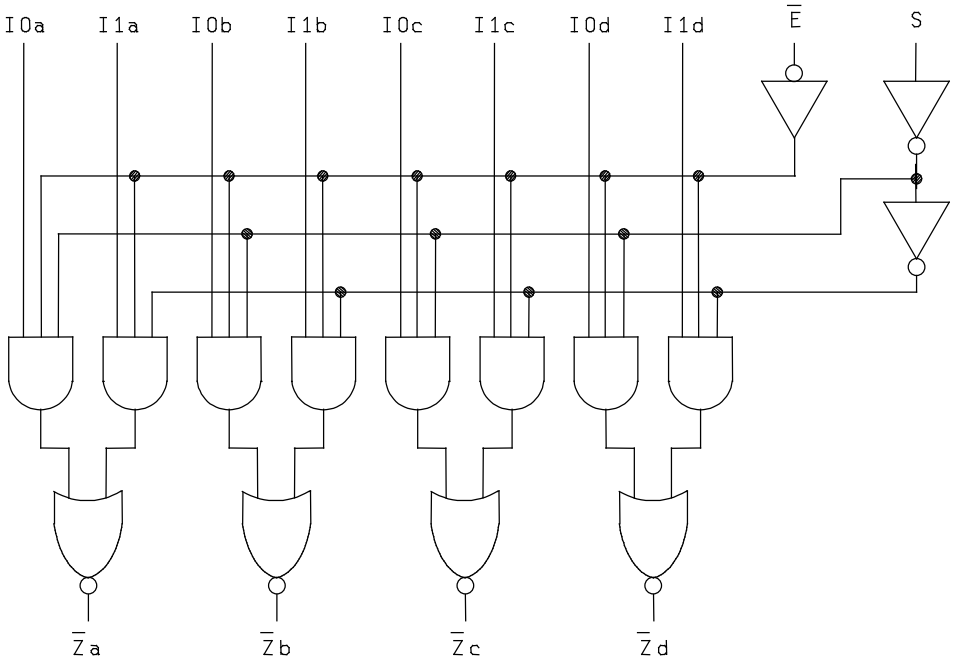

FIGURE 2. Logic diagrams - Continued.

DEVICE TYPE 05

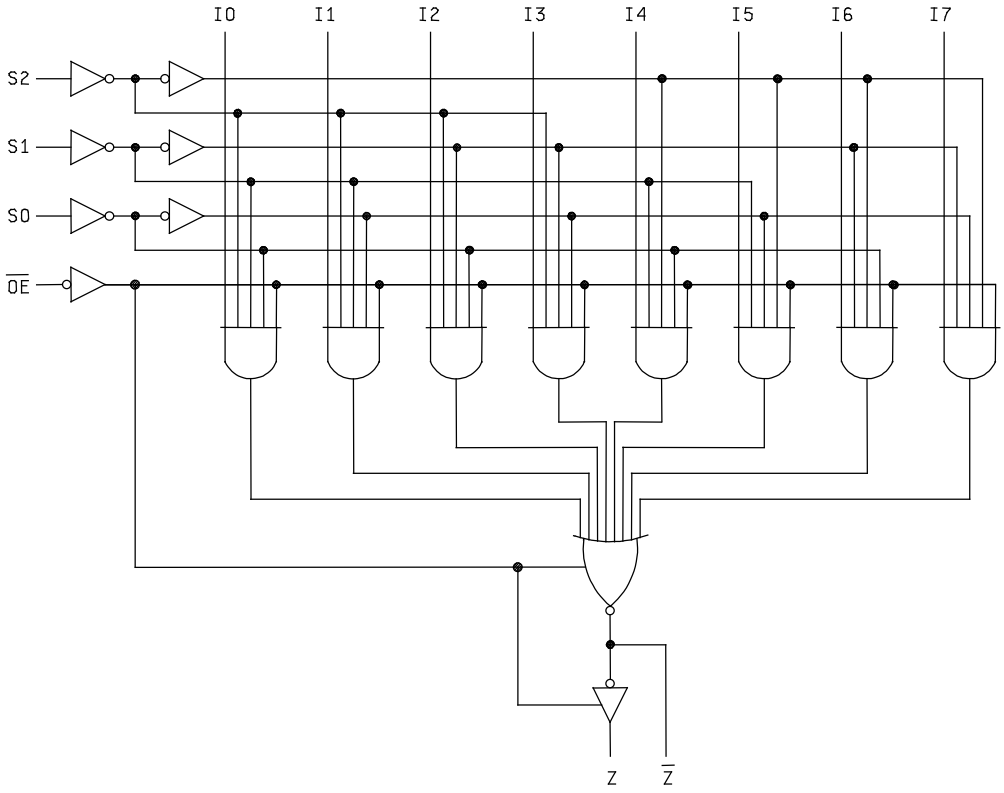

DEVICE TYPE 06

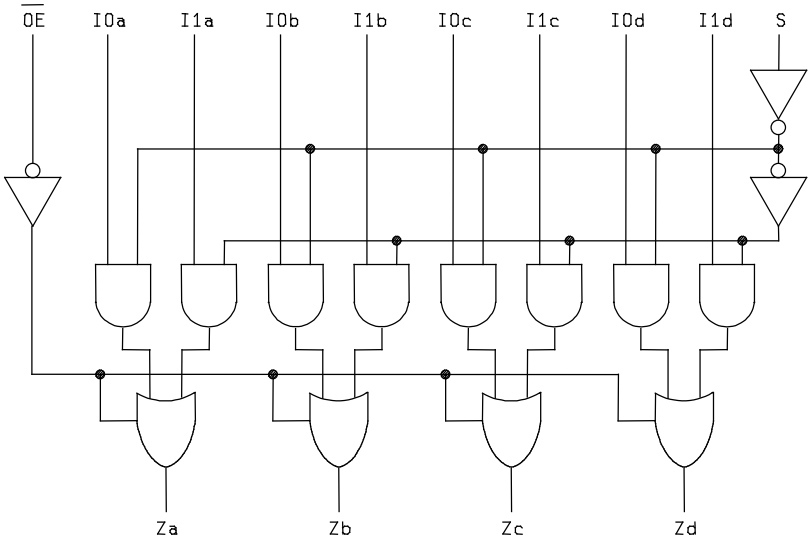

FIGURE 2. Logic diagrams - Continued.

DEVICE TYPE 07

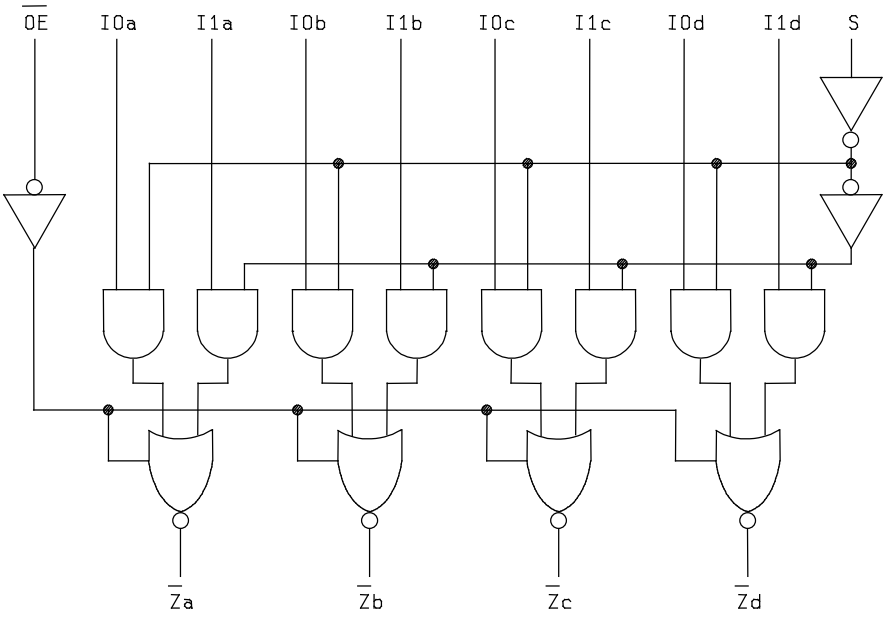

DEVICE TYPE 08

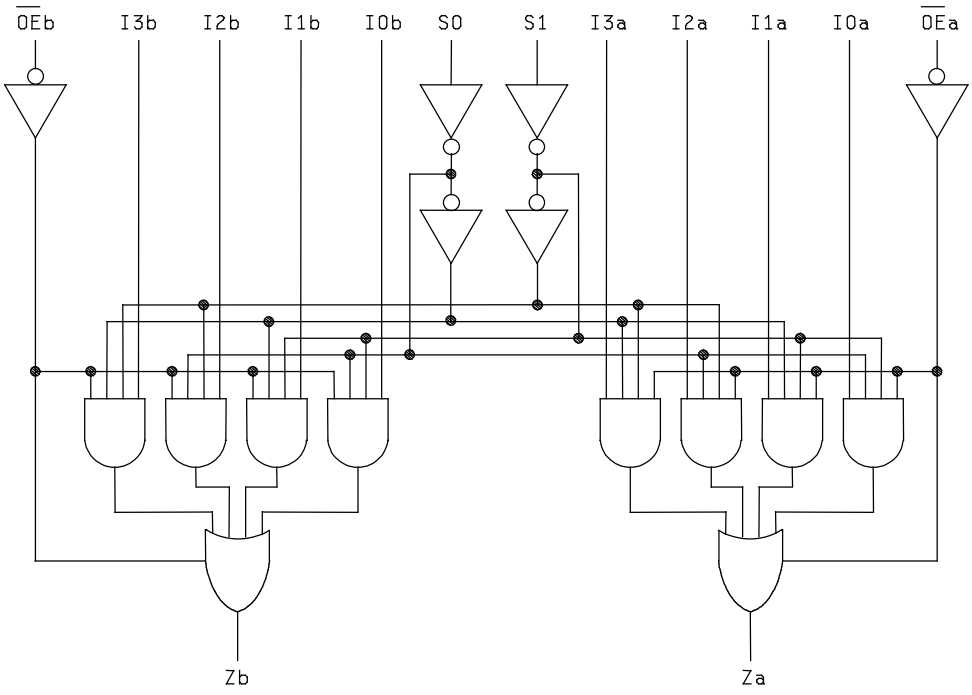

FIGURE 2. Logic diagrams - Continued.

DEVICE TYPE 09

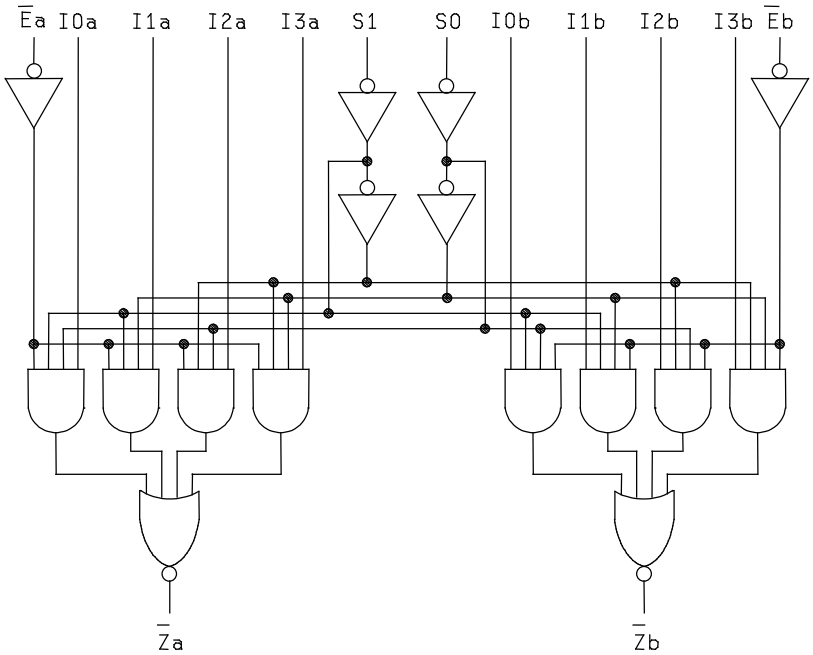

DEVICE TYPE 10

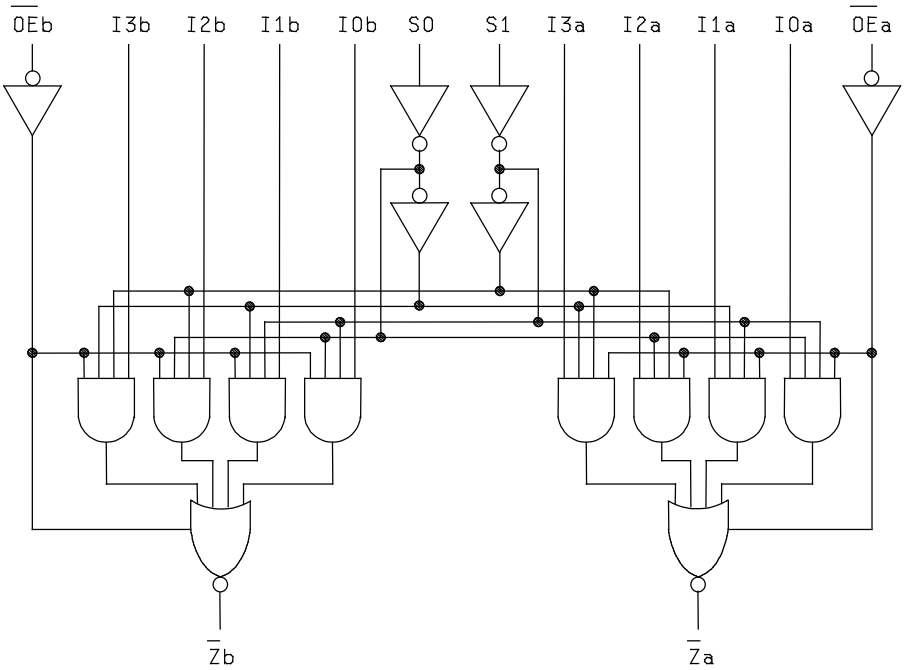

FIGURE 2. Logic diagrams - Continued.

Device type 01

INPUTS				OUTPUTS	
$\overline{E}$	S2	S1	S0	$\overline{Z}$	Z
H	X	X	X	H	L
L	L	L	L	$\overline{I}$ 0	I 0
L	L	L	H	$\overline{I}$ 1	I 1
L	L	H	L	$\overline{I}$ 2	I 2
L	L	H	H	$\overline{I}$ 3	I 3
L	H	L	L	$\overline{I}$ 4	I 4
L	H	L	H	$\overline{I}$ 5	I 5
L	H	H	L	$\overline{I}$ 6	I 6
L	H	H	H	$\overline{I}$ 7	I 7

Device type 02

SELECT INPUTS		INPUTS (a or b)					OUTPUT
S0	S1	$\overline{E}$	I 0	I 1	I 2	I 3	Z
X	X	H	X	X	X	X	L
L	L	L	L	X	X	X	L
L	L	L	H	X	X	X	H
H	L	L	X	L	X	X	L
H	L	L	X	H	X	X	H
L	H	L	X	X	L	X	L
L	H	L	X	X	H	X	H
H	H	L	X	X	X	L	L
H	H	L	X	X	X	H	H

H = HIGH voltage level
L = LOW voltage level
X = Immaterial

FIGURE 3. Truth tables.

Device type 03

INPUTS				OUTPUT
$\overline{E}$	S	I 0	I 1	Z
H	X	X	X	L
L	H	X	L	L
L	H	X	H	H
L	L	L	X	L
L	L	H	X	H

Device type 04

INPUTS				OUTPUT
$\overline{E}$	S	I 0	I 1	$\overline{Z}$
H	X	X	X	H
L	L	L	X	H
L	L	H	X	L
L	H	X	L	H
L	H	X	H	L

Device type 05

INPUTS				OUTPUTS	
$\overline{OE}$	S2	S1	S0	$\overline{Z}$	Z
H	X	X	X	Z	Z
L	L	L	L	$\overline{I}$ 0	I 0
L	L	L	H	$\overline{I}$ 1	I 1
L	L	H	L	$\overline{I}$ 2	I 2
L	L	H	H	$\overline{I}$ 3	I 3
L	H	L	L	$\overline{I}$ 4	I 4
L	H	L	H	$\overline{I}$ 5	I 5
L	H	H	L	$\overline{I}$ 6	I 6
L	H	H	H	$\overline{I}$ 7	I 7

Device type 06

OUTPUT ENABLE	SELECT INPUT	DATE INPUTS		OUTPUTS
$\overline{OE}$	S	I 0	I 1	Z
H	X	X	X	(Z)
L	H	X	L	L
L	H	X	H	H
L	L	L	X	L
L	L	H	X	H

H = HIGH voltage level
L = LOW voltage level
X = Immaterial
(Z) = High impedance

FIGURE 3. Truth tables - Continued.

Device type 07

OUTPUT ENABLE	SELECT INPUT	DATE INPUTS		OUTPUTS
$\overline{OE}$	S	I 0	I 1	$\overline{Z}$
H	X	X	X	Z
L	H	X	L	H
L	H	X	H	L
L	L	L	X	H
L	L	H	X	L

Device type 08

SELECT INPUTS		DATA INPUTS				OUTPUT ENABLE	OUTPUT
S0	S1	I 0	I 1	I 2	I 3	$\overline{OE}$	Z
X	X	X	X	X	X	H	(Z)
L	L	L	X	X	X	L	L
L	L	H	X	X	X	L	H
H	L	X	L	X	X	L	L
H	L	X	H	X	X	L	H
L	H	X	X	L	X	L	L
L	H	X	X	H	X	L	H
H	H	X	X	X	L	L	L
H	H	X	X	X	H	L	H

H = HIGH voltage level
L = LOW voltage level
X = Immaterial
(Z) = High impedance

FIGURE 3. Truth tables - Continued.

Device type 09

SELECT INPUTS		INPUTS (a or b)					OUTPUT
S0	S1	$\overline{E}$	I 0	I 1	I 2	I 3	$\overline{Z}$
X	X	H	X	X	X	X	H
L	L	L	L	X	X	X	H
L	L	L	H	X	X	X	L
H	L	L	X	L	X	X	H
H	L	L	X	H	X	X	L
L	H	L	X	X	L	X	H
L	H	L	X	X	H	X	L
H	H	L	X	X	X	L	H
H	H	L	X	X	X	H	L

Device type 10

SELECT INPUTS		DATA INPUTS				OUTPUT ENABLE	OUTPUT
S0	S1	I 0	I 1	I 2	I 3	$\overline{OE}$	$\overline{Z}$
X	X	X	X	X	X	H	(Z)
L	L	L	X	X	X	L	H
L	L	H	X	X	X	L	L
H	L	X	L	X	X	L	H
H	L	X	H	X	X	L	L
L	H	X	X	L	X	L	H
L	H	X	X	H	X	L	L
H	H	X	X	X	L	L	H
H	H	X	X	X	H	L	L

Address inputs S0 and S1 are common to both sections

H = HIGH voltage level
L = LOW voltage level
X = Immaterial
(Z) = High impedance

FIGURE 3. Truth tables - Continued.

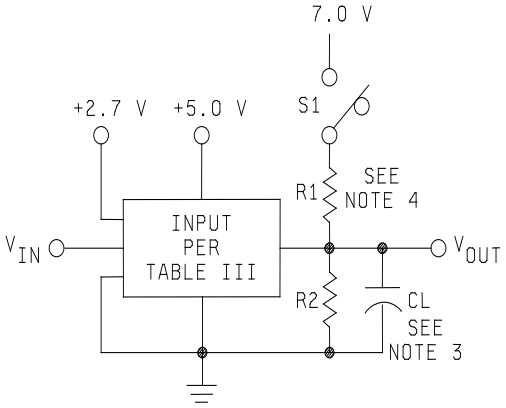

Test Circuit

Test Type	S1
t_{PLH}	Open
t_{PHL}	Open
t_{PHZ}	Open
t_{PZH}	Open
t_{PLZ}	Closed
t_{PZL}	Closed

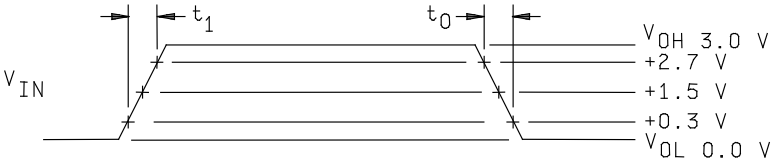

NOTES:

1. V_{IN} input pulse has the following characteristics: $t_1 = t_0 \leq 2.5$ ns, PRR $\leq$ 1 MHz, $Z_{OUT} \approx 50\Omega$.
2. Inputs not under test are at ground.
3. C_L = 50 pF ±10% including scope probe, wiring and stray capacitance without package in test fixture.
4. R1 = R2 = 499Ω ±5%.
5. Voltage measurements are to be made with respect to network ground terminal.

FIGURE 4. Switching time test circuit and waveform for all device types.

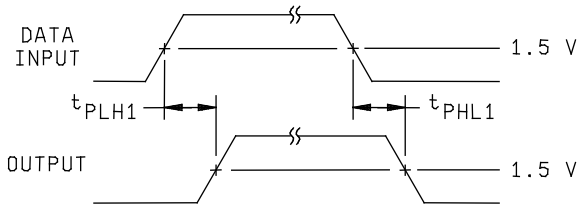

DEVICE TYPES 01,02,03,05,06 AND 08

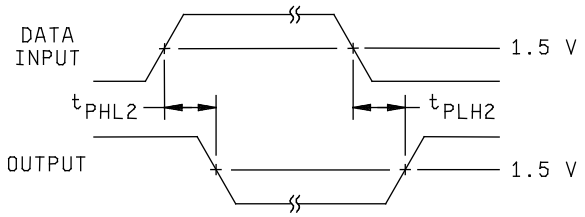

DEVICE TYPES 01,04,05,07,09 AND 10

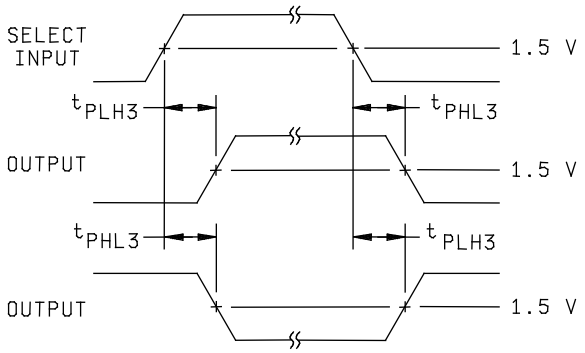

DEVICE TYPES 01,02,03,05,06 AND 08

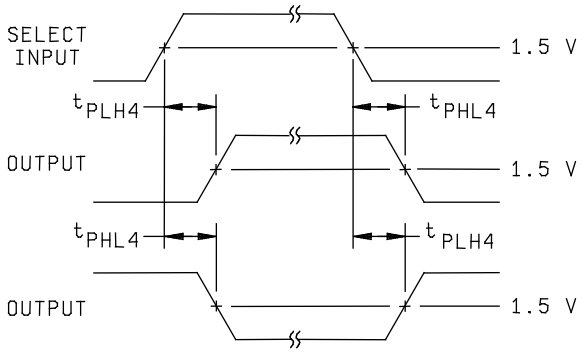

DEVICE TYPES 01,04,05,07,09 AND 10

FIGURE 4. Switching time waveform - Continued.

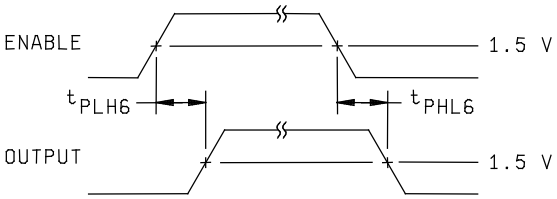

DEVICE TYPES 01,04 AND 09

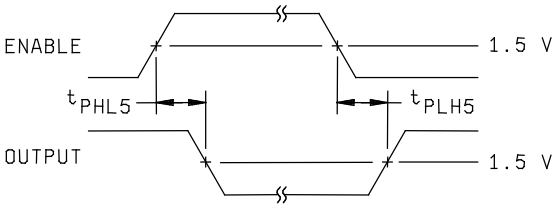

DEVICE TYPES 01,02 AND 03

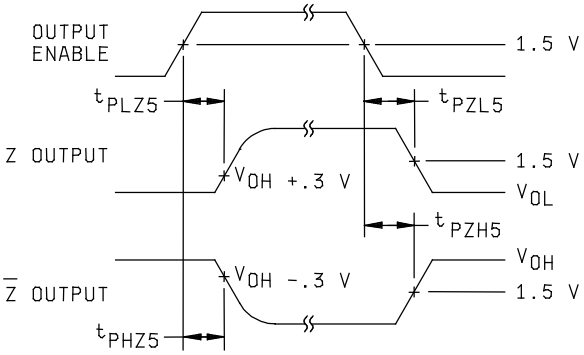

DEVICE TYPES 05,06 AND 08

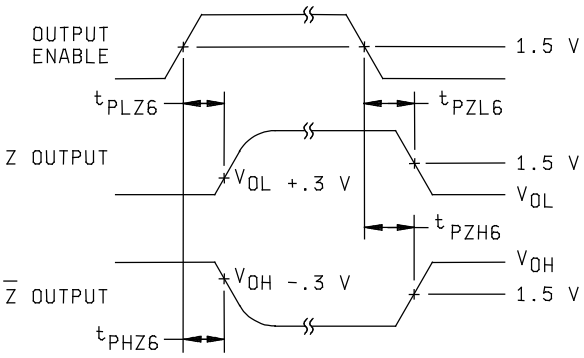

DEVICE TYPES 05,07 AND 10

FIGURE 4. Switching time waveform - Continued.

TABLE III. Group A inspection for device type 01.

Terminal conditions (pins not designated may be high ≥ 2.0 V; low ≤ 0.8 V; or open).

Subgroup	Symbol	MIL-STD-883 method	Cases E, F	1	2	3	4	5	6	7	8	9	10	11	12	13	14	15	16	Measured terminal	Limits		Unit
			Case 2 1/	2	3	4	5	7	8	9	10	12	13	14	15	17	18	19	20				
			Test no.	I3	I2	I1	I0	Z	$\overline{Z}$	$\overline{E}$	GND	S2	S1	S0	I7	I6	I5	I4	V_{CC}		Min	Max	
1	V_{OL}	3007	1				2.0 V		20 mA	0.8 V	GND	0.8 V	0.8 V	0.8 V					4.5 V	$\overline{Z}$		0.5	V
Tc = 25°C		"	2			2.0 V			"	"	"	"	0.8 V	2.0 V					"	"		"	"
		"	3		2.0 V				"	"	"	"	2.0 V	0.8 V					"	"		"	"
		"	4	2.0 V					"	"	"	"	2.0 V	2.0 V					"	"		"	"
		"	5						"	"	"	2.0 V	0.8 V	0.8 V				2.0 V	"	"		"	"
		"	6						"	"	"	"	0.8 V	2.0 V			2.0 V		"	"		"	"
		"	7						"	"	"	"	2.0 V	0.8 V		2.0 V			"	"		"	"
		"	8						"	"	"	"	2.0 V	2.0 V	2.0 V				"	"		"	"
		"	9				0.8 V	20 mA		"	"	0.8 V	0.8 V	0.8 V					"	Z		"	"
	V_{OH}	3006	10						-1.0 mA	2.0 V	"								"	$\overline{Z}$	2.5		"
		"	11				0.8 V		"	0.8 V	"	0.8 V	0.8 V	0.8 V					"	"	"		"
		"	12			0.8 V			"	"	"	"	0.8 V	2.0 V					"	"	"		"
		"	13		0.8 V				"	"	"	"	2.0 V	0.8 V					"	"	"		"
		"	14	0.8 V					"	"	"	"	2.0 V	2.0 V					"	"	"		"
		"	15						"	"	"	2.0 V	0.8 V	0.8 V				0.8 V	"	"	"		"
		"	16						"	"	"	"	0.8 V	2.0 V			0.8 V		"	"	"	"	"
		"	17						"	"	"	"	2.0 V	0.8 V		0.8 V			"	"	"	"	"
		"	18						"	"	"	"	2.0 V	2.0 V	0.8 V				"	"	"	"	"
		"	19				2.0 V	-1.0 mA		"	"	0.8 V	0.8 V	0.8 V					"	Z	"	"	"
	V_{IC}		20	-18 mA							"								"	I3		-1.2	"
			21		-18 mA						"								"	I2		"	"
			22			-18 mA					"								"	I1		"	"
			23				-18 mA				"								"	I0		"	"
			24							-18 mA	"								"	$\overline{E}$		"	"
			25								"	-18 mA							"	S2		"	"
			26								"		-18 mA						"	S1		"	"
			27								"			-18 mA					"	S0		"	"
			28								"				-18 mA				"	I7		"	"
			29								"					-18 mA			"	I6		"	"
			30								"						-18 mA		"	I5		"	"
			31								"							-18 mA	"	I4		"	"
	I_{IH1}	3010	32	2.7 V						4.5 V	"	4.5 V	0.0 V	0.0 V					5.5 V	I3		20	µA
		"	33		2.7 V					"	"	"	0.0 V	4.5 V					"	I2		"	"
		"	34			2.7 V				"	"	"	4.5 V	0.0 V					"	I1		"	"
		"	35				2.7 V			"	"	"	4.5 V	4.5 V					"	I0		"	"
		"	36							2.7 V	"								"	$\overline{E}$		"	"
		"	37								"	2.7 V							"	S2		"	"
		"	38								"		2.7 V						"	S1		"	"
		"	39								"			2.7 V					"	S0		"	"
		"	40							4.5 V	"	0.0 V	0.0 V	0.0 V	2.7 V				"	I7		"	"
		"	41							"	"	"	0.0 V	4.5 V		2.7 V			"	I6		"	"
		"	42							"	"	"	4.5 V	0.0 V			2.7 V		"	I5		"	"
		"	43							"	"	"	4.5 V	4.5 V				2.7 V	"	I4		"	"
	I_{IH2}	"	44	7.0 V						"	"	4.5 V	0.0 V	0.0 V					"	I3		100	"
		"	45		7.0 V					"	"	"	0.0 V	4.5 V					"	I2		"	"
		"	46			7.0 V				"	"	"	4.5 V	0.0 V					"	I1		"	"
		"	47				7.0 V			"	"	"	4.5 V	4.5 V					"	I0		"	"
		"	48							7.0 V	"								"	$\overline{E}$		"	"
		"	49								"	7.0 V							"	S2		"	"
		"	50								"		7.0 V						"	S1		"	"
		"	51								"			7.0 V					"	S0		"	"
		"	52							4.5 V	"	0.0 V	0.0 V	0.0 V	7.0 V				"	I7		"	"
		"	53							"	"	"	0.0 V	4.5 V		7.0 V			"	I6		"	"
		"	54							"	"	"	4.5 V	0.0 V			7.0 V		"	I5		"	"
		"	55							"	"	"	4.5 V	4.5 V				7.0 V	"	I4		"	"

See footnotes at end of table.

TABLE III. Group A inspection for device type 01 - Continued.
Terminal conditions (pins not designated may be high ≥ 2.0 V; low ≤ 0.8 V; or open).

Subgroup	Symbol	MIL-STD-883 method	Cases E, F	1	2	3	4	5	6	7	8	9	10	11	12	13	14	15	16	Measured terminal	Limits		Unit
			Case 2 1/	2	3	4	5	7	8	9	10	12	13	14	15	17	18	19	20				
			Test no.	I3	I2	I1	I0	Z	$\overline{Z}$	$\overline{E}$	GND	S2	S1	S0	I7	I6	I5	I4	V_{CC}		Min	Max	
1 Tc = 25°C	I_{IL}	3009	56	0.5 V						0.0 V	GND	0.0 V	4.5 V	4.5 V					5.5 V	I3	2/	2/	mA
		"	57		0.5 V					"	"	"	4.5 V	0.0 V					"	I2	"	"	"
		"	58			0.5 V				"	"	"	0.0 V	4.5 V					"	I1	"	"	"
		"	59				0.5 V			"	"	"	0.0 V	0.0 V					"	I0	"	"	"
		"	60							0.5 V	"								"	$\overline{E}$	"	"	"
		"	61								"	0.5 V							"	S2	"	"	"
		"	62								"		0.5 V						"	S1	"	"	"
		"	63								"			0.5 V					"	S0	"	"	"
		"	64							0.0 V	"	4.5 V	4.5 V	4.5 V	0.5 V				"	I7	"	"	"
		"	65							"	"	"	4.5 V	0.0 V		0.5 V			"	I6	"	"	"
		"	66							"	"	"	0.0 V	4.5 V			0.5 V		"	I5	"	"	"
		"	67							"	"	"	0.0 V	0.0 V				0.5 V	"	I4	"	"	"
	I_{OS}	3011	68				4.5 V	0.0 V		0.0 V	"	0.0 V	0.0 V	0.0 V					"	Z	-60	-150	"
		3011	69						0.0 V	4.5 V	"								"	$\overline{Z}$	-60	-150	"
	I_{OD}		70					2.5 V		5.5 V	"								4.5 V	Z	60		"
			71				5.5 V		2.5 V	0.0 V	"	0.0 V	0.0 V	0.0 V					4.5 V	$\overline{Z}$	60		"
	I_{CC}	3005	72	4.5 V	4.5 V	4.5 V	4.5 V			4.5 V	"	4.5 V	4.5 V	4.5 V	4.5 V	4.5 V	4.5 V	4.5 V	5.5 V	V_{CC}		21	"
2	Same tests, terminal conditions, and limits as subgroup 1, except T_C = +125°C and V_{IC} tests are omitted.																						
3	Same tests, terminal conditions, and limits as subgroup 1, except T_C = -55°C and V_{IC} tests are omitted.																						
7 Tc = 25°C	Func-tional test 3/	3014	73	A	A	A	A	L	H	A	GND	B	B	B	A	A	A	A	4/				
		"	74	"	"	"	"	"	"	"	"	"	B	A	"	"	"	"	"				
		"	75	"	"	"	"	"	"	"	"	"	A	B	"	"	"	"	"				
		"	76	"	"	"	"	"	"	"	"	"	A	A	"	"	"	"	"				
		"	77	"	"	"	"	"	"	"	"	A	B	B	"	"	"	"	"				
		"	78	"	"	"	"	"	"	"	"	"	B	A	"	"	"	"	"				
		"	79	"	"	"	"	"	"	"	"	"	A	B	"	"	"	"	"				
		"	80	"	"	"	"	"	"	"	"	"	A	A	"	"	"	"	"				
		"	81	B	B	B	"	H	L	B	"	B	B	B	B	B	B	B	"				
		"	82	"	B	A	B	"	"	"	"	"	B	A	"	"	"	"	"				
		"	83	"	A	B	"	"	"	"	"	"	A	B	"	"	"	"	"				
		"	84	A	B	"	"	"	"	"	"	"	A	A	"	"	"	"	"				
		"	85	B	"	"	"	"	"	"	"	A	B	B	"	"	"	A	"				
		"	86	"	"	"	"	"	"	"	"	"	B	A	"	"	A	B	"				
		"	87	"	"	"	"	"	"	"	"	"	A	B	"	A	B	"	"				
		"	88	"	"	"	"	"	"	"	"	"	A	A	A	B	B	"	"				
		"	89	A	A	A	"	L	H	"	"	B	B	B	"	A	A	A	"				
		"	90	"	A	B	A	"	"	"	"	"	B	A	"	"	"	"	"				
		"	91	"	B	A	"	"	"	"	"	"	A	B	"	"	"	"	"				
		"	92	B	A	"	"	"	"	"	"	"	A	A	"	"	"	"	"				
		"	93	A	"	"	"	"	"	"	"	A	B	B	"	"	"	B	"				
		"	94	"	"	"	"	"	"	"	"	"	B	A	"	"	B	A	"				
		"	95	"	"	"	"	"	"	"	"	"	A	B	"	B	A	"	"				
		"	96	"	"	"	"	"	"	"	"	"	A	A	B	A	A	"	"				
8	Same tests, terminal conditions, and limits as for subgroup 7, except T_C = +125°C and T_C = -55°C.																						

See footnotes at end of device types 01.

TABLE III. Group A inspection for device type 01 - Continued.

Terminal conditions (pins not designated may be high ≥ 2.0 V; low ≤ 0.8 V; or open).

Subgroup	Symbol	MIL-STD-883 method	Cases E, F	1	2	3	4	5	6	7	8	9	10	11	12	13	14	15	16	Measured terminal	Limits		Unit
			Case 2 1/	2	3	4	5	7	8	9	10	12	13	14	15	17	18	19	20				
			Test no.	I3	I2	I1	I0	Z	$\overline{Z}$	$\overline{E}$	GND	S2	S1	S0	I7	I6	I5	I4	V_{CC}		Min	Max	
9	t_{PLH1}	3003	97				IN	OUT		0.0 V	GND	0.0 V	0.0 V	0.0 V					5.0 V	I0 to Z	3.0	6.5	ns
T_C = 25°C		Fig. 4	98			IN		"		"	"	"	0.0 V	2.7 V					"	I1 to Z	"	"	"
		"	99		IN			"		"	"	"	2.7 V	0.0 V					"	I2 to Z	"	"	"
		"	100	IN				"		"	"	"	2.7 V	2.7 V					"	I3 to Z	"	"	"
		"	101					"		"	"	2.7 V	0.0 V	0.0 V				IN	"	I4 to Z	"	"	"
		"	102					"		"	"	"	0.0 V	2.7 V			IN		"	I5 to Z	"	"	"
		"	103					"		"	"	"	2.7 V	0.0 V		IN			"	I6 to Z	"	"	"
		"	104					"		"	"	"	2.7 V	2.7 V	IN				"	I7 to Z	"	"	"
	t_{PHL1}	"	105				IN	"		"	"	0.0 V	0.0 V	0.0 V					"	I0 to Z	3.7	7.0	"
		"	106			IN		"		"	"	"	0.0 V	2.7 V					"	I1 to Z	"	"	"
		"	107		IN			"		"	"	"	2.7 V	0.0 V					"	I2 to Z	"	"	"
		"	108	IN				"		"	"	"	2.7 V	2.7 V					"	I3 to Z	"	"	"
		"	109					"		"	"	2.7 V	0.0 V	0.0 V				IN	"	I4 to Z	"	"	"
		"	110					"		"	"	"	0.0 V	2.7 V			IN		"	I5 to Z	"	"	"
		"	111					"		"	"	"	2.7 V	0.0 V		IN			"	I6 to Z	"	"	"
		"	112					"		"	"	"	2.7 V	2.7 V	IN				"	I7 to Z	"	"	"
	t_{PLH2}	"	113				IN		OUT	"	"	0.0 V	0.0 V	0.0 V					"	I0 to $\overline{Z}$	3.0	6.5	"
		"	114			IN			"	"	"	"	0.0 V	2.7 V					"	I1 to $\overline{Z}$	"	"	"
		"	115		IN				"	"	"	"	2.7 V	0.0 V					"	I2 to $\overline{Z}$	"	"	"
		"	116	IN					"	"	"	"	2.7 V	2.7 V					"	I3 to $\overline{Z}$	"	"	"
		"	117						"	"	"	2.7 V	0.0 V	0.0 V				IN	"	I4 to $\overline{Z}$	"	"	"
		"	118						"	"	"	"	0.0 V	2.7 V			IN		"	I5 to $\overline{Z}$	"	"	"
		"	119						"	"	"	"	2.7 V	0.0 V		IN			"	I6 to $\overline{Z}$	"	"	"
		"	120						"	"	"	"	2.7 V	2.7 V	IN				"	I7 to $\overline{Z}$	"	"	"
	t_{PHL2}	"	121				IN		"	"	"	0.0 V	0.0 V	0.0 V					"	I0 to $\overline{Z}$	1.5	4.0	"
		"	122			IN			"	"	"	"	0.0 V	2.7 V					"	I1 to $\overline{Z}$	"	"	"
		"	123		IN				"	"	"	"	2.7 V	0.0 V					"	I2 to $\overline{Z}$	"	"	"
		"	124	IN					"	"	"	"	2.7 V	2.7 V					"	I3 to $\overline{Z}$	"	"	"
		"	125						"	"	"	2.7 V	0.0 V	0.0 V				IN	"	I4 to $\overline{Z}$	"	"	"
		"	126						"	"	"	"	0.0 V	2.7 V			IN		"	I5 to $\overline{Z}$	"	"	"
		"	127						"	"	"	"	2.7 V	0.0 V		IN			"	I6 to $\overline{Z}$	"	"	"
		"	128						"	"	"	"	2.7 V	2.7 V	IN				"	I7 to $\overline{Z}$	"	"	"
	t_{PLH5}	"	129	2.7 V	2.7 V	2.7 V	2.7 V	OUT		IN	"	0.0 V	0.0 V	0.0 V	2.7 V	2.7 V	2.7 V	2.7 V	"	$\overline{E}$ to Z	5.0	9.5	"
	t_{PHL5}	"	130	2.7 V	2.7 V	2.7 V	2.7 V	OUT		IN	"	0.0 V	0.0 V	0.0 V	"	2.7 V	2.7 V	2.7 V	"	$\overline{E}$ to Z	3.5	7.0	"
	t_{PLH6}	"	131	0.0 V	0.0 V	0.0 V	0.0 V		OUT	"	"	2.7 V	2.7 V	2.7 V	"	0.0 V	0.0 V	0.0 V	"	$\overline{E}$ to $\overline{Z}$	3.0	6.1	"
	t_{PHL6}	"	132	0.0 V	0.0 V	0.0 V	0.0 V		OUT	"	"	2.7 V	2.7 V	2.7 V	"	0.0 V	0.0 V	0.0 V	"	$\overline{E}$ to $\overline{Z}$	3.0	6.0	"
	t_{PLH3}	"	133			2.7 V	0.0 V	OUT		0.0 V	"	0.0 V	0.0 V	IN					"	S0 to Z	4.5	10.5	"
		"	134		2.7 V		"	"		"	"	0.0 V	IN	0.0 V					"	S1 to Z	"	"	"
		"	135				"	"		"	"	IN	0.0 V	0.0 V				2.7 V	"	S2 to Z	"	"	"
	t_{PHL3}	"	136			0.0 V	2.7 V	"		"	"	0.0 V	0.0 V	IN					"	S0 to Z	4.0	9.0	"
		"	137		0.0 V		"	"		"	"	0.0 V	IN	0.0 V					"	S1 to Z	"	"	"
		"	138				"	"		"	"	IN	0.0 V	0.0 V				0.0 V	"	S2 to Z	"	"	"

See footnotes at end of device types 01.

TABLE III. Group A inspection for device type 01 - Continued.
Terminal conditions (pins not designated may be high ≥ 2.0 V; low ≤ 0.8 V; or open).

Subgroup	Symbol	MIL-STD-883 method	Cases E, F	1	2	3	4	5	6	7	8	9	10	11	12	13	14	15	16	Measured terminal	Limits		Unit
			Case 2 1/	2	3	4	5	7	8	9	10	12	13	14	15	17	18	19	20				
			Test no.	I3	I2	I1	I0	Z	$\overline{Z}$	$\overline{E}$	GND	S2	S1	S0	I7	I6	I5	I4	V_{CC}		Min	Max	
9	t_{PLH4}	3003	139			0.0 V	2.7 V		OUT	0.0 V	GND	0.0 V	0.0 V	IN					5.0 V	S0 to $\overline{Z}$	4.0	9.0	ns
		Fig 4	140		0.0 V		"		"	"	"	0.0 V	IN	0.0 V					"	S1 to $\overline{Z}$	"	"	"
		"	141				"		"	"	"	IN	0.0 V	0.0 V				0.0 V	"	S2 to $\overline{Z}$	"	"	"
	t_{PHL4}	"	142			2.7 V	0.0 V		"	"	"	0.0 V	0.0 V	IN					"	S0 to $\overline{Z}$	3.2	7.5	"
		"	143		2.7 V		"		"	"	"	0.0 V	IN	0.0 V					"	S1 to $\overline{Z}$	"	"	"
		"	144				"		"	"	"	IN	0.0 V	0.0 V				2.7 V	"	S2 to $\overline{Z}$	"	"	"
10	Same tests and terminal conditions as subgroup 9, except T_C = +125°C and for the following limits. t_{PLH1} = 2.5 to 8.5 ns t_{PHL1} = 3.5 to 9.0 ns t_{PLH2} = 2.5 to 7.5 ns t_{PHL2} = 1.5 to 6.0 ns t_{PLH3} = 4.5 to 13.5 ns t_{PHL3} = 4.0 to 9.5 ns t_{PLH4} = 3.5 to 11.5 ns t_{PHL4} = 3.0 to 8.0 ns t_{PLH5} = 4.0 to 12.0 ns t_{PHL5} = 3.0 to 8.0 ns t_{PLH6} = 3.0 to 7.5 ns t_{PHL6} = 2.5 to 6.5 ns																						
11	Same tests, terminal conditions and limits as for subgroup 10, except T_C = -55°C.																						

1/ For case 2 pins not referenced are N/C.
2/ I_{IL} limits shall be as follows:

Test	Min/Max limits in mA for circuit		
	A	B	C
I_{IL}	-.25/-.60	-.03/-.60	-.03/-.60

3/ A = 2.5 V, B = 0.5 V. H ≥ 1.5 V, L ≤ 1.5 V.
4/ Perform function sequence at V_{CC} = 4.5 V and repeat at V_{CC} = 5.5 V.

TABLE III. Group A inspection for device type 02.

Terminal conditions (pins not designated may be high ≥ 2.0 V; low ≤ 0.8 V; or open).

Subgroup	Symbol	MIL-STD-883 method	Cases E, F	1	2	3	4	5	6	7	8	9	10	11	12	13	14	15	16	Measured terminal	Limits		Unit
			Case 2 1/	2	3	4	5	7	8	9	10	12	13	14	15	17	18	19	20				
			Test no.	$\overline{E}$ a	S1	I3a	I2a	I1a	I0a	Za	GND	Zb	I0b	I1b	I2b	I3b	S0	$\overline{E}$ b	V_{CC}		Min	Max	
1 Tc = 25°C	V_{OH}	3006	1	0.8 V	0.8 V				2.0 V	-1 mA	GND						0.8 V		4.5 V	Za	2.5		V
		"	2	"	0.8 V			2.0 V		"	"						2.0 V		"	"	"		"
		"	3	"	2.0 V		2.0 V			"	"						0.8 V		"	"	"		"
		"	4	"	2.0 V	2.0 V				"	"						2.0 V		"	"	"		"
		"	5		0.8 V						"	-1 mA	2.0 V				0.8 V	0.8 V	"	Zb	"		"
		"	6		0.8 V						"	"		2.0 V			2.0 V	"	"	"	"		"
		"	7		2.0 V						"	"			2.0 V		0.8 V	"	"	"	"		"
		"	8		2.0 V						"	"				2.0 V	2.0 V	"	"	"	"		"
	V_{OL}	3007	9	2.0 V						20 mA	"								"	Za		0.5	"
		"	10	0.8 V	0.8 V				0.8 V	"	"						0.8 V		"	"		"	"
		"	11	"	0.8 V			0.8 V		"	"						2.0 V		"	"		"	"
		"	12	"	2.0 V		0.8 V			"	"						0.8 V		"	"		"	"
		"	13	"	2.0 V	0.8 V				"	"						2.0 V		"	"		"	"
		"	14								"	20 mA						2.0 V	"	Zb		"	"
		"	15		0.8 V						"	"	0.8 V				0.8 V	0.8 V	"	"		"	"
		"	16		0.8 V						"	"		0.8 V			2.0 V	"	"	"		"	"
		"	17		2.0 V						"	"			0.8 V		0.8 V	"	"	"		"	"
		"	18		2.0 V						"	"				0.8 V	2.0 V	"	"	"		"	"
	V_{IC}		19	-18 mA							"								"	$\overline{E}$ a		-1.2	"
			20		-18 mA						"								"	S1		"	"
			21			-18 mA					"								"	I3a		"	"
			22				-18 mA				"								"	I2a		"	"
			23					-18 mA			"								"	I1a		"	"
			24						-18 mA		"								"	I0a		"	"
			25								"		-18 mA						"	I0b		"	"
			26								"			-18 mA					"	I1b		"	"
			27								"				-18 mA				"	I2b		"	"
			28								"					-18 mA			"	I3b		"	"
			29								"						-18 mA		"	S0		"	"
			30								"							-18 mA	"	$\overline{E}$ b		"	"
	I_{IH1}	3010	31	2.7 V							"								5.5 V	$\overline{E}$ a		20	µA
		"	32		2.7 V						"								"	S1		"	"
		"	33	4.5 V	0.0 V	2.7 V					"						0.0 V		"	I3a		"	"
		"	34	"	0.0 V		2.7 V				"						4.5 V		"	I2a		"	"
		"	35	"	4.5 V			2.7 V			"						0.0 V		"	I1a		"	"
		"	36	"	"				2.7 V		"						4.5 V		"	I0a		"	"
		"	37		"						"		2.7 V				4.5 V	4.5 V	"	I0b		"	"
		"	38		"						"			2.7 V			0.0 V	"	"	I1b		"	"
		"	39		0.0 V						"				2.7 V		4.5 V	"	"	I2b		"	"
		"	40		0.0 V						"					2.7 V	0.0 V	"	"	I3b		"	"
		"	41								"						2.7 V		"	S0		"	"
		"	42								"							2.7 V	"	$\overline{E}$ b		"	"
	I_{IH2}	"	43	7.0 V							"								"	$\overline{E}$ a		100	"
		"	44		7.0 V						"								"	S1		"	"
		"	45	4.5 V	0.0 V	7.0 V					"						0.0 V		"	I3a		"	"
		"	46	"	0.0 V		7.0 V				"						4.5 V		"	I2a		"	"
		"	47	"	4.5 V			7.0 V			"						0.0 V		"	I1a		"	"
		"	48	"	"				7.0 V		"						4.5 V		"	I0a		"	"
		"	49		"						"		7.0 V				4.5 V	4.5 V	"	I0b		"	"
		"	50		"						"			7.0 V			0.0 V	"	"	I1b		"	"
		"	51		0.0 V						"				7.0 V		4.5 V	"	"	I2b		"	"
		"	52		0.0 V						"					7.0 V	0.0 V	"	"	I3b		"	"
		"	53								"						7.0 V		"	S0		"	"
		"	54								"							7.0 V	"	$\overline{E}$ b		"	"

See footnotes at end of table.

TABLE III. Group A inspection for device type 02 - Continued.
Terminal conditions (pins not designated may be high ≥ 2.0 V; low ≤ 0.8 V; or open).

Subgroup	Symbol	MIL-STD-883 method	Cases E, F	1	2	3	4	5	6	7	8	9	10	11	12	13	14	15	16	Measured terminal	Limits		Unit
			Case 2 1/	2	3	4	5	7	8	9	10	12	13	14	15	17	18	19	20				
			Test no.	$\overline{E}$ a	S1	I3a	I2a	I1a	I0a	Za	GND	Zb	I0b	I1b	I2b	I3b	S0	$\overline{E}$ b	V_{CC}		Min	Max	
1	I_{IL1}	3009	55	0.5 V							GND								5.5 V	$\overline{E}$ a	2/	2/	mA
Tc = 25°C		"	56		0.5 V						"								"	S1	"	"	"
		"	57	0.0 V	4.5 V	0.5 V					"						4.5 V		"	I3a	"	"	"
		"	58	"	4.5 V		0.5 V				"						0.0 V		"	I2a	"	"	"
		"	59	"	0.0 V			0.5 V			"						4.5 V		"	I1a	"	"	"
		"	60	"	"				0.5 V		"						0.0 V		"	I0a	"	"	"
		"	61		"						"		0.5 V				0.0 V	0.0 V	"	I0b	"	"	"
		"	62		"						"			0.5 V			4.5 V	"	"	I1b	"	"	"
		"	63		4.5 V						"				0.5 V		0.0 V	"	"	I2b	"	"	"
		"	64		4.5 V						"					0.5 V	4.5 V	"	"	I3b	"	"	"
		"	65								"						0.5 V		"	S0	"	"	"
		"	66								"							0.5 V	"	$\overline{E}$ b	"	"	"
	I_{OS}	3011	67	0.0 V	0.0 V	0.0 V	0.0 V	0.0 V	4.5 V	0.0 V	"						0.0 V		"	Za	-60	-150	"
		3011	68		0.0 V						"	0.0 V	4.5 V	0.0 V	0.0 V	0.0 V	0.0 V	0.0 V	"	Zb	-60	-150	"
	I_{OD}		69	5.5 V						2.5 V	"								4.5 V	Za	60		"
			70	0.0 V							"	2.5 V						5.5 V	4.5 V	Zb	60		"
	I_{CC}	3005	71	0.0 V	0.0 V	0.0 V	0.0 V	0.0 V	0.0 V		"		0.0 V	0.0 V	0.0 V	0.0 V	0.0 V	0.0 V	5.5 V	V_{CC}		20	"
2	Same tests, terminal conditions, and limits as subgroup 1, except T_C = +125°C and V_{IC} tests are omitted.																						
3	Same tests, terminal conditions, and limits as subgroup 1, except T_C = -55°C and V_{IC} tests are omitted.																						
7	Func-	3014	72	A	A	A	A	A	A	L	GND	L	A	A	A	A	A	A	4/	All			
Tc = 25°C	tional	"	73	B	B	"	"	"	B	L	"	L	B	"	"	"	B	B	"	outputs			
	test	"	74	"	"	"	"	"	A	H	"	H	A	"	"	"	B	"	"				
	3/	"	75	"	"	"	"	B	"	L	"	L	"	B	"	"	A	"	"				
		"	76	"	"	"	"	A	"	H	"	H	"	A	"	"	A	"	"				
		"	77	"	A	"	B	"	"	L	"	L	"	"	B	"	B	"	"				
		"	78	"	"	"	A	"	"	H	"	H	"	"	A	"	B	"	"				
		"	79	"	"	B	"	"	"	L	"	L	"	"	"	B	A	"	"				
		"	80	"	"	A	"	"	"	H	"	H	"	"	"	A	A	"	"				
		"	81	A	B	"	"	"	"	L	"	L	"	"	"	"	B	A	"				
		"	82	"	B	"	"	"	"	"	"	"	"	"	"	"	A	"	"				
		"	83	"	A	"	"	"	"	"	"	"	"	"	"	"	B	"	"				
8	Same tests, terminal conditions, and limits as for subgroup 7, except T_C = +125°C and T_C = -55°C.																						
9	t_{PLH1}	3003	84	0.0 V	0.0 V				IN	OUT	GND						0.0 V		5.0 V	I0a to Za	3.0	7.0	ns
T_C = 25°C		Fig. 4	85	"	0.0 V			IN		"	"						2.7 V		"	I1a to Za	"	"	"
		"	86	"	2.7 V		IN			"	"						0.0 V		"	I2a to Za	"	"	"
		"	87	"	2.7 V	IN				"	"						2.7 V		"	I3a to Za	"	"	"
		"	88		0.0 V						"	OUT	IN				0.0 V	0.0 V	"	I0b to Zb	"	"	"
		"	89		0.0 V						"	"		IN			2.7 V	"	"	I1b to Zb	"	"	"
		"	90		2.7 V						"	"			IN		0.0 V	"	"	I2b to Zb	"	"	"
		"	91		2.7 V						"	"				IN	2.7 V	"	"	I3b to Zb	"	"	"
	t_{PHL1}	"	92	0.0 V	0.0 V				IN	OUT	"						0.0 V		"	I0a to Za	2.5	6.5	"
		"	93	"	0.0 V			IN		"	"						2.7 V		"	I1a to Za	"	"	"
		"	94	"	2.7 V		IN			"	"						0.0 V		"	I2a to Za	"	"	"
		"	95	"	2.7 V	IN				"	"						2.7 V		"	I3a to Za	"	"	"
		"	96		0.0 V						"	OUT	IN				0.0 V	0.0 V	"	I0b to Zb	"	"	"
		"	97		0.0 V						"	"		IN			2.7 V	"	"	I1b to Zb	"	"	"
		"	98		2.7 V						"	"			IN		0.0 V	"	"	I2b to Zb	"	"	"
		"	99		2.7 V						"	"				IN	2.7 V	"	"	I3b to Zb	"	"	"

See footnotes at end of table.

TABLE III. Group A inspection for device type 02 - Continued.
Terminal conditions (pins not designated may be high ≥ 2.0 V; low ≤ 0.8 V; or open).

Subgroup	Symbol	MIL-STD-883 method	Cases E, F	1	2	3	4	5	6	7	8	9	10	11	12	13	14	15	16	Measured terminal	Limits		Unit
			Case 2 1/	2	3	4	5	7	8	9	10	12	13	14	15	17	18	19	20				
			Test no.	$\overline{E}$ a	S1	I3a	I2a	I1a	I0a	Za	GND	Zb	I0b	I1b	I2b	I3b	S0	$\overline{E}$ b	V_{CC}		Min	Max	
9	t_{PLH5}	3003	100	IN	0.0 V				2.7 V	OUT	GND						0.0 V		5.0 V	$\overline{E}$ a to Za	4.5	9.0	ns
T_C = 25°C		Fig. 4	101		"						"	OUT	2.7 V				"	IN	"	$\overline{E}$ b to Zb	4.5	9.0	"
	t_{PHL5}	"	102	IN	"				2.7 V	OUT	"						"		"	$\overline{E}$ a to Za	3.0	7.0	"
		"	103		"						"	OUT	2.7 V				"	IN	"	$\overline{E}$ b to Zb	3.0	7.0	"
	t_{PLH3}	"	104	0.0 V	2.7 V	0.0 V	2.7 V			OUT	"						IN		"	S0 to Za	4.5	10.5	"
		"	105		2.7 V						"	OUT			2.7 V	0.0 V	IN	0.0 V	"	S0 to Zb	"	"	"
		"	106	0.0 V	IN	2.7 V		0.0 V		OUT	"						2.7 V		"	S1 to Za	"	"	"
		"	107		IN						"	OUT		0.0 V		2.7 V	2.7 V	0.0 V	"	S1 to Zb	"	"	"
	t_{PHL3}	"	108	0.0 V	0.0 V			0.0 V	2.7 V	OUT	"						IN		"	S0 to Za	3.5	9.0	"
		"	109		0.0 V						"	OUT	2.7 V	0.0 V			IN	0.0 V	"	S0 to Zb	"	"	"
		"	110	0.0 V	IN		0.0 V		2.7 V	OUT	"						0.0 V		"	S1 to Za	"	"	"
		"	111		IN						"	OUT	2.7 V		0.0 V		0.0 V	0.0 V	"	S1 to Zb	"	"	"
10	Same tests and terminal conditions as subgroup 9, except T_C = +125°C and for the following limits. t_{PLH1} = 2.5 to 9.0 ns t_{PHL1} = 2.5 to 8.0 ns t_{PLH3} = 4.5 to 14.0 ns t_{PHL3} = 3.5 to 11.0 ns t_{PLH5} = 4.5 to 11.5 ns t_{PHL5} = 2.5 to 9.0 ns																						
11	Same tests, terminal conditions and limits as for subgroup 10, except T_C = -55°C.																						

1/ For case 2 pins not referenced are N/C.
2/ I_{IL} limits shall be as follows:

Test	Min/Max limits in mA for circuit			
	A	B	C	D
I_{IL}	-.25/-.60	-.03/-.60	-.03/-.60	0.0/-0.30

3/ A = 2.5 V, B = 0.5 V. H ≥ 1.5 V, L ≤ 1.5 V.
4/ Perform function sequence at V_{CC} = 4.5 V and repeat at V_{CC} = 5.5 V.

TABLE III. Group A inspection for device type 03.

Terminal conditions (pins not designated may be high ≥ 2.0 V; low ≤ 0.8 V; or open).

Subgroup	Symbol	MIL-STD-883 method	Cases E, F	1	2	3	4	5	6	7	8	9	10	11	12	13	14	15	16	Measured terminal	Limits		Unit
			Case 2 1/	2	3	4	5	7	8	9	10	12	13	14	15	17	18	19	20				
			Test no.	S	I0a	I1a	Za	I0b	I1b	Zb	GND	Zd	I1d	I0d	Zc	I1c	I0c	$\overline{E}$	V_{CC}		Min	Max	
1 Tc = 25°C	V_{OL}	3007	1	0.8 V	0.8 V	2.0 V	20 mA				GND							0.8 V	4.5 V	Za		0.5	V
		"	2	2.0 V	2.0 V	0.8 V	20 mA				"							"	"	Za		"	"
		"	3	0.8 V				0.8 V	2.0 V	20 mA	"							"	"	Zb		"	"
		"	4	2.0 V				2.0 V	0.8 V	20 mA	"							"	"	Zb		"	"
		"	5	0.8 V							"	20 mA	2.0 V	0.8 V				"	"	Zd		"	"
		"	6	2.0 V							"	20 mA	0.8 V	2.0 V				"	"	Zd		"	"
		"	7	0.8 V							"				20 mA	2.0 V	0.8 V	"	"	Zc		"	"
		"	8	2.0 V							"				20 mA	0.8 V	2.0 V	"	"	Zc		"	"
	V_{OH}	3006	9	0.8 V	2.0 V	0.8 V	-1 mA				"							"	"	Za	2.5		"
		"	10	2.0 V	0.8 V	2.0 V	-1 mA				"							"	"	Za	"		"
		"	11	0.8 V				2.0 V	0.8 V	-1 mA	"							"	"	Zb	"		"
		"	12	2.0 V				0.8 V	2.0 V	-1 mA	"							"	"	Zb	"		"
		"	13	0.8 V							"	-1 mA	0.8 V	2.0 V				"	"	Zd	"		"
		"	14	2.0 V							"	-1 mA	2.0 V	0.8 V				"	"	Zd	"		"
		"	15	0.8 V							"				-1 mA	0.8 V	2.0 V	"	"	Zc	"		"
		"	16	2.0 V							"				-1 mA	2.0 V	0.8 V	"	"	Zc	"		"
	V_{IC}		17	-18 mA							"								"	S		-1.2	"
			18		-18 mA						"								"	I0a		"	"
			19			-18 mA					"								"	I1a		"	"
			20					-18 mA			"								"	I0b		"	"
			21						-18 mA		"								"	I1b		"	"
			22								"		-18 mA						"	I1d		"	"
			23								"			-18 mA					"	I0d		"	"
			24								"					-18 mA			"	I1c		"	"
			25								"						-18 mA		"	I0c		"	"
			26								"							-18 mA	"	$\overline{E}$		"	"
	I_{IH1}	3010	27	2.7 V							"							4.5 V	5.5 V	S		20	µA
		"	28	4.5 V	2.7 V						"							"	"	I0a		"	"
		"	29	0.0 V		2.7 V					"							"	"	I1a		"	"
		"	30	4.5 V				2.7 V			"							"	"	I0b		"	"
		"	31	0.0 V					2.7 V		"							"	"	I1b		"	"
		"	32	0.0 V							"		2.7 V					"	"	I1d		"	"
		"	33	4.5 V							"			2.7 V				"	"	I0d		"	"
		"	34	0.0 V							"					2.7 V		"	"	I1c		"	"
		"	35	4.5 V							"						2.7 V	"	"	I0c		"	"
		"	36								"							2.7 V	"	$\overline{E}$		"	"
	I_{IH2}	"	37	7.0 V							"							4.5 V	"	S		100	"
		"	38	4.5 V	7.0 V						"							"	"	I0a		"	"
		"	39	0.0 V		7.0 V					"							"	"	I1a		"	"
		"	40	4.5 V				7.0 V			"							"	"	I0b		"	"
		"	41	0.0 V					7.0 V		"							"	"	I1b		"	"
		"	42	0.0 V							"		7.0 V					"	"	I1d		"	"
		"	43	4.5 V							"			7.0 V				"	"	I0d		"	"
		"	44	0.0 V							"					7.0 V		"	"	I1c		"	"
		"	45	4.5 V							"						7.0 V	"	"	I0c		"	"
		"	46								"							7.0 V	"	$\overline{E}$		"	"

See footnotes at end of table.

TABLE III. Group A inspection for device type 03.

Terminal conditions (pins not designated may be high ≥ 2.0 V; low ≤ 0.8 V; or open).

Subgroup	Symbol	MIL-STD-883 method	Cases E, F	1	2	3	4	5	6	7	8	9	10	11	12	13	14	15	16	Measured terminal	Limits		Unit
			Case 2 1/	2	3	4	5	7	8	9	10	12	13	14	15	17	18	19	20				
			Test no.	S	I0a	I1a	Za	I0b	I1b	Zb	GND	Zd	I1d	I0d	Zc	I1c	I0c	$\overline{E}$	V_{CC}		Min	Max	
1 Tc = 25°C	I_{IL1}	3009	47	0.5 V							GND								5.5 V	S	2/	2/	mA
		"	48	0.0 V	0.5 V						"								"	I0a	"	"	"
		"	49	4.5 V		0.5 V					"								"	I1a	"	"	"
		"	50	0.0 V				0.5 V			"								"	I0b	"	"	"
		"	51	4.5 V					0.5 V		"								"	I1b	"	"	"
		"	52	4.5 V							"		0.5 V						"	I1d	"	"	"
		"	53	0.0 V							"			0.5 V					"	I0d	"	"	"
		"	54	4.5 V							"					0.5 V			"	I1c	"	"	"
		"	55	0.0 V							"						0.5 V		"	I0c	"	"	"
		"	56			0.0 V			0.0 V		"		0.0 V			0.0 V		0.5 V	"	$\overline{E}$	"	"	"
	I_{OS}	3011	57	0.0 V	4.5 V		0.0 V				"							0.0 V	"	Za	-60	-150	"
		"	58	"				4.5 V		0.0 V	"							"	"	Zb	"	"	"
		"	59	"							"	0.0 V		4.5 V				"	"	Zd	"	"	"
		"	60	"							"				0.0 V		4.5 V	"	"	Zc	"	"	"
	I_{OD}		61				2.5 V				"							5.5 V	4.5 V	Za	60 5/		"
			62							2.5 V	"							"	"	Zb	"		"
			63								"	2.5 V						"	"	Zd	"		"
			64								"				2.5 V			"	"	Zc	"		"
	I_{CC}	3005	65	4.5 V	4.5 V	4.5 V		4.5 V	4.5 V		"		4.5 V	4.5 V		4.5 V	4.5 V	4.5 V	5.5 V	V_{CC}		23	"
2	Same tests, terminal conditions, and limits as subgroup 1, except T_C = +125°C and V_{IC} tests are omitted.																						
3	Same tests, terminal conditions, and limits as subgroup 1, except T_C = -55°C and V_{IC} tests are omitted.																						
7 Tc = 25°C	Func-tional test 3/	3014	66	A	A	A	L	A	A	L	GND	L	A	A	L	A	A	A	4/	All outputs			
		"	67	B	"	A	L	"	A	L	"	L	A	"	L	A	"	A	"				
		"	68	B	"	B	H	"	B	H	"	H	B	"	H	B	"	B	"				
		"	69	A	"	B	L	"	B	L	"	L	B	"	L	B	"	"	"				
		"	70	B	B	A	L	B	A	L	"	L	A	B	L	A	B	"	"				
		"	71	A	B	A	H	B	A	H	"	H	A	B	H	A	B	"	"				
8	Same tests, terminal conditions, and limits as for subgroup 7, except T_C = +125°C and T_C = -55°C.																						
9 T_C = 25°C	t_{PLH1}	3003 Fig. 4	72	0.0 V	IN		OUT				GND							0.0 V	5.0 V	I0a to Za	2.5	6.0	ns
			73	2.7 V		IN	OUT				"							"	"	I1a to Za	"	"	"
		"	74	0.0 V				IN		OUT	"							"	"	I0b to Zb	"	"	"
		"	75	2.7 V					IN	OUT	"							"	"	I1b to Zb	"	"	"
		"	76	2.7 V							"	OUT	IN					"	"	I1d to Zd	"	"	"
		"	77	0.0 V							"	OUT		IN				"	"	I0d to Zd	"	"	"
		"	78	2.7 V							"				OUT	IN		"	"	I1c to Zc	"	"	"
		"	79	0.0 V							"				OUT		IN	"	"	I0c to Zc	"	"	"
	t_{PHL1}	"	80	0.0 V	IN		OUT				"							"	"	I0a to Za	"	5.5	"
		"	81	2.7 V		IN	OUT				"							"	"	I1a to Za	"	"	"
		"	82	0.0 V				IN		OUT	"							"	"	I0b to Zb	"	"	"
		"	83	2.7 V					IN	OUT	"							"	"	I1b to Zb	"	"	"
		"	84	2.7 V							"	OUT	IN					"	"	I1d to Zd	"	"	"
		"	85	0.0 V							"	OUT		IN				"	"	I0d to Zd	"	"	"
		"	86	2.7 V							"				OUT	IN		"	"	I1c to Zc	"	"	"
		"	87	0.0 V							"				OUT		IN	"	"	I0c to Zc	"	"	"
	t_{PLH5}	"	88	2.7 V		2.7 V	OUT				"							IN	"	$\overline{E}$ to Za	5.0	9.5	"
		"	89	"					2.7 V	OUT	"							"	"	$\overline{E}$ to Zb	"	"	"
		"	90	"							"	OUT	2.7 V					"	"	$\overline{E}$ to Zd	"	"	"
		"	91	"							"				OUT	2.7 V		"	"	$\overline{E}$ to Zc	"	"	"

See footnotes at end of table.

TABLE III. Group A inspection for device type 03.

Terminal conditions (pins not designated may be high ≥ 2.0 V; low ≤ 0.8 V; or open).

Subgroup	Symbol	MIL-STD-883 method	Cases E, F	1	2	3	4	5	6	7	8	9	10	11	12	13	14	15	16	Measured terminal	Limits		Unit
			Case 2 1/	2	3	4	5	7	8	9	10	12	13	14	15	17	18	19	20				
			Test no.	S	I0a	I1a	Za	I0b	I1b	Zb	GND	Zd	I1d	I0d	Zc	I1c	I0c	$\overline{E}$	V_{CC}		Min	Max	
9	t_{PHL5}	3003	92	0.0 V	2.7 V		OUT				GND							IN	5.0 V	$\overline{E}$ to Za	2.5	6.5	ns
T_C = 25°C		Fig. 4	93	"				2.7 V		OUT	"							"	"	$\overline{E}$ to Zb	"	"	"
		"	94	"							"	OUT		2.7 V				"	"	$\overline{E}$ to Zd	"	"	"
		"	95	"							"				OUT		2.7 V	"	"	$\overline{E}$ to Zc	"	"	"
	t_{PLH3}	"	96	IN	2.7 V	0.0 V	OUT				"							0.0 V	"	S to Za	4.0	10.0	"
		"	97	"				2.7 V	0.0 V	OUT	"							"	"	S to Zb	"	"	"
		"	98	"							"	OUT	0.0 V	2.7 V				"	"	S to Zd	"	"	"
		"	99	"							"				OUT	0.0 V	2.7 V	"	"	S to Zc	"	"	"
	t_{PHL3}	"	100	"	0.0 V	2.7 V	OUT				"							"	"	S to Za	3.0	7.0	"
		"	101	"				0.0 V	2.7 V	OUT	"							"	"	S to Zb	"	"	"
		"	102	"							"	OUT	2.7 V	0.0 V				"	"	S to Zd	"	"	"
		"	103	"							"				OUT	2.7 V	0.0 V	"	"	S to Zc	"	"	"
10	Same tests and terminal conditions as subgroup 9, except T_C = +125°C and use limits from table I.																						
11	Same tests, terminal conditions and limits as for subgroup 10, except T_C = -55°C.																						

1/ For case 2 pins not referenced are N/C.

2/ I_{IL} limits shall be as follows:

Test	Min/Max limits in mA for circuit			
	A	B	C	D
I_{IL}	-.25/-.60	-.03/-.60	-.03/-.60	0.0/-0.30

3/ A = 2.5 V, B = 0.5 V. H ≥ 1.5 V, L ≤ 1.5 V.

4/ Perform function sequence at V_{CC} = 4.5 V and repeat at V_{CC} = 5.5 V.

5/ I_{OD} minimum limit for circuit D shall be 35 mA.

TABLE III. Group A inspection for device type 04.

Terminal conditions (pins not designated may be high ≥ 2.0 V; low ≤ 0.8 V; or open).

Subgroup	Symbol	MIL-STD-883 method	Cases E, F	1	2	3	4	5	6	7	8	9	10	11	12	13	14	15	16	Measured terminal	Limits		Unit
			Case 2 1/	2	3	4	5	7	8	9	10	12	13	14	15	17	18	19	20				
			Test no.	S	I0a	I1a	$\overline{Z}$ a	I0b	I1b	$\overline{Z}$ b	GND	$\overline{Z}$ d	I1d	I0d	$\overline{Z}$ c	I1c	I0c	$\overline{E}$	V_{CC}		Min	Max	
1	V_{OL}	3007	1	0.8 V	2.0 V	0.8 V	20 mA				GND							0.8 V	4.5 V	$\overline{Z}$ a		0.5	V
Tc = 25°C		"	2	2.0 V	0.8 V	2.0 V	20 mA				"							"	"	$\overline{Z}$ a		"	"
		"	3	0.8 V				2.0 V	0.8 V	20 mA	"							"	"	$\overline{Z}$ b		"	"
		"	4	2.0 V				0.8 V	2.0 V	20 mA	"							"	"	$\overline{Z}$ b		"	"
		"	5	0.8 V							"	20 mA	2.0 V	0.8 V				"	"	$\overline{Z}$ d		"	"
		"	6	2.0 V							"	20 mA	0.8 V	2.0 V				"	"	$\overline{Z}$ d		"	"
		"	7	0.8 V							"				20 mA	2.0 V	0.8 V	"	"	$\overline{Z}$ c		"	"
		"	8	2.0 V							"				20 mA	0.8 V	2.0 V	"	"	$\overline{Z}$ c		"	"
	V_{OH}	3006	9	0.8 V	0.8 V	2.0 V	-1 mA				"							"	"	$\overline{Z}$ a	2.5		"
		"	10	2.0 V	2.0 V	0.8 V	-1 mA				"							"	"	$\overline{Z}$ a	"		"
		"	11	0.8 V				0.8 V	2.0 V	-1 mA	"							"	"	$\overline{Z}$ b	"		"
		"	12	2.0 V				2.0 V	0.8 V	-1 mA	"							"	"	$\overline{Z}$ b	"		"
		"	13	0.8 V							"	-1 mA	0.8 V	2.0 V				"	"	$\overline{Z}$ d	"		"
		"	14	2.0 V							"	-1 mA	2.0 V	0.8 V				"	"	$\overline{Z}$ d	"		"
		"	15	0.8 V							"				-1 mA	0.8 V	2.0 V	"	"	$\overline{Z}$ c	"		"
		"	16	2.0 V							"				-1 mA	2.0 V	0.8 V	"	"	$\overline{Z}$ c	"		"
	V_{IC}		17	-18 mA							"								"	S		-1.2	"
			18		-18 mA						"								"	I0a		"	"
			19			-18 mA					"								"	I1a		"	"
			20					-18 mA			"								"	I0b		"	"
			21						-18 mA		"								"	I1b		"	"
			22								"		-18 mA						"	I1d		"	"
			23								"			-18 mA					"	I0d		"	"
			24								"					-18 mA			"	I1c		"	"
			25								"						-18 mA		"	I0c		"	"
			26								"							-18 mA	"	$\overline{E}$		"	"
	I_{IH1}	3010	27	2.7 V							"							4.5 V	5.5 V	S		20	μA
		"	28	4.5 V	2.7 V						"							"	"	I0a		"	"
		"	29	0.0 V		2.7 V					"							"	"	I1a		"	"
		"	30	4.5 V				2.7 V			"							"	"	I0b		"	"
		"	31	0.0 V					2.7 V		"							"	"	I1b		"	"
		"	32	0.0 V							"		2.7 V					"	"	I1d		"	"
		"	33	4.5 V							"			2.7 V				"	"	I0d		"	"
		"	34	0.0 V							"					2.7 V		"	"	I1c		"	"
		"	35	4.5 V							"						2.7 V	"	"	I0c		"	"
		"	36								"							2.7 V	"	$\overline{E}$		"	"
	I_{IH2}	"	37	7.0 V							"							4.5 V	"	S		100	"
		"	38	4.5 V	7.0 V						"							"	"	I0a		"	"
		"	39	0.0 V		7.0 V					"							"	"	I1a		"	"
		"	40	4.5 V				7.0 V			"							"	"	I0b		"	"
		"	41	0.0 V					7.0 V		"							"	"	I1b		"	"
		"	42	0.0 V							"		7.0 V					"	"	I1d		"	"
		"	43	4.5 V							"			7.0 V				"	"	I0d		"	"
		"	44	0.0 V							"					7.0 V		"	"	I1c		"	"
		"	45	4.5 V							"						7.0 V	"	"	I0c		"	"
		"	46								"							7.0 V	"	$\overline{E}$		"	"

See footnotes at end of table.

TABLE III. Group A inspection for device type 04.

Terminal conditions (pins not designated may be high ≥ 2.0 V; low ≤ 0.8 V; or open).

Subgroup	Symbol	MIL-STD-883 method	Cases E, F	1	2	3	4	5	6	7	8	9	10	11	12	13	14	15	16	Measured terminal	Limits		Unit
			Case 2 1/	2	3	4	5	7	8	9	10	12	13	14	15	17	18	19	20				
			Test no.	S	I0a	I1a	$\overline{Z}$ a	I0b	I1b	$\overline{Z}$ b	GND	$\overline{Z}$ d	I1d	I0d	$\overline{Z}$ c	I1c	I0c	$\overline{E}$	V_{CC}		Min	Max	
1 Tc = 25°C	I_{IL1}	3009	47	0.5 V							GND								5.5 V	S	2/	2/	mA
		"	48	0.0 V	0.5 V						"								"	I0a	"	"	"
		"	49	4.5 V		0.5 V					"								"	I1a	"	"	"
		"	50	0.0 V				0.5 V			"								"	I0b	"	"	"
		"	51	4.5 V					0.5 V		"								"	I1b	"	"	"
		"	52	4.5 V							"		0.5 V						"	I1d	"	"	"
		"	53	0.0 V							"			0.5 V					"	I0d	"	"	"
		"	54	4.5 V							"					0.5 V			"	I1c	"	"	"
		"	55	0.0 V							"						0.5 V		"	I0c	"	"	"
		"	56								"		0.0 V			0.0 V		0.5 V	"	$\overline{E}$	"	"	"
	I_{OS}	3011	57	0.0 V	0.0 V	4.5 V	0.0 V				"							0.0 V	"	$\overline{Z}$ a	-60	-150	"
		"	58	"				0.0 V	4.5 V	0.0 V	"							"	"	$\overline{Z}$ b	"	"	"
		"	59	"							"	0.0 V	4.5 V	0.0 V				"	"	$\overline{Z}$ d	"	"	"
		"	60	"							"				0.0 V	4.5 V	0.0 V	"	"	$\overline{Z}$ c	"	"	"
	I_{OD}		61	"	5.5 V		2.5 V				"							5.5 V	"	$\overline{Z}$ a	60		"
			62	"				5.5 V		2.5 V	"							"	"	$\overline{Z}$ b	"		"
			63	"							"	2.5 V		5.5 V				"	"	$\overline{Z}$ d	"		"
			64	"							"				2.5 V		5.5 V	"	"	$\overline{Z}$ c	"		"
	I_{CC}	3005	65	4.5 V	4.5 V	4.5 V		4.5 V	4.5 V		"		4.5 V	4.5 V		4.5 V	4.5 V	4.5 V	"	V_{CC}		15	"
2	Same tests, terminal conditions, and limits as subgroup 1, except T_C = +125°C and V_{IC} tests are omitted.																						
3	Same tests, terminal conditions, and limits as subgroup 1, except T_C = -55°C and V_{IC} tests are omitted.																						
7 Tc = 25°C	Func-tional test 3/	3014	66	A	A	A	H	A	A	H	GND	H	A	A	H	A	A	A	4/	All outputs			
		"	67	B	"	A	H	"	A	H	"	H	A	"	H	A	"	A	"				
		"	68	B	"	B	L	"	B	L	"	L	B	"	L	B	"	B	"				
		"	69	A	"	B	H	"	B	H	"	H	B	"	H	B	"	"	"				
		"	70	B	B	A	H	B	A	H	"	H	A	B	H	A	B	"	"				
		"	71	A	B	A	L	B	A	L	"	L	A	B	L	A	B	"	"				
8	Same tests, terminal conditions, and limits as for subgroup 7, except T_C = +125°C and T_C = -55°C.																						
9 T_C = 25°C	t_{PLH2}	3003 Fig. 4	72	0.0 V	IN		OUT				GND							0.0 V	5.0 V	I0a to $\overline{Z}$ a	2.5	5.9	ns
			73	2.7 V		IN	OUT				"							"	"	I1a to $\overline{Z}$ a	"	"	"
		"	74	0.0 V				IN		OUT	"							"	"	I0b to $\overline{Z}$ b	"	"	"
		"	75	2.7 V					IN	OUT	"							"	"	I1b to $\overline{Z}$ b	"	"	"
		"	76	2.7 V							"	OUT	IN					"	"	I1d to $\overline{Z}$ d	"	"	"
		"	77	0.0 V							"	OUT		IN				"	"	I0d to $\overline{Z}$ d	"	"	"
		"	78	2.7 V							"				OUT	IN		"	"	I1c to $\overline{Z}$ c	"	"	"
		"	79	0.0 V							"				OUT		IN	"	"	I0c to $\overline{Z}$ c	"	"	"

See footnotes at end of table.

TABLE III. Group A inspection for device type 04.

Terminal conditions (pins not designated may be high ≥ 2.0 V; low ≤ 0.8 V; or open).

Subgroup	Symbol	MIL-STD-883 method	Cases E, F	1	2	3	4	5	6	7	8	9	10	11	12	13	14	15	16	Measured terminal	Limits		Unit
			Case 2 1/	2	3	4	5	7	8	9	10	12	13	14	15	17	18	19	20				
			Test no.	S	I0a	I1a	$\overline{Z}$ a	I0b	I1b	$\overline{Z}$ b	GND	$\overline{Z}$ d	I1d	I0d	$\overline{Z}$ c	I1c	I0c	$\overline{E}$	V_{CC}		Min	Max	
9	t_{PHL2}	3003	80	0.0 V	IN		OUT				GND							0.0 V	5.0 V	I0a to $\overline{Z}$ a	1.5	4.0	ns
T_C = 25°C		Fig. 4	81	2.7 V		IN	OUT				"							"	"	I1a to $\overline{Z}$ a	"	"	"
		"	82	0.0 V				IN		OUT	"							"	"	I0b to $\overline{Z}$ b	"	"	"
		"	83	2.7 V					IN	OUT	"							"	"	I1b to $\overline{Z}$ b	"	"	"
		"	84	2.7 V							"	OUT	IN					"	"	I1d to $\overline{Z}$ d	"	"	"
		"	85	0.0 V							"	OUT		IN				"	"	I0d to $\overline{Z}$ d	"	"	"
		"	86	2.7 V							"				OUT	IN		"	"	I1c to $\overline{Z}$ c	"	"	"
		"	87	0.0 V							"				OUT		IN	"	"	I0c to $\overline{Z}$ c	"	"	"
	t_{PLH6}	"	88	2.7 V		2.7 V	OUT				"							IN	"	$\overline{E}$ to $\overline{Z}$ a	2.5	6.0	"
		"	89	"					2.7 V	OUT	"							"	"	$\overline{E}$ to $\overline{Z}$ b	"	"	"
		"	90	"							"	OUT	2.7 V					"	"	$\overline{E}$ to $\overline{Z}$ d	"	"	"
		"	91	"							"				OUT	2.7 V		"	"	$\overline{E}$ to $\overline{Z}$ c	"	"	"
	t_{PHL6}	"	92	0.0 V	2.7 V		OUT				"							"	"	$\overline{E}$ to $\overline{Z}$ a	2.0	7.5	"
		"	93	"				2.7 V		OUT	"							"	"	$\overline{E}$ to $\overline{Z}$ b	"	"	"
		"	94	"							"	OUT		2.7 V				"	"	$\overline{E}$ to $\overline{Z}$ d	"	"	"
		"	95	"							"				OUT		2.7 V	"	"	$\overline{E}$ to $\overline{Z}$ c	"	"	"
	t_{PLH3}	"	96	IN	0.0 V	2.7 V	OUT				"							0.0 V	"	S to $\overline{Z}$ a	3.0	9.5	"
		"	97	"				0.0 V	2.7 V	OUT	"							"	"	S to $\overline{Z}$ b	"	"	"
		"	98	"							"	OUT	2.7 V	0.0 V				"	"	S to $\overline{Z}$ d	"	"	"
		"	99	"							"				OUT	2.7 V	0.0 V	"	"	S to $\overline{Z}$ c	"	"	"
	t_{PHL4}	"	100	"	2.7 V	0.0 V	OUT				"							"	"	S to $\overline{Z}$ a	2.5	6.5	"
		"	101	"				2.7 V	0.0 V	OUT	"							"	"	S to $\overline{Z}$ b	"	"	"
		"	102	"							"	OUT	0.0 V	2.7 V				"	"	S to $\overline{Z}$ d	"	"	"
		"	103	"							"				OUT	0.0 V	2.7 V	"	"	S to $\overline{Z}$ c	"	"	"
10	Same tests and terminal conditions as subgroup 9, except T_C = +125°C and use limits from table I.																						
11	Same tests, terminal conditions and limits as for subgroup 10, except T_C = -55°C.																						

1/ For case 2 pins not referenced are N/C.

2/ I_{IL} limits shall be as follows:

Test	Min/Max limits in mA for circuit			
	A	B	C	D
I_{IL}	-.25/-.60	-.03/-.60	-.03/-.60	0.0/-0.30

3/ A = 2.5 V minimum, B = 0.5 V. H ≥ 1.5 V, L ≤ 1.5 V.

4/ Perform function sequence at V_{CC} = 4.5 V and repeat at V_{CC} = 5.5 V.

TABLE III. Group A inspection for device type 05.

Terminal conditions (pins not designated may be high ≥ 2.0 V; low ≤ 0.8 V; or open).

Subgroup	Symbol	MIL-STD-883 method	Cases E, F	1	2	3	4	5	6	7	8	9	10	11	12	13	14	15	16	Measured terminal	Limits		Unit
			Case 2 1/	2	3	4	5	7	8	9	10	12	13	14	15	17	18	19	20				
			Test no.	I3	I2	I1	I0	Z	$\overline{Z}$	$\overline{QE}$	GND	S2	S1	S0	I7	I6	I5	I4	V_{CC}		Min	Max	
1	V_{OL}	3007	1				2.0 V		20 mA	0.8 V	GND	0.8 V	0.8 V	0.8 V					4.5 V	$\overline{Z}$		0.5	V
Tc = 25°C		"	2			2.0 V			"	"	"	"	0.8 V	2.0 V					"	"		"	"
		"	3		2.0 V				"	"	"	"	2.0 V	0.8 V					"	"		"	"
		"	4	2.0 V					"	"	"	"	2.0 V	2.0 V					"	"		"	"
		"	5						"	"	"	2.0 V	0.8 V	0.8 V				2.0 V	"	"		"	"
		"	6						"	"	"	"	0.8 V	2.0 V			2.0 V		"	"		"	"
		"	7						"	"	"	"	2.0 V	0.8 V		2.0 V			"	"		"	"
		"	8						"	"	"	"	2.0 V	2.0 V	2.0 V				"	"		"	"
		"	9				0.8 V	20 mA		"	"	0.8 V	0.8 V	0.8 V					"	Z		"	"
	V_{OH}	3006	10				2.0 V	-3.0 mA		0.8 V	"	0.8 V	0.8 V	0.8 V					"	Z	2.4		"
		"	11				0.8 V		-3.0 mA	"	"	"	"	0.8 V					"	$\overline{Z}$	"		"
		"	12			0.8 V			"	"	"	"	"	2.0 V					"	"	"		"
		"	13		0.8 V				"	"	"	"	2.0 V	0.8 V					"	"	"		"
		"	14	0.8 V					"	"	"	"	2.0 V	2.0 V					"	"	"		"
		"	15						"	"	"	2.0 V	0.8 V	0.8 V				0.8 V	"	"	"		"
		"	16						"	"	"	"	0.8 V	2.0 V			0.8 V		"	"	"		"
		"	17						"	"	"	"	2.0 V	0.8 V		0.8 V			"	"	"		"
		"	18						"	"	"	"	2.0 V	2.0 V	0.8 V				"	"	"		"
	V_{IC}		19	-18 mA							"								"	I3		-1.2	"
			20		-18 mA						"								"	I2		"	"
			21			-18 mA					"								"	I1		"	"
			22				-18 mA				"								"	I0		"	"
			23							-18 mA	"								"	$\overline{QE}$		"	"
			24								"	-18 mA							"	S2		"	"
			25								"		-18 mA						"	S1		"	"
			26								"			-18 mA					"	S0		"	"
			27								"				-18 mA				"	I7		"	"
			28								"					-18 mA			"	I6		"	"
			29								"						-18 mA		"	I5		"	"
			30								"							-18 mA	"	I4		"	"
	I_{IH1}	3010	31	2.7 V						4.5 V	"	4.5 V	0.0 V	0.0 V					5.5 V	I3		20	µA
		"	32		2.7 V					"	"	"	0.0 V	4.5 V					"	I2		"	"
		"	33			2.7 V				"	"	"	4.5 V	0.0 V					"	I1		"	"
		"	34				2.7 V			"	"	"	4.5 V	4.5 V					"	I0		"	"
		"	35							2.7 V	"								"	$\overline{QE}$		"	"
		"	36								"	2.7 V							"	S2		"	"
		"	37								"		2.7 V						"	S1		"	"
		"	38								"			2.7 V					"	S0		"	"
		"	39							4.5 V	"	0.0 V	0.0 V	0.0 V	2.7 V				"	I7		"	"
		"	40								"	"	0.0 V	4.5 V		2.7 V			"	I6		"	"
		"	41								"	"	4.5 V	0.0 V			2.7 V		"	I5		"	"
		"	42								"	"	4.5 V	4.5 V				2.7 V	"	I4		"	"
	I_{IH2}	"	43	7.0 V							"	4.5 V	0.0 V	0.0 V					"	I3		100	"
		"	44		7.0 V						"	"	0.0 V	4.5 V					"	I2		"	"
		"	45			7.0 V					"	"	4.5 V	0.0 V					"	I1		"	"
		"	46				7.0 V				"	"	4.5 V	4.5 V					"	I0		"	"
		"	47							7.0 V	"								"	$\overline{QE}$		"	"
		"	48								"	7.0 V							"	S2		"	"
		"	49								"		7.0 V						"	S1		"	"
		"	50								"			7.0 V					"	S0		"	"
		"	51								"	0.0 V	0.0 V	0.0 V	7.0 V				"	I7		"	"
		"	52								"	"	0.0 V	4.5 V		7.0 V			"	I6		"	"
		"	53								"	"	4.5 V	0.0 V			7.0 V		"	I5		"	"
		"	54								"	"	4.5 V	4.5 V				7.0 V	"	I4		"	"

See footnotes at end of table.

TABLE III. Group A inspection for device type 05.

Terminal conditions (pins not designated may be high ≥ 2.0 V; low ≤ 0.8 V; or open).

Subgroup	Symbol	MIL-STD-883 method	Cases E, F	1	2	3	4	5	6	7	8	9	10	11	12	13	14	15	16	Measured terminal	Limits		Unit
			Case 2 1/	2	3	4	5	7	8	9	10	12	13	14	15	17	18	19	20				
			Test no.	I3	I2	I1	I0	Z	$\overline{Z}$	$\overline{QE}$	GND	S2	S1	S0	I7	I6	I5	I4	V_{CC}		Min	Max	
1 Tc = 25°C	I_{IL}	3009	55	0.5 V						0.0 V	GND	0.0 V	4.5 V	4.5 V					5.5 V	I3	2/	2/	mA
		"	56		0.5 V					"	"	"	4.5 V	0.0 V					"	I2	"	"	"
		"	57			0.5 V				"	"	"	0.0 V	4.5 V					"	I1	"	"	"
		"	58				0.5 V			"	"	"	0.0 V	0.0 V					"	I0	"	"	"
		"	59							0.5 V	"								"	$\overline{QE}$	"	"	"
		"	60							0.0 V	"	0.5 V							"	S2	"	"	"
		"	61								"		0.5 V						"	S1	"	"	"
		"	62								"			0.5 V					"	S0	"	"	"
		"	63							0.0 V	"	4.5 V	4.5 V	4.5 V	0.5 V				"	I7	"	"	"
		"	64							"	"	"	4.5 V	0.0 V		0.5 V			"	I6	"	"	"
		"	65							"	"	"	0.0 V	4.5 V			0.5 V		"	I5	"	"	
		"	66							"	"	"	0.0 V	0.0 V				0.5 V	"	I4	"	"	
	I_{OZH}		67				0.0 V	2.7 V		4.5 V	"	0.0 V	0.0 V	0.0 V					"	Z		50	µA
			68				4.5 V		2.7 V	"	"	"	"	"					"	$\overline{Z}$		50	"
	I_{OZL}		69				4.5 V	0.5 V		"	"	"	"	"					"	Z		-50	"
			70				0.0 V		0.5 V	"	"	"	"	"					"	$\overline{Z}$		-50	"
	I_{OS}	3011	71				4.5 V	0.0 V		0.0 V	"	"	"	"					"	Z	-60	-150	mA
		3011	72				0.0 V		0.0 V	"	"	"	"	"					"	$\overline{Z}$	-60	-150	"
	I_{OD}		73				0.0 V	2.5 V		"	"	"	"	"					4.5 V	Z	35		"
			74				5.5 V		2.5 V	"	"	"	"	"					4.5 V	$\overline{Z}$	35		"
	I_{CC}	3005	75	4.5 V	4.5 V	4.5 V	4.5 V			"	"	4.5 V	4.5 V	4.5 V	4.5 V	4.5 V	4.5 V	4.5 V	5.5 V	V_{CC}		22	"
	I_{CCZ}	3005	76	4.5 V	4.5 V	4.5 V	4.5 V			4.5 V	"	4.5 V	4.5 V	4.5 V	4.5 V	4.5 V	4.5 V	4.5 V	5.5 V	V_{CC}		24	"
2	Same tests, terminal conditions, and limits as subgroup 1, except T_C = +125°C and V_{IC} tests are omitted.																						
3	Same tests, terminal conditions, and limits as subgroup 1, except T_C = -55°C and V_{IC} tests are omitted.																						
7 Tc = 25°C	Func-tional test 3/	3014	77	B	B	B	A	H	L	B	GND	B	B	B	B	B	B	B	4/	All outputs			
		"	78	"	B	A	B	"	"	"	"	"	B	A	"	"	"	"	"				
		"	79	"	A	B	"	"	"	"	"	"	A	B	"	"	"	"	"				
		"	80	A	B	"	"	"	"	"	"	"	A	A	"	"	"	"	"				
		"	81	B	"	"	"	"	"	"	"	A	B	B	"	"	"	A	"				
		"	82	"	"	"	"	"	"	"	"	"	B	A	"	"	A	B	"				
		"	83	"	"	"	"	"	"	"	"	"	A	B	"	A	B	"	"				
		"	84	"	"	"	"	"	"	"	"	"	A	A	A	B	B	"	"				
		"	85	A	A	A	"	L	H	"	"	B	B	B	"	A	A	A	"				
		"	86	"	A	B	"	"	"	"	"	"	B	A	"	"	"	"	"				
		"	87	"	B	A	"	"	"	"	"	"	A	B	"	"	"	"	"				
		"	88	B	A	"	"	"	"	"	"	"	A	A	"	"	"	"	"				
		"	89	A	"	"	"	"	"	"	"	A	B	B	"	"	"	B	"				
		"	90	"	"	"	"	"	"	"	"	"	A	B	"	B	"	"	"				
		"	91	"	"	"	"	"	"	"	"	"	A	A	B	"	"	"	"				
		"	92	"	"	"	"	"	"	"	"	"	B	A	B	"	B	"	"				
8	Same tests, terminal conditions, and limits as for subgroup 7, except T_C = +125°C and T_C = -55°C.																						
9 Tc = 25°C	t_{PLH1}	3003 Fig. 4	93				IN	OUT		0.0 V	GND	0.0 V	0.0 V	0.0 V					5.0 V	I0 to Z	2.5	7.0	ns
			94			IN		"		"	"	"	0.0 V	2.7 V					"	I1 to Z	"	"	"
		"	95		IN			"		"	"	"	2.7 V	0.0 V					"	I2 to Z	"	"	"
		"	96	IN				"		"	"	"	2.7 V	2.7 V					"	I3 to Z	"	"	"
		"	97					"		"	"	2.7 V	0.0 V	0.0 V				IN	"	I4 to Z	"	"	"
		"	98					"		"	"	"	0.0 V	2.7 V			IN		"	I5 to Z	"	"	"
		"	99					"		"	"	"	2.7 V	0.0 V		IN			"	I6 to Z	"	"	"
		"	100					"		"	"	"	2.7 V	2.7 V	IN				"	I7 to Z	"	"	"

See footnotes at end of table.

TABLE III. Group A inspection for device type 05.

Terminal conditions (pins not designated may be high ≥ 2.0 V; low ≤ 0.8 V; or open).

Subgroup	Symbol	MIL-STD-883 method	Cases E, F	1	2	3	4	5	6	7	8	9	10	11	12	13	14	15	16	Measured terminal	Limits		Unit
			Case 2 1/	2	3	4	5	7	8	9	10	12	13	14	15	17	18	19	20				
			Test no.	I3	I2	I1	I0	Z	$\overline{Z}$	$\overline{QE}$	GND	S2	S1	S0	I7	I6	I5	I4	V_{CC}		Min	Max	
9 Tc = 25°C	t_{PHL1}	3003 Fig. 4	101				IN	OUT		0.0 V	GND	0.0 V	0.0 V	0.0 V					5.0 V	I0 to Z	3.5	7.0	ns
			102			IN		"		"	"	"	0.0 V	2.7 V					"	I1 to Z	"	"	"
		"	103		IN			"		"	"	"	2.7 V	0.0 V					"	I2 to Z	"	"	"
		"	104	IN				"		"	"	"	2.7 V	2.7 V					"	I3 to Z	"	"	"
		"	105					"		"	"	2.7 V	0.0 V	0.0 V				IN	"	I4 to Z	"	"	"
		"	106					"		"	"	"	0.0 V	2.7 V			IN		"	I5 to Z	"	"	"
		"	107					"		"	"	"	2.7 V	0.0 V		IN			"	I6 to Z	"	"	"
		"	108					"		"	"	"	2.7 V	2.7 V	IN				"	I7 to Z	"	"	"
	t_{PLH2}	"	109				IN		OUT	"	"	0.0 V	0.0 V	0.0 V					"	I0 to $\overline{Z}$	2.5	6.5	"
		"	110			IN			"	"	"	"	0.0 V	2.7 V					"	I1 to $\overline{Z}$	"	"	"
		"	111		IN				"	"	"	"	2.7 V	0.0 V					"	I2 to $\overline{Z}$	"	"	"
		"	112	IN					"	"	"	"	2.7 V	2.7 V					"	I3 to $\overline{Z}$	"	"	"
		"	113						"	"	"	2.7 V	0.0 V	0.0 V				IN	"	I4 to $\overline{Z}$	"	"	"
		"	114						"	"	"	"	0.0 V	2.7 V			IN		"	I5 to $\overline{Z}$	"	"	"
		"	115						"	"	"	"	2.7 V	0.0 V		IN			"	I6 to $\overline{Z}$	"	"	"
		"	116						"	"	"	"	2.7 V	2.7 V	IN				"	I7 to $\overline{Z}$	"	"	"
	t_{PHL2}	"	117				IN		"	"	"	0.0 V	0.0 V	0.0 V					"	I0 to $\overline{Z}$	1.0	4.0	"
		"	118			IN			"	"	"	"	0.0 V	2.7 V					"	I1 to $\overline{Z}$	"	"	"
		"	119		IN				"	"	"	"	2.7 V	0.0 V					"	I2 to $\overline{Z}$	"	"	"
		"	120	IN					"	"	"	"	2.7 V	2.7 V					"	I3 to $\overline{Z}$	"	"	"
		"	121						"	"	"	2.7 V	0.0 V	0.0 V				IN	"	I4 to $\overline{Z}$	"	"	"
		"	122						"	"	"	"	0.0 V	2.7 V			IN		"	I5 to $\overline{Z}$	"	"	"
		"	123						"	"	"	"	2.7 V	0.0 V		IN			"	I6 to $\overline{Z}$	"	"	"
		"	124						"	"	"	"	2.7 V	2.7 V	IN				"	I7 to $\overline{Z}$	"	"	"
	t_{PLH3}	"	125			2.7 V	0.0 V	OUT		"	"	0.0 V	0.0 V	IN					"	S0 to Z	4.5	10.5	"
		"	126		2.7 V		"	"		"	"	0.0 V	IN	0.0 V					"	S1 to Z	"	"	"
		"	127				"	"		"	"	IN	0.0 V	0.0 V				2.7 V	"	S2 to Z	"	"	"
	t_{PHL3}	"	128			0.0 V	2.7 V	"		"	"	0.0 V	0.0 V	IN					"	S0 to Z	4.0	8.5	"
		"	129		0.0 V		"	"		"	"	0.0 V	IN	0.0 V					"	S1 to Z	"	"	"
		"	130				"	"		"	"	IN	0.0 V	0.0 V				0.0 V	"	S2 to Z	"	"	"
	t_{PLH4}	"	131			0.0 V	"		OUT	"	"	0.0 V	0.0 V	IN					"	S0 to $\overline{Z}$	3.5	9.0	"
		"	132		0.0 V		"		"	"	"	0.0 V	IN	0.0 V					"	S1 to $\overline{Z}$	"	"	"
		"	133				"		"	"	"	IN	0.0 V	0.0 V				0.0 V	"	S2 to $\overline{Z}$	"	"	"
	t_{PHL4}	"	134			2.7 V	0.0 V		"	"	"	0.0 V	0.0 V	IN					"	S0 to $\overline{Z}$	3.2	7.5	"
		"	135		2.7 V		"		"	"	"	0.0 V	IN	0.0 V					"	S1 to $\overline{Z}$	"	"	"
		"	136				"		"	"	"	IN	0.0 V	0.0 V				2.7 V	"	S2 to $\overline{Z}$	"	"	"

See footnotes at end of table.

TABLE III. Group A inspection for device type 05.

Terminal conditions (pins not designated may be high ≥ 2.0 V; low ≤ 0.8 V; or open).

Subgroup	Symbol	MIL-STD-883 method	Cases E, F	1	2	3	4	5	6	7	8	9	10	11	12	13	14	15	16	Measured terminal	Limits		Unit
			Case 2 1/	2	3	4	5	7	8	9	10	12	13	14	15	17	18	19	20				
			Test no.	I3	I2	I1	I0	Z	$\overline{Z}$	$\overline{QE}$	GND	S2	S1	S0	I7	I6	I5	I4	V_{CC}		Min	Max	
9	t_{PZH5}	3003	137				2.7 V	OUT		IN	GND	0.0 V	0.0 V	0.0 V					5.0 V	$\overline{QE}$ to Z	3.5	7.0	ns
Tc = 25°C	t_{PZH6}	Fig. 4	138				0.0 V		OUT	"	"	"	"	"					"	$\overline{QE}$ to $\overline{Z}$	2.5	6.0	"
	t_{PZL5}	"	139				0.0 V	OUT		"	"	"	"	"					"	$\overline{QE}$ to Z	3.5	7.5	"
	t_{PZL6}	"	140				2.7 V		OUT	"	"	"	"	"					"	$\overline{QE}$ to $\overline{Z}$	2.5	6.0	"
	t_{PHZ5}	"	141				2.7 V	OUT		"	"	"	"	"					"	$\overline{QE}$ to Z	2.0	5.5	"
	t_{PHZ6}	"	142				0.0 V		OUT	"	"	"	"	"					"	$\overline{QE}$ to $\overline{Z}$	2.5	5.5	"
	t_{PLZ5}	"	143				0.0 V	OUT		"	"	"	"	"					"	$\overline{QE}$ to Z	1.0	4.5	"
	t_{PLZ6}	"	144				2.7 V		OUT	"	"	"	"	"					"	$\overline{QE}$ to $\overline{Z}$	1.0	4.5	"
10	Same tests and terminal conditions as subgroup 9, except T_C = +125°C and for the following limits. t_{PLH1} = 2.5 to 9.0 ns; t_{PLH3} = 3.5 to 14.0 ns; t_{PZH5} = 3.0 to 8.5 ns; t_{PHZ5} = 2.0 to 5.5 ns t_{PLH2} = 2.5 to 8.5 ns; t_{PLH4} = 3.5 to 11.5 ns; t_{PZH6} = 2.0 to 7.0 ns; t_{PHZ6} = 2.0 to 6.0 ns t_{PHL1} = 3.5 to 9.0 ns; t_{PHL3} = 3.0 to 10.5 ns; t_{PZL5} = 2.5 to 9.0 ns; t_{PLZ5} = 1.0 to 5.5 ns t_{PHL2} = 1.0 to 6.0 ns; t_{PHL4} = 3.2 to 8.0 ns; t_{PZL6} = 2.5 to 7.5 ns; t_{PLZ6} = 1.0 to 5.0 ns																						
11	Same tests, terminal conditions and limits as for subgroup 10, except T_C = -55°C.																						

1/ For case 2 pins not referenced are N/C.

2/ I_{IL} limits shall be as follows:

Test	Min/Max limits in mA for circuit		
	A	B	C
I_{IL}	-.25/-.60	-.03/-.60	-.03/-.60

3/ A = 2.5 V, B = 0.5 V. H ≥ 1.5 V, L ≤ 1.5 V.

4/ Perform function sequence at V_{CC} = 4.5 V and repeat at V_{CC} = 5.5 V.

TABLE III. Group A inspection for device type 06.

Terminal conditions (pins not designated may be high ≥ 2.0 V; low ≤ 0.8 V; or open).

Subgroup	Symbol	MIL-STD-883 method	Cases E, F	1	2	3	4	5	6	7	8	9	10	11	12	13	14	15	16	Measured terminal	Limits		Unit
			Case 2 1/	2	3	4	5	7	8	9	10	12	13	14	15	17	18	19	20				
			Test no.	S	I0a	I1a	Za	I0b	I1b	Zb	GND	Zd	I1d	I0d	Zc	I1c	I0c	$\overline{OE}$	V_{CC}		Min	Max	
1 Tc = 25°C	V_{OL}	3007	1	0.8 V	0.8 V	2.0 V	20 mA				GND							0.8 V	4.5 V	Za		0.5	V
		"	2	2.0 V	2.0 V	0.8 V	20 mA				"							"	"	Za		"	"
		"	3	0.8 V				0.8 V	2.0 V	20 mA	"							"	"	Zb		"	"
		"	4	2.0 V				2.0 V	0.8 V	20 mA	"							"	"	Zb		"	"
		"	5	0.8 V							"	20 mA	2.0 V	0.8 V				"	"	Zd		"	"
		"	6	2.0 V							"	20 mA	0.8 V	2.0 V				"	"	Zd		"	"
		"	7	0.8 V							"				20 mA	2.0 V	0.8 V	"	"	Zc		"	"
		"	8	2.0 V							"				20 mA	0.8 V	2.0 V	"	"	Zc		"	"
	V_{OH}	3006	9	0.8 V	2.0 V	0.8 V	-3 mA				"							"	"	Za	2.4		"
		"	10	2.0 V	0.8 V	2.0 V	-3 mA				"							"	"	Za	"		"
		"	11	0.8 V				2.0 V	0.8 V	-3 mA	"							"	"	Zb	"		"
		"	12	2.0 V				0.8 V	2.0 V	-3 mA	"							"	"	Zb	"		"
		"	13	0.8 V							"	-3 mA	0.8 V	2.0 V				"	"	Zd	"		"
		"	14	2.0 V							"	-3 mA	2.0 V	0.8 V				"	"	Zd	"		"
		"	15	0.8 V							"				-3 mA	0.8 V	2.0 V	"	"	Zc	"		"
		"	16	2.0 V							"				-3 mA	2.0 V	0.8 V	"	"	Zc	"		"
	V_{IC}		17	-18 mA							"								"	S		-1.2	"
			18		-18 mA						"								"	I0a		"	"
			19			-18 mA					"								"	I1a		"	"
			20					-18 mA			"								"	I0b		"	"
			21						-18 mA		"								"	I1b		"	"
			22								"		-18 mA						"	I1d		"	"
			23								"			-18 mA					"	I0d		"	"
			24								"					-18 mA			"	I1c		"	"
			25								"						-18 mA		"	I0c		"	"
			26								"							-18 mA	"	$\overline{OE}$		"	"
	I_{IH1}	3010	27	2.7 V							"							4.5 V	5.5 V	S		20	µA
		"	28	4.5 V	2.7 V						"							"	"	I0a		"	"
		"	29	0.0 V		2.7 V					"							"	"	I1a		"	"
		"	30	4.5 V				2.7 V			"							"	"	I0b		"	"
		"	31	0.0 V					2.7 V		"							"	"	I1b		"	"
		"	32	0.0 V							"		2.7 V					"	"	I1d		"	"
		"	33	4.5 V							"			2.7 V				"	"	I0d		"	"
		"	34	0.0 V							"					2.7 V		"	"	I1c		"	"
		"	35	4.5 V							"						2.7 V	"	"	I0c		"	"
		"	36								"							2.7 V	"	$\overline{OE}$		"	"
	I_{IH2}	"	37	7.0 V							"							4.5 V	"	S		100	"
		"	38	4.5 V	7.0 V						"							"	"	I0a		"	"
		"	39	0.0 V		7.0 V					"							"	"	I1a		"	"
		"	40	4.5 V				7.0 V			"							"	"	I0b		"	"
		"	41	0.0 V					7.0 V		"							"	"	I1b		"	"
		"	42	0.0 V							"		7.0 V					"	"	I1d		"	"
		"	43	4.5 V							"			7.0 V				"	"	I0d		"	"
		"	44	0.0 V							"					7.0 V		"	"	I1c		"	"
		"	45	4.5 V							"						7.0 V	"	"	I0c		"	"
		"	46								"							7.0 V	"	$\overline{OE}$		"	"

See footnotes at end of table.

TABLE III. Group A inspection for device type 06.
Terminal conditions (pins not designated may be high ≥ 2.0 V; low ≤ 0.8 V; or open).

Subgroup	Symbol	MIL-STD-883 method	Cases E, F	1	2	3	4	5	6	7	8	9	10	11	12	13	14	15	16	Measured terminal	Limits		Unit
			Case 2 1/	2	3	4	5	7	8	9	10	12	13	14	15	17	18	19	20				
			Test no.	S	I0a	I1a	Za	I0b	I1b	Zb	GND	Zd	I1d	I0d	Zc	I1c	I0c	$\overline{OE}$	V_{CC}		Min	Max	
1 Tc = 25°C	I_{IL1}	3009	47	0.5 V							GND								5.5 V	S	2/	2/	mA
		"	48	0.0 V	0.5 V						"								"	I0a	"	"	"
		"	49	4.5 V		0.5 V					"								"	I1a	"	"	"
		"	50	0.0 V				0.5 V			"								"	I0b	"	"	"
		"	51	4.5 V					0.5 V		"								"	I1b	"	"	"
		"	52	4.5 V							"		0.5 V						"	I1d	"	"	"
		"	53	0.0 V							"			0.5 V					"	I0d	"	"	"
		"	54	4.5 V							"					0.5 V			"	I1c	"	"	"
		"	55	0.0 V							"						0.5 V		"	I0c	"	"	"
		"	56								"							0.5 V	"	$\overline{OE}$	"	"	"
	I_{OS}	3011	57	0.0 V	4.5 V		0.0 V				"							0.0 V	"	Za	-60	-150	"
		"	58	"				4.5 V		0.0 V	"							"	"	Zb	"	"	"
		"	59	"							"	0.0 V		4.5 V				"	"	Zd	"	"	"
		"	60	"							"				0.0 V		4.5 V	"	"	Zc	"	"	"
	I_{OD}		61	0.0 V	0.0 V		2.5 V				"							"	4.5 V	Za	35		"
			62					0.0 V		2.5 V	"							"	"	Zb	"		"
			63								"	2.5 V		0.0 V				"	"	Zd	"		"
			64								"				2.5 V		0.0 V	"	"	Zc	"		"
	I_{OZH}		65	4.5 V	4.5 V	4.5 V	2.7 V				"							2.0 V	5.5 V	Za		50	µA
			66	"				4.5 V	4.5 V	2.7 V	"							"	"	Zb		"	"
			67	"							"	2.7 V	4.5 V	4.5 V				"	"	Zd		"	"
			68	"							"				2.7 V	4.5 V	4.5 V	"	"	Zc		"	"
	I_{OZL}		69	0.0 V	0.0 V	4.5 V	0.5 V				"							"	"	Za		-50	"
			70	"				0.0 V	4.5 V	0.5 V	"							"	"	Zb		"	"
			71	"							"	0.5 V	4.5 V	0.0 V				"	"	Zd		"	"
			72	"							"				0.5 V	4.5 V	0.0 V	"	"	Zc		"	"
	I_{CCH}	3005	73	4.5 V	0.0 V	4.5 V		0.0 V	4.5 V		"		4.5 V	0.0 V		4.5 V	0.0 V	0.0 V	"	V_{CC}		15	mA
	I_{CCL}	3005	74	0.0 V	0.0 V	0.0 V		0.0 V	0.0 V		"		0.0 V	0.0 V		0.0 V	0.0 V	0.0 V	"	V_{CC}		22	"
	I_{CCZ}	3005	75	0.0 V	0.0 V	0.0 V		0.0 V	0.0 V		"		0.0 V	0.0 V		0.0 V	0.0 V	4.5 V	"	V_{CC}		23	"
2	Same tests, terminal conditions, and limits as subgroup 1, except T_C = +125°C and V_{IC} tests are omitted.																						
3	Same tests, terminal conditions, and limits as subgroup 1, except T_C = -55°C and V_{IC} tests are omitted.																						
7 Tc = 25°C	Func-tional test 3/	3014	76	A	A	B	L	A	B	L	GND	L	B	A	L	B	A	B	4/	All outputs			
		"	77	"	B	B	L	B	B	L	"	L	B	B	L	B	B	"	"				
		"	78	"	B	A	H	B	A	H	"	H	A	B	H	A	B	"	"				
		"	79	"	A	A	H	A	A	H	"	H	A	A	H	A	A	"	"				
		"	80	B	B	A	L	B	A	L	"	L	A	B	L	A	B	"	"				
		"	81	"	B	B	L	B	B	L	"	L	B	B	L	B	B	"	"				
		"	82	"	A	B	H	A	B	H	"	H	B	A	H	B	A	"	"				
		"	83	"	A	A	H	A	A	H	"	H	A	A	H	A	A	"	"				
8	Same tests, terminal conditions, and limits as for subgroup 7, except T_C = +125°C and T_C = -55°C.																						
9 T_C = 25°C	t_{PLH1}	3003 Fig. 4	84	0.0 V	IN		OUT				GND							0.0 V	5.0 V	I0a to Za	2.5	5.5	ns
			85	2.7 V		IN	OUT				"							"	"	I1a to Za	"	"	"
		"	86	0.0 V				IN		OUT	"							"	"	I0b to Zb	"	"	"
		"	87	2.7 V					IN	OUT	"							"	"	I1b to Zb	"	"	"
		"	88	2.7 V							"	OUT	IN					"	"	I1d to Zd	"	"	"
		"	89	0.0 V							"	OUT		IN				"	"	I0d to Zd	"	"	"
		"	90	2.7 V							"				OUT	IN		"	"	I1c to Zc	"	"	"
		"	91	0.0 V							"				OUT		IN	"	"	I0c to Zc	"	"	"

See footnotes at end of table.

TABLE III. Group A inspection for device type 06.

Terminal conditions (pins not designated may be high ≥ 2.0 V; low ≤ 0.8 V; or open).

Subgroup	Symbol	MIL-STD-883 method	Cases E, F	1	2	3	4	5	6	7	8	9	10	11	12	13	14	15	16	Measured terminal	Limits		Unit
			Case 2 1/	2	3	4	5	7	8	9	10	12	13	14	15	17	18	19	20				
			Test no.	S	I0a	I1a	Za	I0b	I1b	Zb	GND	Zd	I1d	I0d	Zc	I1c	I0c	$\overline{OE}$	V_{CC}		Min	Max	
9 T_C = 25°C	t_{PHL1}	3003 Fig. 4	92	0.0 V	IN		OUT				GND							0.0 V	5.0 V	I0a to Za	2.0	5.5	ns
			93	2.7 V		IN	OUT				"							"	"	I1a to Za	"	"	"
		"	94	0.0 V				IN		OUT	"							"	"	I0b to Zb	"	"	"
		"	95	2.7 V					IN	OUT	"							"	"	I1b to Zb	"	"	"
		"	96	2.7 V							"	OUT	IN					"	"	I1d to Zd	"	"	"
		"	97	0.0 V							"	OUT		IN				"	"	I0d to Zd	"	"	"
		"	98	2.7 V							"				OUT	IN		"	"	I1c to Zc	"	"	"
		"	99	0.0 V							"				OUT		IN	"	"	I0c to Zc	"	"	"
	t_{PLH3}	"	100	IN	0.0 V	2.7 V	OUT				"							"	"	S to Za	4.0	9.5	"
		"	101	"				0.0 V	2.7 V	OUT	"							"	"	S to Zb	"	"	"
		"	102	"							"	OUT	2.7 V	0.0 V				"	"	S to Zd	"	"	"
		"	103	"							"				OUT	2.7 V	0.0 V	"	"	S to Zc	"	"	"
	t_{PHL3}	"	104	"	2.7 V	0.0 V	OUT				"							"	"	S to Za	2.5	7.0	"
		"	105	"				2.7 V	0.0 V	OUT	"							"	"	S to Zb	"	"	"
		"	106	"							"	OUT	0.0 V	2.7 V				"	"	S to Zd	"	"	"
		"	107	"							"				OUT	0.0 V	2.7 V	"	"	S to Zc	"	"	"
	t_{PZH5}	"	108	0.0 V	2.7 V		OUT				"							IN	"	$\overline{OE}$ to Za	2.0	6.0	"
		"	109	"				2.7 V		OUT	"							"	"	$\overline{OE}$ to Zb	"	"	"
		"	110	"							"	OUT		2.7 V				"	"	$\overline{OE}$ to Zd	"	"	"
		"	111	"							"				OUT		2.7 V	"	"	$\overline{OE}$ to Zc	"	"	"
	t_{PZL5}	"	112	2.7 V		0.0 V	OUT				"							"	"	$\overline{OE}$ to Za	2.5	7.0	"
		"	113	"					0.0 V	OUT	"							"	"	$\overline{OE}$ to Zb	"	"	"
		"	114	"							"	OUT	0.0 V					"	"	$\overline{OE}$ to Zd	"	"	"
		"	115	"							"				OUT	0.0 V		"	"	$\overline{OE}$ to Zc	"	"	"
	t_{PHZ5}	"	116	"		2.7 V	OUT				"							"	"	$\overline{OE}$ to Za	2.0	6.0	"
		"	117	"					2.7 V	OUT	"							"	"	$\overline{OE}$ to Zb	"	"	"
		"	118	"							"	OUT	2.7 V					"	"	$\overline{OE}$ to Zd	"	"	"
		"	119	"							"				OUT	2.7 V		"	"	$\overline{OE}$ to Zc	"	"	"
	t_{PLZ5}	"	120	0.0 V	0.0 V		OUT				"							"	"	$\overline{OE}$ to Za	"	"	"
		"	121	"				0.0 V		OUT	"							"	"	$\overline{OE}$ to Zb	"	"	"
		"	122	"							"	OUT		0.0 V				"	"	$\overline{OE}$ to Zd	"	"	"
		"	123	"							"				OUT		0.0 V	"	"	$\overline{OE}$ to Zc	"	"	"
10	Same tests and terminal conditions as subgroup 9, except T_C = +125°C and use limits from table I.																						
11	Same tests, terminal conditions and limits as for subgroup 10, except T_C = -55°C.																						

1/ For case 2 pins not referenced are N/C.

2/ I_{IL} limits shall be as follows:

Test	Min/Max limits in mA for circuit			
	A	B	C	D
I_{IL}	-.25/-.60	-.03/-.60	-.03/-.60	0.0/-0.30

3/ A = 2.5 V, B = 0.5 V. H ≥ 1.5 V, L ≤ 1.5 V.

4/ Perform function sequence at V_{CC} = 4.5 V and repeat at V_{CC} = 5.5 V.

TABLE III. Group A inspection for device type 07.

Terminal conditions (pins not designated may be high ≥ 2.0 V; low ≤ 0.8 V; or open).

Subgroup	Symbol	MIL-STD-883 method	Cases E, F	1	2	3	4	5	6	7	8	9	10	11	12	13	14	15	16	Measured terminal	Limits		Unit
			Case 2 1/	2	3	4	5	7	8	9	10	12	13	14	15	17	18	19	20				
			Test no.	S	I0a	I1a	$\overline{Z}$ a	I0b	I1b	$\overline{Z}$ b	GND	$\overline{Z}$ d	I1d	I0d	$\overline{Z}$ c	I1c	I0c	$\overline{OE}$	V_{CC}		Min	Max	
1	V_{OL}	3007	1	0.8 V	2.0 V	0.8 V	20 mA				GND							0.8 V	4.5 V	$\overline{Z}$ a		0.5	V
Tc = 25°C		"	2	2.0 V	0.8 V	2.0 V	20 mA				"							"	"	$\overline{Z}$ a		"	"
		"	3	0.8 V				2.0 V	0.8 V	20 mA	"							"	"	$\overline{Z}$ b		"	"
		"	4	2.0 V				0.8 V	2.0 V	20 mA	"							"	"	$\overline{Z}$ b		"	"
		"	5	0.8 V							"	20 mA	0.8 V	2.0 V V				"	"	$\overline{Z}$ d		"	"
		"	6	2.0 V							"	20 mA	2.0 V V	0.8 V				"	"	$\overline{Z}$ d		"	"
		"	7	0.8 V							"				20 mA	0.8 V	2.0 V	"	"	$\overline{Z}$ c		"	"
		"	8	2.0 V							"				20 mA	2.0 V	0.8 V	"	"	$\overline{Z}$ c		"	"
	V_{OH}	3006	9	0.8 V	0.8 V	2.0 V	-3 mA				"							"	"	$\overline{Z}$ a	2.4		"
		"	10	2.0 V	2.0 V	0.8 V	-3 mA				"							"	"	$\overline{Z}$ a	"		"
		"	11	0.8 V				0.8 V	2.0 V	-3 mA	"							"	"	$\overline{Z}$ b	"		"
		"	12	2.0 V				2.0 V	0.8 V	-3 mA	"							"	"	$\overline{Z}$ b	"		"
		"	13	0.8 V							"	-3 mA	2.0 V	0.8 V				"	"	$\overline{Z}$ d	"		"
		"	14	2.0 V							"	-3 mA	0.8 V	2.0 V				"	"	$\overline{Z}$ d	"		"
		"	15	0.8 V							"				-3 mA	2.0 V	0.8 V	"	"	$\overline{Z}$ c	"		"
		"	16	2.0 V							"				-3 mA	0.8 V	2.0 V	"	"	$\overline{Z}$ c	"		"
	V_{IC}		17	-18 mA							"								"	S		-1.2	"
			18		-18 mA						"								"	I0a		"	"
			19			-18 mA					"								"	I1a		"	"
			20					-18 mA			"								"	I0b		"	"
			21						-18 mA		"								"	I1b		"	"
			22								"		-18 mA						"	I1d		"	"
			23								"			-18 mA					"	I0d		"	"
			24								"					-18 mA			"	I1c		"	"
			25								"						-18 mA		"	I0c		"	"
			26								"							-18 mA	"	$\overline{OE}$		"	"
	I_{IH1}	3010	27	2.7 V							"							4.5 V	5.5 V	S		20	µA
		"	28	4.5 V	2.7 V						"							"	"	I0a		"	"
		"	29	0.0 V		2.7 V					"							"	"	I1a		"	"
		"	30	4.5 V				2.7 V			"							"	"	I0b		"	"
		"	31	0.0 V					2.7 V		"							"	"	I1b		"	"
		"	32	0.0 V							"		2.7 V					"	"	I1d		"	"
		"	33	4.5 V							"			2.7 V				"	"	I0d		"	"
		"	34	0.0 V							"					2.7 V		"	"	I1c		"	"
		"	35	4.5 V							"						2.7 V	"	"	I0c		"	"
		"	36								"							2.7 V	"	$\overline{OE}$		"	"
	I_{IH2}	"	37	7.0 V							"							4.5 V	"	S		100	"
		"	38	4.5 V	7.0 V						"							"	"	I0a		"	"
		"	39	0.0 V		7.0 V					"							"	"	I1a		"	"
		"	40	4.5 V				7.0 V			"							"	"	I0b		"	"
		"	41	0.0 V					7.0 V		"							"	"	I1b		"	"
		"	42	0.0 V							"		7.0 V					"	"	I1d		"	"
		"	43	4.5 V							"			7.0 V				"	"	I0d		"	"
		"	44	0.0 V							"					7.0 V		"	"	I1c		"	"
		"	45	4.5 V							"						7.0 V	"	"	I0c		"	"
		"	46								"							7.0 V	"	$\overline{OE}$		"	"

See footnotes at end of table.

TABLE III. Group A inspection for device type 07.

Terminal conditions (pins not designated may be high ≥ 2.0 V; low ≤ 0.8 V; or open).

Subgroup	Symbol	MIL-STD-883 method	Cases E, F	1	2	3	4	5	6	7	8	9	10	11	12	13	14	15	16	Measured terminal	Limits		Unit
			Case 2 1/	2	3	4	5	7	8	9	10	12	13	14	15	17	18	19	20				
			Test no.	S	I0a	I1a	$\overline{Z}$ a	I0b	I1b	$\overline{Z}$ b	GND	$\overline{Z}$ d	I1d	I0d	$\overline{Z}$ c	I1c	I0c	$\overline{OE}$	V_{CC}		Min	Max	
1 Tc = 25°C	I_{IL1}	3009	47	0.5 V							GND								5.5 V	S	2/	2/	mA
		"	48	0.0 V	0.5 V						"								"	I0a	"	"	"
		"	49	4.5 V		0.5 V					"								"	I1a	"	"	"
		"	50	0.0 V				0.5 V			"								"	I0b	"	"	"
		"	51	4.5 V					0.5 V		"								"	I1b	"	"	"
		"	52	4.5 V							"		0.5 V						"	I1d	"	"	"
		"	53	0.0 V							"			0.5 V					"	I0d	"	"	"
		"	54	4.5 V							"					0.5 V			"	I1c	"	"	"
		"	55	0.0 V							"						0.5 V		"	I0c	"	"	"
		"	56								"							0.5 V	"	$\overline{OE}$	"	"	"
	I_{OS}	3011	57	0.0 V	0.0 V	4.5 V	0.0 V				"							0.0 V	"	$\overline{Z}$ a	-60	-150	"
		"	58	"				0.0 V	4.5 V	0.0 V	"							"	"	$\overline{Z}$ b	"	"	"
		"	59	"							"	0.0 V	4.5 V	0.0 V				"	"	$\overline{Z}$ d	"	"	"
		"	60	"							"				0.0 V	4.5 V	0.0 V	"	"	$\overline{Z}$ c	"	"	"
	I_{OD}		61	"	5.5 V		2.5 V				"							"	4.5 V	$\overline{Z}$ a	35		"
			62	"				5.5 V		2.5 V	"							"	"	$\overline{Z}$ b	"		"
			63	"							"	2.5 V		5.5 V				"	"	$\overline{Z}$ d	"		"
			64	"							"				2.5 V		5.5 V	"	"	$\overline{Z}$ c	"		"
	I_{OZH}		65	"	4.5 V	4.5 V	2.7 V				"							2.0 V	5.5 V	$\overline{Z}$ a		50	µA
			66	"				4.5 V	4.5 V	2.7 V	"							"	"	$\overline{Z}$ b		"	"
			67	"							"	2.7 V	4.5 V	4.5 V				"	"	$\overline{Z}$ d		"	"
			68	"							"				2.7 V	4.5 V	4.5 V	"	"	$\overline{Z}$ c		"	"
	I_{OZL}		69	4.5 V	4.5 V	0.0 V	0.5 V				"							"	"	$\overline{Z}$ a		-50	"
			70	"				4.5 V	0.0 V	0.5 V	"							"	"	$\overline{Z}$ b		"	"
			71	"							"	0.5 V	0.0 V	4.5 V				"	"	$\overline{Z}$ d		"	"
			72	"							"				0.5 V	0.0 V	4.5 V	"	"	$\overline{Z}$ c		"	"
	I_{CCH}	3005	73	0.0 V	0.0 V	0.0 V		0.0 V	0.0 V		"		0.0 V	0.0 V		0.0 V	0.0 V	0.0 V	"	V_{CC}		9.5	mA
	I_{CCL}	3005	74	4.5 V	0.0 V	4.5 V		0.0 V	4.5 V		"		4.5 V	0.0 V		4.5 V	0.0 V	0.0 V	"	V_{CC}		23	"
	I_{CC}	3005	75	0.0 V	0.0 V	0.0 V		0.0 V	0.0 V		"		0.0 V	0.0 V		0.0 V	0.0 V	4.5 V	"	V_{CC}		17	"
2	Same tests, terminal conditions, and limits as subgroup 1, except T_C = +125°C and V_{IC} tests are omitted.																						
3	Same tests, terminal conditions, and limits as subgroup 1, except T_C = -55°C and V_{IC} tests are omitted.																						
7 Tc = 25°C	Func-tional test 3/	3014	76	B	A	B	L	A	B	L	GND	L	B	A	L	B	A	B	4/	All outputs			
		"	77	"	A	A	L	A	A	L	"	L	A	A	L	A	A	"	"				
		"	78	"	B	A	H	B	A	H	"	H	A	B	H	A	B	"	"				
		"	79	"	B	B	"	B	B	"	"	"	B	B	"	B	B	"	"				
		"	80	A	A	B	"	A	B	"	"	"	B	A	"	B	A	"	"				
		"	81	"	B	B	"	B	B	"	"	"	B	B	"	B	B	"	"				
		"	82	"	B	A	L	B	A	L	"	L	A	B	L	A	B	"	"				
		"	83	"	A	A	L	A	A	L	"	L	A	A	L	A	A	"	"				
8	Same tests, terminal conditions, and limits as for subgroup 7, except T_C = +125°C and T_C = -55°C.																						

See footnotes at end of table.

TABLE III. Group A inspection for device type 07.

Terminal conditions (pins not designated may be high ≥ 2.0 V; low ≤ 0.8 V; or open).

Subgroup	Symbol	MIL-STD-883 method	Cases E, F	1	2	3	4	5	6	7	8	9	10	11	12	13	14	15	16	Measured terminal	Limits		Unit
			Case 2 1/	2	3	4	5	7	8	9	10	12	13	14	15	17	18	19	20				
			Test no.	S	I0a	I1a	$\overline{Z}$ a	I0b	I1b	$\overline{Z}$ b	GND	$\overline{Z}$ d	I1d	I0d	$\overline{Z}$ c	I1c	I0c	$\overline{OE}$	V_{CC}		Min	Max	
9	t_{PLH2}	3003	84	0.0 V	IN		OUT				GND							0.0 V	5.0 V	I0a to $\overline{Z}$ a	2.5	5.3	ns
T_C = 25°C		Fig. 4	85	2.7 V		IN	OUT				"							"	"	I1a to $\overline{Z}$ a	"	"	"
		"	86	0.0 V				IN		OUT	"							"	"	I0b to $\overline{Z}$ b	"	"	"
		"	87	2.7 V					IN	OUT	"							"	"	I1b to $\overline{Z}$ b	"	"	"
		"	88	2.7 V							"	OUT	IN					"	"	I1d to $\overline{Z}$ d	"	"	"
		"	89	0.0 V							"	OUT		IN				"	"	I0d to $\overline{Z}$ d	"	"	"
		"	90	2.7 V							"				OUT	IN		"	"	I1c to $\overline{Z}$ c	"	"	"
		"	91	0.0 V							"				OUT		IN	"	"	I0c to $\overline{Z}$ c	"	"	"
	t_{PHL2}	"	92	0.0 V	IN		OUT				"							"	"	I0a to $\overline{Z}$ a	1.0	4.0	"
		"	93	2.7 V		IN	OUT				"							"	"	I1a to $\overline{Z}$ a	"	"	"
		"	94	0.0 V				IN		OUT	"							"	"	I0b to $\overline{Z}$ b	"	"	"
		"	95	2.7 V					IN	OUT	"							"	"	I1b to $\overline{Z}$ b	"	"	"
		"	96	2.7 V							"	OUT	IN					"	"	I1d to $\overline{Z}$ d	"	"	"
		"	97	0.0 V							"	OUT		IN				"	"	I0d to $\overline{Z}$ d	"	"	"
		"	98	2.7 V							"				OUT	IN		"	"	I1c to $\overline{Z}$ c	"	"	"
		"	99	0.0 V							"				OUT		IN	"	"	I0c to $\overline{Z}$ c	"	"	"
	t_{PLH4}	"	100	IN	2.7 V	0.0 V	OUT				"							IN	"	S to $\overline{Z}$ a	3.0	7.5	"
		"	101	"				2.7 V	0.0 V	OUT	"							"	"	S to $\overline{Z}$ b	"	"	"
		"	102	"							"	OUT	0.0 V	2.7 V				"	"	S to $\overline{Z}$ d	"	"	"
		"	103	"							"				OUT	0.0 V	2.7 V	"	"	S to $\overline{Z}$ c	"	"	"
	t_{PHL4}	"	104	"	0.0 V	2.7 V	OUT				"							"	"	S to $\overline{Z}$ a	2.5	7.0	"
		"	105	"				0.0 V	2.7 V	OUT	"							"	"	S to $\overline{Z}$ b	"	"	"
		"	106	"							"	OUT	2.7 V	0.0 V				"	"	S to $\overline{Z}$ d	"	"	"
		"	107	"							"				OUT	2.7 V	0.0 V	"	"	S to $\overline{Z}$ c	"	"	"
	t_{PZH6}	"	108	0.0 V	0.0 V		OUT				"							"	"	$\overline{OE}$ to $\overline{Z}$ a	2.0	6.0	"
		"	109	"				0.0 V		OUT	"							"	"	$\overline{OE}$ to $\overline{Z}$ b	"	"	"
		"	110	"							"	OUT		0.0 V				"	"	$\overline{OE}$ to $\overline{Z}$ d	"	"	"
		"	111	"							"				OUT		0.0 V	"	"	$\overline{OE}$ to $\overline{Z}$ c	"	"	"
	t_{PZL6}	"	112	2.7 V		2.7 V	OUT				"							"	"	$\overline{OE}$ to $\overline{Z}$ a	2.5	7.0	"
		"	113	"					2.7 V	OUT	"							"	"	$\overline{OE}$ to $\overline{Z}$ b	"	"	"
		"	114	"							"	OUT	2.7 V					"	"	$\overline{OE}$ to $\overline{Z}$ d	"	"	"
		"	115	"							"				OUT	2.7 V		"	"	$\overline{OE}$ to $\overline{Z}$ c	"	"	"

See footnotes at end of table.

TABLE III. Group A inspection for device type 07.
Terminal conditions (pins not designated may be high ≥ 2.0 V; low ≤ 0.8 V; or open).

Subgroup	Symbol	MIL-STD-883 method	Cases E, F	1	2	3	4	5	6	7	8	9	10	11	12	13	14	15	16	Measured terminal	Limits		Unit
			Case 2 1/	2	3	4	5	7	8	9	10	12	13	14	15	17	18	19	20				
			Test no.	S	I0a	I1a	$\overline{Z}$ a	I0b	I1b	$\overline{Z}$ b	GND	$\overline{Z}$ d	I1d	I0d	$\overline{Z}$ c	I1c	I0c	$\overline{OE}$	V_{CC}		Min	Max	
9	t_{PHZ6}	3003	116	0.0 V	0.0 V		OUT				GND							IN	5.0 V	$\overline{OE}$ to $\overline{Z}$ a	2.0	6.0	ns
T_C = 25°C		Fig. 4	117	"				0.0 V		OUT	"							"	"	$\overline{OE}$ to $\overline{Z}$ b	"	"	"
		"	118	"							"	OUT		0.0 V				"	"	$\overline{OE}$ to $\overline{Z}$ d	"	"	"
		"	119	"							"				OUT		0.0 V	"	"	$\overline{OE}$ to $\overline{Z}$ c	"	"	"
	t_{PLZ6}	"	120	2.7 V		2.7 V	OUT				"							"	"	$\overline{OE}$ to $\overline{Z}$ a	"	"	"
		"	121	"					2.7 V	OUT	"							"	"	$\overline{OE}$ to $\overline{Z}$ b	"	"	"
		"	122	"							"	OUT	2.7 V					"	"	$\overline{OE}$ to $\overline{Z}$ d	"	"	"
		"	123	"							"				OUT	2.7 V		"	"	$\overline{OE}$ to $\overline{Z}$ c	"	"	"
10	Same tests and terminal conditions as subgroup 9, except T_C = +125°C and use limits from table I.																						
11	Same tests, terminal conditions and limits as for subgroup 10, except T_C = -55°C.																						

1/ For case 2 pins not referenced are N/C.
2/ I_{IL} limits shall be as follows:

Test	Min/Max limits in mA for circuit			
	A	B	C	D
I_{IL}	-.25/-.60	-.03/-.60	-.03/-.60	0.0/-0.30

3/ A = 2.5 V, B = 0.5 V. H ≥ 1.5 V, L ≤ 1.5 V.
4/ Perform function sequence at V_{CC} = 4.5 V and repeat at V_{CC} = 5.5 V.

TABLE III. Group A inspection for device type 08.

Terminal conditions (pins not designated may be high ≥ 2.0 V; low ≤ 0.8 V; or open).

Subgroup	Symbol	MIL-STD-883 method	Cases E, F	1	2	3	4	5	6	7	8	9	10	11	12	13	14	15	16	Measured terminal	Limits		Unit
			Case 2 1/	2	3	4	5	7	8	9	10	12	13	14	15	17	18	19	20				
			Test no.	$\overline{OE}$ a	S1	I3a	I2a	I1a	I0a	Za	GND	Zb	I0b	I1b	I2b	I3b	S0	$\overline{OE}$ b	V_{CC}		Min	Max	
1 Tc = 25°C	V_{OH}	3006	1	0.8 V	0.8 V				2.0 V	-3 mA	GND						0.8 V		4.5 V	Za	2.4		V
		"	2	"	0.8 V			2.0 V		"	"						2.0 V		"	"	"		"
		"	3	"	2.0 V		2.0 V			"	"						0.8 V		"	"	"		"
		"	4	"	2.0 V	2.0 V				"	"						2.0 V		"	"	"		"
		"	5		0.8 V						"	-3 mA	2.0 V				0.8 V	0.8 V	"	Zb	"		"
		"	6		0.8 V						"	"		2.0 V			2.0 V	"	"	"	"		"
		"	7		2.0 V						"	"			2.0 V		0.8 V	"	"	"	"		"
		"	8		2.0 V						"	"				2.0 V	2.0 V	"	"	"	"		"
	V_{OL}	3007	9	0.8 V	0.8 V				0.8 V	20 mA	"						0.8 V		"	Za		0.5	"
		"	10	"	0.8 V			0.8 V		"	"						2.0 V		"	"		"	"
		"	11	"	2.0 V		0.8 V			"	"						0.8 V		"	"		"	"
		"	12	"	2.0 V	0.8 V				"	"						2.0 V		"	"		"	"
		"	13		0.8 V						"	20 mA	0.8 V				0.8 V	0.8 V	"	"		"	"
		"	14		0.8 V						"	"		0.8 V			2.0 V	"	"	"		"	"
		"	15		2.0 V						"	"			0.8 V		0.8 V	"	"	"		"	"
		"	16		2.0 V						"	"				0.8 V	2.0 V	"	"	"		"	"
	V_{IC}		17	-18 mA							"								"	$\overline{OE}$ a		-1.2	"
			18		-18 mA						"								"	S1		"	"
			19			-18 mA					"								"	I3a		"	"
			20				-18 mA				"								"	I2a		"	"
			21					-18 mA			"								"	I1a		"	"
			22						-18 mA		"								"	I0a		"	"
			23								"		-18 mA						"	I0b		"	"
			24								"			-18 mA					"	I1b		"	"
			25								"				-18 mA				"	I2b		"	"
			26								"					-18 mA			"	I3b		"	"
			27								"						-18 mA		"	S0		"	"
			28								"							-18 mA	"	$\overline{OE}$ b		"	"
	I_{IH1}	3010	29	2.7 V							"								5.5 V	$\overline{OE}$ a		20	μA
		"	30		2.7 V						"								"	S1		"	"
		"	31		0.0 V	2.7 V					"						0.0 V		"	I3a		"	"
		"	32		0.0 V		2.7 V				"						4.5 V		"	I2a		"	"
		"	33		4.5 V			2.7 V			"						0.0 V		"	I1a		"	"
		"	34		"				2.7 V		"						4.5 V		"	I0a		"	"
		"	35		"						"		2.7 V				4.5 V		"	I0b		"	"
		"	36		"						"			2.7 V			0.0 V		"	I1b		"	"
		"	37		0.0 V						"				2.7 V		4.5 V		"	I2b		"	"
		"	38		0.0 V						"					2.7 V	0.0 V		"	I3b		"	"
		"	39								"						2.7 V		"	S0		"	"
		"	40								"							2.7 V	"	$\overline{OE}$ b		"	"
	I_{IH2}	"	41	7.0 V							"								"	$\overline{OE}$ a		100	"
		"	42		7.0 V						"								"	S1		"	"
		"	43		0.0 V	7.0 V					"						0.0 V		"	I3a		"	"
		"	44		0.0 V		7.0 V				"						4.5 V		"	I2a		"	"
		"	45		4.5 V			7.0 V			"						0.0 V		"	I1a		"	"
		"	46		"				7.0 V		"						4.5 V		"	I0a		"	"
		"	47		"						"		7.0 V				4.5 V		"	I0b		"	"
		"	48		"						"			7.0 V			0.0 V		"	I1b		"	"
		"	49		0.0 V						"				7.0 V		4.5 V		"	I2b		"	"
		"	50		0.0 V						"					7.0 V	0.0 V		"	I3b		"	"
		"	51								"						7.0 V		"	S0		"	"
		"	52								"							7.0 V	"	$\overline{OE}$ b		"	"

See footnotes at end of table.

TABLE III. Group A inspection for device type 08 - Continued.
Terminal conditions (pins not designated may be high ≥ 2.0 V; low ≤ 0.8 V; or open).

Subgroup	Symbol	MIL-STD-883 method	Cases E, F	1	2	3	4	5	6	7	8	9	10	11	12	13	14	15	16	Measured terminal	Limits		Unit
			Case 2 1/	2	3	4	5	7	8	9	10	12	13	14	15	17	18	19	20				
			Test no.	$\overline{OE}$ a	S1	I3a	I2a	I1a	I0a	Za	GND	Zb	I0b	I1b	I2b	I3b	S0	$\overline{OE}$ b	V_{CC}		Min	Max	
1	I_{IL1}	3009	53	0.5 V							GND								5.5 V	$\overline{OE}$ a	2/	2/	mA
Tc = 25°C		"	54		0.5 V						"								"	S1	"	"	"
		"	55		4.5 V	0.5 V					"						4.5 V		"	I3a	"	"	"
		"	56		4.5 V		0.5 V				"						0.0 V		"	I2a	"	"	"
		"	57		0.0 V			0.5 V			"						4.5 V		"	I1a	"	"	"
		"	58		"				0.5 V		"						0.0 V		"	I0a	"	"	"
		"	59		"						"		0.5 V				0.0 V		"	I0b	"	"	"
		"	60		"						"			0.5 V			4.5 V		"	I1b	"	"	"
		"	61		4.5 V						"				0.5 V		0.0 V		"	I2b	"	"	"
		"	62		4.5 V						"					0.5 V	4.5 V		"	I3b	"	"	"
		"	63								"						0.5 V		"	S0	"	"	"
		"	64								"							0.5 V	"	$\overline{OE}$ b	"	"	"
	I_{OS}	3011	65	0.0 V	0.0 V				4.5 V	0.0 V	"						0.0 V		"	Za	-60	-150	"
		3011	66		0.0 V						"	0.0 V	4.5 V				"	0.0 V	"	Zb	-60	-150	"
	I_{OD}		67	0.0 V	0.0 V				0.0 V	2.5 V	"						"	0.0 V	4.5 V	Za	35		"
			68	0.0 V	0.0 V						"	2.5 V	0.0 V				"	0.0 V	4.5 V	Zb	35		"
	I_{OZH}		69	2.0 V	0.0 V				0.0 V	2.7 V	"						"		5.5 V	Za		50	µA
			70		0.0 V						"	2.7 V	0.0 V				"	2.0 V	"	Zb		50	"
	I_{OZL}		71	2.0 V	4.5 V	4.5 V				0.5 V	"						4.5 V		"	Za		-50	"
			72		4.5 V						"	0.5 V				4.5 V	4.5 V	2.0 V	"	Zb		-50	"
	I_{CCL}	3005	73	0.0 V	0.0 V	0.0 V	0.0 V	0.0 V	0.0 V		"		0.0 V	0.0 V	0.0 V	0.0 V	0.0 V	0.0 V	"	V_{CC}		23	mA
	I_{CCH}	3005	74	0.0 V	0.0 V	4.5 V	0.0 V	0.0 V	4.5 V		"		4.5 V	0.0 V	0.0 V	4.5 V	0.0 V	0.0 V	"	V_{CC}		16	"
	I_{CCZ}	3005	75	4.5 V	0.0 V	0.0 V	0.0 V	0.0 V	0.0 V		"		0.0 V	0.0 V	0.0 V	0.0 V	0.0 V	4.5 V	"	V_{CC}		23	"
2	Same tests, terminal conditions, and limits as subgroup 1, except T_C = +125°C and V_{IC} tests are omitted.																						
3	Same tests, terminal conditions, and limits as subgroup 1, except T_C = -55°C and V_{IC} tests are omitted.																						
7	Func-	3014	76	B	B	B	B	B	B	L	GND	L	B	B	B	B	B	B	4/	All			
Tc = 25°C	tional	"	77	"	"	"	"	B	A	H	"	H	A	B	"	"	B	"	"	outputs			
	test	"	78	"	"	"	"	B	B	L	"	L	B	B	"	"	A	"	"				
	3/	"	79	"	"	"	"	A	"	H	"	H	"	A	"	"	A	"	"				
		"	80	"	A	"	"	B	"	L	"	L	"	B	"	"	B	"	"				
		"	81	"	"	"	A	"	"	H	"	H	"	"	A	"	B	"	"				
		"	82	"	"	"	B	"	"	L	"	L	"	"	B	"	A	"	"				
		"	83	"	"	A	B	"	"	H	"	H	"	"	B	A	A	"	"				
8	Same tests, terminal conditions, and limits as for subgroup 7, except T_C = +125°C and T_C = -55°C.																						
9	t_{PLH1}	3003	84	0.0 V	0.0 V				IN	OUT	GND						0.0 V		5.0 V	I0a to Za	3.0	7.0	ns
T_C = 25°C		Fig. 4	85	"	0.0 V			IN		"	"						2.7 V		"	I1a to Za	"	"	"
		"	86	"	2.7 V		IN			"	"						0.0 V		"	I2a to Za	"	"	"
		"	87	"	2.7 V	IN				"	"						2.7 V		"	I3a to Za	"	"	"
		"	88		0.0 V						"	OUT	IN				0.0 V	0.0 V	"	I0b to Zb	"	"	"
		"	89		0.0 V						"	"		IN			2.7 V	"	"	I1b to Zb	"	"	"
		"	90		2.7 V						"	"			IN		0.0 V	"	"	I2b to Zb	"	"	"
		"	91		2.7 V						"	"				IN	2.7 V	"	"	I3b to Zb	"	"	"
	t_{PHL1}	"	92	0.0 V	0.0 V				IN	OUT	"						0.0 V		"	I0a to Za	2.5	7.0	"
		"	93	"	0.0 V			IN		"	"						2.7 V		"	I1a to Za	"	"	"
		"	94	"	2.7 V		IN			"	"						0.0 V		"	I2a to Za	"	"	"
		"	95	"	2.7 V	IN				"	"						2.7 V		"	I3a to Za	"	"	"
		"	96		0.0 V						"	OUT	IN				0.0 V	0.0 V	"	I0b to Zb	"	"	"
		"	97		0.0 V						"	"		IN			2.7 V	"	"	I1b to Zb	"	"	"
		"	98		2.7 V						"	"			IN		0.0 V	"	"	I2b to Zb	"	"	"
		"	99		2.7 V						"	"				IN	2.7 V	"	"	I3b to Zb	"	"	"

See footnotes at end of table.

TABLE III. Group A inspection for device type 08 - Continued.
Terminal conditions (pins not designated may be high ≥ 2.0 V; low ≤ 0.8 V; or open).

Subgroup	Symbol	MIL-STD-883 method	Cases E, F	1	2	3	4	5	6	7	8	9	10	11	12	13	14	15	16	Measured terminal	Limits		Unit
			Case 2 1/	2	3	4	5	7	8	9	10	12	13	14	15	17	18	19	20				
			Test no.	$\overline{OE}$ a	S1	I3a	I2a	I1a	I0a	Za	GND	Zb	I0b	I1b	I2b	I3b	S0	$\overline{OE}$ b	V_{CC}		Min	Max	
9 T_C = 25°C	t_{PLH3}	3003 Fig. 4	100	0.0 V	0.0 V			2.7 V	0.0 V	OUT	GND						IN		5.0 V	S0 to Za	4.5	11.5	ns
			101		0.0 V						"	OUT	0.0 V	2.7 V			IN	0.0 V	"	S0 to Zb	"	"	"
		"	102	0.0 V	IN		2.7 V		0.0 V	OUT	"						0.0 V		"	S1 to Za	"	"	"
		"	103		IN						"	OUT	0.0 V		2.7 V		0.0 V	0.0 V	"	S1 to Zb	"	"	"
	t_{PHL3}	"	104	0.0 V	0.0 V			0.0 V	2.7 V	OUT	"						IN		"	S0 to Za	3.0	9.0	"
		"	105		0.0 V						"	OUT	2.7 V	0.0 V			IN	0.0 V	"	S0 to Zb	"	"	"
		"	106	0.0 V	IN		0.0 V		2.7 V	OUT	"						0.0 V		"	S1 to Za	"	"	"
		"	107		IN						"	OUT	2.7 V		0.0 V		0.0 V	0.0 V	"	S1 to Zb	"	"	"
	t_{PZH5}	"	108	IN	2.7 V	2.7 V				OUT	"						2.7 V		"	$\overline{OE}$ a to Za	3.0	8.0	"
		"	109		2.7 V						"	OUT				2.7 V	2.7 V	IN	"	$\overline{OE}$ b to Zb	"	"	"
	t_{PZL5}	"	110	IN	0.0 V				0.0 V	OUT	"						0.0 V		"	$\overline{OE}$ a to Za	"	"	"
		"	111		0.0 V						"	OUT	0.0 V				0.0 V	IN	"	$\overline{OE}$ b to Zb	"	"	"
	t_{PHZ5}	"	112	IN	2.7 V	2.7 V				OUT	"						2.7 V		"	$\overline{OE}$ a to Za	2.0	5.0	"
		"	113		2.7 V						"	OUT				2.7 V	2.7 V	IN	"	$\overline{OE}$ b to Zb	2.0	5.0	"
	t_{PLZ5}	"	114	IN	0.0 V				0.0 V	OUT	"						0.0 V		"	$\overline{OE}$ a to Za	2.0	6.0	"
		"	115		0.0 V						"	OUT	0.0 V				0.0 V	IN	"	$\overline{OE}$ b to Zb	2.0	6.0	"
10	Same tests and terminal conditions as subgroup 9, except T_C = +125°C and for the following limits. t_{PLH1} = 2.5 to 9.0 ns; t_{PHL1} = 2.5 to 8.0 ns; t_{PZH5} = 2.5 to 10.0 ns; t_{PHZ5} = 2.0 to 6.5 ns; t_{PLH3} = 3.5 to 15.0 ns; t_{PHL3} = 2.5 to 11.0 ns; t_{PZL5} = 2.5 to 10.0 ns; t_{PLZ5} = 2.0 to 8.0 ns																						
11	Same tests, terminal conditions and limits as for subgroup 10, except T_C = -55°C.																						

1/ For case 2 pins not referenced are N/C.
2/ I_{IL} limits shall be as follows:

Test	Min/Max limits in mA for circuit			
	A	B	C	D
I_{IL}	-.25/-.60	-.03/-.60	-.03/-.60	0.0/-0.30

3/ A = 2.5 V, B = 0.5 V. H ≥ 1.5 V, L ≤ 1.5 V.
4/ Perform function sequence at V_{CC} = 4.5 V and repeat at V_{CC} = 5.5 V.

TABLE III. Group A inspection for device type 09.

Terminal conditions (pins not designated may be high ≥ 2.0 V; low ≤ 0.8 V; or open).

Subgroup	Symbol	MIL-STD-883 method	Cases E, F	1	2	3	4	5	6	7	8	9	10	11	12	13	14	15	16	Measured terminal	Limits		Unit
			Case 2 1/	2	3	4	5	7	8	9	10	12	13	14	15	17	18	19	20				
			Test no.	$\overline{E}$ a	S1	I3a	I2a	I1a	I0a	$\overline{Z}$ a	GND	$\overline{Z}$ b	I0b	I1b	I2b	I3b	S0	$\overline{E}$ b	V_{CC}		Min	Max	
1	V_{OH}	3006	1	2.0 V						-1 mA	GND								4.5 V	$\overline{Z}$ a	2.5		V
Tc = 25°C		"	2	0.8 V	0.8 V				0.8 V	"	"						0.8 V		"	"	"		"
		"	3	"	0.8 V			0.8 V		"	"						2.0 V		"	"	"		"
		"	4	"	2.0 V		0.8 V			"	"						0.8 V		"	"	"		"
		"	5	"	2.0 V	0.8 V				"	"						2.0 V		"	$\overline{Z}$ b	"		"
		"	6								"	-1 mA						2.0 V	"	"	"		"
		"	7		0.8 V						"	"	0.8 V				0.8 V	0.8 V	"	"	"		"
		"	8		0.8 V						"	"		0.8 V			2.0 V	"	"	"	"		"
		"	9		2.0 V						"	"			0.8 V		0.8 V	"	"	"	"		"
		"	10		2.0 V						"	"				0.8 V	2.0 V		"	"	"		"
	V_{OL}	3007	11	0.8 V	0.8 V				2.0 V	20 mA	"						0.8 V		"	$\overline{Z}$ a		0.5	"
		"	12	"	0.8 V			2.0 V		"	"						2.0 V		"	"		"	"
		"	13	"	2.0 V		2.0 V			"	"						0.8 V		"	"		"	"
		"	14	"	2.0 V	2.0 V				"	"						2.0 V		"	"		"	"
		"	15		0.8 V						"	20 mA	2.0 V				0.8 V	0.8 V	"	$\overline{Z}$ b		"	"
		"	16		0.8 V						"	"		2.0 V			2.0 V	"	"	"		"	"
		"	17		2.0 V						"	"			2.0 V		0.8 V	"	"	"		"	"
		"	18		2.0 V						"	"				2.0 V	2.0 V	"	"	"		"	"
	V_{IC}		19	-18 mA							"								"	$\overline{E}$ a		-1.2	"
			20		-18 mA						"								"	S1		"	"
			21			-18 mA					"								"	I3a		"	"
			22				-18 mA				"								"	I2a		"	"
			23					-18 mA			"								"	I1a		"	"
			24						-18 mA		"								"	I0a		"	"
			25								"		-18 mA						"	I0b		"	"
			26								"			-18 mA					"	I1b		"	"
			27								"				-18 mA				"	I2b		"	"
			28								"					-18 mA			"	I3b		"	"
			29								"						-18 mA		"	S0		"	"
			30								"							-18 mA	"	$\overline{E}$ b		"	"
	I_{IH1}	3010	31	2.7 V							"								5.5 V	$\overline{E}$ a		20	μA
		"	32		2.7 V						"								"	S1		"	"
		"	33	4.5 V	0.0 V	2.7 V					"						0.0 V		"	I3a		"	"
		"	34	"	0.0 V		2.7 V				"						4.5 V		"	I2a		"	"
		"	35	"	4.5 V			2.7 V			"						0.0 V		"	I1a		"	"
		"	36	"	"				2.7 V		"						4.5 V		"	I0a		"	"
		"	37		"						"		2.7 V				4.5 V	4.5 V	"	I0b		"	"
		"	38		"						"			2.7 V			0.0 V	"	"	I1b		"	"
		"	39		0.0 V						"				2.7 V		4.5 V	"	"	I2b		"	"
		"	40		0.0 V						"					2.7 V	0.0 V	"	"	I3b		"	"
		"	41								"						2.7 V		"	S0		"	"
		"	42								"							2.7 V	"	$\overline{E}$ b		"	"
	I_{IH2}	"	43	7.0 V							"								"	$\overline{E}$ a		100	"
		"	44		7.0 V						"								"	S1		"	"
		"	45	4.5 V	0.0 V	7.0 V					"						0.0 V		"	I3a		"	"
		"	46	"	0.0 V		7.0 V				"						4.5 V		"	I2a		"	"
		"	47	"	4.5 V			7.0 V			"						0.0 V		"	I1a		"	"
		"	48	"	4.5 V				7.0 V		"						4.5 V		"	I0a		"	"

See footnotes at end of table.

TABLE III. Group A inspection for device type 09 - Continued.

Terminal conditions (pins not designated may be high ≥ 2.0 V; low ≤ 0.8 V; or open).

Subgroup	Symbol	MIL-STD-883 method	Cases E, F	1	2	3	4	5	6	7	8	9	10	11	12	13	14	15	16	Measured terminal	Limits		Unit
			Case 2 1/	2	3	4	5	7	8	9	10	12	13	14	15	17	18	19	20				
			Test no.	$\overline{E}$ a	S1	I3a	I2a	I1a	I0a	$\overline{Z}$ a	GND	$\overline{Z}$ b	I0b	I1b	I2b	I3b	S0	$\overline{E}$ b	V_{CC}		Min	Max	
1 Tc = 25°C	I_{IH2}	3010	49		4.5 V						GND		7.0 V				4.5 V	4.5 V	5.5 V	I0b		100	µA
		"	50		4.5 V						"			7.0 V			0.0 V	"	"	I1b		"	"
		"	51		0.0 V						"				7.0 V		4.5 V	"	"	I2b		"	"
		"	52		0.0 V						"					7.0 V	0.0 V	"	"	I3b		"	"
		"	53								"						7.0 V		"	S0		"	"
		"	54								"							7.0 V	"	$\overline{E}$ b		"	"
	I_{IL1}	3009	55	0.5 V							"								"	$\overline{E}$ a	2/	2/	mA
		"	56		0.5 V						"								"	S1	"	"	"
		"	57	0.0 V	4.5 V	0.5 V					"						4.5 V		"	I3a	"	"	"
		"	58	"	4.5 V		0.5 V				"						0.0 V		"	I2a	"	"	"
		"	59	"	0.0 V			0.5 V			"						4.5 V		"	I1a	"	"	"
		"	60	"	"				0.5 V		"						0.0 V		"	I0a	"	"	"
		"	61		"						"		0.5 V				0.0 V	0.0 V	"	I0b	"	"	"
		"	62		"						"			0.5 V			4.5 V	"	"	I1b	"	"	"
		"	63		4.5 V						"				0.5 V		0.0 V	"	"	I2b	"	"	"
		"	64		4.5 V						"					0.5 V	4.5 V	"	"	I3b	"	"	"
		"	65								"						0.5 V	"	"	S0	"	"	"
		"	66								"							0.5 V	"	$\overline{E}$ b	"	"	"
	I_{OS}	3011	67	0.0 V	0.0 V				0.0 V	0.0 V	"						0.0 V		"	$\overline{Z}$ a	-60	-150	"
		3011	68		0.0 V						"	0.0 V	0.0 V				0.0 V	0.0 V	"	$\overline{Z}$ b	-60	-150	"
	I_{OD}		69	0.0 V	0.0 V				5.5 V	2.5 V	"						0.0 V		4.5 V	$\overline{Z}$ a	60		"
			70		0.0 V						"	2.5 V	5.5 V				0.0 V	0.0 V	4.5 V	$\overline{Z}$ b	60		"
	I_{CCH}	3005	71	0.0 V	0.0 V	0.0 V	0.0 V	0.0 V	0.0 V		"		0.0 V	0.0 V	0.0 V	0.0 V	0.0 V	0.0 V	5.5 V	V_{CC}		14	"
	I_{CCL}	3005	72	0.0 V	0.0 V	4.5 V	4.5 V	4.5 V	4.5 V		"		4.5 V	4.5 V	4.5 V	4.5 V	0.0 V	0.0 V	5.5 V	V_{CC}		20	"
2	Same tests, terminal conditions, and limits as subgroup 1, except T_C = +125°C and V_{IC} tests are omitted.																						
3	Same tests, terminal conditions, and limits as subgroup 1, except T_C = -55°C and V_{IC} tests are omitted.																						
7 Tc = 25°C	Func-tional test 3/	3014	73	A	A	A	A	A	A	H	GND	H	A	A	A	A	A	A	4/	All outputs			
		"	74	B	B	"	"	A	B	H	"	H	B	A	"	"	B	B	"				
		"	75	"	"	"	"	A	A	L	"	L	A	A	"	"	B	"	"				
		"	76	"	"	"	"	B	"	H	"	H	"	B	"	"	A	"	"				
		"	77	"	"	"	"	A	"	L	"	L	"	A	"	"	A	"	"				
		"	78	"	A	"	B	"	"	H	"	H	"	"	B	"	B	"	"				
		"	79	"	"	"	A	"	"	L	"	L	"	"	A	"	B	"	"				
		"	80	"	"	B	A	"	"	H	"	H	"	"	A	B	A	"	"				
		"	81	"	"	A	A	"	"	L	"	L	"	"	A	A	A	"	"				
		"	82	A	B	B	B	B	B	H	"	H	B	B	B	B	B	A	"				
		"	83	B	"	"	"	"	B	H	"	H	B	"	"	"	B	B	"				
		"	84	"	"	"	"	"	A	L	"	L	A	"	"	"	B	"	"				
		"	85	"	"	"	"	"	B	H	"	H	B	"	"	"	A	"	"				
		"	86	"	"	"	"	A	"	L	"	L	B	A	"	"	A	"	"				
		"	87	"	A	"	"	B	"	H	"	H	"	B	"	"	B	"	"				
		"	88	"	"	"	A	"	"	L	"	L	"	"	A	"	B	"	"				
		"	89	"	"	"	B	"	"	H	"	H	"	"	B	"	A	"	"				
		"	90	"	"	A	B	"	"	L	"	L	"	"	B	A	A	"	"				
8	Same tests, terminal conditions, and limits as for subgroup 7, except T_C = +125°C and T_C = -55°C.																						
9 T_C = 25°C	t_{PLH2}	3003	91	0.0 V	2.7 V	IN				OUT	GND						2.7 V		5.0 V	I3a to $\overline{Z}$ a	2.0	7.0	ns
		Fig. 3	92	"	2.7 V		IN			"	"						0.0 V		"	I2a to $\overline{Z}$ a	"	"	"
		"	93	"	0.0 V			IN		"	"						2.7 V		"	I1a to $\overline{Z}$ a	"	"	"
		"	94	"	0.0 V				IN	"	"						0.0 V		"	I0a to $\overline{Z}$ a	"	"	"

See footnotes at end of table.

TABLE III. Group A inspection for device type 09 - Continued.
Terminal conditions (pins not designated may be high ≥ 2.0 V; low ≤ 0.8 V; or open).

Subgroup	Symbol	MIL-STD-883 method	Cases E, F	1	2	3	4	5	6	7	8	9	10	11	12	13	14	15	16	Measured terminal	Limits		Unit
			Case 2 1/	2	3	4	5	7	8	9	10	12	13	14	15	17	18	19	20				
			Test no.	$\overline{E}$ a	S1	I3a	I2a	I1a	I0a	$\overline{Z}$ a	GND	$\overline{Z}$ b	I0b	I1b	I2b	I3b	S0	$\overline{E}$ b	V_{CC}		Min	Max	
9	t_{PLH2}	3003	95		0.0 V						"	OUT	IN				0.0 V	0.0 V	5.0 V	I0b to $\overline{Z}$ b	2.0	7.0	ns
T_C = 25°C		Fig. 4	96		0.0 V						"	"		IN			2.7 V	"	"	I1b to $\overline{Z}$ b	"	"	"
		"	97		2.7 V						"	"			IN		0.0 V	"	"	I2b to $\overline{Z}$ b	"	"	"
		"	98		2.7 V						"	"				IN	2.7 V	"	"	I3b to $\overline{Z}$ b	"	"	"
	t_{PHL2}	"	99	0.0 V	2.7 V	IN				OUT	"						2.7 V		"	I3a to $\overline{Z}$ a	1.7	6.0	"
		"	100	"	2.7 V		IN			"	"						0.0 V		"	I2a to $\overline{Z}$ a	"	"	"
		"	101	"	0.0 V			IN		"	"						2.7 V		"	I1a to $\overline{Z}$ a	"	"	"
		"	102	"	"				IN	"	"						0.0 V		"	I0a to $\overline{Z}$ a	"	"	"
		"	103		"						"	OUT	IN				0.0 V	0.0 V	"	I0b to $\overline{Z}$ b	"	"	"
		"	104		"						"	"		IN			2.7 V	"	"	I1b to $\overline{Z}$ b	"	"	"
		"	105		2.7 V						"	"			IN		0.0 V	"	"	I2b to $\overline{Z}$ b	"	"	"
		"	106		2.7 V						"	"				IN	2.7 V	"	"	I3b to $\overline{Z}$ b	"	"	"
	t_{PLH4}	"	107	0.0 V	2.7 V	2.7 V	0.0 V			OUT	"						IN		"	S0 to $\overline{Z}$ a	3.5	13.0	"
		"	108		2.7 V						"	OUT			0.0 V	2.7 V	IN	0.0 V	"	S0 to $\overline{Z}$ b	"	"	"
		"	109	0.0 V	IN	0.0 V		2.7 V		OUT	"						2.7 V		"	S1 to $\overline{Z}$ a	"	"	"
		"	110		IN						"	OUT		2.7 V		0.0 V	2.7 V	0.0 V	"	S1 to $\overline{Z}$ b	"	"	"
	t_{PHL4}	"	111	0.0 V	0.0 V			2.7 V	0.0 V	OUT	"						IN		"	S0 to $\overline{Z}$ a	"	"	"
		"	112		0.0 V						"	OUT	0.0 V	2.7 V			IN	0.0 V	"	S0 to $\overline{Z}$ b	"	"	"
		"	113	0.0 V	IN		2.7 V		0.0 V	OUT	"						0.0 V		"	S1 to $\overline{Z}$ a	"	"	"
		"	114		IN						"	OUT	0.0 V		2.7 V		0.0 V	0.0 V	"	S1 to $\overline{Z}$ b	"	"	"
	t_{PLH6}	"	115	IN	0.0 V				2.7 V	OUT	"						0.0 V		"	$\overline{E}$ a to $\overline{Z}$ a	3.5	14.0	"
		"	116		"						"	OUT	2.7 V				"	IN	"	$\overline{E}$ b to $\overline{Z}$ b	3.5	14.0	"
	t_{PHL6}	"	117	IN	"				2.7 V	OUT	"						"		"	$\overline{E}$ a to $\overline{Z}$ a	3.0	11.0	"
		"	118		"						"	OUT	2.7 V				"	IN	"	$\overline{E}$ b to $\overline{Z}$ b	3.0	11.0	"
10	Same tests and terminal conditions as subgroup 9, except T_C = +125°C and for the following limits. t_{PLH2} = 2.0 to 9.0 ns t_{PHL2} = 1.5 to 7.5 ns t_{PLH4} = 3.5 to 14.5 ns t_{PHL4} = 3.5 to 15.0 ns t_{PLH6} = 3.5 to 17.0 ns t_{PHL6} = 3.5 to 13.0 ns																						
11	Same tests, terminal conditions and limits as for subgroup 10, except T_C = -55°C.																						

1/ For case 2 pins not referenced are N/C.
2/ I_{IL} limits shall be as follows:

Test	Min/Max limits in mA for circuit		
	A	B	C
I_{IL}	-.25/-.60	-.03/-.60	-.03/-.60

3/ A = 2.5 V, B = 0.5 V. H ≥ 1.5 V, L ≤ 1.5 V.
4/ Perform function sequence at V_{CC} = 4.5 V and repeat at V_{CC} = 5.5 V.

TABLE III. Group A inspection for device type 10.

Terminal conditions (pins not designated may be high ≥ 2.0 V; low ≤ 0.8 V; or open).

Subgroup	Symbol	MIL-STD-883 method	Cases E, F	1	2	3	4	5	6	7	8	9	10	11	12	13	14	15	16	Measured terminal	Limits		Unit
			Case 2 1/	2	3	4	5	7	8	9	10	12	13	14	15	17	18	19	20				
			Test no.	$\overline{OE}$ a	S1	I3a	I2a	I1a	I0a	$\overline{Z}$ a	GND	$\overline{Z}$ b	I0b	I1b	I2b	I3b	S0	$\overline{OE}$ b	V_{CC}		Min	Max	
1	V_{OH}	3006	1	0.8 V	0.8 V				0.8 V	-3 mA	GND						0.8 V		4.5 V	$\overline{Z}$ a	2.4		V
Tc = 25°C		"	2	"	0.8 V			0.8 V		"	"						2.0 V		"	"	"		"
		"	3	"	2.0 V		0.8 V			"	"						0.8 V		"	"	"		"
		"	4	"	2.0 V	0.8 V				"	"						2.0 V		"	"	"		"
		"	5		0.8 V						"	-3 mA	0.8 V				0.8 V	0.8 V	"	$\overline{Z}$ b	"		"
		"	6		0.8 V						"	"		0.8 V			2.0 V	"	"	"	"		"
		"	7		2.0 V						"	"			0.8 V		0.8 V	"	"	"	"		"
		"	8		2.0 V						"	"				0.8 V	2.0 V	"	"	"	"		"
	V_{OL}	3007	9	0.8 V	0.8 V				2.0 V	20 mA	"						0.8 V		"	$\overline{Z}$ a		0.5	"
		"	10	"	0.8 V			2.0 V		"	"						2.0 V		"	"		"	"
		"	11	"	2.0 V		2.0 V			"	"						0.8 V		"	"		"	"
		"	12	"	2.0 V	2.0 V				"	"						2.0 V		"	"		"	"
		"	13		0.8 V						"	20 mA	2.0 V				0.8 V	0.8 V	"	$\overline{Z}$ b		"	"
		"	14		0.8 V						"	"		2.0 V			2.0 V	"	"	"		"	"
		"	15		2.0 V						"	"			2.0 V		0.8 V	"	"	"		"	"
		"	16		2.0 V						"	"				2.0 V	2.0 V	"	"	"		"	"
	V_{IC}		17	-18 mA							"								"	$\overline{OE}$ a		-1.2	"
			18		-18 mA						"								"	S1		"	"
			19			-18 mA					"								"	I3a		"	"
			20				-18 mA				"								"	I2a		"	"
			21					-18 mA			"								"	I1a		"	"
			22						-18 mA		"								"	I0a		"	"
			23								"		-18 mA						"	I0b		"	"
			24								"			-18 mA					"	I1b		"	"
			25								"				-18 mA				"	I2b		"	"
			26								"					-18 mA			"	I3b		"	"
			27								"						-18 mA		"	S0		"	"
			28								"							-18 mA	"	$\overline{OE}$ b		"	"
	I_{IH1}	3010	29	2.7 V							"								5.5 V	$\overline{OE}$ a		20	µA
		"	30		2.7 V						"								"	S1		"	"
		"	31	4.5 V	0.0 V	2.7 V					"						0.0 V		"	I3a		"	"
		"	32	"	0.0 V		2.7 V				"						4.5 V		"	I2a		"	"
		"	33	"	4.5 V			2.7 V			"						0.0 V		"	I1a		"	"
		"	34	"	"				2.7 V		"						4.5 V		"	I0a		"	"
		"	35		"						"		2.7 V				4.5 V	4.5 V	"	I0b		"	"
		"	36		"						"			2.7 V			0.0 V	"	"	I1b		"	"
		"	37		0.0 V						"				2.7 V		4.5 V	"	"	I2b		"	"
		"	38		0.0 V						"					2.7 V	0.0 V	"	"	I3b		"	"
		"	39								"						2.7 V		"	S0		"	"
		"	40								"							2.7 V	"	$\overline{OE}$ b		"	"
	I_{IH2}	"	41	7.0 V							"								"	$\overline{OE}$ a		100	"
		"	42		7.0 V						"								"	S1		"	"
		"	43	4.5 V	0.0 V	7.0 V					"						0.0 V		"	I3a		"	"
		"	44	"	0.0 V		7.0 V				"						4.5 V		"	I2a		"	"
		"	45	"	4.5 V			7.0 V			"						0.0 V		"	I1a		"	"
		"	46	"	4.5 V				7.0 V		"						4.5 V		"	I0a		"	"

See footnotes at end of table.

TABLE III. Group A inspection for device type 10 - Continued.

Terminal conditions (pins not designated may be high ≥ 2.0 V; low ≤ 0.8 V; or open).

Subgroup	Symbol	MIL-STD-883 method	Cases E, F	1	2	3	4	5	6	7	8	9	10	11	12	13	14	15	16	Measured terminal	Limits		Unit
			Case 2 1/	2	3	4	5	7	8	9	10	12	13	14	15	17	18	19	20				
			Test no.	$\overline{OE}$ a	S1	I3a	I2a	I1a	I0a	$\overline{Z}$ a	GND	$\overline{Z}$ b	I0b	I1b	I2b	I3b	S0	$\overline{OE}$ b	V_{CC}		Min	Max	
1 Tc = 25°C	I_{IH2}	3010	47		4.5 V						GND		7.0 V				4.5 V	4.5 V	5.5 V	I0b		100	µA
		"	48		4.5 V						"			7.0 V			0.0 V	"	"	I1b		"	"
		"	49		0.0 V						"				7.0 V		4.5 V	"	"	I2b		"	"
		"	50		0.0 V						"					7.0 V	0.0 V	"	"	I3b		"	"
		"	51								"						7.0 V		"	S0		"	"
		"	52								"							7.0 V	"	$\overline{OE}$ b		"	"
	I_{IL}	3009	53	0.5 V							"								"	$\overline{OE}$ a	2/	2/	mA
		"	54		0.5 V						"								"	S1	"	"	"
		"	55	0.0 V	4.5 V	0.5 V					"						4.5 V		"	I3a	"	"	"
		"	56	"	4.5 V		0.5 V				"						0.0 V		"	I2a	"	"	"
		"	57	"	0.0 V			0.5 V			"						4.5 V		"	I1a	"	"	"
		"	58	"	"				0.5 V		"						0.0 V		"	I0a	"	"	"
		"	59		"						"		0.5 V				0.0 V	0.0 V	"	I0b	"	"	"
		"	60		"						"			0.5 V			4.5 V	"	"	I1b	"	"	"
		"	61		4.5 V						"				0.5 V		0.0 V	"	"	I2b	"	"	"
		"	62		4.5 V						"					0.5 V	4.5 V	"	"	I3b	"	"	"
		"	63								"						0.5 V		"	S0	"	"	"
		"	64								"							0.5 V	"	$\overline{OE}$ b	"	"	"
	I_{OZH}		65	2.0 V	0.0 V				2.0 V	2.7 V	"						0.0 V		"	$\overline{Z}$ a		50	µA
			66		"						"	2.7 V	2.0 V				"	2.0 V	"	$\overline{Z}$ b		50	"
	I_{OZL}		67	2.0 V	"				0.8 V	0.5 V	"						"		"	$\overline{Z}$ a		-50	"
			68		"						"	0.5 V	0.8 V				"	2.0 V	"	$\overline{Z}$ b		-50	"
	I_{OS}		69	0.0 V	0.0 V				0.0 V	0.0 V	"						"		"	$\overline{Z}$ a	-60	-150	"
			70		0.0 V						"	0.0 V	0.0 V				"	0.0 V	"	$\overline{Z}$ b	-60	-150	"
	I_{OD}		71	0.0 V	0.0 V				5.5 V	2.5 V	"						"		4.5 V	$\overline{Z}$ a	35		"
			72		0.0 V						"	2.5 V	5.5 V				"	0.0 V	4.5 V	$\overline{Z}$ b	35		"
	I_{CCH}		73	0.0 V	0.0 V	0.0 V	0.0 V	0.0 V	0.0 V		"		0.0 V	0.0 V	0.0 V	0.0 V	0.0 V	0.0 V	5.5 V	V_{CC}		14	"
	I_{CCL}		74	0.0 V	0.0 V	0.0 V	0.0 V	0.0 V	4.5 V		"		4.5 V	0.0 V	0.0 V	0.0 V	0.0 V	0.0 V	"	V_{CC}		20	"
	I_{CCZ}		75	4.5 V	0.0 V	0.0 V	0.0 V	0.0 V	0.0 V		"		0.0 V	0.0 V	0.0 V	0.0 V	0.0 V	4.5 V	"	V_{CC}		23	"
2	Same tests, terminal conditions, and limits as subgroup 1, except T_C = +125°C and V_{IC} tests are omitted.																						
3	Same tests, terminal conditions, and limits as subgroup 1, except T_C = -55°C and V_{IC} tests are omitted.																						
7 Tc = 25°C	Func-tional test 3/	3014	76	B	B	B	B	B	B	H	GND	H	B	B	B	B	B	B	4/	All outputs			
		"	77	"	"	"	"	B	A	L	"	L	A	B	"	"	B	"	"				
		"	78	"	"	"	"	B	B	H	"	H	B	B	"	"	A	"	"				
		"	79	"	"	"	"	A	"	L	"	L	"	A	"	"	A	"	"				
		"	80	"	A	"	"	B	"	H	"	H	"	B	"	"	B	"	"				
		"	81	"	"	"	A	"	"	L	"	L	"	"	A	"	B	"	"				
		"	82	"	"	"	B	"	"	H	"	H	"	"	B	"	A	"	"				
		"	83	"	"	A	B	"	"	L	"	L	"	"	B	A	A	"	"				
		"	84	"	B	"	A	A	"	H	"	H	"	A	A	B	B	"	"				
		"	85	"	"	"	"	A	A	L	"	L	A	A	"	"	B	"	"				
		"	86	"	"	"	"	B	"	H	"	H	"	B	"	"	A	"	"				
		"	87	"	"	"	"	A	"	L	"	L	"	A	"	"	A	"	"				
		"	88	"	A	"	B	"	"	H	"	H	"	"	B	"	B	"	"				
		"	89	"	"	"	A	"	"	L	"	L	"	"	A	"	B	"	"				
		"	90	"	"	B	A	"	"	H	"	H	"	"	A	B	A	"	"				
		"	91	"	"	A	A	"	"	L	"	L	"	"	A	A	A	"	"				
8	Same tests, terminal conditions, and limits as for subgroup 7, except T_C = +125°C and T_C = -55°C.																						

See footnotes at end of table.

TABLE III. Group A inspection for device type 10 - Continued.
Terminal conditions (pins not designated may be high ≥ 2.0 V; low ≤ 0.8 V; or open).

Subgroup	Symbol	MIL-STD-883 method	Cases E, F	1	2	3	4	5	6	7	8	9	10	11	12	13	14	15	16	Measured terminal	Limits		Unit
			Case 2 1/	2	3	4	5	7	8	9	10	12	13	14	15	17	18	19	20				
			Test no.	$\overline{OE}$ a	S1	I3a	I2a	I1a	I0a	$\overline{Z}$ a	GND	$\overline{Z}$ b	I0b	I1b	I2b	I3b	S0	$\overline{OE}$ b	V_{CC}		Min	Max	
9	t_{PLH2}	3003	92	0.0 V	2.7 V	IN				OUT	GND						2.7 V		5.0 V	I3a to $\overline{Z}$ a	1.5	7.0	ns
T_C = 25°C		Fig. 4	93	"	2.7 V		IN			"	"						0.0 V		"	I2a to $\overline{Z}$ a	"	"	"
		"	94	"	0.0 V			IN		"	"						2.7 V		"	I1a to $\overline{Z}$ a	"	"	"
		"	95	"	"				IN	"	"						0.0 V		"	I0a to $\overline{Z}$ a	"	"	"
		"	96		"						"	OUT	IN				0.0 V	0.0 V	"	I0b to $\overline{Z}$ b	"	"	"
		"	97		"						"	"		IN			2.7 V	"	"	I1b to $\overline{Z}$ b	"	"	"
		"	98		2.7 V						"	"			IN		0.0 V	"	"	I2b to $\overline{Z}$ b	"	"	"
		"	99		2.7 V						"	"				IN	2.7 V	"	"	I3b to $\overline{Z}$ b	"	"	"
	t_{PHL2}	"	100	0.0 V	2.7 V	IN				OUT	"						2.7 V		"	I3a to $\overline{Z}$ a	"	6.0	"
		"	101	"	2.7 V		IN			"	"						0.0 V		"	I2a to $\overline{Z}$ a	"	"	"
		"	102	"	0.0 V			IN		"	"						2.7 V		"	I1a to $\overline{Z}$ a	"	"	"
		"	103	"	"				IN	"	"						0.0 V		"	I0a to $\overline{Z}$ a	"	"	"
		"	104		"						"	OUT	IN				0.0 V	0.0 V	"	I0b to $\overline{Z}$ b	"	"	"
		"	105		"						"	"		IN			2.7 V	"	"	I1b to $\overline{Z}$ b	"	"	"
		"	106		2.7 V						"	"			IN		0.0 V	"	"	I2b to $\overline{Z}$ b	"	"	"
		"	107		2.7 V						"	"				IN	2.7 V	"	"	I3b to $\overline{Z}$ b	"	"	"
	t_{PLH4}	"	108	0.0 V	2.7 V	2.7 V	0.0 V			OUT	"						IN		"	S0 to $\overline{Z}$ a	4.0	14.0	"
		"	109		2.7 V						"	OUT			0.0 V	2.7 V	IN	0.0 V	"	S0 to $\overline{Z}$ b	"	"	"
		"	110	0.0 V	IN	0.0 V		2.7 V		OUT	"						2.7 V		"	S1 to $\overline{Z}$ a	"	"	"
		"	111		IN						"	OUT		2.7 V		0.0 V	2.7 V	0.0 V	"	S1 to $\overline{Z}$ b	"	"	"
	t_{PHL4}	"	112	0.0 V	0.0 V			2.7 V	0.0 V	OUT	"						IN		"	S0 to $\overline{Z}$ a	"	11.0	"
		"	113		0.0 V						"	OUT	0.0 V	2.7 V			IN	0.0 V	"	S0 to $\overline{Z}$ b	"	"	"
		"	114	0.0 V	IN		2.7 V		0.0 V	OUT	"						0.0 V		"	S1 to $\overline{Z}$ a	"	"	"
		"	115		IN						"	OUT	0.0 V		2.7 V		"	0.0 V	"	S1 to $\overline{Z}$ b	"	"	"
	t_{PLZ6}	"	116	IN	0.0 V				2.7 V	OUT	"						"		"	$\overline{OE}$ a to $\overline{Z}$ a	2.0	6.0	"
		"	117		"						"	OUT	2.7 V				"	IN	"	$\overline{OE}$ b to $\overline{Z}$ b	"	"	"
	t_{PHZ6}	"	118	IN	"				0.0 V	OUT	"						"		"	$\overline{OE}$ a to $\overline{Z}$ a	"	"	"
		"	119		"						"	OUT	0.0 V				"	IN	"	$\overline{OE}$ b to $\overline{Z}$ b	"	"	"

See footnotes at end of table.

TABLE III. Group A inspection for device type 10 - Continued.
Terminal conditions (pins not designated may be high ≥ 2.0 V; low ≤ 0.8 V; or open).

Subgroup	Symbol	MIL-STD-883 method	Cases E, F	1	2	3	4	5	6	7	8	9	10	11	12	13	14	15	16	Measured terminal	Limits		Unit
			Case 2 1/	2	3	4	5	7	8	9	10	12	13	14	15	17	18	19	20				
			Test no.	$\overline{OE}$ a	S1	I3a	I2a	I1a	I0a	$\overline{Z}$ a	GND	$\overline{Z}$ b	I0b	I1b	I2b	I3b	S0	$\overline{OE}$ b	V_{CC}		Min	Max	
9	t_{PZL6}	3003	120	IN	0.0 V				2.7 V	OUT	GND						0.0 V		5.0 V	$\overline{OE}$ a to $\overline{Z}$ a	3.0	11.0	ns
T_C = 25°C		Fig. 4	121		"						"	OUT	2.7 V				"	IN	"	$\overline{OE}$ b to $\overline{Z}$ b	3.0	11.0	"
	t_{PZH6}	"	122	IN	"				0.0 V	OUT	"						"		"	$\overline{OE}$ a to $\overline{Z}$ a	3.0	8.0	"
		"	123		"						"	OUT	0.0 V				"	IN	"	$\overline{OE}$ b to $\overline{Z}$ b	3.0	8.0	"
10	Same tests and terminal conditions as subgroup 9, except T_C = +125°C and for the following limits. t_{PLH2} = 1.5 to 9.0 ns t_{PHL2} = 1.5 to 7.5 ns t_{PLZ6} = 2.0 to 8.5 ns t_{PZL6} = 3.5 to 15.5 ns t_{PLH4} = 4.0 to 16.0 ns t_{PHL4} = 4.0 to 14.0 ns t_{PHZ6} = 2.0 to 6.5 ns t_{PZH6} = 3.0 to 11.0 ns																						
11	Same tests, terminal conditions and limits as for subgroup 10, except T_C = -55°C.																						

1/ For case 2 pins not referenced are N/C.
2/ I_{IL} limits shall be as follows:

Test	Min/Max limits in mA for circuit		
	A	B	C
I_{IL}	-.25/-.60	-.03/-.60	-.03/-.60

3/ A = 2.5 V, B = 0.5 V. H ≥ 1.5 V, L ≤ 1.5 V.
4/ Perform function sequence at V_{CC} = 4.5 V and repeat at V_{CC} = 5.5 V.

5. PACKAGING

5.1 Packaging requirements. For acquisition purposes, the packaging requirements shall be as specified in the contract or order (see 6.2). When actual packaging of materiel is to be performed by DoD or in-house contractor personnel, these personnel need to contact the responsible packaging activity to ascertain packaging requirements. Packaging requirements are maintained by the Inventory Control Point's packaging activity within the Military Service or Defense Agency, or within the military service's system command. Packaging data retrieval is available from the managing Military Department's or Defense Agency's automated packaging files, CD-ROM products, or by contacting the responsible packaging activity.

6. NOTES

6.1 Intended use. Microcircuits conforming to this specification are intended for original equipment design applications and logistic support of existing equipment.

6.2 Acquisition requirements. Acquisition documents should specify the following:

a. Title, number, and date of the specification.

b. PIN and compliance identifier, if applicable (see 1.2).

c. Requirements for delivery of one copy of the conformance inspection data pertinent to the device inspection lot to be supplied with each shipment by the device manufacturer, if applicable.

d. Requirements for certificate of compliance, if applicable.

e. Requirements for notification of change of product or process to contracting activity in addition to notification to the qualifying activity, if applicable.

f. Requirements for failure analysis (including required test condition of method 5003 of MIL-STD-883), corrective action, and reporting of results, if applicable.

g. Requirements for product assurance options.

h. Requirements for special carriers, lead lengths, or lead forming, if applicable. These requirements should not affect the part number. Unless otherwise specified, these requirements will not apply to direct purchase by or direct shipment to the Government.

i. Requirements for "JAN" marking.

j. Packaging requirements (see 5.1).

6.3 Superseding information. The requirements of MIL-M-38510 have been superseded to take advantage of the available Qualified Manufacturer Listing (QML) system provided by MIL-PRF-38535. Previous references to MIL-M-38510 in this document have been replaced by appropriate references to MIL-PRF-38535. All technical requirements now consist of this specification and MIL-PRF-38535. The MIL-M-38510 specification sheet number and PIN have been retained to avoid adversely impacting existing government logistics systems and contractor's parts lists.

6.4 Qualification. With respect to products requiring qualification, awards will be made only for products which are, at the time of award of contract, qualified for inclusion in Qualified Manufacturers List QML-38535 whether or not such products have actually been so listed by that date. The attention of the contractors is called to these requirements, and manufacturers are urged to arrange to have the products that they propose to offer to the Federal Government tested for qualification in order that they may be eligible to be awarded contracts or purchase orders for the products covered by this specification. Information pertaining to qualification of products may be obtained from DLA Land and Maritime-VQ, P.O. Box, Columbus, Ohio 43218-3990.

6.5 Abbreviations, symbols, and definitions. The abbreviations, symbols, and definitions used herein are defined in MIL-PRF-38535, MIL-HDBK-1331, and as follows:

GND ..... Ground zero voltage potential
I_{IN} ..... Current flowing into an input terminal
V_{IN} ..... Voltage level at an input terminal

6.6 Logistic support. Lead materials and finishes (see 3.4) are interchangeable. Unless otherwise specified, microcircuits acquired for Government logistic support will be acquired to device class B (see 1.2.2), lead material and finish A (see 3.4). Longer length leads and lead forming should not affect the part number.

6.7 Substitutability. The cross-reference information below is presented for the convenience of users. Microcircuits covered by this specification will functionally replace the listed generic-industry type. Generic-industry microcircuit types may not have equivalent operational performance characteristics across military temperature ranges or reliability factors equivalent to MIL-M-35810 device types and may have slight physical variations in relation to case size. The presence of this information should not be deemed as permitting substitution of generic-industry types for MIL-M-38510 types or as a waiver of any of the provisions of MIL-PRF-38535.

Military device type	Generic-industry type
01	54F151A
02	54F153
03	54F157A
04	54F158A
05	54F251A
06	54F257A
07	54F258A
08	54F253
09	54F352
10	54F353

6.8 Manufacturers' designation. Manufacturers' circuits which form a part of this specification are designated with an "X" as shown in table IV herein.

TABLE IV. Manufacturers' designations.

Device type	Circuits			
	A	B	C	D
	National Semiconductor/ Fairchild Semiconductor	Motorola Inc.	Signetics Corp.	Texas Instruments
01	X	X		
02	X	X		X
03	X			X
04	X			
05	X	X		
06	X			X
07	X			
08	X	X		X
09		X		
10		X		

6.9 Changes from previous issue. Asterisks are not used in this revision to identify changes with respect to the previous issue due to the extensiveness of the changes.

CONCLUDING MATERIAL

Custodians:
Army - CR
Navy - EC
Air Force - 85
DLA - CC

Preparing activity:
DLA Land and Maritime- CC

(Project 5962-2011-001)

Review activities:
Army - MI, SM
Navy - AS, CG, MC, SH, TD
Air Force - 03, 19, 99

NOTE: The activities listed above were interested in this document as of the date of this document. Since organizations and responsibilities can change, you should verify the currency of the information above using the ASSIST Online database at https://assist.daps.dla.mil.