INCH-POUND

MIL-M-38510/30C
22 August 2008
SUPERSEDING
MIL-M-38510/30B
3 May 2005

MILITARY SPECIFICATION

MICROCIRCUITS, DIGITAL, DTL, NAND GATES MONOLITHIC SILICON

Inactive for new design after 6 October 1995.

This specification is approved for use by all Departments and Agencies of the Department of Defense.

The requirements for acquiring the product herein shall consist of this specification sheet and MIL-PRF 38535

1. SCOPE

1.1 Scope. This specification covers the detail requirements for monolithic silicon, DTL, positive logic NAND gating microcircuits. Two product assurance classes and a choice of case outlines and lead finishes are provided for each type and are reflected in the complete part number. For this product, the requirements of MIL-M-38510 have been superseded by MIL-PRF-38535, (see 6.4).

1.2 Part or Identifying Number (PIN). The PIN is in accordance with MIL-PRF-38535.

1.2.1 Device types. The device types are as follows:

Device type	Circuit
01	Dual, 4-input expandable NAND gate
02	Extendable hex inverter
03	Hex inverter
04	Quadruple, 2-input positive NAND gate
05	Triple, 3-input positive NAND gate

1.2.2 Device class. The device class is the product assurance level as defined in MIL-PRF-38535.

1.2.3 Case outlines. The case outlines are as designated in MIL-STD-1835 and as follows:

Outline letter	Descriptive designator	Terminals	Package style
A	GDFP5-F14 or CDFP6-F14	14	Flat pack
B	GDFP4-F14	14	Flat pack
C	GDIP1-T14 or CDIP2-T14	14	Dual-in-line
D	GDFP1-F14 or CDFP2-F14	14	Flat pack

Comments, suggestions, or questions on this document should be addressed to: Commander, Defense Supply Center Columbus, ATTN: DSCC-VAS, P. O. Box 3990, Columbus, OH 43218-3990, or emailed to bipolar@dscc.dla.mil. Since contact information can change, you may want to verify the currency of this address information using the ASSIST Online database at http://assist.daps.dla.mil.

AMSC N/A FSC 5962

1.3 Absolute maximum ratings.

Supply voltage range	-0.5 V dc to +8.0 V dc
Input voltage range	-1.5 V dc to +5.5 V dc
Storage temperature range	-65° to +150°C
Maximum power dissipation (P_D)	23 mW dc per gate
Lead temperature (soldering 10 seconds)	300°C
Thermal resistance, junction to case (θ_{JC})	(See MIL-STD-1835)
Junction temperature (T_J)	175°C

1.4 Recommended operating conditions.

Supply voltage (V_{CC})	4.5 V dc minimum to 5.5 V dc maximum
Minimum high level input voltage (V_{IH})	1.9 V dc @ 25°C
Maximum low level input voltage (V_{IL})	1.1 V dc @ 25°C
Normalized fanout (each output)	8 maximum
Case operating temperature range (T_C)	-55° to +125°C

2. APPLICABLE DOCUMENTS

2.1 General. The documents listed in this section are specified in sections 3, 4, or 5 of this specification. This section does not include documents cited in other sections of this specification or recommended for additional information or as examples. While every effort has been made to ensure the completeness of this list, document users are cautioned that they must meet all specified requirements of documents cited in sections 3, 4, or 5 of this specification, whether or not they are listed.

2.2 Government documents.

2.2.1 Specifications and standards. The following specifications and standards form a part of this specification to the extent specified herein. Unless otherwise specified, the issues of these documents are those cited in the solicitation or contract.

DEPARTMENT OF DEFENSE SPECIFICATIONS

MIL-PRF-38535 - Integrated Circuits (Microcircuits) Manufacturing, General Specification for.

DEPARTMENT OF DEFENSE STANDARDS

MIL-STD-883 - Test Method Standard for Microelectronics.
MIL-STD-1835 - Interface Standard Electronic Component Case Outlines

(Copies of these documents are available online at http://assist.daps.dla.mil/quicksearch/ or from the Standardization Document Order Desk, 700 Robbins Avenue, Building 4D, Philadelphia, PA 19111-5094.)

2.3 Order of precedence. Unless otherwise noted herein or in the contract, in the event of a conflict between the text of this specification and the references cited herein, the text of this document takes precedence. Nothing in this document, however, supersedes applicable laws and regulations unless a specific exemption has been obtained.

3. REQUIREMENTS

3.1 Qualification. Microcircuits furnished under this specification shall be products that are manufactured by a manufacturer authorized by the qualifying activity for listing on the applicable qualified manufacturers list before contract award (see 4.3 and 6.3).

3.2 Item requirements. The individual item requirements shall be in accordance with MIL-PRF-38535 and as specified herein or as modified in the device manufacturer's Quality Management (QM) plan. The modification in the QM plan shall not affect the form, fit, or function as described herein. This slash sheet has been modified to allow the manufacturer to use the alternate die/fabrication requirements of paragraph A.3.2.2 of MIL-PRF-38535 or other alternative approved by the qualifying activity.

3.3 Design, construction, and physical dimensions. The design, construction, and physical dimensions shall be as specified in MIL-PRF-38535 and herein.

3.3.1 Case outlines. The case outlines shall be as specified in 1.2.3.

3.3.2 Logic diagrams and terminal connections. The logic diagrams and terminal connections shall be as specified on figure 1.

3.3.3 Truth tables and logic equations. The truth tables and logic equations shall be as specified on figure 2.

3.3.4 Schematic circuits. The schematic circuits shall be maintained by the manufacturer and made available to the qualifying activity and the preparing activity upon request.

3.4 Lead material and finish. The lead material and finish shall be in accordance with MIL-PRF-38535 (see 6.6).

3.5 Electrical performance characteristics. The electrical performance characteristics are as specified in table I, and apply over the full recommended case operating temperature range, unless otherwise specified.

3.6 Electrical test requirements. The electrical test requirements for each device class shall be the subgroups specified in table II. The electrical tests for each subgroup are described in table III.

3.7 Marking. Marking shall be in accordance with MIL-PRF-38535.

3.7.1 Certification/compliance mark. The certification mark for device classes Q and V shall be a "QML" or "Q" as required in MIL-PRF-38535. For class Q product built in accordance with A.3.2.2 of MIL-PRF-38535 or other alternative approved by the qualifying activity, the "QD" certification mark shall be used in place of the "QML" or "Q" certification mark.

3.8 Microcircuit group assignment. The devices covered by this specification shall be in microcircuit group number 22 (see MIL-PRF-38535, appendix A).

TABLE I. Electrical performance characteristics.

Test	Symbol	Conditions 1/	Device types	Limits		Units
				Min	Max	
High-level output voltage	V_{OH}	V_{CC} = 4.5 V, I_{OH} = -0.12 mA	All	2.85		V
Low-level output voltage	V_{OL}	V_{CC} = 4.5 V, I_{OL} = 12 mA	All		0.45	V
Low-level input current	I_{IL}	V_{CC} = 5.5 V	All	-0.6	-1.50	mA
High-level input current	I_{IH}	V_{CC} = 5.5 V	01, 03 04, 05	0	5.0	μA
Short circuit output current	I_{OS}	V_{CC} = 5.5 V, V_{OUT} = 0 V, V_{IN} = GND 2/	All	-0.59	-1.34	mA
High-level supply current per gate	I_{CCH1}	V_{CC} = 5.0 V, V_{IN} = GND	All		1.47	mA
High-level supply current per gate	I_{CCH2}	V_{CC} = 8.0 V, V_{IN} = GND	All		2.75	mA
Low-level supply current per gate	I_{CCL}	V_{CC} = 5.0 V, V_{IN} = OPEN	All		3.25	mA
Collector cutoff current	I_{CEX}	V_{CC} = 4.5 V	All		100	μA
Propagation delay time low-to-high level output	t_{PLH}	V_{CC} = 5.0 V, C_L = 30 pF R_L = 3.9 kΩ	All	25	112	ns
Propagation delay time high-to-low level output	t_{PHL}	V_{CC} = 5.0 V, C_L = 50 pF R_L = 390 Ω	01, 03 04, 05	10	40	ns
			02	10	45	ns

1/ Complete terminal conditions shall be as specified in table III.
2/ Not more than one output should be shorted at a time.

TABLE II. Electrical test requirements.

MIL-PRF-38535 test requirements	Subgroups (see table III)	
	Class S devices	Class B devices
Interim electrical parameters	1	1
Final electrical test parameters	1*, 2, 3, 9	1*, 2, 3, 9
Group A test requirements	1, 2, 3, 9, 10, 11	1, 2, 3, 9
Group B electrical test parameters when using the method 5005 QCI option	1, 2, 3,	N/A
Group C end-point electrical parameters	1, 2, 3,	1, 2, 3
Additional electrical subgroups for Group C periodic inspections	N/A	10, 11
Group D end-point electrical parameters	1, 2, 3	1, 2, 3

*PDA applies to subgroup 1.

4. VERIFICATION

4.1 Sampling and inspection. Sampling and inspection procedures shall be in accordance with MIL-PRF-38535 or as modified in the device manufacturer's Quality Management (QM) plan. The modification in the QM plan shall not effect the form, fit, or function as described herein.

4.2 Screening. Screening shall be in accordance with MIL-PRF-38535 and shall be conducted on all devices prior to qualification and conformance inspection. The following additional criteria shall apply:

a. The burn-in test duration, test condition, and test temperature, or approved alternatives shall be as specified in the device manufacturer's QM plan in accordance with MIL-PRF-38535. The burn-in test circuit shall be maintained under document control by the device manufacturer's Technology Review Board (TRB) in accordance with MIL-PRF-38535 and shall be made available to the acquiring or preparing activity upon request. The test circuit shall specify the inputs, outputs, biases, and power dissipation, as applicable, in accordance with the intent specified in test method 1015 of MIL-STD-883.

b. Interim and final electrical test parameters shall be as specified in table II, except interim electrical parameters test prior to burn-in is optional at the discretion of the manufacturer.

c. Additional screening for space level product shall be as specified in MIL-PRF-38535.

4.3 Qualification inspection. Qualification inspection shall be in accordance with MIL-PRF-38535.

4.4 Technology Conformance Inspection (TCI). Technology conformance inspection shall be in accordance with MIL-PRF-38535 and herein for groups A, B, C, and D inspections (see 4.4.1 through 4.4.4).

4.4.1 Group A inspection. Group A inspection shall be in accordance with table III of MIL-PRF-38535 and as follows:

a. Tests shall be as specified in table II herein.

b. Subgroups 4, 5, 6, 7 and 8 shall be omitted.

4.4.2 Group B inspection. Group B inspection shall be in accordance with table II of MIL-PRF-38535.

4.4.3 Group C inspection. Group C inspection shall be in accordance with table IV of MIL-PRF-38535 and as follows:

a. End-point electrical parameters shall be as specified in table II herein.

b. The steady-state life test duration, test condition, and test temperature, or approved alternatives shall be as specified in the device manufacturer's QM plan in accordance with MIL-PRF-38535. The burn-in test circuit shall be maintained under document control by the device manufacturer's Technology Review Board (TRB) in accordance with MIL-PRF-38535 and shall be made available to the acquiring or preparing activity upon request. The test circuit shall specify the inputs, outputs, biases, and power dissipation, as applicable, in accordance with the intent specified in test method 1005 of MIL-STD-883.

c. Subgroups 3 and 4 shall be added to the group C inspection requirements for class C devices and shall consist of the tests, conditions, and limits specified for subgroups 10 and 11 of group A.

4.4.4 Group D inspection. Group D inspection shall be in accordance with table V of MIL-PRF-38535. End-point electrical parameters shall be as specified in table II herein.

4.5 Methods of inspection. Methods of inspection shall be specified as follows:

4.5.1 Voltage and current. All voltages given are referenced to the microcircuit ground terminal. Currents given are conventional and positive when flowing into the referenced terminal.

DEVICE TYPE 01

CASES A,B,C AND D

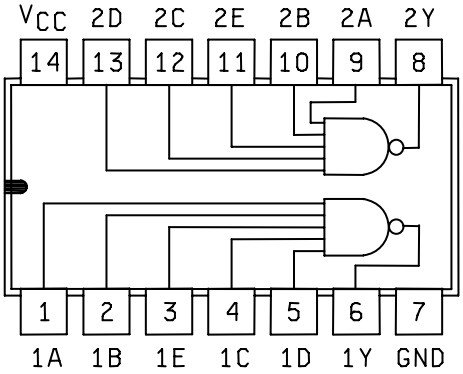

DEVICE TYPES 02 AND 03

CASES A,B,C AND D

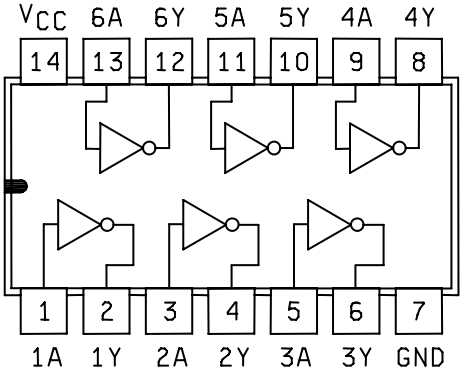

FIGURE 1. Logic diagram and terminal connections.

DEVICE TYPE 04

CASES A,B,C AND D

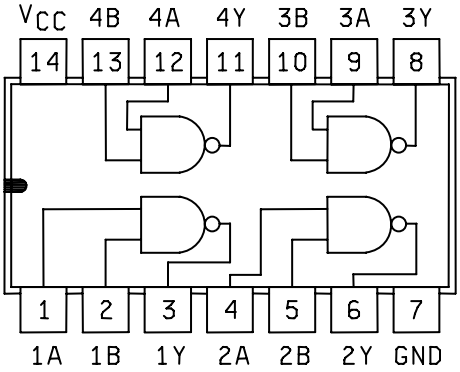

DEVICE TYPE 05

CASES A,B,C AND D

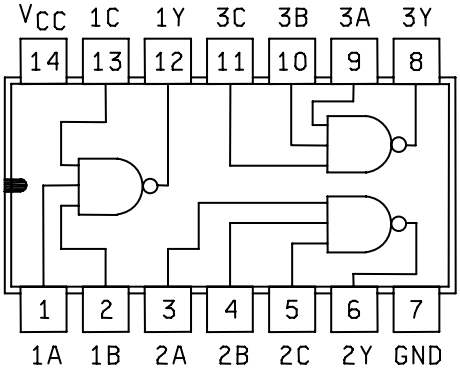

FIGURE 1. Logic diagram and terminal connections - Continued.

Device type 01

Truth table each gate					
Input					Output
A	B	C	D	E	Y
H	H	H	H	H	L
L	H	H	H	H	H
H	L	H	H	H	H
H	H	L	H	H	H
H	H	H	L	H	H
H	H	H	H	L	H
L	L	L	L	L	H

Positive logic: $Y = \overline{ABCDE}$

Device types 02 and 03

Truth table each gate	
Input	Output
A	Y
L	H
H	L

Positive logic: $Y = \overline{A}$

FIGURE 2. Truth tables.

Device type 04

Truth table each gate		
Input		Output
A	B	Y
L	L	H
H	L	H
L	H	H
H	H	L

Positive logic: $Y = \overline{A\,B}$

Device type 05

Truth table each gate			
Input			Output
A	B	C	Y
L	L	L	H
H	L	L	H
L	H	L	H
H	H	L	H
L	L	H	H
H	L	H	H
L	H	H	H
H	H	H	L

Positive logic: $Y = \overline{A\,B\,C}$

FIGURE 2. Truth tables - Continued.

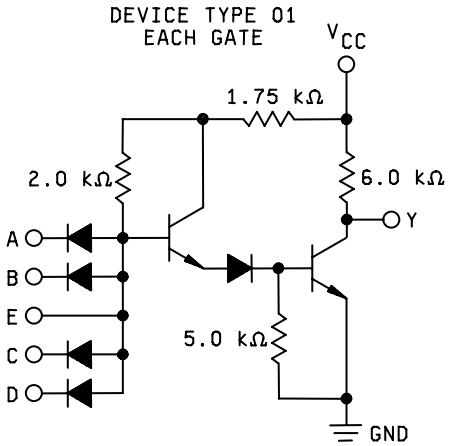

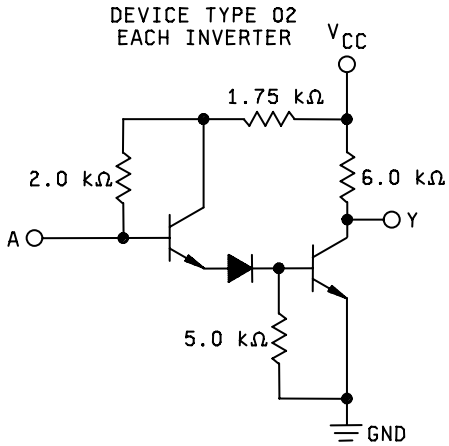

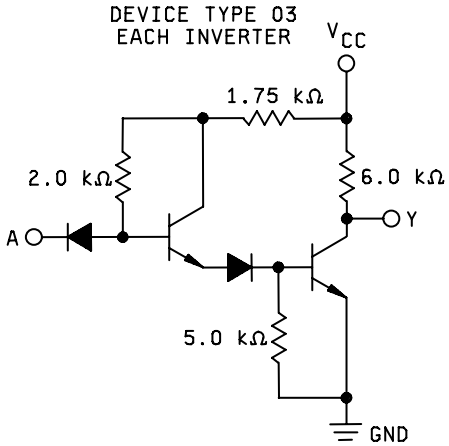

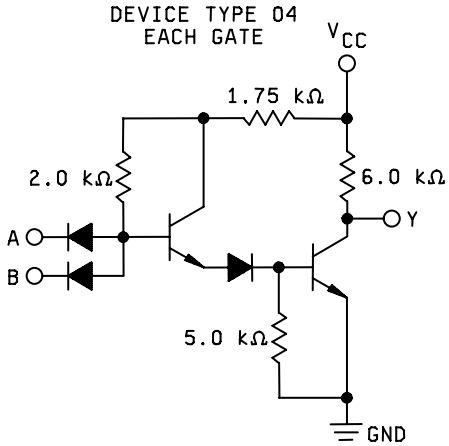

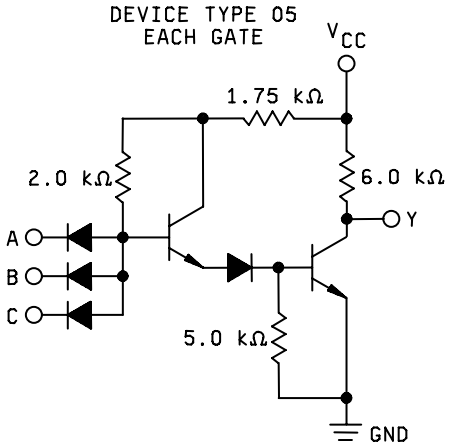

NOTE: All resistance values shown are nominal

FIGURE 3. Schematic circuits.

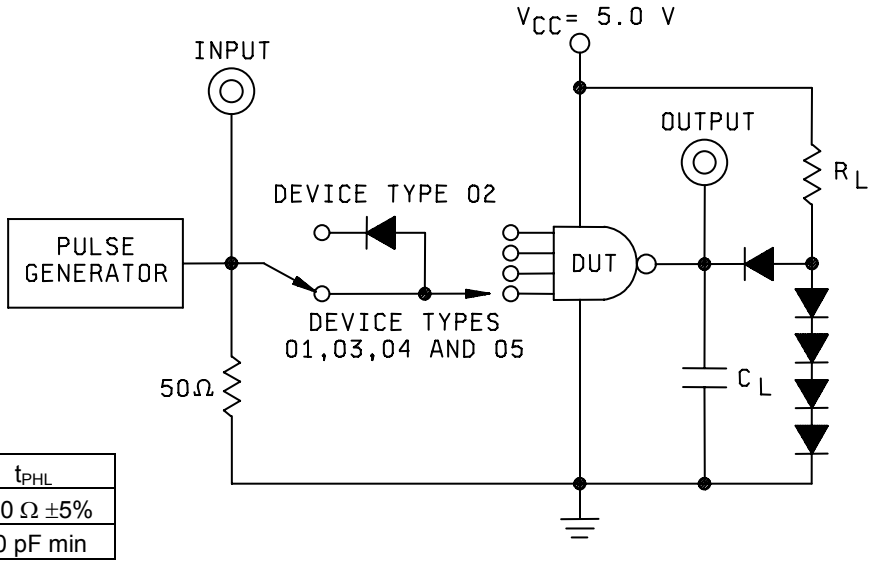

	t_{PLH}	t_{PHL}
R_L	3.9 kΩ	390 Ω ±5%
C_L	30 pF min	50 pF min

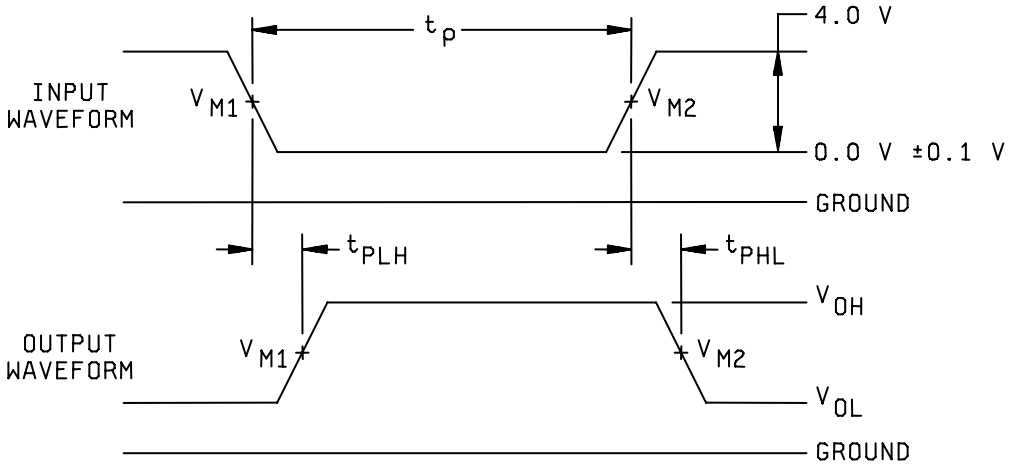

TEMP (°C)	V_{M1} (volts)	V_{M2} (volts)
25	1.5	1.5
125	1.2	1.2
-55	1.7	1.7

NOTES:

1. The generator has the following characteristics: V_{GEN} = 4.0 V minimum, t_{TLH} = 10 ns ± 90%, t_{THL} = 10 ns ± 90%, PRR = 500 kHz, t_P = 1μs.
2. All diodes are 1N4150 or equivalent.
3. C_L includes all jig and probe capacitance.

FIGURE 4. Switching time test circuit.

TABLE III. Group A inspection for device type 01. 1/

Subgroup	Symbol	MIL-STD-883 method	Cases A,B,C,D Test No.	1 1A	2 1B	3 1E	4 1C	5 1D	6 1Y	7 GND	8 2Y	9 2A	10 2B	11 2E	12 2C	13 2D	14 V_{CC}	Meas. terminal	Test limits Min	Max	Unit
1	V_{OL}	3007	1	1.9 V	1.9 V		1.9 V	1.9 V	12 mA	GND							4.5 V	1Y		0.4	V
T_C = 25°C	V_{OL}	3007	2							"	12 mA	1.9 V	1.9 V		1.9 V	1.9 V	"	2Y		0.4	"
"	V_{OH}	3006	3	1.1 V					-0.12 mA	"							"	1Y	3.4		
"	"	"	4		1.1 V				"	"							"	1Y	"		"
"	"	"	5				1.1 V		"	"							"	1Y	"		"
"	"	"	6					1.1 V	"	"							"	1Y	"	"	"
"	"	"	7							"	-0.12 mA	1.1 V					"	2Y	"		"
"	"	"	8							"	"		1.1 V				"	2Y	"		"
"	"	"	9							"	"				1.1 V		"	2Y	"		"
"	"	"	10							"	"					1.1 V	"	2Y	"		"
"	I_{OS}	3011	11	GND					GND	"							5.5 V	1Y	-.67	-1.34	mA
"	I_{OS}	3011	12								GND					GND	"	2Y	-.67	-1.34	mA
"	I_{IH}	3010	13	4.0 V	GND			GND		"							"	1A		2.0	µA
"	"	"	14	GND	4.0 V		GND	GND		"							"	1B		"	"
"	"	"	15	GND	GND	GND	4.0 V	GND		"							"	1C		"	"
"	"	"	16	GND	GND		GND	4.0 V		"							"	1D		"	"
"	"	"	17							"		4.0 V	GND		GND	GND	"	2A		"	"
"	"	"	18							"		GND	4.0 V		GND	GND	"	2B		"	"
"	"	"	19							"		GND	GND		4.0 V	GND	"	2C		"	"
"	"	"	20							"		GND	GND		GND	4.0 V	"	2D		"	"
"	I_{IL}	3009	21	0.4 V	4.0 V		4.0 V	4.0 V		"							"	1A	-0.6	-1.50	mA
"	"	"	22	4.0 V	0.4 V		4.0 V	"		"							"	1B	"	"	"
"	"	"	23	"	4.0 V		0.4 V	"		"							"	1C	"	"	"
"	"	"	24	"	4.0 V		4.0 V	0.4 V		"							"	1D	"	"	"
"	"	"	25							"		0.4 V	4.0 V		4.0 V	4.0 V	"	2A	"	"	"
"	"	"	26							"		4.0 V	0.4 V		4.0 V	"	"	2B	"	"	"
"	"	"	27							"		"	4.0 V		0.4 V	"	"	2C	"	"	"
"	"	"	28							"		"	4.0 V		4.0 V	0.4 V	"	2D	"	"	"
"	I_{CEX}			1.1 V					4.5 V	"							4.5 V	1Y		50	µA
"	I_{CEX}		30							"	4.5 V				1.1 V		4.5 V	2Y		50	µA
"	I_{CCL}	3005	31							"							5.0 V	V_{CC}		6.5	mA
"	I_{CCH1}	"	32	GND						"						GND	5.0 V	V_{CC}		2.94	mA
"	I_{CCH2}	3029	33	GND						"						GND	8.0V	V_{CC}		5.5	mA
"	$V_{OH(E)}$	3006	34			1.8 V			-0.12 mA	"							4.5 V	1Y	3.4		
	$V_{OH(E)}$	3006	35							"	-0.12 mA			1.8 V			"	2Y	3.4		V
2	V_{OL}	3007	36	1.7 V	1.7 V		1.7 V	1.7 V	12 mA	"							"	1Y		0.45	V
T_C = 125°C	V_{OL}	3007	37							"	12 mA	1.7 V	1.7 V		1.7 V	1.7 V	"	2Y		0.45	V
"	V_{OH}	3006	38	0.8 V					-0.12 mA	"							"	1Y	2.85		
"	"	"	39		0.8 V				"	"							"	1Y	"		"
"	"	"	40				0.8 V		"	"							"	1Y	"		"
"	"	"	41					0.8 V	"	"							"	1Y	"	"	"
"	"	"	42							"	-0.12 mA	0.8 V					"	2Y	"		"
"	"	"	43							"	"		0.8 V				"	2Y	"		"
"	"	"	44							"	"				0.8 V		"	2Y	"		"
"	"	"	45							"	"					0.8 V	"	2Y	"		"
"	I_{OS}	3011	46	GND					GND	"							5.5 V	1Y	-.59	-1.3	mA
"	I_{OS}	3011	47							"	GND					GND	5.5 V	2Y	-.59	-1.3	mA

See footnote at end of table.

TABLE III. Group A inspection for device type 01 – Continued.

Subgroup	Symbol	MIL-STD-883 method	Cases A,B,C,D Test No.	1 1A	2 1B	3 1E	4 1C	5 1D	6 1Y	7 GND	8 2Y	9 2A	10 2B	11 2E	12 2C	13 2D	14 V_{CC}	Meas. terminal	Test limits Min	Max	Unit
2	I_{IH}	3010	48	4.0 V	GND			GND		GND							5.5 V	1A		5	µA
T_C = 125°C	"	"	49	GND	4.0 V		GND	"		"							"	1B		"	"
"	"	"	50	"	GND	GND	4.0 V	"		"							"	1C		"	"
"	"	"	51	"	GND		GND	4.0 V		"							"	1D		"	"
"	"	"	52							"		4.0 V	GND		GND	GND	"	2A		"	"
"	"	"	53							"		GND	4.0 V		GND	"	"	2B		"	"
"	"	"	54							"		"	GND		4.0 V	"	"	2C		"	"
"	"	"	55							"		"	GND		GND	4.0 V	"	2D		"	"
"	I_{IL}	3009	56	0.4 V	4.0 V		4.0 V	4.0 V		"							"	1A	-0.6	-1.50	mA
"	"	"	57	4.0 V	0.4 V		4.0 V	"		"							"	1B	"	"	"
"	"	"	58	"	4.0 V		0.4 V	"		"							"	1C	"	"	"
"	"	"	59	"	4.0 V		4.0 V	0.4 V		"							"	1D	"	"	"
"	"	"	60	"						"		0.4 V	4.0 V		4.0 V	4.0 V	"	2A	"	"	"
"	"	"	61	"						"		4.0 V	0.4 V		4.0 V	"	"	2B	"	"	"
"	"	"	62	"						"		"	4.0 V		0.4 V	"	"	2C	"	"	"
"	"	"	63	"						"		"	4.0 V		4.0 V	0.4 V	"	2D	"	"	"
"	I_{CEX}			0.8 V					4.5 V	"							4.5 V	1Y		100	µA
"	I_{CEX}		65							"	4.5 V				0.8 V		4.5 V	2Y		100	µA
"	I_{CCL}	3005	66							"							5.0 V	V_{CC}		6.5	mA
"	I_{CCH1}	"	67	GND						"						GND	5.0 V	V_{CC}		2.94	mA
"	I_{CCH2}	"	68	GND						"						GND	8.0 V	V_{CC}		5.5	mA
"	$V_{OH(E)}$	3006	69			1.3 V			-0.12 mA	"							4.5 V	1Y	3.3		
"	$V_{OH(E)}$	3006	70							"	-0.12 mA			1.3 V			"	2Y	3.3		"
3	V_{OL}	3007	71	2.1 V	2.1 V		2.1 V	2.1 V	12 mA	"							"	1Y		0.4	"
T_C = -55°C	V_{OL}	3007	72							"	12 mA	2.1 V	2.1 V		2.1 V	2.1 V	"	2Y		0.4	"
"	V_{OH}	3006	73	1.4 V					-0.12 mA	"							"	1Y	3.3		
"	"	"	74		1.4 V				"	"							"	1Y	"		"
"	"	"	75				1.4 V		"	"							"	1Y	"		"
"	"	"	76					1.4 V	"	"							"	1Y	"	"	"
"	"	"	77							"	-0.12 mA	1.4 V					"	2Y	"		"
"	"	"	78							"	"		1.4 V				"	2Y	"		"
"	"	"	79							"	"				1.4 V		"	2Y	"		"
"	"	"	80							"	"					1.4 V	"	2Y	"		"
"	I_{OS}	3011	81	GND					GND	"							5.5 V	1Y	-.67	-1.34	mA
"	I_{OS}	3011	82							"	GND					GND	"	2Y	-.67	-1.34	mA
"	I_{IH}	3010	83	4.0 V	GND			GND		"							"	1A		2.0	µA
"	"	"	84	GND	4.0 V		GND	"		"							"	1B		"	"
"	"	"	85	"	GND	GND	4.0 V	"		"							"	1C		"	"
"	"	"	86	"	GND		GND	4.0 V		"							"	1D		"	"
"	"	"	87							"		4.0 V	GND		GND	GND	"	2A		"	"
"	"	"	88							"		GND	4.0 V		GND	"	"	2B		"	"
"	"	"	89							"		"	GND		4.0 V	"	"	2C		"	"
"	"	"	90							"		"	GND		GND	4.0 V	"	2D		"	"
"	I_{IL}	3009	91	0.4 V	4.0 V		4.0 V	4.0 V		"							"	1A	-0.6	-1.50	mA
"	"	"	92	4.0 V	0.4 V		4.0 V	"		"							"	1B	"	"	"
"	"	"	93	"	4.0 V		0.4 V	"		"							"	1C	"	"	"
"	"	"	94	"	4.0 V		4.0 V	0.4 V		"							"	1D	"	"	"
"	"	"	95							"		0.4 V	4.0 V		4.0 V	4.0 V	"	2A	"	"	"
"	"	"	96							"		4.0 V	0.4 V		4.0 V	"	"	2B	"	"	"
"	"	"	97							"		"	4.0 V		0.4 V	"	"	2C	"	"	"
"	"	"	98							"		"	4.0 V		4.0 V	0.4 V	"	2D	"	"	"

See footnote at end of table.

TABLE III. Group A inspection for device type 01 – Continued.

Subgroup	Symbol	MIL-STD-883 method	Cases A,B,C,D Test No.	1 1A	2 1B	3 1E	4 1C	5 1D	6 1Y	7 GND	8 2Y	9 2A	10 2B	11 2E	12 2C	13 2D	14 V_{CC}	Meas. terminal	Test limits Min	Max	Unit
3	I_{CEX}			1.4 V					4.5 V	“							4.5 V	1Y		50	μA
T_C = -55°C	I_{CEX}		100							“	4.5 V					1.4 V	4.5 V	2Y		50	μA
“	I_{CCL}	3005	101							“							5.0 V	V_{CC}		6.5	mA
“	I_{CCH1}	“	102	GND						“						GND	5.0 V	V_{CC}		2.94	mA
“	I_{CCH2}	“	103	GND						“						GND	8.0 V	V_{CC}		5.5	mA
“	$V_{OH(E)}$	3006	104			2.1 V			-0.12 mA	“							4.5 V	1Y	3.3		
“	$V_{OH(E)}$	3006	105							“	-0.12 mA			2.1 V			4.5 V	2Y	3.3		V
9	t_{PHL}	3003	106	IN					OUT	“							5.0 V	1A to 1Y	10	30	ns
T_C = 25°C	t_{PHL}	(Fig. 4)	107							“	OUT	IN					“	2A to 2Y	10	30	“
“	t_{PLH}	“	108	IN					OUT	“							“	1A to 1Y	25	80	“
“	t_{PLH}	“	109							“	OUT	IN					“	2A to 2Y	25	80	“
10	t_{PHL}	“	110	IN					OUT	“								1A to 1Y	10	35	“
T_C = 125°C	t_{PHL}	“	111							“	OUT	IN					“	2A to 2Y	10	35	“
“	t_{PLH}	“	112	IN					OUT	“							“	1A to 1Y	25	112	“
“	t_{PLH}	“	113							“	OUT	IN				“	“	2A to 2Y	25	112	“
11	t_{PHL}	“	114	IN					OUT	“								1A to 1Y	10	40	“
T_C = -55°C	t_{PHL}	“	115							“	OUT	IN					“	2A to 2Y	10	40	“
“	t_{PLH}	“	116	IN					OUT	“							“	1A to 1Y	25	80	“
“	t_{PLH}	“	117							“	OUT	IN				“	“	2A to 2Y	25	80	“

1/ Pins not designated may be HIGH level logic, LOW level logic or open.

TABLE III. Group A inspection for device type 02.

Subgroup	Symbol	MIL-STD-883 method	Cases A,B,C,D	1	2	3	4	5	6	7	8	9	10	11	12	13	14	Meas. terminal	Test limits		
			Test No.	1A	1Y	2A	2Y	3A	3Y	GND	4Y	4A	5Y	5A	6Y	6A	V_{CC}		Min	Max	Unit
1	V_{OL}	3007	1	2.6 V	12 mA					GND							4.5 V	1Y		0.4	V
T_C = 25°C	"	"	2			2.6 V	12 mA			"							"	2Y		"	"
"	"	"	3					2.6 V	12 mA	"							"	3Y		"	"
"	"	"	4							"	12 mA	2.6 V					"	4Y		"	"
"	"	"	5							"			12 mA	2.6 V			"	5Y		"	"
"	"	"	6							"					12 mA	2.6 V	"	6Y		"	"
"	V_{OH}	3006	7	1.7 V	-0.12 mA					"							"	1Y	3.4		
"	"	"	8			1.7 V	-0.12 mA			"							"	2Y	"		"
"	"	"	9					1.7 V	-0.12 mA	"							"	3Y	"	"	"
"	"	"	10							"	-0.12 mA	1.7 V					"	4Y	"		"
"	"	"	11							"			-0.12 mA	1.7 V			"	5Y	"		"
"	"	"	12							"					-0.12 mA	1.7 V	"	6Y	"		"
"	I_{OS}	3011	13	GND	GND					"							5.5 V	1Y	-.67	-1.34	mA
"	"	"	14			GND	GND			"							"	2Y	"	"	"
"	"	"	15					GND	GND	"							"	3Y	"	"	"
"	"	"	16							"	GND	GND					"	4Y	"	"	"
"	"	"	17							"			GND	GND			"	5Y	"	"	"
"	"	"	18							"					GND	GND	"	6Y	"	"	"
"	I_{IL}	3009	19	1.0 V						"							"	1A	-0.6	-1.50	mA
"	"	"	20			1.0 V				"							"	2A	"	"	"
"	"	"	21					1.0 V		"							"	3A	"	"	"
"	"	"	22							"		1.0 V					"	4A	"	"	"
"	"	"	23							"				1.0 V			"	5A	"	"	"
"	"	"	24							"						1.0 V	"	6A	"	"	"
"	I_{CEX}		25	1.7 V	4.5 V					"							4.5 V	1Y		50	µA
"	"		26			1.7 V	4.5 V			"							"	2Y		"	"
"	"		27					1.7 V	4.5 V	"							"	3Y		"	"
"	"		28							"	4.5 V	1.7 V					"	4Y		"	"
"	"		29							"			4.5 V	1.7 V			"	5Y		"	"
"	"		30							"					4.5 V	1.7 V	"	6Y		"	"
"	I_{CCL}	3005	31							"							5.0 V	V_{CC}		19.5	mA
"	I_{CCH1}	"	32	GND		GND				"		GND		GND		GND	5.0 V	V_{CC}		8.82	mA
"	I_{CCH2}	"	33	GND		GND				"		GND		GND		GND	8.0 V	V_{CC}		16.5	mA
2	V_{OL}	3007	34	2.21 V	12 mA					"							4.5 V	1Y		0.45	V
T_C = 125°C	"	"	35			2.21 V	12 mA GND			"							"	2Y		"	"
"	"	"	36				GND	2.21 V	12 mA	"							"	3Y		"	"
"	"	"	37							"	12 mA	2.21 V					"	4Y		"	"
"	"	"	38							"			12 mA	2.21 V			"	5Y		"	"
"	"	"	39							"					12 mA	2.21 V	"	6Y		"	"
"	V_{OH}	3006	40	1.21 V	-0.12 mA					"							"	1Y	2.85		
"	"	"	41			1.21 V	-0.12 mA			"							"	2Y	"		"
"	"	"	42					1.21 V	-0.12 mA	"							"	3Y	"	"	"
"	"	"	43							"	-0.12 mA	1.21 V					"	4Y	"	"	"
"	"	"	44							"			-0.12 mA	1.21 V			"	5Y	"		"
"	"	"	45							"					-0.12 mA	1.21 V	"	6Y	"		"

See footnote at end of table.

TABLE III. Group A inspection for device type 02 – Continued.

Subgroup	Symbol	MIL-STD-883 method	Cases A,B,C,D Test No.	1 1A	2 1Y	3 2A	4 2Y	5 3A	6 3Y	7 GND	8 4Y	9 4A	10 5Y	11 5A	12 6Y	13 6A	14 V_{CC}	Meas. terminal	Test limits Min	Max	Unit
2	I_{OS}	3011	46	GND	GND					GND							5.5 V	1Y	-.59	-1.3	mA
T_C = 125°C	"	"	47			GND	GND			"							"	2Y	"	"	"
"	"	"	48					GND	GND	"							"	3Y	"	"	"
"	"	"	49							"	GND	GND					"	4Y	"	"	"
"	"	"	50							"			GND	GND			"	5Y	"	"	"
"	"	"	51							"					GND	GND	"	6Y	"	"	"
"	I_{IL}	3009	52	0.81 V						"							"	1A	-0.6	-1.50	mA
"	"	"	53			0.81 V				"							"	2A	"	"	"
"	"	"	54					0.81 V		"							"	3A	"	"	"
"	"	"	55							"		0.81 V					"	4A	"	"	"
"	"	"	56							"				0.81 V			"	5A	"	"	"
"	"	"	57							"						0.81 V	"	6A	"	"	"
"	I_{CEX}			1.21 V	4.5 V					"							4.5 V	1Y		100	µA
"	"		59			1.21 V	4.5 V			"							"	2Y		"	"
"	"		60					1.21 V	4.5 V	"							"	3Y		"	"
"	"		61							"	4.5 V	1.21 V					"	4Y		"	"
"	"	58	62							"			4.5 V	1.21 V			"	5Y		"	"
"	"		63							"					4.5 V	1.21 V	"	6Y		"	"
"	I_{CCL}	3005	64							"							5.0 V	V_{CC}		19.5	mA
"	I_{CCH1}	"	65	GND		GND				"		GND		GND		GND	5.0 V	V_{CC}		8.82	mA
"	I_{CCH2}	"	66	GND		GND				"		GND		GND		GND	8.0 V	V_{CC}		16.5	mA
3	V_{OL}	3007	67	3.02 V	12 mA					"							4.5 V	1Y		0.4	V
T_C = -55°C	"	"	68			3.02 V	12 mA GND			"							"	2Y		"	"
"	"	"	69				GND	3.02 V	12 mA	"							"	3Y		"	"
"	"	"	70							"	12 mA	3.02 V					"	4Y		"	"
"	"	"	71							"			12 mA	3.02 V			"	5Y		"	"
"	"	"	72							"					12 mA	3.02 V	"	6Y		"	"
"	V_{OH}	3006	73	2.32 V	-0.12 mA					"							"	1Y	3.3		
"	"	"	74			2.32 V	-0.12 mA			"							"	2Y	"		"
"	"	"	75					2.32 V	-0.12 mA	"							"	3Y	"	"	"
"	"	"	76							"	-0.12 mA	2.32 V					"	4Y	"		"
"	"	"	77							"			-0.12 mA	2.32 V			"	5Y	"		"
"	"	"	78							"					-0.12 mA	2.32 V	"	6Y	"		"
"	I_{OS}	3011	79	GND	GND					"							5.5 V	1Y	-.67	-1.34	mA
"	"	"	80			GND	GND			"							"	2Y	"	"	"
"	"	"	81					GND	GND	"							"	3Y	"	"	"
"	"	"	82							"	GND	GND					"	4Y	"	"	"
"	"	"	83							"			GND	GND			"	5Y	"	"	"
"	"	"	84							"					GND	GND	"	6Y	"	"	"

See footnote at end of table.

TABLE III. Group A inspection for device type 02 – Continued.

Subgroup	Symbol	MIL-STD-883 method	Cases A,B,C,D Test No.	1 1A	2 1Y	3 2A	4 2Y	5 3A	6 3Y	7 GND	8 4Y	9 4A	10 5Y	11 5A	12 6Y	13 6A	14 V_{CC}	Meas. terminal	Test limits Min	Max	Unit
3	I_{IL}	3009	85	1.16 V						GND							5.5 V	1A	-0.6	-1.50	mA
T_C = -55°C	“	“	86			1.16 V				“							“	2A	“	“	“
“	“	“	87					1.16 V		“							“	3A	“	“	“
“	“	“	88							“		1.16 V					“	4A	“	“	“
“	“	“	89							“				1.16 V			“	5A	“	“	“
“	“	“	90							“						1.16 V	“	6A	“	“	“
“	I_{CEX}			2.32 V	4.5 V					“							4.5 V	1Y		50	µA
“	“		92			2.32 V	4.5 V			“							“	2Y		“	“
“	“		93					2.32 V	4.5 V	“							“	3Y		“	“
“	“		94							“	4.5 V	2.32 V					“	4Y		“	“
“	“	91	95							“			4.5 V	2.32 V			“	5Y		“	“
“	“		96							“					4.5 V	2.32 V	“	6Y		“	“
“	I_{CCL}	3005	97							“							5.0 V	V_{CC}		19.5	mA
“	I_{CCH1}	“	98	GND		GND				“		GND		GND		GND	5.0 V	V_{CC}		8.82	mA
“	I_{CCH2}	“	99	GND		GND				“		GND		GND		GND	8.0 V	V_{CC}		16.5	mA
9	t_{PHL}	3003	100	IN	OUT					“							5.0 V	1A to 1Y	10	35	ns
T_C = 25°C	“	(Fig. 4)	101			IN	OUT GND			“							“	2A to 2Y	“	“	“
“	“	“	102					IN	OUT	“							“	3A to 3Y	“	“	“
“	“	“	103							“	OUT	IN					“	4A to 4Y	“	“	“
“	“	“	104							“			OUT	IN			“	5A to 5Y	“	“	“
“	“	“	105							“					OUT	IN	“	6A to 6Y	“	“	“
“	t_{PLH}	“	106	IN	OUT					“							“	1A to 1Y	25	80	“
“	“	“	107			IN	OUT			“							“	2A to 2Y	“	“	“
“	“	“	108					IN	OUT	“							“	3A to 3Y	“	“	“
“	“	“	109							“	OUT	IN					“	4A to 4Y	“	“	“
“	“	“	110							“			OUT	IN			“	5A to 5Y	“	“	“
“	“	“	111							“					OUT	IN	“	6A to 6Y	“	“	“
10	t_{PHL}	“	112	IN	OUT					“							“	1A to 1Y	10	40	“
T_C = 125°C	“	“	113			IN	OUT			“							“	2A to 2Y	“	“	“
“	“	“	114					IN	OUT	“							“	3A to 3Y	“	“	“
“	“	“	115							“	OUT	IN					“	4A to 4Y	“	“	“
“	“	“	116							“			OUT	IN			“	5A to 5Y	“	“	“
“	“	“	117							“					OUT	IN	“	6A to 6Y	“	“	“
“	t_{PLH}	“	118	IN	OUT					“							“	1A to 1Y	25	112	“
“	“	“	119			IN	OUT			“							“	2A to 2Y	“	“	“
“	“	“	120					IN	OUT	“							“	3A to 3Y	“	“	“
“	“	“	121							“	OUT	IN					“	4A to 4Y	“	“	“
“	“	“	122							“			OUT	IN			“	5A to 5Y	“	“	“
“	“	“	123							“					OUT	IN	“	6A to 6Y	“	“	“
11	t_{PHL}	3003	124	IN	OUT					“							“	1A to 1Y	10	45	“
T_C = -55°C	“	“	125			IN	OUT			“							“	2A to 2Y	“	“	“
“	“	“	126					IN	OUT	“							“	3A to 3Y	“	“	“
“	“	“	127							“	OUT	IN					“	4A to 4Y	“	“	“
“	“	“	128							“			OUT	IN			“	5A to 5Y	“	“	“
“	“	“	129							“					OUT	IN	“	6A to 6Y	“	“	“
“	t_{PLH}	“	130	IN	OUT					“							“	1A to 1Y	25	80	“
“	“	“	131			IN	OUT			“							“	2A to 2Y	“	“	“
“	“	“	132					IN	OUT	“							“	3A to 3Y	“	“	“
“	“	“	133							“	OUT	IN					“	4A to 4Y	“	“	“
“	“	“	134							“			OUT	IN			“	5A to 5Y	“	“	“
“	“	“	135							“					OUT	IN	“	6A to 6Y	“	“	“

1/ Pins not designated may be HIGH level logic, LOW level logic or open.

TABLE III. Group A inspection for device type 03. 1/

Subgroup	Symbol	MIL-STD-883 method	Cases A,B,C,D Test No.	1 1A	2 1Y	3 2A	4 2Y	5 3A	6 3Y	7 GND	8 4Y	9 4A	10 5Y	11 5A	12 6Y	13 6A	14 V_{CC}	Meas. terminal	Test limits Min	Max	Unit
1	V_{OL}	3007	1	1.9 V	12 mA					GND							4.5 V	1Y		0.4	V
T_C = 25°C	"	"	2			1.9 V	12 mA			"							"	2Y		"	"
"	"	"	3					1.9 V	12 mA	"							"	3Y		"	"
"	"	"	4							"	12 mA	1.9 V					"	4Y		"	"
"	"	"	5							"			12 mA	1.9 V			"	5Y		"	"
"	"	"	6							"					12 mA	1.9 V	"	6Y		"	"
"	V_{OH}	3006	7	1.1 V	-0.12 mA					"							"	1Y	3.4		
"	"	"	8			1.1 V	-0.12 mA			"							"	2Y	"		"
"	"	"	9					1.1 V	-0.12 mA	"							"	3Y	"	"	"
"	"	"	10							"	-0.12 mA	1.1 V					"	4Y	"		"
"	"	"	11							"			-0.12 mA	1.1 V			"	5Y	"		"
"	"	"	12							"					-0.12 mA	1.1 V	"	6Y	"		"
"	I_{OS}	3011	13	GND	GND					"							5.5 V	1Y	-.67	-1.34	mA
"	"	"	14			GND	GND			"							"	2Y	"	"	"
"	"	"	15					GND	GND	"							"	3Y	"	"	"
"	"	"	16							"	GND	GND					"	4Y	"	"	"
"	"	"	17							"			GND	GND			"	5Y	"	"	"
"	"	"	18							"					GND	GND	"	6Y	"	"	"
"	I_{IH}	3010	19	4.0 V						"							"	1A		2	µA
"	"	"	20			4.0 V				"							"	2A		"	"
"	"	"	21					4.0 V		"							"	3A		"	"
"	"	"	22							"		4.0 V					"	4A		"	"
"	"	"	23							"				4.0 V			"	5A		"	"
"	"	"	24							"						4.0 V	"	6A		"	"
"	I_{IL}	3009	25	0.4 V						"							"	1A	-0.6	-1.50	mA
"	"	"	26			0.4 V				"							"	2A	"	"	"
"	"	"	27					0.4 V		"							"	3A	"	"	"
"	"	"	28							"		0.4 V					"	4A	"	"	"
"	"	"	29							"				0.4 V			"	5A	"	"	"
"	"	"	30							"						0.4 V	"	6A	"	"	"
"	I_{CEX}			1.1 V	4.5 V					"							4.5 V	1Y		50	µA
"	"		32			1.1 V	4.5 V			"							"	2Y		"	"
"	"		33					1.1 V	4.5 V	"							"	3Y		"	"
"	"		34							"	4.5 V	1.1 V					"	4Y		"	"
"	"	31	35							"			4.5 V	1.1 V			"	5Y		"	"
"	"		36							"					4.5 V	1.1 V	"	6Y		"	"
"	I_{CCL}	3005	37							"							5.0 V	V_{CC}		19.5	mA
"	I_{CCH1}	"	38	GND		GND				"		GND		GND		GND	5.0 V	V_{CC}		8.82	mA
	I_{CCH2}	"	39	GND		GND				"		GND		GND		GND	8.0 V	V_{CC}		16.5	mA
2	V_{OL}	3007	40	1.7 V	12 mA					"							4.5 V	1Y		0.45	V
T_C = 125°C	"	"	41			1.7 V	12 mA GND			"							"	2Y		"	"
"	"	"	42				GND	1.7 V	12 mA	"							"	3Y		"	"
"	"	"	43							"	12 mA	1.7 V					"	4Y		"	"
"	"	"	44							"			12 mA	1.7 V			"	5Y		"	"
"	"	"	45							"					12 mA	1.7 V	"	6Y		"	"
"	V_{OH}	3006	46	0.8 V	-0.12 mA					"							"	1Y	2.85		
"	"	"	47			0.8 V	-0.12 mA			"							"	2Y	"		"
"	"	"	48					0.8 V	-0.12 mA	"							"	3Y	"	"	"
"	"	"	49							"	-0.12 mA	0.8 V					"	4Y	"		"
"	"	"	50							"			-0.12 mA	0.8 V			"	5Y	"		"
"	"	"	51							"					-0.12 mA	0.8 V	"	6Y	"		"

See footnote at end of table.

TABLE III. Group A inspection for device type 03 – Continued.

Subgroup	Symbol	MIL-STD-883 method	Cases A,B,C,D Test No.	1 1A	2 1Y	3 2A	4 2Y	5 3A	6 3Y	7 GND	8 4Y	9 4A	10 5Y	11 5A	12 6Y	13 6A	14 V_{CC}	Meas. terminal	Test limits Min	Max	Unit
2	I_{OS}	3011	52	GND	GND					GND							5.5 V	1Y	-.59	-1.3	mA
T_C = 125°C	"	"	53			GND	GND			"							"	2Y	"	"	"
"	"	"	54					GND	GND	"							"	3Y	"	"	"
"	"	"	55							"	GND	GND					"	4Y	"	"	"
"	"	"	56							"			GND	GND			"	5Y	"	"	"
"	"	"	57							"					GND	GND	"	6Y	"	"	"
"	I_{IH}	3010	58	4.0 V						"							"	1A		5	µA
"	"	"	59			4.0 V				"							"	2A		"	"
"	"	"	60					4.0 V		"							"	3A		"	"
"	"	"	61							"		4.0 V					"	4A		"	"
"	"	"	62							"				4.0 V			"	5A		"	"
"	"	"	63							"						4.0 V	"	6A		"	"
"	I_{IL}	3009	64	0.4 V						"							"	1A	-0.6	-1.50	mA
"	"	"	65			0.4 V				"							"	2A	"	"	"
"	"	"	66					0.4 V		"							"	3A	"	"	"
"	"	"	67							"		0.4 V					"	4A	"	"	"
"	"	"	68							"				0.4 V			"	5A	"	"	"
"	"	"	69							"						0.4 V	"	6A	"	"	"
"	I_{CEX}		70	0.8 V	4.5 V					"							4.5 V	1Y		100	µA
"	"		71			0.8 V	4.5 V			"							"	2Y		"	"
"	"		72					0.8 V	4.5 V	"							"	3Y		"	"
"	"		73							"	4.5 V	0.8 V					"	4Y		"	"
"	"		74							"			4.5 V	0.8 V			"	5Y		"	"
"	"		75							"					4.5 V	0.8 V	"	6Y		"	"
"	I_{CCL}	3005	76							"							5.0 V	V_{CC}		19.5	mA
"	I_{CCH1}	"	77	GND		GND				"		GND		GND		GND	5.0 V	V_{CC}		8.82	mA
"	I_{CCH2}	"	78	GND		GND				"		GND		GND		GND	8.0 V	V_{CC}		16.5	mA
3	V_{OL}	3007	79	2.1 V	12 mA					"							4.5 V	1Y		0.4	V
T_C = -55°C	"	"	80			2.1 V	12 mA GND			"							"	2Y		"	"
"	"	"	81				GND	2.1 V	12 mA	"							"	3Y		"	"
"	"	"	82							"	12 mA	2.1 V					"	4Y		"	"
"	"	"	83							"			12 mA	2.1 V			"	5Y		"	"
"	"	"	84							"					12 mA	2.1 V	"	6Y		"	"
"	V_{OH}	3006	85	1.4 V	-0.12 mA					"							"	1Y	3.3		
"	"	"	86			1.4 V	-0.12 mA			"							"	2Y	"		"
"	"	"	87					1.4 V	-0.12 mA	"							"	3Y	"	"	"
"	"	"	88							"	-0.12 mA	1.4 V					"	4Y	"		"
"	"	"	89							"			-0.12 mA	1.4 V			"	5Y	"		"
"	"	"	90							"					-0.12 mA	1.4 V	"	6Y	"		"
"	I_{OS}	3011	91	GND	GND					"							5.5 V	1Y	-.67	-1.34	mA
"	"	"	92			GND	GND			"							"	2Y	"	"	"
"	"	"	93					GND	GND	"							"	3Y	"	"	"
"	"	"	94							"	GND	GND					"	4Y	"	"	"
"	"	"	95							"			GND	GND			"	5Y	"	"	"
"	"	"	96							"					GND	GND	"	6Y	"	"	"
"	I_{IH}	3010	97	4.0 V						"							"	1A		2.0	µA
"	"	"	98			4.0 V				"							"	2A		"	"
"	"	"	99					4.0 V		"							"	3A		"	"
"	"	"	100							"		4.0 V					"	4A		"	"
"	"	"	101							"				4.0 V			"	5A		"	"
"	"	"	102							"						4.0 V	"	6A		"	"

See footnote at end of table.

TABLE III. Group A inspection for device type 03 – Continued.

Subgroup	Symbol	MIL-STD-883 method	Cases A,B,C,D Test No.	1 1A	2 1Y	3 2A	4 2Y	5 3A	6 3Y	7 GND	8 4Y	9 4A	10 5Y	11 5A	12 6Y	13 6A	14 V_{CC}	Meas. terminal	Test limits Min	Max	Unit
3	I_{IL}	3009	103	0.4 V						GND							5.5 V	1A	-0.6	-1.50	mA
T_C = -55°C	"	"	104			0.4 V				"							"	2A	"	"	"
"	"	"	105					0.4 V		"							"	3A	"	"	"
"	"	"	106							"		0.4 V					"	4A	"	"	"
"	"	"	107							"				0.4 V			"	5A	"	"	"
"	"	"	108							"						0.4 V	"	6A	"	"	"
"	I_{CEX}			1.4 V	4.5 V					"							4.5 V	1Y		50	µA
"	"		110			1.4 V	4.5 V			"							"	2Y		"	"
"	"		111					1.4 V	4.5 V	"							"	3Y		"	"
"	"		112							"	4.5 V	1.4 V					"	4Y		"	"
"	"	109	113							"			4.5 V	1.4 V			"	5Y		"	"
"	"		114							"					4.5 V	1.4 V	"	6Y		"	"
"	I_{CCL}	3005	115							"							5.0 V	V_{CC}		19.5	mA
"	I_{CCH1}	"	116	GND		GND		GND		"		GND		GND		GND	5.0 V	V_{CC}		8.82	mA
"	I_{CCH2}	"	117	GND		GND		GND		"		GND		GND		GND	8.0 V	V_{CC}		16.5	mA
9	t_{PHL}	3003	118	IN	OUT					"							5.0 V	1A to 1Y	10	30	ns
T_C = 25°C	"	(Fig. 4)	119			IN	OUT			"							"	2A to 2Y	"	"	"
"	"	"	120					IN	OUT	"							"	3A to 3Y	"	"	"
"	"	"	121							"	OUT	IN					"	4A to 4Y	"	"	"
"	"	"	122							"			OUT	IN			"	5A to 5Y	"	"	"
"	"	"	123							"					OUT	IN	"	6A to 6Y	"	"	"
"	t_{PLH}	"	124	IN	OUT					"							"	1A to 1Y	25	80	"
"	"	"	125			IN	OUT			"							"	2A to 2Y	"	"	"
"	"	"	126					IN	OUT	"							"	3A to 3Y	"	"	"
"	"	"	127							"	OUT	IN					"	4A to 4Y	"	"	"
"	"	"	128							"			OUT	IN			"	5A to 5Y	"	"	"
"	"	"	129							"					OUT	IN	"	6A to 6Y	"	"	"
10	t_{PHL}	"	130	IN	OUT					"							"	1A to 1Y	10	35	"
T_C = 125°C	"	"	131			IN	OUT			"							"	2A to 2Y	"	"	"
"	"	"	132					IN	OUT	"							"	3A to 3Y	"	"	"
"	"	"	133							"	OUT	IN					"	4A to 4Y	"	"	"
"	"	"	134							"			OUT	IN			"	5A to 5Y	"	"	"
"	"	"	135							"					OUT	IN	"	6A to 6Y	"	"	"
"	t_{PLH}	"	136	IN	OUT					"							"	1A to 1Y	25	112	"
"	"	"	137			IN	OUT			"							"	2A to 2Y	"	"	"
"	"	"	138					IN	OUT	"							"	3A to 3Y	"	"	"
"	"	"	139							"	OUT	IN					"	4A to 4Y	"	"	"
"	"	"	140							"			OUT	IN			"	5A to 5Y	"	"	"
"	"	"	141							"					OUT	IN	"	6A to 6Y	"	"	"
11	t_{PHL}	3003	142	IN	OUT					"							"	1A to 1Y	10	40	"
T_C = -55°C	"	"	143			IN	OUT			"							"	2A to 2Y	"	"	"
"	"	"	144					IN	OUT	"							"	3A to 3Y	"	"	"
"	"	"	145							"	OUT	IN					"	4A to 4Y	"	"	"
"	"	"	146							"			OUT	IN			"	5A to 5Y	"	"	"
"	"	"	147							"					OUT	IN	"	6A to 6Y	"	"	"
"	t_{PLH}	"	148	IN	OUT					"							"	1A to 1Y	25	80	"
"	"	"	149			IN	OUT			"							"	2A to 2Y	"	"	"
"	"	"	150					IN	OUT	"							"	3A to 3Y	"	"	"
"	"	"	151							"	OUT	IN					"	4A to 4Y	"	"	"
"	"	"	152							"			OUT	IN			"	5A to 5Y	"	"	"
"	"	"	153							"					OUT	IN	"	6A to 6Y	"	"	"

1/ Pins not designated may be HIGH level logic, LOW level logic or open.

TABLE III. Group A inspection for device type 04. 1/

Subgroup	Symbol	MIL-STD-883 method	Cases A,B,C,D Test No.	1 1A	2 1B	3 1Y	4 2A	5 2B	6 2Y	7 GND	8 3Y	9 3A	10 3B	11 4Y	12 4A	13 4B	14 V_{CC}	Meas. terminal	Test limits Min	Max	Unit
1	V_{OL}	3007	1	1.9 V	1.9 V	12 mA				GND							4.5 V	1Y		0.4	V
T_C = 25°C	"	"	2				1.9 V	1.9 V	12 mA	"							"	2Y		"	"
"	"	"	3							"	12 mA	1.9 V	1.9 V				"	3Y		"	"
"	"	"	4							"				12 mA	1.9 V	1.9 V	"	4Y		"	"
"	V_{OH}	3006	5	1.1 V		-0.12 mA				"							"	1Y	3.4		
"	"	"	6		1.1 V	-0.12 mA				"							"	1Y	"		"
"	"	"	7				1.1 V		-0.12 mA	"							"	2Y	"	"	"
"	"	"	8					1.1 V	-0.12 mA	"							"	2Y	"		"
"	"	"	9							"	-0.12 mA	1.1 V					"	3Y	"		"
"	"	"	10							"	-0.12 mA		1.1 V				"	3Y	"		"
"	"	"	11							"				-0.12 mA	1.1 V		"	4Y	"		"
"	"	"	12							"				-0.12 mA		1.1 V	"	4Y	"		"
"	I_{OS}	3011	13	GND		GND				"							5.5 V	1Y	-0.67	-1.34	mA
"	"	"	14				GND		GND	"							"	2Y	"	"	"
"	"	"	15							"	GND	GND					"	3Y	"	"	"
"	"	"	16							"				GND	GND		"	4Y	"	"	"
"	I_{IH}	3010	17	4.0 V	GND					"							"	1A		2	µA
"	"	"	18	GND	4.0 V					"							"	1B		"	"
"	"	"	19				4.0 V	GND		"							"	2A		"	"
"	"	"	20				GND	4.0 V		"							"	2B		"	"
"	"	"	21							"		4.0 V	GND				"	3A		"	"
"	"	"	22							"		GND	4.0 V				"	3B		"	"
"	"	"	23							"					4.0 V	GND	"	4A		"	"
"	"	"	24							"					GND	4.0 V	"	4B		"	"
"	I_{IL}	3009	25	0.4 V	4.0 V					"							"	1A	-0.6	-1.50	mA
"	"	"	26	4.0 V	0.4 V					"							"	1B	"	"	"
"	"	"	27				0.4 V	4.0 V		"							"	2A	"	"	"
"	"	"	28				4.0 V	0.4 V		"							"	2B	"	"	"
"	"	"	29							"		0.4 V	4.0 V				"	3A	"	"	"
"	"	"	30							"		4.0 V	0.4 V				"	3B	"	"	"
"	"	"	31							"					0.4 V	4.0 V	"	4A	"	"	"
"	"	"	32							"					4.0 V	0.4 V	"	4B	"	"	"
"	I_{CEX}			1.1 V		4.5 V				"							4.5 V	1Y		50	µA
"	"		34				1.1 V		4.5 V	"							"	2Y		"	"
"	"		35							"	4.5 V	1.1 V					"	3Y		"	"
"	"		36							"				4.5 V	1.1 V		"	4Y		"	"
"	I_{CCL}	3005 33	37							"							5.0 V	V_{CC}		13	mA
"	I_{CCH1}	"	38	GND			GND					GND			GND		5.0 V	V_{CC}		5.88	mA
	I_{CCH2}	"	39	GND			GND					GND			GND		8.0 V	V_{CC}		11	mA
2	V_{OL}	3007	40	1.7 V	1.7 V	12 mA				"							4.5 V	1Y		0.45	V
T_C = 125°C	"	"	41				1.7 V	1.7 V	12 mA	"							"	2Y		"	"
"	"	"	42						"	"	12 mA	1.7 V	1.7 V				"	3Y		"	"
"	"	"	43						"	"				12 mA	1.7 V	1.7 V	"	4Y		"	"
"	V_{OH}	3006	44	0.7 V		-0.12 mA				"							"	1Y	2.85		
"	"	"	45		0.7 V	-0.12 mA				"							"	1Y	"		"
"	"	"	46				0.7 V		-0.12 mA	"							"	2Y	"	"	"
"	"	"	47					0.7 V	-0.12 mA	"							"	2Y	"		"
"	"	"	48							"	-0.12 mA	0.7 V					"	3Y	"		"
"	"	"	49							"	-0.12 mA		0.7 V				"	3Y	"		"
"	"	"	50							"				-0.12 mA	0.7 V		"	4Y	"		"
"	"	"	51							"				-0.12 mA		0.7 V	"	4Y	"		"

See footnote at end of table.

TABLE III. Group A inspection for device type 04 – Continued.

Subgroup	Symbol	MIL-STD-883 method	Cases A,B,C,D Test No.	1 1A	2 1B	3 1Y	4 2A	5 2B	6 2Y	7 GND	8 3Y	9 3A	10 3B	11 4Y	12 4A	13 4B	14 V_{CC}	Meas. terminal	Test limits Min	Max	Unit
2	I_{OS}	3011	52	GND		GND				GND							5.5 V	1Y	-.59	-1.3	mA
T_C = 125°C	“	“	53				GND		GND	“							“	2Y	“	“	“
“	“	“	54							“	GND	GND					“	3Y	“	“	“
“	“	“	55							“				GND	GND		“	4Y	“	“	“
“	I_{IH}	3010	56	4.0 V	GND					“							“	1A		5	µA
“	“	“	57	GND	4.0 V					“							“	1B		“	“
“	“	“	58				4.0 V	GND		“							“	2A		“	“
“	“	“	59				GND	4.0 V		“							“	2B		“	“
“	“	“	60							“		4.0 V	GND				“	3A		“	“
“	“	“	61							“		GND	4.0 V				“	3B		“	“
“	“	“	62							“					4.0 V	GND	“	4A		“	“
“	“	“	63							“					GND	4.0 V	“	4B		“	“
“	I_{IL}	3009	64	0.4 V	4.0 V					“							“	1A	-0.6	-1.50	mA
“	“	“	65	4.0 V	0.4 V					“							“	1B	“	“	“
“	“	“	66				0.4 V	4.0 V		“							“	2A	“	“	“
“	“	“	67				4.0 V	0.4 V		“							“	2B	“	“	“
“	“	“	68							“		0.4 V	4.0 V				“	3A	“	“	“
“	“	“	69							“		4.0 V	0.4 V				“	3B	“	“	“
“	“	“	70							“					0.4 V	4.0 V	“	4A	“	“	“
“	“	“	71							“					4.0 V	0.4 V	“	4B	“	“	“
“	I_{CEX}			0.7 V		4.5 V				“							4.5 V	1Y		100	µA
“	“		73				0.7 V		4.5 V	“							“	2Y		“	“
“	“		74							“	4.5 V	0.7 V					“	3Y		“	“
“	“		75							“				4.5 V	0.7 V		“	4Y		“	“
“	I_{CCL}	3005	76							“							5.0 V	V_{CC}		13	mA
“	I_{CCH1}	“	77	GND			GND			“		GND			GND		5.0 V	V_{CC}		5.88	mA
	I_{CCH2}	“	78	GND			GND			“		GND			GND		8.0 V	V_{CC}		11	mA
3	V_{OL}	3007	79	2.1 V	2.1 V	12 mA				“							4.5 V	1Y		0.4	V
T_C = -55°C	“	“	80				2.1 V	2.1 V	12 mA	“							“	2Y		“	“
“	“	“	81							“	12 mA	2.1 V	2.1 V				“	3Y		“	“
“	“	“	82							“				12 mA	2.1 V	2.1 V	“	4Y		“	“
“	V_{OH}	3006	83	1.4 V		-0.12 mA				“							“	1Y	3.3		
“	“	“	84		1.4 V	-0.12 mA				“							“	1Y	“		“
“	“	“	85				1.4 V		-0.12 mA	“							“	2Y	“	“	“
“	“	“	86					1.4 V	-0.12 mA	“							“	2Y	“		“
“	“	“	87							“	-0.12 mA	1.4 V					“	3Y	“		“
“	“	“	88							“	-0.12 mA		1.4 V				“	3Y	“		“
“	“	“	89							“				-0.12 mA	1.4 V		“	4Y	“		“
“	“	“	90							“				-0.12 mA		1.4 V	“	4Y	“		“
“	I_{OS}	3011	91	GND		GND				“							5.5 V	1Y	-0.67	-1.34	mA
“	“	“	92				GND		GND	“							“	2Y	“	“	“
“	“	“	93							“	GND	GND					“	3Y	“	“	“
“	“	“	94							“				GND	GND		“	4Y	“	“	“
“	I_{IH}	3010	95	4.0 V	GND					“							“	1A		2.0	µA
“	“	“	96	GND	4.0 V					“							“	1B		“	“
“	“	“	97				4.0 V	GND		“							“	2A		“	“
“	“	“	98				GND	4.0 V		“							“	2B		“	“
“	“	“	99							“		4.0 V	GND				“	3A		“	“
“	“	“	100							“		GND	4.0 V				“	3B		“	“
“	“	“	101							“					4.0 V	GND	“	4A		“	“
“	“	“	102							“					GND	4.0 V	“	4B		“	“

See footnote at end of table.

TABLE III. Group A inspection for device type 04 – Continued.

Subgroup	Symbol	MIL-STD-883 method	Cases A,B,C,D Test No.	1 1A	2 1B	3 1Y	4 2A	5 2B	6 2Y	7 GND	8 3Y	9 3A	10 3B	11 4Y	12 4A	13 4B	14 V_{CC}	Meas. terminal	Test limits Min	Max	Unit
3	I_{IL}	3009	103	0.4 V	4.0 V					GND							5.5 V	1A	-0.6	-1.50	mA
T_C = -55°C	"	"	104	4.0 V	0.4 V					"							"	1B	"	"	"
"	"	"	105				0.4 V	4.0 V		"							"	2A	"	"	"
"	"	"	106				4.0 V	0.4 V		"							"	2B	"	"	"
"	"	"	107							"		0.4 V	4.0 V				"	3A	"	"	"
"	"	"	108							"		4.0 V	0.4 V				"	3B	"	"	"
"	"	"	109							"					0.4 V	4.0 V	"	4A	"	"	"
"	"	"	110							"					4.0 V	0.4 V	"	4B	"	"	"
"	I_{CEX}			1.4 V		4.5 V				"							4.5 V	1Y		50	µA
"	"		112				1.4 V		4.5 V	"							"	2Y		"	"
"	"		113							"	4.5 V	1.4 V					"	3Y		"	"
"	"		114							"				4.5 V	1.4 V		"	4Y		"	"
"	I_{CCL}	3005 1/	115							"							5.0 V	V_{CC}		13	mA
"	I_{CCH1}	"	116	GND			GND			"		GND			GND		5.0 V	V_{CC}		5.88	mA
"	I_{CCH2}	"	117	GND			GND			"		GND			GND		8.0 V	V_{CC}		11	mA
9	t_{PHL}	3003	118	IN		OUT				"							5.0 V	1A to 1Y	10	30	ns
T_C = 25°C	"	(Fig. 4)	119				IN		OUT	"							"	2A to 2Y	"	"	"
"	"	"	120							"	OUT	IN					"	3A to 3Y	"	"	"
"	"	"	121							"				OUT	IN		"	4A to 4Y	"	"	"
"	t_{PLH}	"	122	IN		OUT				"							"	1A to 1Y	25	80	"
"	"	"	123				IN		OUT	"							"	2A to 2Y	"	"	"
"	"	"	124							"	OUT	IN					"	3A to 3Y	"	"	"
"	"	"	125							"				OUT	IN		"	4A to 4Y	"	"	"
10	t_{PHL}	"	126	IN		OUT				"							"	1A to 1Y	10	35	"
T_C = 125°C	"	"	127				IN		OUT	"							"	2A to 2Y	"	"	"
"	"	"	128							"	OUT	IN					"	3A to 3Y	"	"	"
"	"	"	129							"				OUT	IN		"	4A to 4Y	"	"	"
"	t_{PLH}	"	130	IN		OUT				"							"	1A to 1Y	25	112	"
"	"	"	131				IN		OUT	"							"	2A to 2Y	"	"	"
"	"	"	132							"	OUT	IN					"	3A to 3Y	"	"	"
"	"	"	133							"				OUT	IN		"	4A to 4Y	"	"	"
11	t_{PHL}	"	134	IN		OUT				"							"	1A to 1Y	10	40	"
T_C = -55°C	"	"	135				IN		OUT	"							"	2A to 2Y	"	"	"
"	"	"	136							"	OUT	IN					"	3A to 3Y	"	"	"
"	"	"	137							"				OUT	IN		"	4A to 4Y	"	"	"
"	t_{PLH}	"	138	IN		OUT				"							"	1A to 1Y	20	80	"
"	"	"	139				IN		OUT	"							"	2A to 2Y	"	"	"
"	"	"	140							"	OUT	IN					"	3A to 3Y	"	"	"
"	"	"	141							"				OUT	IN		"	4A to 4Y	"	"	"

1/ Pins not designated may be HIGH level logic, LOW level logic or open.

TABLE III. Group A inspection for device type 05. 1/

Subgroup	Symbol	MIL-STD-883 method	Cases A,B,C,D Test No.	1 1A	2 1B	3 2A	4 2B	5 2C	6 2Y	7 GND	8 3Y	9 3A	10 3B	11 3C	12 1Y	13 1C	14 V_{CC}	Meas. terminal	Test limits Min	Max	Unit
1	V_{OL}	3007	1	1.9 V	1.9 V					GND					12 mA	1.9 V	4.5 V	1Y		0.4	V
$T_C = 25°C$	"	"	2			1.9 V	1.9 V	1.9 V	12 mA	"							"	2Y		"	"
"	"	"	3							"	12 mA	1.9 V	1.9 V	1.9 V			"	3Y		"	"
"	V_{OH}	3006	4	1.1 V						"					-0.12 mA		"	1Y	3.4		
"	"	"	5		1.1 V					"					"		"	1Y	"		"
"	"	"	6			1.1 V			-0.12 mA	"					"	1.1 V	"	1Y	"	"	"
"	"	"	7				1.1 V		"	"							"	2Y	"	"	"
"	"	"	8					1.1 V	"	"							"	2Y	"		"
"	"	"	9							"							"	2Y	"		"
"	"	"	10							"	-0.12 mA	1.1 V					"	3Y	"		"
"	"	"	11							"	"		1.1 V				"	3Y	"		"
"	"	"	12							"	"			1.1 V			"	3Y	"		"
"	I_{OS}	3011	13							"					GND	GND	5.5 V	1Y	-0.67	-1.34	mA
"	"	"	14					GND	GND	"							"	2Y	"	"	"
"	"	"	15							"	GND			GND			"	3Y	"	"	"
"	I_{IH}	3010	16	4.0 V	GND					"						GND	"	1A		2.0	µA
"	"	"	17	GND	4.0 V					"						GND	"	1B		"	"
"	"	"	18	GND	GND					"						4.0 V	"	1C		"	"
"	"	"	19			4.0 V	GND	GND		"							"	2A		"	"
"	"	"	20			GND	4.0 V	GND		"							"	2B		"	"
"	"	"	21			GND	GND	4.0 V		"							"	2C		"	"
"	"	"	22							"		4.0 V	GND	GND			"	3A		"	"
"	"	"	23							"		GND	4.0 V	GND			"	3B		"	"
"	"	"	24							"		GND	GND	4.0 V			"	3C		"	"
"	I_{IL}	3009	25	0.4 V	4.0 V					"						4.0 V	"	1A	-0.6	-1.50	mA
"	"	"	26	4.0 V	0.4 V					"						4.0 V	"	1B	"	"	"
"	"	"	27	4.0 V	4.0 V					"						0.4 V	"	1C	"	"	"
"	"	"	28			0.4 V	4.0 V	4.0 V		"							"	2A	"	"	"
"	"	"	29			4.0 V	0.4 V	4.0 V		"							"	2B	"	"	"
"	"	"	30			4.0 V	4.0 V	0.4 V		"							"	2C	"	"	"
"	"	"	31							"		0.4 V	4.0 V	4.0 V			"	3A	"	"	"
"	"	"	32							"		4.0 V	0.4 V	4.0 V			"	3B	"	"	"
"	"	"	33							"		4.0 V	4.0 V	0.4 V			"	3C	"	"	"
"	I_{CEX}			1.1 V						"					4.5 V		4.5 V	1Y		50	µA
"	"		35			1.1 V			4.5 V	"							"	2Y		"	"
"	"		36							"	4.5 V	1.1 V					"	3Y		"	"
"	I_{CCL}	3005	37							"							5.0 V	V_{CC}		9.75	mA
"	I_{CCH1}	" 34	38	GND		GND						GND					5.0 V	V_{CC}		4.41	mA
	I_{CCH2}	"	39	GND		GND						GND					8.0 V	V_{CC}		8.25	mA
2	V_{OL}	3007	40	1.7 V	1.7 V					"					12 mA	1.7 V	4.5 V	1Y		0.45	V
$T_C = 125°C$	"	"	41			1.7 V	1.7 V	1.7 V	12 mA	"							"	2Y		"	"
"	"	"	42						"	"	12 mA	1.7 V	1.7 V	1.7 V			"	3Y		"	"
"	V_{OH}	3006	43	0.8 V					"	"					-0.12 mA		"	1Y	2.85		
"	"	"	44		0.8 V					"					"		"	1Y	"		"
"	"	"	45			0.8 V			-0.12 mA	"					"	0.8 V	"	1Y	"	"	"
"	"	"	46				0.8 V		"	"							"	2Y	"		"
"	"	"	47					0.8 V	"	"							"	2Y	"		"
"	"	"	48							"							"	2Y	"		"
"	"	"	49							"	-0.12 mA	0.8 V					"	3Y	"		"
"	"	"	50							"	"		0.8 V				"	3Y	"		"
"	"	"	51							"	"			0.8 V			"	3Y	"		"

See footnote at end of table.

TABLE III. Group A inspection for device type 05 – Continued.

Subgroup	Symbol	MIL-STD-883 method	Cases A,B,C,D Test No.	1 1A	2 1B	3 2A	4 2B	5 2C	6 2Y	7 GND	8 3Y	9 3A	10 3B	11 3C	12 1Y	13 1C	14 V_{CC}	Meas. terminal	Test limits Min	Max	Unit
2	I_{OS}	3011	52							GND					GND	GND	5.5 V	1Y	-.59	-1.3	mA
T_C = 125°C	"	"	53					GND	GND	"							"	2Y	"	"	"
"	"	"	54							"	GND			GND			"	3Y	"	"	"
"	I_{IH}	3010	55	4.0 V	GND					"						GND	"	1A		5	µA
"	"	"	56	GND	4.0 V					"						GND	"	1B		"	"
"	"	"	57	GND	GND					"						4.0 V	"	1C		"	"
"	"	"	58			4.0 V	GND	GND		"							"	2A		"	"
"	"	"	59			GND	4.0 V	GND		"							"	2B		"	"
"	"	"	60			GND	GND	4.0 V		"							"	2C		"	"
"	"	"	61							"		4.0 V	GND	GND			"	3A		"	"
"	"	"	62							"		GND	4.0 V	GND			"	3B		"	"
"	"	"	63							"		GND	GND	4.0 V			"	3C		"	"
"	I_{IL}	3009	64	0.4 V	4.0 V					"						4.0 V	"	1A	-0.6	-1.50	mA
"	"	"	65	4.0 V	0.4 V					"						4.0 V	"	1B	"	"	"
"	"	"	66	4.0 V	4.0 V					"						0.4 V	"	1C	"	"	"
"	"	"	67			0.4 V	4.0 V	4.0 V		"							"	2A	"	"	"
"	"	"	68			4.0 V	0.4 V	4.0 V		"							"	2B	"	"	"
"	"	"	69			4.0 V	4.0 V	0.4 V		"							"	2C	"	"	"
"	"	"	70							"		0.4 V	4.0 V	4.0 V			"	3A	"	"	"
"	"	"	71							"		4.0 V	0.4 V	4.0 V			"	3B	"	"	"
"	"	"	72							"		4.0 V	4.0 V	0.4 V			"	3C	"	"	"
"	I_{CEX}			0.8 V						"					4.5 V		4.5 V	1Y		100	µA
"	"		74			0.8 V			4.5 V	"							"	2Y		"	"
"	"		75							"	4.5 V	0.8 V					"	3Y		"	"
"	I_{CCL}	3005	76							"							5.0 V	V_{CC}		9.75	mA
"	I_{CCH1}	"73	77	GND		GND						GND					5.0 V	V_{CC}		4.41	mA
	I_{CCH2}	"	78	GND		GND						GND					8.0 V	V_{CC}		8.25	mA
3	V_{OL}	3007	79	2.1 V	2.1 V					"					12 mA	2.1 V	4.5 V	1Y		0.4	V
T_C = -55°C	"	"	80			2.1 V	2.1 V	2.1 V	12 mA	"							"	2Y		"	"
"	"	"	81						"	"	12 mA	2.1 V	2.1 V	2.1 V			"	3Y		"	"
"	V_{OH}	3006	82	1.4 V					"	"					-0.12 mA		"	1Y	3.3		
"	"	"	83		1.4 V					"					"		"	1Y	"		"
"	"	"	84			1.4 V			-0.12 mA	"					"	1.4 V	"	1Y	"	"	"
"	"	"	85				1.4 V		"	"							"	2Y	"		"
"	"	"	86					1.4 V	"	"							"	2Y	"		"
"	"	"	87							"							"	2Y	"		"
"	"	"	88							"	-0.12 mA	1.4 V					"	3Y	"		"
"	"	"	89							"	"		1.4 V				"	3Y	"		"
"	"	"	90							"	"			1.4 V			"	3Y	"		"
"	I_{OS}	3011	91							"					GND	GND	5.5 V	1Y	-0.67	-1.34	mA
"	"	"	92					GND	GND	"							"	2Y	"	"	"
"	"	"	93							"	GND			GND			"	3Y	"	"	"
"	I_{IH}	3010	94	4.0 V	GND					"						GND	"	1A		2.0	µA
"	"	"	95	GND	4.0 V					"						GND	"	1B		"	"
"	"	"	96	GND	GND					"						4.0 V	"	1C		"	"
"	"	"	97			4.0 V	GND	GND		"							"	2A		"	"
"	"	"	98			GND	4.0 V	GND		"							"	2B		"	"
"	"	"	99			GND	GND	4.0 V		"							"	2C		"	"
"	"	"	100							"		4.0 V	GND	GND			"	3A		"	"
"	"	"	101							"		GND	4.0 V	GND			"	3B		"	"
"	"	"	102							"		GND	GND	4.0 V			"	3C		"	"

See footnote at end of table.

TABLE III. Group A inspection for device type 05 – Continued.

Subgroup	Symbol	MIL-STD-883 method	Cases A,B,C,D Test No.	1 1A	2 1B	3 2A	4 2B	5 2C	6 2Y	7 GND	8 3Y	9 3A	10 3B	11 3C	12 1Y	13 1C	14 V_{CC}	Meas. terminal	Test limits Min	Max	Unit
3	I_{IL}	3009	103	0.4 V	4.0 V					GND						4.0 V	5.5 V	1A	-0.6	-1.50	mA
T_C = -55°C	"	"	104	4.0 V	0.4 V					"						4.0 V	"	1B	"	"	"
"	"	"	105	4.0 V	4.0 V					"						0.4 V	"	1C	"	"	"
"	"	"	106			0.4 V	4.0 V	4.0 V		"							"	2A	"	"	"
"	"	"	107			4.0 V	0.4 V	4.0 V		"							"	2B	"	"	"
"	"	"	108			4.0 V	4.0 V	0.4 V		"							"	2C	"	"	"
"	"	"	109							"		0.4 V	4.0 V	4.0 V			"	3A	"	"	"
"	"	"	110							"		4.0 V	0.4 V	4.0 V			"	3B	"	"	"
"	"	"	111							"		4.0 V	4.0 V	0.4 V			"	3C	"	"	"
"	I_{CEX}			1.4 V						"					4.5 V		4.5 V	1Y		50	µA
"	"		113			1.4 V			4.5 V	"							"	2Y		"	"
"	"		114							"	4.5 V	1.4 V					"	3Y		"	"
"	I_{CCL}	3005	115							"							5.0 V	V_{CC}		9.75	mA
"	I_{CCH1}	"112	116	GND		GND				"		GND					5.0 V	V_{CC}		4.41	mA
"	I_{CCH2}	"	117	GND		GND				"		GND					8.0 V	V_{CC}		8.25	mA
9	t_{PHL}	3003	118	IN						"					OUT		5.0 V	1A to 1Y	10	30	ns
T_C =25°C	"	(Fig. 4)	119			IN			OUT	"							"	2A to 2Y	"	"	"
"	"	"	120							"	OUT	IN					"	3A to 3Y	"	"	"
"	t_{PLH}	"	121	IN						"					OUT		"	1A to 1Y	25	80	"
"	"	"	122			IN			OUT	"							"	2A to 2Y	"	"	"
"	"	"	123							"	OUT	IN					"	3A to 3Y	"	"	"
10	t_{PHL}	"	124	IN						"					OUT		"	1A to 1Y	10	35	"
T_C =125°C	"	"	125			IN			OUT	"							"	2A to 2Y	"	"	"
"	"	"	126							"	OUT	IN					"	3A to 3Y	"	"	"
"	t_{PLH}	"	127	IN						"					OUT		"	1A to 1Y	25	112	"
"	"	"	128			IN			OUT	"							"	2A to 2Y	"	"	"
"	"	"	129							"	OUT	IN					"	3A to 3Y	"	"	"
11	t_{PHL}	"	130	IN						"					OUT		"	1A to 1Y	10	40	"
T_C = -55°C	"	"	131			IN			OUT	"							"	2A to 2Y	"	"	"
"	"	"	132							"	OUT	IN					"	3A to 3Y	"	"	"
"	t_{PLH}	"	133	IN						"					OUT		"	1A to 1Y	25	80	"
"	"	"	134			IN			OUT	"							"	2A to 2Y	"	"	"
"	"	"	135							"	OUT	IN					"	3A to 3Y	"	"	"

1/ Pins not designated may be HIGH level logic, LOW level logic or open.

5. PACKAGING

5.1 Packaging requirements. For acquisition purposes, the packaging requirements shall be as specified in the contract or order (see 6.2). When packaging of materiel is to be performed by DoD or in-house contractor personnel, these personnel need to contact the responsible packaging activity to ascertain packaging requirements. Packaging requirements are maintained by the Inventory Control Point's packaging activity within the Military Service or Defense Agency, or within the military service's system command. Packaging data retrieval is available from the managing Military Department's or Defense Agency's automated packaging files, CD-ROM products, or by contacting the responsible packaging activity.

6. NOTES

(This section contains information of a general or explanatory nature that may be helpful, but it is not mandatory)

6.1 Intended use. Microcircuits conforming to this specification are intended for logistic support of existing equipment.

6.2 Acquisition requirements. Acquisition documents should specify the following:

a. Title, number, and date of the specification.
b. PIN and compliance identifier, if applicable (see 1.2).
c. Requirements for delivery of one copy of the conformance inspection data pertinent to the device inspection lot to be supplied with each shipment by the device manufacturer, if applicable.
d. Requirements for certificate of compliance, if applicable.
e. Requirements for notification of change of product or process to contracting activity in addition to notification to the qualifying activity, if applicable.
f. Requirements for failure analysis (including required test condition of method 5003 of MIL-STD-883), corrective action, and reporting of results, if applicable.
g. Requirements for product assurance options.
h. Requirements for special carriers, lead lengths, or lead forming, if applicable. These requirements should not affect the part number. Unless otherwise specified, these requirements will not apply to direct purchase by or direct shipment to the Government.
i. Requirements for "JAN" marking.
j. Packaging requirements (see 5.1).

6.3 Qualification. With respect to products requiring qualification, awards will be made only for products which are, at the time of award of contract, qualified for inclusion in Qualified Manufacturers List QML-38535 whether or not such products have actually been so listed by that date. The attention of the contractors is called to these requirements, and manufacturers are urged to arrange to have the products that they propose to offer to the Federal Government tested for qualification in order that they may be eligible to be awarded contracts or purchase orders for the products covered by this specification. Information pertaining to qualification of products may be obtained from DSCC-VQ, 3990 E. Broad Street, Columbus, Ohio 43123-1199. An online listing of products qualified to this specification may be found in the Qualified Products Database (QPD) at http://assist.daps.dla.mil.

6.4 Superseding information. The requirements of MIL-M-38510 have been superseded to take advantage of the available Qualified Manufacturer Listing (QML) system provided by MIL-PRF-38535. Previous references to MIL-M-38510 in this document have been replaced by appropriate references to MIL-PRF-38535. All technical requirements now consist of this specification and MIL-PRF-38535. The MIL-M-38510 specification sheet number and PIN have been retained to avoid adversely impacting existing government logistics systems and contractor's parts lists.

6.5 Abbreviations, symbols, and definitions. The abbreviations, symbols, and definitions used herein are defined in MIL-PRF-38535, MIL-HDBK-1331, and as follows:

GND ..... Ground zero voltage potential
I_{CEX} ..... Collector cutoff currrent
V_{IN} ..... Voltage level at an input terminal

6.6 Logistic support. Lead materials and finishes (see 3.4) are interchangeable. Unless otherwise specified, microcircuits acquired for Government logistic support will be acquired to device class B (see 1.2.2), lead material and finish A (see 3.4). Longer length leads and lead forming should not affect the part number.

6.7 Substitutability. The cross-reference information below is presented for the convenience of users. Microcircuits covered by this specification will functionally replace the listed generic-industry type. Generic-industry microcircuit types may not have equivalent operational performance characteristics across military temperature ranges or reliability factors equivalent to MIL-M-35810 device types and may have slight physical variations in relation to case size. The presence of this information should not be deemed as permitting substitution of generic-industry types for MIL-M-38510 types or as a waiver of any of the provisions of MIL-PRF-38535.

Military device type	Generic-industry type
01	930
02	MIC935 and MC940
03	936
04	946
05	962

6.8 Changes from previous issue. The margins of this specification are marked with vertical lines to indicate where changes from the previous issue were made. This was done as a convenience only and the Government assumes no liability whatsoever for any inaccuracies in these notations. Bidders and contractors are cautioned to evaluate the requirements of this document based on the entire content irrespective of the marginal notations and relationship to the last previous issue.

Custodians:
Army - CR
Navy - EC
Air Force - 85
DLA - CC

Preparing activity:
DLA - CC

(Project 5962-2008-008)

Review activities:
Army - MI, SM
Navy - AS, CG, MC, SH, TD
Air Force - 03, 19, 99

NOTE: The activities listed above were interested in this document as of the date of this document. Since organizations and responsibilities can change, you should verify the currency of the information above using the ASSIST Online database at http://assist.daps.dla.mil.