MIL-M-38510/28C
4 October 2005__
SUPERSEDING
MIL-M-38510/28B(USAF)
2 August 1974
MIL-M-0038510/28A
15 October 1973

MILITARY SPECIFICATION

MICROCIRCUITS, DIGITAL, TTL, LOW POWER SHIFT REGISTERS, MONOLITHIC SILICON

Inactive for new design after 6 October 1995.

This specification is approved for use by all Departments and Agencies of the Department of Defense.

The requirements for acquiring the product herein shall consist of this specification sheet and MIL-PRF 38535

1. SCOPE

1.1 Scope. This specification covers the detail requirements for monolithic, silicon, TTL, low power shift register, microcircuits. Two product assurance classes and a choice of case outlines and lead finishes are provided for each type and are reflected in the complete part number. For this product, the requirements of MIL-M-38510 have been superseded by MIL-PRF-38535, (see 6.4).

1.2 Part or Identifying Number (PIN). The PIN is in accordance with MIL-PRF-38535, and as specified herein.

1.2.1 Device types. The device types are as follows:

Device type	Circuit
01	4-bit right shift, left shift register
02	8-bit parallel out, serial shift register
03	Dual 8-bit shift register
04	4-bit shift register
05	8-bit parallel out, serial shift register

1.2.2 Device class. The device class is the product assurance level as defined in MIL-PRF-38535.

1.2.3 Case outlines. The case outlines are as designated in MIL-STD-1835 and as follows:

Outline letter	Descriptive designator	Terminals	Package style
A	GDFP5-F14 or CDFP6-F14	14	Flat pack
B	GDFP4-F14	14	Flat pack
C	GDIP1-T14 or CDIP2-T14	14	Dual-in-line
D	GDFP1-F14 or CDFP2-F14	14	Flat pack
E	GDIP1-T16 or CDIP2-T16	16	Dual-in-line
F	GDFP2-F16 or CDFP3-F16	16	Flat-pack

Comments, suggestions, or questions on this document should be addressed to: Commander, Defense Supply Center Columbus, ATTN: DSCC-VAS, P. O. Box 3990, Columbus, OH 43218-3990, or emailed to bipolar@dscc.dla.mil. Since contact information can change, you may want to verify the currency of this address information using the ASSIST Online database at http://assist.daps.dla.mil.

1.3 Absolute maximum ratings.

Supply voltage range	
Device type 01	0 V dc to 8.0 V dc
Device type 02	0 V dc to 7.0 V dc
Device type 03	-0.5 V dc to 7.0 V dc
Device type 04	-0.5 V dc to 7.0 V dc
Device type 05	0 V dc to 7.0 V dc
Input voltage range	0 V dc to 6.0 V dc
Storage temperature range	-65°C to +150°C
Maximum power dissipation per register, (P_D)	
Device type 01	20 mW
Device type 02	120 mW
Device type 03	134 mW
Device type 04	124 mW
Device type 05	52 mW
Lead temperature (soldering 10 seconds)	300°C
Thermal resistance, junction-to-case (θ_{JC})	(See MIL-STD-1835)
Junction temperature (T_J)	175°C

1.4 Recommended operating conditions.

Supply voltage	4.5 V dc minimum to 5.5 V dc maximum
Minimum high level input voltage	2.0 V dc
Maximum low level input voltage	
Device type 01	0.7 V dc
Device type 02	0.8 V dc
Device type 03	0.7 V dc
Device type 04	0.7 V dc
Device type 05	0.7 V dc
Case operating temperature range (T_C)	-55°C to 125°C
Fanout	
Device type 01	
High logic level	0.1 mA
Low logic level	2.0 mA
Device type 02	
High logic level	0.2 mA
Low logic level	4.0 mA
Device type 03 and 04	
High logic level	0.32 mA
Low logic level	3.2 mA
Device type 05	
High logic level	0.2 mA
Low logic level	2.0 mA

2.0 APPLICABLE DOCUMENT

2.1 General. The documents listed in this section are specified in sections 3, 4, or 5 of this specification. This section does not include documents cited in other sections of this specification or recommended for additional information or as examples. While every effort has been made to ensure the completeness of this list, document users are cautioned that they must meet all specified requirements of documents cited in sections 3, 4, or 5 of this specification, whether or not they are listed.

2.2 Government documents.

2.2.1 Specifications and standards. The following specifications and standards form a part of this specification to the extent specified herein. Unless otherwise specified, the issues of these documents are those cited in the solicitation or contract.

DEPARTMENT OF DEFENSE SPECIFICATIONS

MIL-PRF-38535 - Integrated Circuits (Microcircuits) Manufacturing, General Specification for.

DEPARTMENT OF DEFENSE STANDARDS

MIL-STD-883 - Test Method Standard for Microelectronics.
MIL-STD-1835 - Interface Standard Electronic Component Case Outlines

(Copies of these documents are available online at http://assist.daps.dla.mil/quicksearch/ or http://assist.daps.dla.mil or from the Standardization Document Order Desk, 700 Robbins Avenue, Building 4D, Philadelphia, PA 19111-5094.)

2.3 Order of precedence. In the event of a conflict between the text of this specification and the references cited herein, the text of this document takes precedence. Nothing in this document, however, supersedes applicable laws and regulations unless a specific exemption has been obtained.

3. REQUIREMENTS

3.1 Qualification. Microcircuits furnished under this specification shall be products that are manufactured by a manufacturer authorized by the qualifying activity for listing on the applicable qualified manufacturers list before contract award (see 4.3 and 6.3).

3.2 Item requirements. The individual item requirements shall be in accordance with MIL-PRF-38535 and as specified herein or as modified in the device manufacturer's Quality Management (QM) plan. The modification in the QM plan shall not affect the form, fit, or function as described herein.

3.3 Design, construction, and physical dimensions. The design, construction, and physical dimensions shall be as specified in MIL-PRF-38535 and herein.

3.3.1 Terminal connections. The terminal connections shall be as specified on figure 1.

3.3.2 Logic diagrams. The logic diagrams shall be as specified on figure 2.

3.3.3 Truth tables and logic equations. The truth tables and logic equations shall be as specified on figure 3.

3.3.4 Schematic circuit. The schematic circuit shall be maintained by the manufacturer and made available to the qualifying activity and the preparing activity upon request.

3.3.5 Case outlines. Case outlines shall be as specified in 1.2.3.

3.4 Lead material and finish. Lead material and finish shall be in accordance with MIL-PRF-38535 (see 6.6).

3.5 Electrical performance characteristics. The electrical performance characteristics are as specified in table 1 and apply over the full recommended case operating temperature range, unless otherwise specified.

3.6 Electrical test requirements. The electrical test requirements for each device class shall be the subgroups specified in table II. The electrical tests for each subgroup are described in table III.

3.7 Marking. Marking shall be in accordance with MIL-PRF-38535.

3.8 Microcircuit group assignment. The devices covered by this specification shall be in microcircuit group number 19 (see MIL-PRF-38535, appendix A).

TABLE I. Electrical performance characteristics.

Test	Symbol	Conditions	Device type	Limits		Units
				Min	Max	
High level output voltage	V_{OH}	V_{CC} = 4.5 V, V_{IH} = 2.0 V, I_{OH} = -100 μA, V_{IL} = 0.7 V	01	2.4	---	V
		V_{CC} = 4.5 V, V_{IH} = 2.0 V, V_{IL} = 0.8 V, I_{OH} = -200 μA	02	2.4	---	V
		V_{CC} = 4.5 V, V_{IH} = 2.0 V, V_{IL} = 0.7 V, I_{OH} = -320 μA	03	2.4	---	V
		V_{CC} = 4.5 V, V_{IH} = 2.0 V, V_{IL} = 0.7 V, I_{OH} = -320 μA	04	2.4	---	V
		V_{CC} = 4.5 V, V_{IH} = 2.0 V, V_{IL} = 0.7 V, I_{OH} = -200 μA	05	2.4	---	V
Low level output voltage	V_{OL}	V_{CC} = 4.5 V, V_{IH} = 2.0 V, V_{IL} = 0.7 V, I_{OL} = 2 mA	01	---	0.3	V
		V_{CC} = 4.5 V, V_{IH} = 2.0 V, V_{IL} = 0.8 V, I_{OL} = 4 mA	02	---	0.4	V
		V_{CC} = 4.5 V, V_{IH} = 2.0 V, V_{IL} = 0.7 V, I_{OL} = 3.2 mA	03	---	0.3	V
		V_{CC} = 4.5 V, V_{IH} = 2.0 V, V_{IL} = 0.7 V, I_{OL} = 3.2 mA	04	---	0.3	V
		V_{CC} = 4.5 V, V_{IH} = 2.0 V, V_{IL} = 0.7 V, I_{OL} = 2 mA	05	---	0.3	V
High level input voltage	V_{IH}	V_{CC} = 4.5 V	All	2.0	---	V
Low level input voltage	V_{IL}	V_{CC} = 4.5 V	01, 03, 04, 05		0.7	V
		V_{CC} = 4.5 V	02		0.8	V
High level input current at any input except mode control	I_{IH1}	V_{CC} = 5.5 V, V_{IN} = 2.4 V	01	---	10	μA
	I_{IH2}	V_{CC} = 5.5 V, V_{IN} = 5.5 V	01	---	100	μA
High level input current at mode control	I_{IH3}	V_{CC} = 5.5 V, V_{IN} = 2.4 V	01	---	20	μA
	I_{IH4}	V_{CC} = 5.5 V, V_{IN} = 5.5 V	01	---	200	μA
High level input current	I_{IH1}	V_{CC} = 5.5 V, V_{IN} = 2.4 V	02	---	20	μA
	I_{IH2}	V_{CC} = 5.5 V, V_{IN} = 5.5 V	02		100	μA
High level input current at $\overline{MR}$, D_0, and D_1	I_{IH1}	V_{CC} = 5.5 V, V_{IN} = 2.4 V	03		20	μA
High level input current at CP	I_{IH2}	V_{CC} = 5.5 V, V_{IN} = 2.4 V	03		30	μA
High level input current at D_S	I_{IH3}	V_{CC} = 5.5 V, V_{IN} = 2.4 V	03		40	μA
High level input current at CP COMMON	I_{IH4}	V_{CC} = 5.5 V, V_{IN} = 2.4 V	03		60	μA
High level input current, all inputs	I_{IH5}	V_{CC} = 5.5 V, V_{IN} = 5.5 V	03		100	μA
High level input current at J, $\overline{K}$, $\overline{MR}$, P_0, P_1, P_2, P_3	I_{IH1}	V_{CC} = 5.5 V, V_{IN} = 2.4 V	04		20	μA
High level input current at CP	I_{IH2}	V_{CC} = 5.5 V, V_{IN} = 2.4 V	04		40	μA

TABLE I. Electrical performance characteristics – Continued

Test	Symbol	Conditions	Device type	Limits		Units
				Min	Max	
High level input current at $\overline{PE}$	I_{IH3}	V_{CC} = 5.5 V, V_{IN} = 2.4 V	04		46	µA
High level input current, all inputs	I_{IH4}	V_{CC} = 5.5 V, V_{IN} = 5.5 V	04		100	µA
High level input current, except clear	I_{IH1}	V_{CC} = 5.5 V, V_{IN} = 2.4 V	05		10	µA
High level input current, clear input	I_{IH2}	V_{CC} = 5.5 V, V_{IN} = 2.4 V	05		20	µA
High level input current, except clear	I_{IH3}	V_{CC} = 5.5 V, V_{IN} = 5.5 V	05		100	µA
High level input current, clear input	I_{IH4}	V_{CC} = 5.5 V, V_{IN} = 5.5 V	05		200	µA
Low level input current at any input except mode control	I_{IL1}	V_{CC} = 5.5 V, V_{IN} = 0.3 V	01	-0.06	-0.18	mA
Low level input current at mode control	I_{IL2}	V_{CC} = 5.5 V, V_{IN} = 0.3 V	01	-0.12	-0.36	mA
Low level input current	I_{IL}	V_{CC} = 5.5 V, V_{IN} = 0.4 V	02	-0.35	-0.8	mA
Low level input current at $\overline{MR}$, D_0 and D_1	I_{IL1}	V_{CC} = 5.5 V, V_{IN} = 0.3 V	03	-0.12	-0.4	mA
Low level input current at CP	I_{IL2}	V_{CC} = 5.5 V, V_{IN} = 0.3 V	03	-0.25	-0.6	mA
Low level input current at D_S	I_{IL3}	V_{CC} = 5.5 V, V_{IN} = 0.3 V	03	-0.24	-0.8	mA
Low level input current at CP COMMON	I_{IL4}	V_{CC} = 5.5 V, V_{IN} = 0.3 V	03	-0.36	-1.2	mA
Low level input current at J, $\overline{K}$, $\overline{MR}$, P_0, P_1, P_2, P_3	I_{IL1}	V_{CC} = 5.5 V, V_{IN} = 0.3 V	04	-0.12	-0.4	mA
Low level input current at CP	I_{IL2}	V_{CC} = 5.5 V, V_{IN} = 0.3 V	04	-0.35	-0.8	mA
Low level input current at $\overline{PE}$	I_{IL3}	V_{CC} = 5.5 V, V_{IN} = 0.3 V	04	-0.36	-0.92	mA
Low level input current, except clear	I_{IL1}	V_{CC} = 5.5 V, V_{IN} = 0.3 V	05	-0.06	-0.18	mA
Low level input current, clear input	I_{IL2}	V_{CC} = 5.5 V, V_{IN} = 0.3 V	05	-0.12	-0.36	mA
Short circuit output current	I_{OS}	V_{CC} = 5.5 V 1/, V_{IN} = 4.5 V	01	-3	-15	mA
		V_{CC} = 5.5 V 1/	02	-3	-20	mA
		V_{CC} = 5.5 V, V_{OUT} = 0 V 1/	03	-2.5	-25	mA
		V_{CC} = 5.5 V, V_{OUT} = 0 V 1/	04	-2.5	-25	mA
		V_{CC} = 5.5 V, V_{OUT} = 0 V 1/	05	-3	-15	mA
Supply current	I_{CC}	V_{CC} = 5.5 V, V_{IH} = 4.5 V, V_{IL} = 0 2/	01	---	9	mA
		V_{CC} = 5.5 V, V_{IH} = 4.5 V 2/	02	---	27	mA
		V_{CC} = 5.5 V 2/	03		25.3	mA
		V_{CC} = 5.5 V 2/	04		23	mA
		V_{CC} = 5.5 V 2/	05		9	mA

See footnotes at end of table.

TABLE I. Electrical performance characteristics – Continued

Test	Symbol	Conditions	Device type	Limits		Units
				Min	Max	
Maximum shift frequency	f_{MAX}	V_{CC} = 5 V, C_L = 50 pF, R_L = 4 kΩ (see figure 4)	01	3	---	MHz
Propagation delay time, low-to-high level from clock 1 or clock 2 to outputs	t_{PLH}				250	ns
Propagation delay time, high-to-low level from clock 1 or clock 2 to outputs	t_{PHL}				250	ns
Low level setup time at mode control with respect to clock 1 input	t_1			225	---	ns
High level setup time at mode control with respect to clock 2 input	t_2			200	---	ns
Low level setup time at mode control with respect to clock 2 input	t_3			0	---	ns
High level setup time at mode control with respect to clock 1 input	t_4			100	---	ns
Width of clock pulse	t_P	See figure 4	01	200	---	ns
Setup time required at serial A, B, C, D inputs	$t_{SETUP(H)}$ $t_{SETUP(L)}$	See figure 4	01	100 100	--- ---	ns ns
Hold time required at serial A, B, C, D inputs	$t_{HOLD(H)}$ $t_{HOLD(L)}$	See figure 4	01	0 0	--- ---	ns ns
Maximum clock frequency	f_{MAX}	V_{CC} = 5 V, C_L = 50 pF, R_L = 800 Ω (figure 5)	02	12	---	MHz
Propagation delay time, high-to-low level, clear input to Q outputs	t_{PHL1}			10	110	ns
Propagation delay time, high-to-low level, clock input to Q outputs	t_{PHL2}			10	100	ns
Propagation delay time, low-to-high level, clock input to Q outputs	t_{PLH2}			10	80	ns
Width of clock or clear pulse	t_P			40	---	ns
Data setup time	$t_{SETUP(H)}$ $t_{SETUP(L)}$			30 30	--- ---	ns ns
Data hold time	$t_{HOLD(H)}$ $t_{HOLD(L)}$			0 0		ns ns
Maximum clock frequency	f_{MAX}	V_{CC} = 5 V, C_L = 50 pF, R_L = 1600 Ω (figure 6)	03	6	---	MHz
Propagation delay time, low-to-high level, clock input to Q outputs	t_{PLH1}			11	55	ns
Propagation delay time, high-to-low level, clock input to Q outputs	t_{PHL1}			20	100	ns
Propagation delay, high-to-low level, $\overline{MR}$ to Q outputs	t_{PHL2}			30	125	ns

See footnotes at end of table.

TABLE I. Electrical performance characteristics – Continued

Test	Symbol	Conditions	Device type	Limits		Units
				Min	Max	
Width of clock pulse	t_{P1}	V_{CC} = 5 V, C_L = 50 pF, R_L = 1600 Ω (figure 6)	03	65	20	ns
Width of $\overline{MR}$ pulse with clock HIGH	t_{P2}			65	20	ns
Width of $\overline{MR}$ pulse with clock LOW	t_{P3}			75	20	ns
Shift Right frequency	f_{SR}	V_{CC} = 5 V, C_L = 50 pF, R_L = 1600 Ω (figure 7)	04	5	25	MHz
Propagation delay, low-to-high, clock to output	t_{PLH1}			14	100	ns
Propagation delay, high-to-low, clock to output	t_{PHL1}			20	100	ns
Propagation delay, high-to-low, $\overline{MR}$ to output (except $\overline{Q}3$)	t_{PHL2}			20	100	ns
Propagation delay, high-to-low, $\overline{MR}$ to $\overline{Q}3$	t_{PHL3}			25	120	ns
Clock pulse width	t_{P1}			20	55	ns
Master reset pulse width	t_{P2}			20	75	ns
Setup time, data to clock	t_{SETUP1}			25	60	ns
Setup time, $\overline{PE}$ to clock	t_{SETUP2}			25	70	ns
Hold time, data to clock	t_{HOLD1}			-40	0	ns
Hold time, $\overline{PE}$ to clock	t_{HOLD2}			-65	-20	ns
Recovery time, $\overline{MR}$ to clock	t_{REC}			20	60	ns
Maximum clock frequency	f_{MAX}	V_{CC} = 5 V, C_L = 50 pF, R_L = 3.9 kΩ (figure 8)	05	3	---	MHz
Propagation delay time, high-to-low level, clear input to Q outputs	t_{PHL1}				140	ns
Propagation delay time, high-to-low level, clock input to Q outputs	t_{PHL2}				135	ns
Propagation delay time, low-to-high level, clock input to Q outputs	t_{PLH2}				120	ns
Width of clock or clear pulse	t_P			60	---	ns
Data setup time	$t_{SETUP(H)}$ $t_{SETUP(L)}$			40 40	--- ---	ns ns
Data hold time	$t_{HOLD(H)}$ $t_{HOLD(L)}$			-20 -20	--- ---	ns ns

1/ Not more than one output should be shorted at a time.
2/ I_{CC} is measured in accordance with Table III requirements.

TABLE II. Electrical test requirements.

MIL-PRF-38535 Test requirement	Subgroups (see table III)	
	Class S Devices	Class B Devices
Interim electrical parameters	1	1
Final electrical test parameters	1*, 2, 3, 7, 8, 9, 10, 11	1*, 2, 3, 7, 9
Group A test requirements	1, 2, 3, 7, 8, 9, 10, 11	1, 2, 3, 7, 9
Group B electrical test parameters when using the method 5005 QCI option	1, 2, 3	N/A
Groups C end point electrical parameters	1, 2, 3	1, 2, 3
Additional electrical subgroups for Group C periodic inspections	N/A	10, 11
Group D end point electrical parameters	1, 2, 3	1, 2, 3

*PDA applies to subgroup 1.

4. VERIFICATION

4.1 Sampling and inspection. Sampling and inspection procedures shall be in accordance with MIL-PRF-38535 or as modified in the device manufacturer's Quality Management (QM) plan. The modification in the QM plan shall not effect the form, fit, or function as described herein.

4.2 Qualification inspection. Qualification inspection shall be in accordance with MIL-PRF-38535.

4.3 Screening. Screening shall be in accordance with MIL-PRF-38535 and shall be conducted on all devices prior to qualification and conformance inspection. The following additional criteria shall apply:

a. The burn-in test duration, test condition, and test temperature, or approved alternatives shall be as specified in the device manufacturer's QM plan in accordance with MIL-PRF-38535. The burn-in test circuit shall be maintained under document control by the device manufacturer's Technology Review Board (TRB) in accordance with MIL-PRF-38535 and shall be made available to the acquiring or preparing activity upon request. The test circuit shall specify the inputs, outputs, biases, and power dissipation, as applicable, in accordance with the intent specified in test method 1015 of MIL-STD-883.

b. Interim and final electrical test parameters shall be as specified in table II, except interim electrical parameters test prior to burn-in is optional at the discretion of the manufacturer.

c. Additional screening for space level product shall be as specified in MIL-PRF-38535.

4.4 Technology Conformance Inspection (TCI). Technology conformance inspection shall be in accordance with MIL-PRF-38535 and herein for groups A, B, C, and D inspections (see 4.4.1 through 4.4.4).

4.4.1 Group A inspection. Group A inspection shall be in accordance with table III of MIL-PRF-38535 and as follows:

a. Tests shall be as specified in table II herein.

b. Subgroups 4, 5, and 6 shall be omitted.

4.4.2 Group B inspection. Group B inspection shall be in accordance with table II of MIL-PRF-38535.

4.4.3 Group C inspection. Group C inspection shall be in accordance with table IV of MIL-PRF-38535 and as follows:

a. End point electrical parameters shall be as specified in table II herein.

b. Subgroups 3 and 4 shall be added to the group C inspection requirements for class B devices and shall consist of the tests, conditions, and limits specified for subgroups 10 and 11 of group A. The sample size series number shall be 5 (45 devices accept on 0).

c. The steady-state life test duration, test condition, and test temperature, or approved alternatives shall be as specified in the device manufacturer's QM plan in accordance with MIL-PRF-38535. The burn-in test circuit shall be maintained under document control by the device manufacturer's Technology Review Board (TRB) in accordance with MIL-PRF-38535 and shall be made available to the acquiring or preparing activity upon request. The test circuit shall specify the inputs, outputs, biases, and power dissipation, as applicable, in accordance with the intent specified in test method 1005 of MIL-STD-883.

4.4.4 Group D inspection. Group D inspection shall be in accordance with table V of MIL-PRF-38535. End-point electrical parameters shall be as specified in table II herein.

4.5 Methods of inspection. Methods of inspection shall be as specified in the appropriate tables and as follows:

4.5.1 Voltage and current. All voltages given are referenced to the microcircuit ground terminal. Currents given are conventional current and positive when flowing into the referenced terminal.

Terminal number	Device type 01	Device type 02	Device type 03	Device type 04	Device type 05	Device type 05
	Cases A, B, C, D	Cases A, B, C, D	Cases E and F	Cases E and F	Case C	Cases A, B, D
1	SERIAL INPUT	S_A	MASTER RESET $\overline{MR}$	MASTER RESET $\overline{MR}$	S_A	Q_F
2	B IN	S_B	$2\overline{Q}_7$	J	S_B	Q_G
3	C IN	Q_A	$2Q_7$	$\overline{K}$	Q_A	Q_H
4	V_{CC}	Q_B	2DS	P_0	Q_B	V_{CC}
5	D IN	Q_C	$2D_1$	P_1	Q_C	S_A
6	MODE CONTROL	Q_D	$2D_0$	P_2	Q_D	S_B
7	CLOCK 1 R-SHIFT	GND	2CP	P_3	GND	Q_A
8	CLOCK 2 L-SHIFT	CLOCK	GND	GND	CLOCK	Q_B
9	Q_D	CLEAR	CP COM	$\overline{PE}$	CLEAR	Q_C
10	Q_C	Q_E	1CP	CP	Q_E	Q_D
11	GND	Q_F	$1D_0$	$\overline{Q}_3$	Q_F	GND
12	Q_B	Q_G	$1D_1$	Q_3	Q_G	CLOCK
13	Q_A	Q_H	1DS	Q_2	Q_H	CLEAR
14	A IN	V_{CC}	$1Q_7$	Q_1	V_{CC}	Q_E
15			$1\overline{Q}_7$	Q_0		
16			V_{CC}	V_{CC}		

Figure 1. Terminal connections.

DEVICE TYPE 01

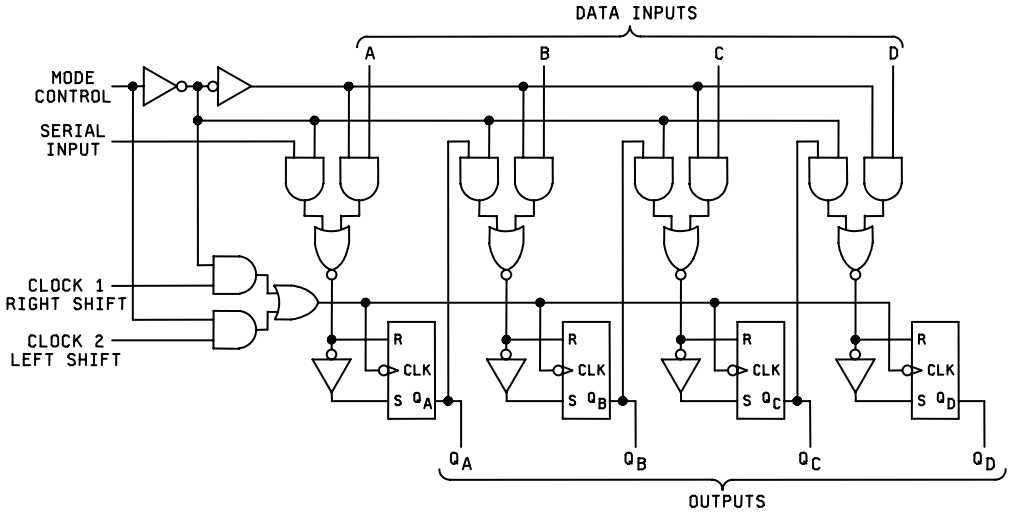

DEVICE TYPES 02 AND 05

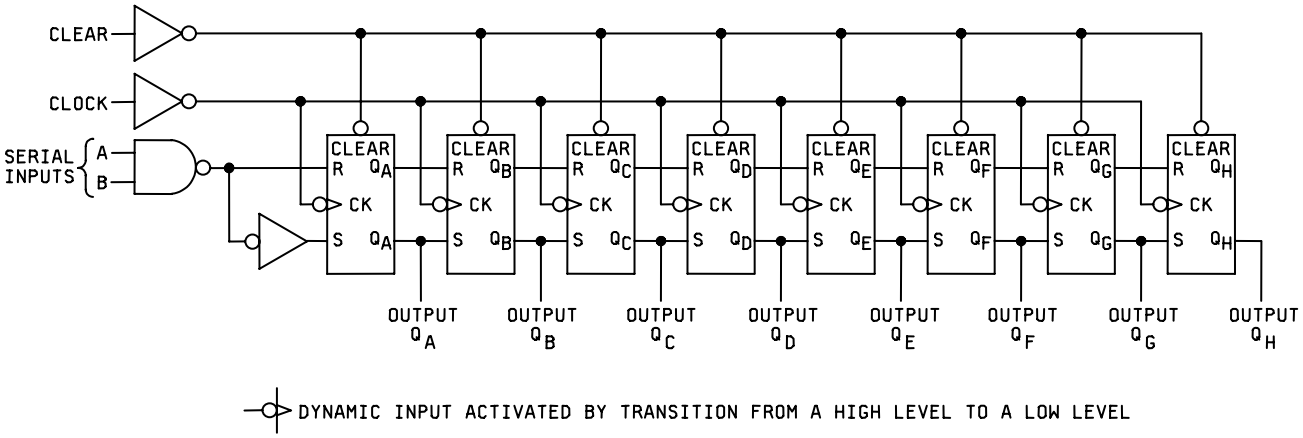

FIGURE 2. Logic diagram.

DEVICE TYPE 03

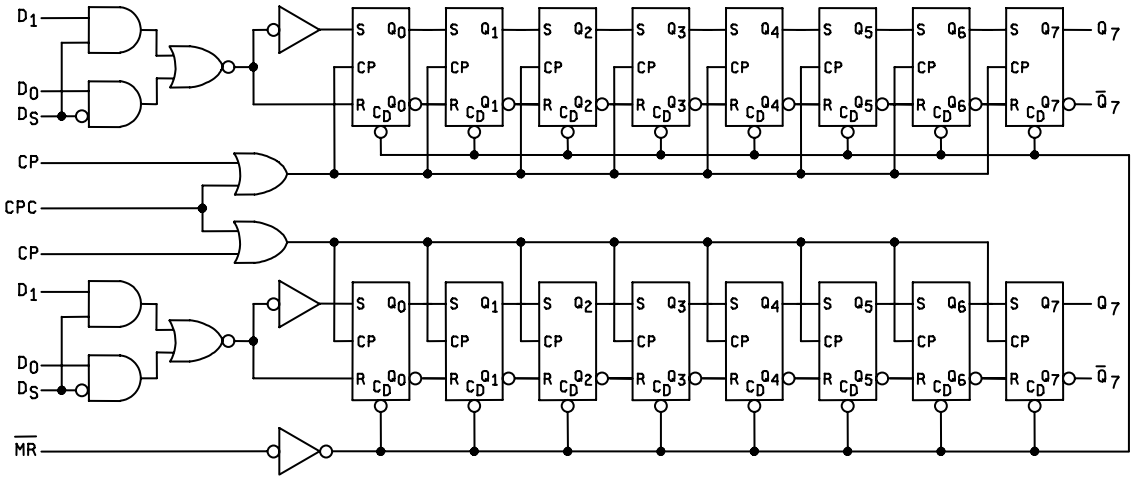

DEVICE TYPE 04

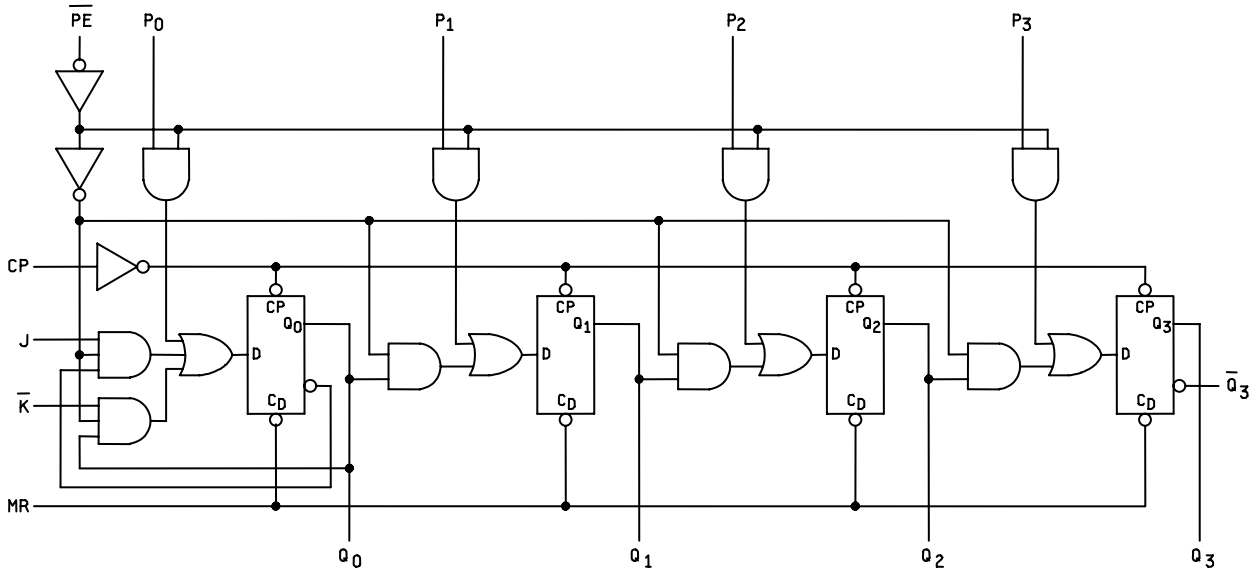

FIGURE 2. Logic diagram - Continued.

Device type 01

INPUTS								OUTPUTS			
MODE	CLOCKS			PARALLEL							
CONTROL	2(L)	1(R)	SERIAL	A	B	C	D	Q_A	Q_B	Q_C	Q_D
H	H	X	X	X	X	X	X	Q_{AO}	Q_{BO}	Q_{CO}	Q_{DO}
H	↓	X	X	a	b	c	d	a	b	c	d
H	↓	X	X	Q_B↑	Q_C↑	Q_D↑	d	Q_{Bn}	Q_{Cn}	Q_{Dn}	d
L	L	H	X	X	X	X	X	Q_{AO}	Q_{BO}	Q_{CO}	Q_{DO}
L	X	↓	H	X	X	X	X	H	Q_{An}	Q_{Bn}	Q_{Cn}
L	X	↓	L	X	X	X	X	L	Q_{An}	Q_{Bn}	Q_{Cn}
↑	L	L	X	X	X	X	X	Q_{AO}	Q_{BO}	Q_{CO}	Q_{DO}
↓	L	L	X	X	X	X	X	Q_{AO}	Q_{BO}	Q_{CO}	Q_{DO}
↓	L	H	X	X	X	X	X	Q_{AO}	Q_{BO}	Q_{CO}	Q_{DO}
↑	H	L	X	X	X	X	X	Q_{AO}	Q_{BO}	Q_{CO}	Q_{DO}
↑	H	H	X	X	X	X	X	Q_{AO}	Q_{BO}	Q_{CO}	Q_{DO}

Shifting left requires external connection of Q_B to A, Q_C to B, and Q_D to C.
Serial data is entered at input D.
H = high level (steady state), L = low level (steady state), X = irrelevant (any input, including transitions).
↓ = transition from high to low level, ↑ = transition from low to high level.
a, b, c, d = the level of steady state input at inputs A, B, C, or D, respectively.
Q_{AO}, Q_{BO}, Q_{CO}, Q_{DO} = the level of Q_A, Q_B, Q_C, or Q_D, respectively, before the indicated steady state input conditions were established.
Q_{An}, Q_{Bn}, Q_{Cn}, Q_{Dn} = the level of Q_A, Q_B, Q_C, or Q_D, respectively, before the most recent transition of the clock.

Figure 3. Truth tables and timing diagrams.

Device types 02 and 05

INPUTS				OUTPUTS		
CLEAR	CLOCK	A	B	Q_A	Q_B . . .	. . . Q_H
L	X	X	X	L	L	L
H	L	X	X	Q_{AO}	Q_{BO}	Q_{HO}
H	↑	H	H	H	Q_{An}	Q_{Gn}
H	↑	L	X	L	Q_{An}	Q_{Gn}
H	↑	X	L	L	Q_{An}	Q_{Gn}

H = high level (steady state), L = low level (steady state),
X = irrelevant (any input, including transitions).
↑ = transition from low to high level.
Q_{AO}, Q_{BO}, Q_{HO} = the level of Q_A, Q_B, or Q_H, respectively, before the indicated steady state input conditions were established.
Q_{An}, Q_{Gn}, = the level of Q_A or Q_G, respectively, before the most recent transition of the clock; indicates a one bit shift.

Typical clear, shift, and clear sequences.

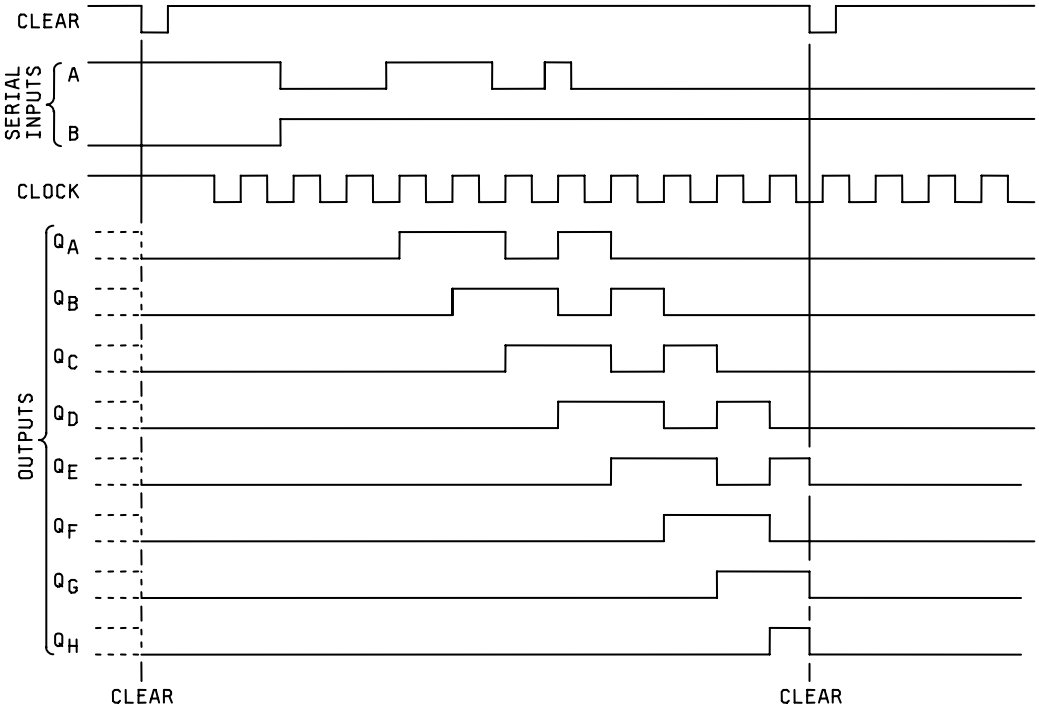

Figure 3. Truth tables and timing diagrams - Continued.

Device type 03

Shift selection			Output
D_S	D_0	D_1	$Q_7(tn+8)$
L	L	X	L
L	H	X	H
H	X	L	L
H	X	H	H

n+8 = Indicates state after eight clock pulse

L = Low voltage level

H = High voltage level

X = Either high or low voltage level

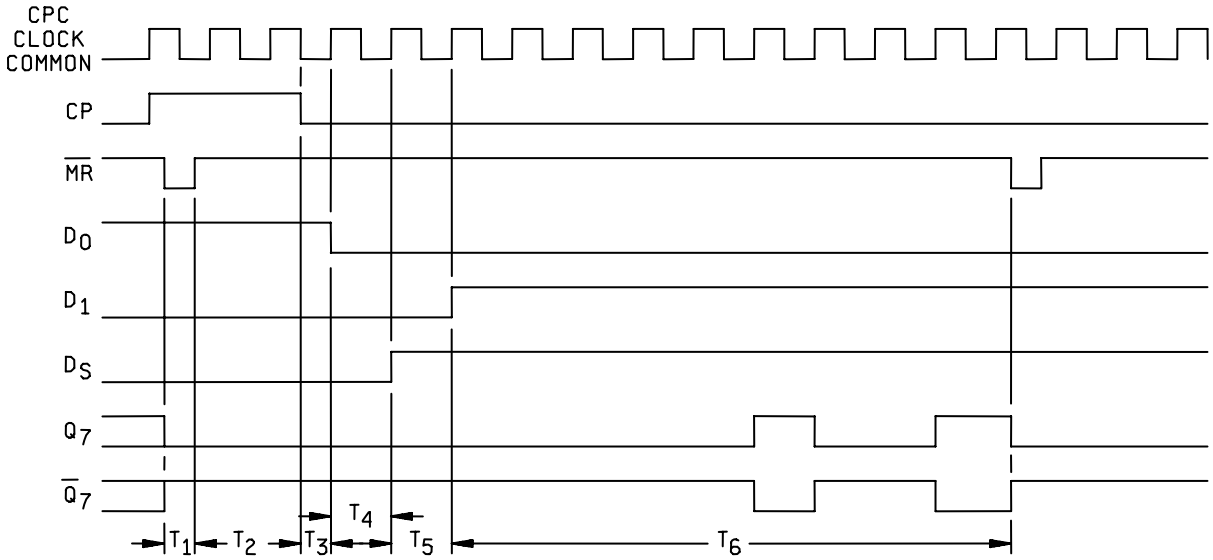

KEY TO SEQUENCE:

T_1 = Clear ($\overline{MR}$ LOW)

T_2 = Inhibit (CP HIGH)

T_3 = Load logic 'H' via D_0 (D_0 HIGH, D_S LOW)

T_4 = Load logic 'L' via D_0 (D_0 LOW, D_S LOW)

T_5 = Load 'L' via D_1 (D_1 LOW, D_S HIGH)

T_6 = Load logic 'H' via D_1 (D_1 HIGH, D_S HIGH)

Typical clear-inhibit-load-clear sequence.

Figure 3. Truth tables and timing diagrams - Continued.

Device type 04

3a. SERIAL ENTRY

($\overline{PE}$ = HIGH, $\overline{MR}$ = HIGH)

J	$\overline{K}$	Q_0 at tn+1
L	L	L
L	H	Q_0 at tn (no change)
H	L	Q_0 at tn (toggles)
H	H	H

3b. SERIAL ENTRY

($\overline{PE}$ = HIGH, $\overline{MR}$ = HIGH)

J and $\overline{K}$ Connected	Q_0 at tn+1
L	L
H	H

3c. PARALLEL ENTRY

($\overline{PE}$ = LOW, $\overline{MR}$ = HIGH)

D-Input (P_0, P_1, P_2, or P_3)	Output Q at tn+1 (Q_0, Q_1, Q_2, or Q_3)
L	L
H	H

(n + 1 = indicates state after next clock)

3d. MODE SELECTION

	$\overline{PE}$	P_0	P_1	P_2	P_3	J	$\overline{K}$	$\overline{MR}$
Serial Entry	H	X	X	X	X	Refer to Table 3a and 3b		H
Parallel Entry	L	Refer to Table 3c				X	X	H

H = HIGH voltage level
L = LOW voltage level
X = Don't care

Figure 3. Truth tables and timing diagrams - Continued.

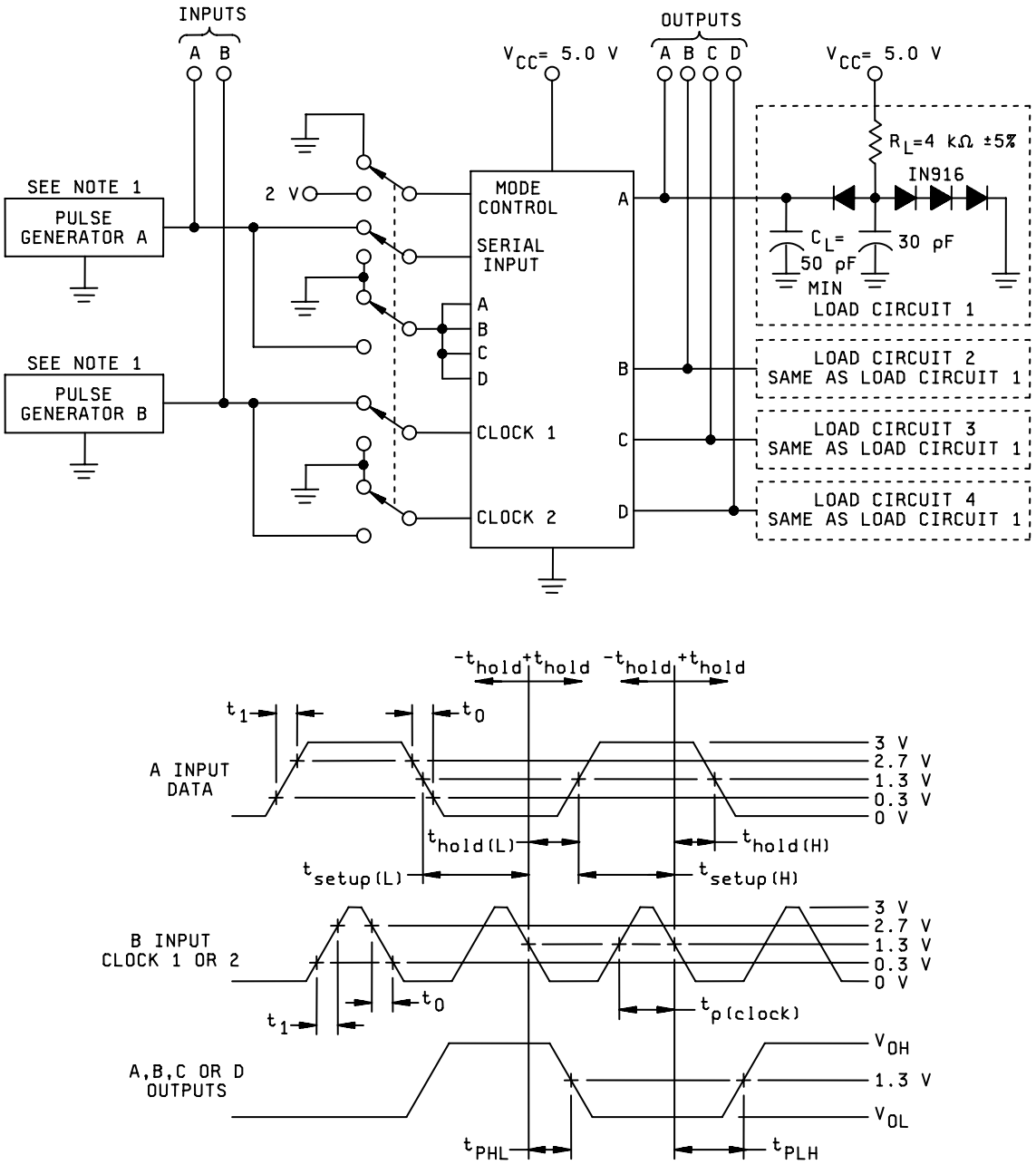

NOTES:

1. The pulse generators have the following characteristics: $t_1 \leq 15$ ns, $t_0 \leq 10$ ns, $Z_{OUT} \approx 50\ \Omega$. For pulse generator A: $t_P > 150$ ns and PRR = 500 kHz. For pulse generator B: $t_P > 10$ ns and PRR < 1 MHz. When testing f_{MAX}, vary PRR.
2. Voltage values are with respect to network ground terminal.
3. C_L includes probe and jig capacitance.

Figure 4. Switching test circuits, waveforms and mode control setup times for device type 01.

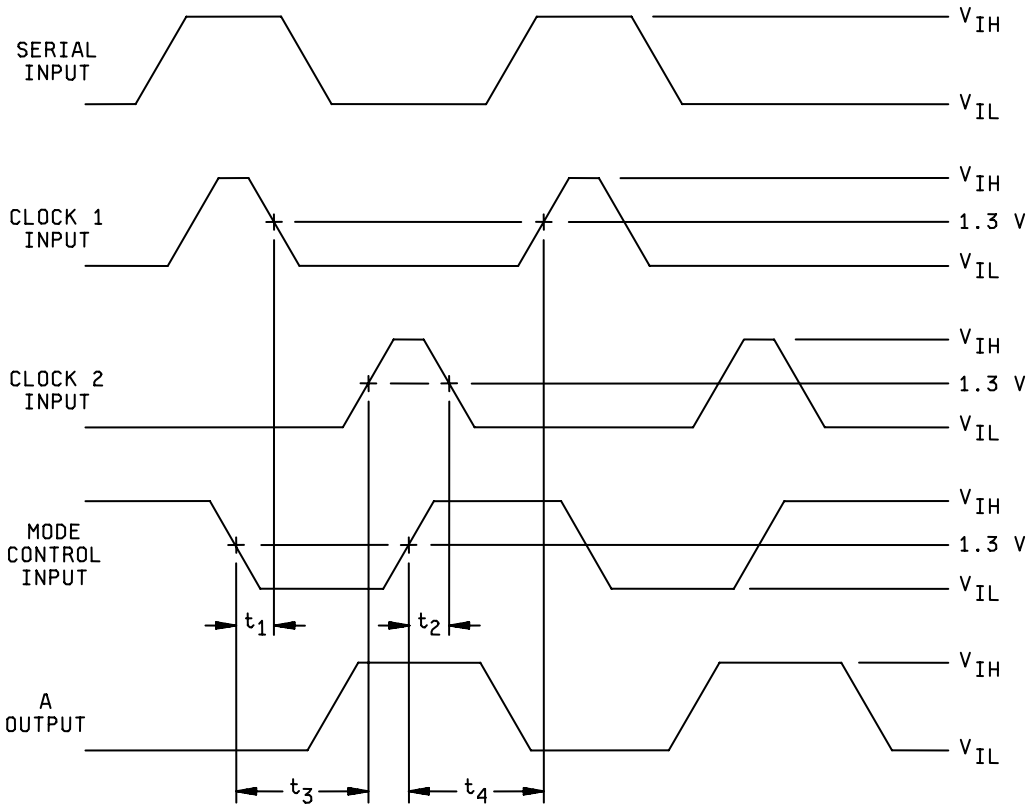

NOTES: A input is at V_{IL}.

Figure 4. Switching test circuits, waveforms and mode control setup times for device type 01 - Continued.

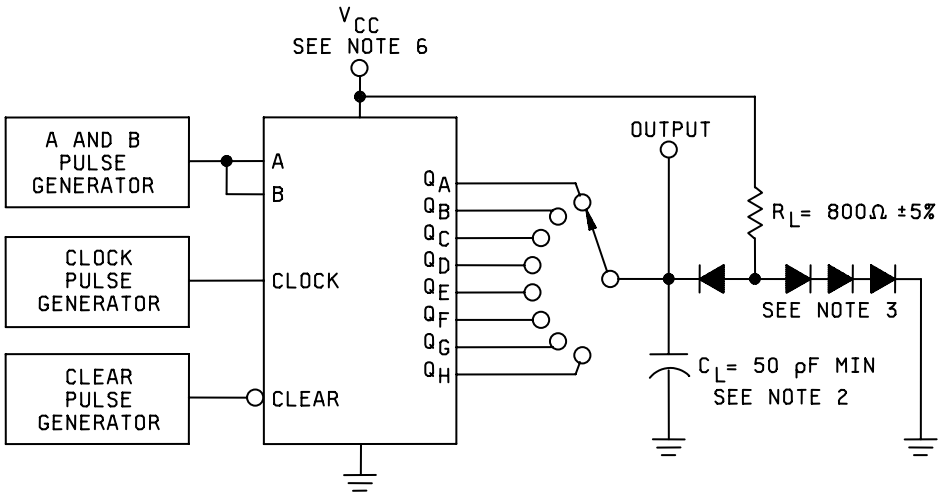

TEST CIRCUIT

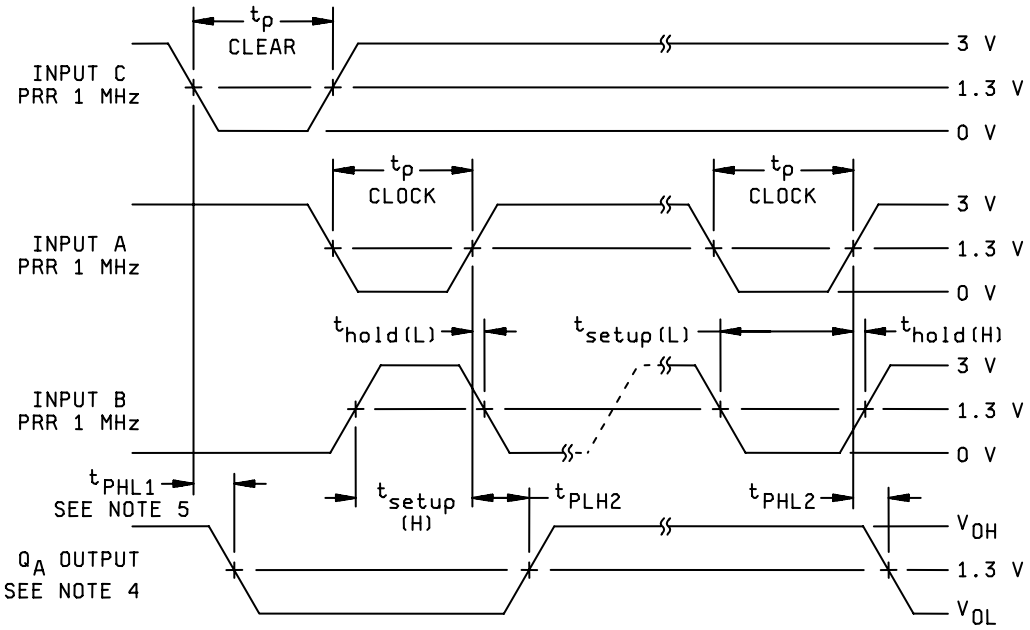

VOLTAGE WAVEFORM

NOTES:

1. The pulse generators have the following characteristics: t_r < 10 ns, t_f < 10 ns, duty cycle < 50%, $Z_{OUT} \approx 50\Omega$.
2. C_L = includes probe and jig capacitance.
3. All diodes are 1N916 or equivalent.
4. Q_A output is illustrated. Relationship of serial input A and B data to other Q outputs is illustrated in the typical shift sequence.
5. Outputs are set to the high level prior to the measurement of t_{PHL} for the clear input.
6. V_{CC} shall be of sufficient amplitude to provide 5 V at device terminal.

Figure 5. Switching test circuits and waveforms for device type 02.

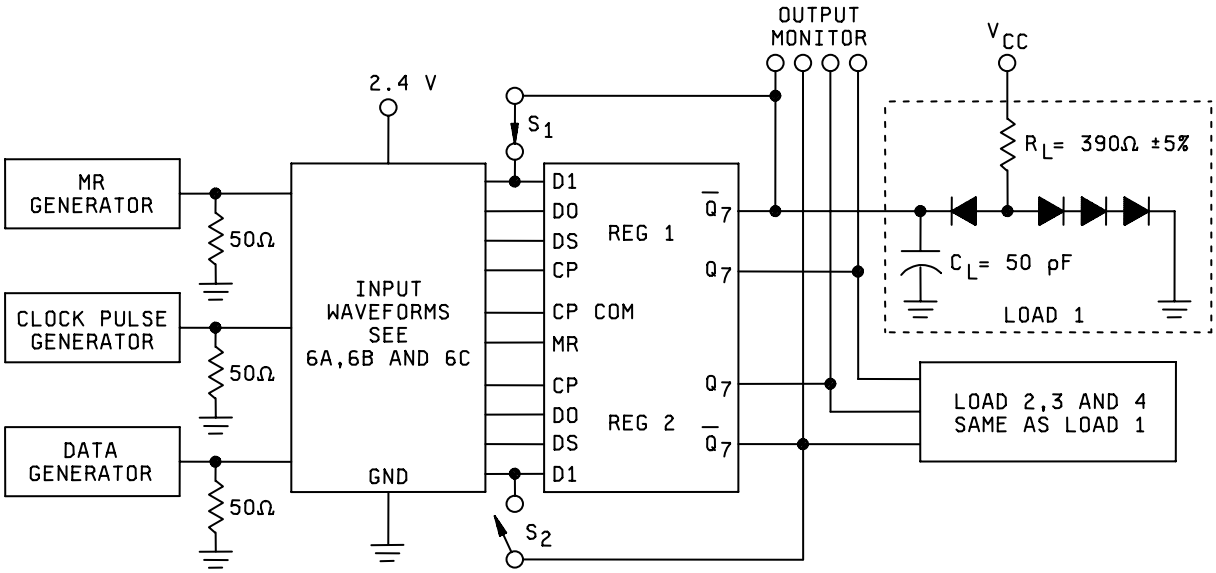

NOTES:
1. C_L = includes probe and jig capacitance.
2. All diodes are 1N3064 or equivalent.

Figure 6. Switching test circuit and waveforms for device type 03.

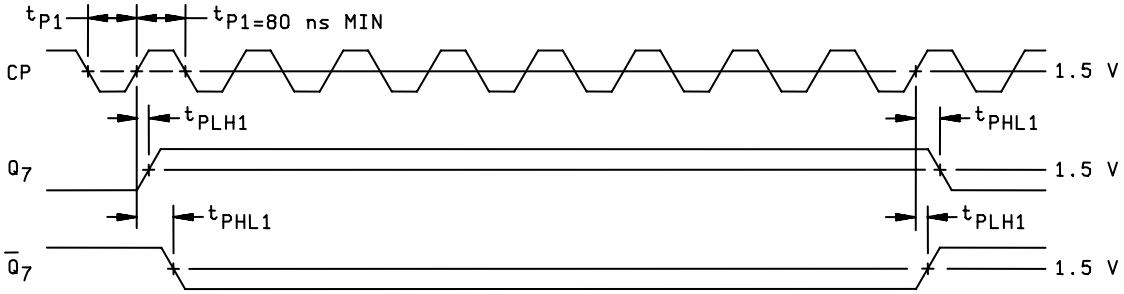

FIGURE 6a. PROPAGATION DELAY, CLOCK TO OUTPUT

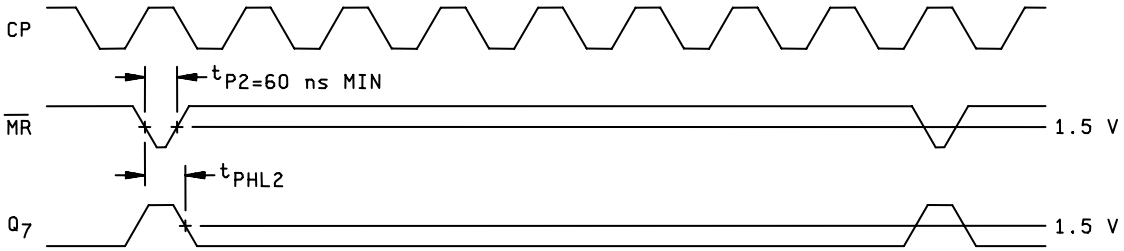

FIGURE 6b. PROPAGATION DELAY, $\overline{MR}$ TO OUTPUT WITH CLOCK HIGH

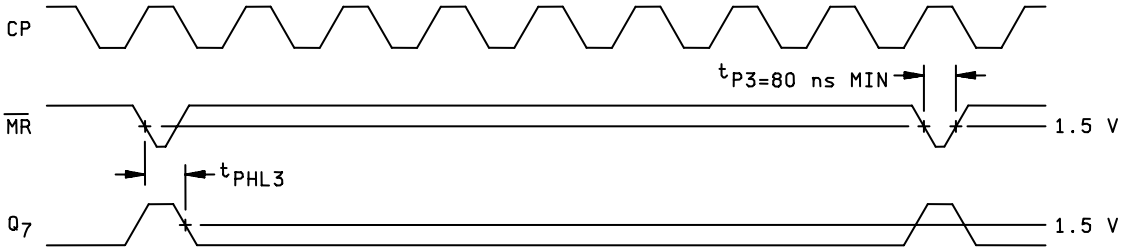

FIGURE 6c. PROPAGATION DELAY, $\overline{MR}$ TO OUTPUT WITH CLOCK LOW

Figure 6. Switching test circuit and waveforms for device type 03. - Continued.

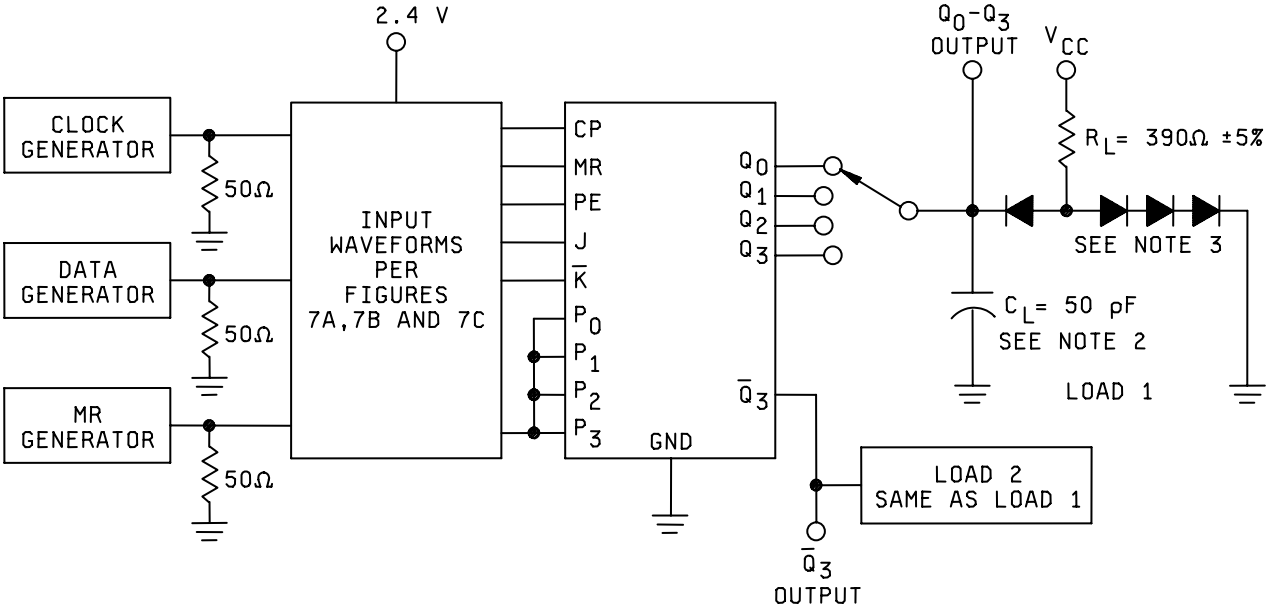

NOTES:

1. Generator rise and fall times (measured from 10% to 90% points) are < 5 ns.
2. C_L = includes probe and jig capacitance.
3. All diodes are 1N3064 or equivalent.
4. Monitor Q_3 loaded when performing f_{SR} test.

Figure 7. Switching test circuit and waveforms for device type 04.

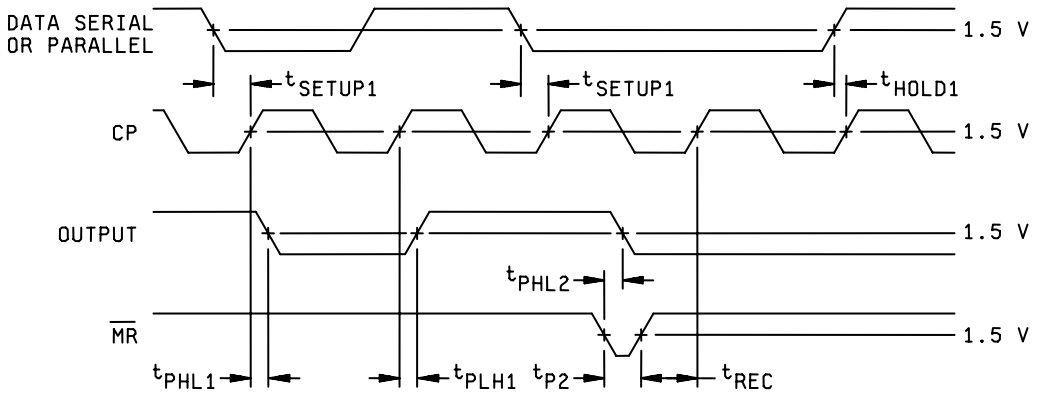

FIGURE 7a

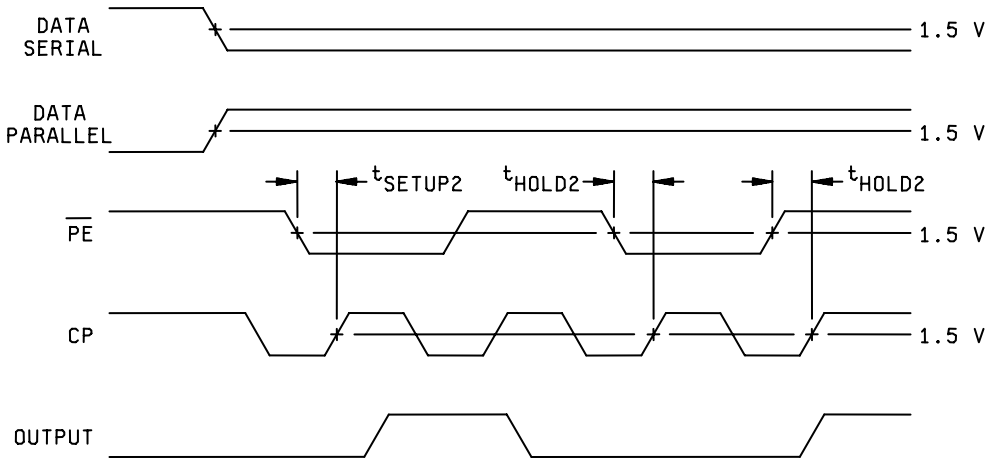

FIGURE 7b

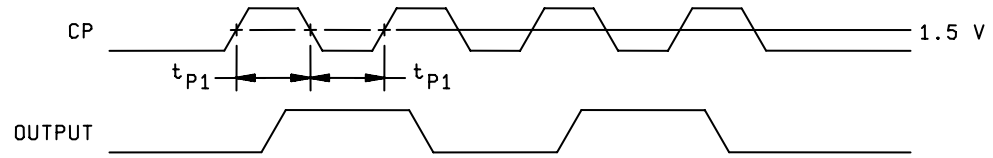

V_{OUT} FREQUENCY = 1/2 X V_{IN} FREQUENCY
J = HIGH, K = LOW, $\overline{PE}$ = HIGH, $\overline{MR}$ = HIGH

FIGURE 7c

Figure 7. Switching test circuit and waveforms for device type 04. - Continued.

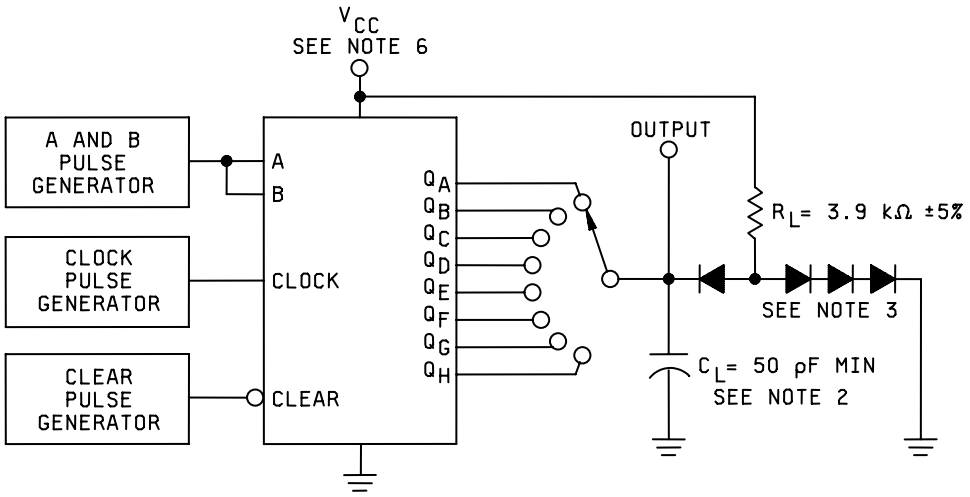

TEST CIRCUIT

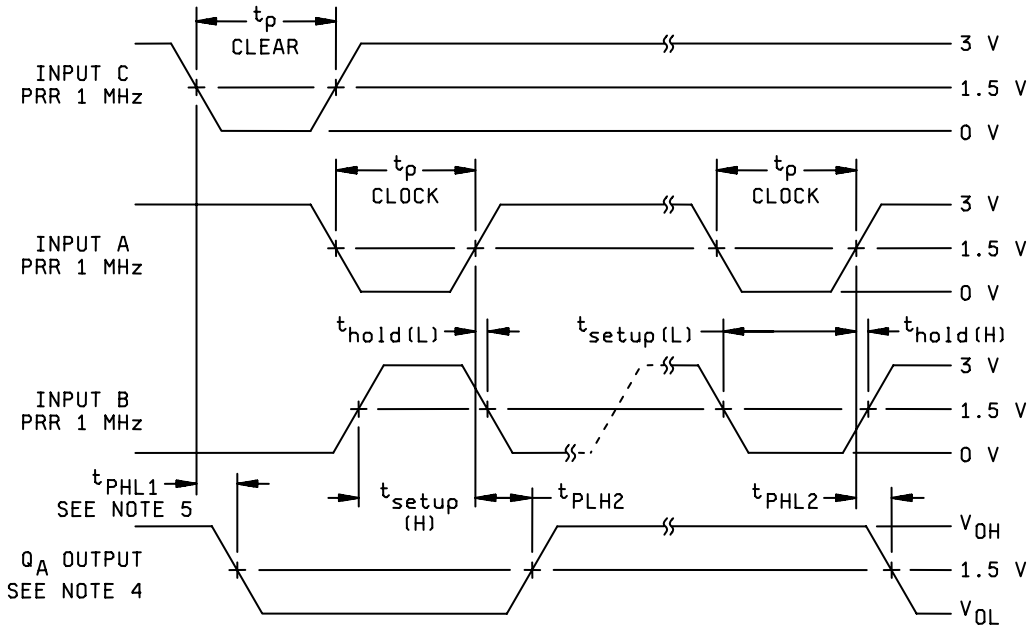

VOLTAGE WAVEFORM

NOTES:

1. The pulse generators have the following characteristics: t_r < 15 ns, t_f < 15 ns, duty cycle < 50%, $Z_{OUT} \approx 50\Omega$.
2. C_L = includes probe and jig capacitance.
3. All diodes are 1N916 or equivalent.
4. Q_A output is illustrated. Relationship of serial input A and B data to other Q outputs is illustrated in the typical shift sequence.
5. Outputs are set to the high level prior to the measurement of t_{PHL} for the clear input.
6. V_{CC} shall be of sufficient amplitude to provide 5 V at device terminal.

Figure 8. Switching time test circuit and waveforms for device type 05.

TABLE III. Group A inspection for device type 01.
Terminal conditions (pins not designated are open)

Subgroup	Symbol	MIL-STD-883 method	Cases A, B, C, D Test No.	1 Serial Input	2 Input B	3 Input C	4 V_{CC}	5 Input D	6 Mode control	7 Clock 1	8 Clock 2	9 Output QD	10 Output QC	11 GND	12 Output QB	13 Output QA	14 Input A	Meas. Terminal	Test limits Min	Test limits Max	Unit
1	V_{OH}	3006	1		2.0 V	2.0 V	4.5 V	2.0 V	2.0 V		C			GND		-.1 mA	2.0 V	OUT QA	2.4		
T_C = 25°C	"	"	2		"	"	"	"	"		C			"	-.1 mA		"	OUT QB	"		"
"	"	"	3		"	"	"	"	"		C		-.1 mA	"			"	OUT QC	"		"
"	"	"	4		"	"	"	"	"		C	-.1 mA		"			"	OUT QD	"	V	"
"	"	"	5	2.0 V	"	"	"	"	0.7 V	C				"		-.1 mA	"	OUT QA	"		"
"	V_{OL}	3007	6		0.7 V	0.7 V	"	0.7 V	2.0 V		C			"		2 mA	0.7 V	OUT QA		0.3	"
"	"	"	7		"	"	"	"	"		C			"	2 mA		"	OUT QB		"	"
"	"	"	8		"	"	"	"	"		C		2 mA	"			"	OUT QC		"	"
"	"	"	9		"	"	"	"	"		C	2 mA		"			"	OUT QD		"	"
"	"	"	10	0.7 V	"	"	"	"	0.7 V	C				"		2 mA	"	OUT QA		"	"
"	I_{IL1}	3009	11	0.3 V			5.5 V		GND					"				Serial In.	-0.06	-0.18	mA
"	"	"	12				"		4.5 V					"			0.3 V	A IN	"	"	"
"	"	"	13		0.3 V		"		"					"				B IN	"	"	"
"	"	"	14			0.3 V	"		"					"				C IN	"	"	"
"	"	"	15				"	0.3 V	"					"				D IN	"	"	"
"	"	"	16				"		GND	0.3 V				"				CLK 1	"	"	"
"	"	"	17				"		4.5 V		0.3 V			"				CLK 2	"	"	"
"	I_{IL2}	3009	18						0.3 V		4.5 V			"				Mode control	-0.12	-0.36	"
"	I_{IH1}	3010	19	2.4 V			"		4.5 V					"				Serial In.		10	µA
"	"	"	20			"	"		GND					"			2.4 V	A IN		"	"
"	"	"	21		2.4 V		"		"					"				B IN		"	"
"	"	"	22			2.4 V	"		"					"				C IN		"	"
"	"	"	23				"	2.4 V	"					"				D IN		"	"
"	"	"	24				"		4.5 V	4.5 V				"				CLK 1		"	"
"	"	"	25				"		GND		2.4 V			"				CLK 2		"	"
"	I_{IH2}	3010	26	5.5 V			"		4.5 V					"				Serial In.		100	"
"	"	"	27				"		GND					"			5.5 V	A IN		"	"
"	"	"	28		5.5 V		"		"					"				B IN		"	"
"	"	"	29			5.5 V	"		"					"				C IN		"	"
"	"	"	30				"	5.5 V	"					"				D IN		"	"
"	"	"	31				"		4.5 V	5.5 V				"				CLK 1		"	"
"	"	"	32				"		GND		5.5 V			"				CLK 2		"	"
"	I_{IH3}	3010	33						2.4 V		GND			"				Mode control		20	"
"	I_{IH4}	3010	34						5.5 V		GND			"				Mode control		200	"
"	I_{OS}	3011	35		4.5 V	4.5 V	"	4.5 V	4.5 V					"		GND	4.5 V	OUT QA	-3	-15	mA
"			36		"	"	"	"	"		C			"	GND		"	OUT QB	"	"	"
"			37		"	"	"	"	"		C		GND	"			"	OUT QC	"	"	"
"			38		"	"	"	"	"		C	GND		"			"	OUT QD	"	"	"
	I_{CC}	3005	39		0.8 V	0.8 V	"	0.8 V	4.5 V	C	C			"			0.8 V	V_{CC}		9	"
2	Same tests, terminal conditions and limits as for subgroup 1, except T_C = 125°C.																				
3	Same tests, terminal conditions and limits as for subgroup 1, except T_C = -55°C.																				
7 2/			40	B 3/	B 3/	B 3/	4.5 V	B 3/	A 3/	B 3/	B 3/	L 1/	L 1/	GND	L 1/	L 1/	B 3/	All	H or L		
T_C = 25°C			41	"	"	"	"	"	A	"	A	"	"	"	"	L	"	outputs	as shown 1/		
			42	"	"	"	"	"	A	"	B	"	"	"	"	L	"	"	"		
			43	"	"	"	"	"	B	"	"	"	"	"	"	L	"	"	"		
			44	A	"	"	"	"	B	"	"	"	"	"	"	L	"	"	"		

See footnotes at end of table.

TABLE III. Group A inspection for device type 01.
Terminal conditions (pins not designated are open)

Subgroup	Symbol	MIL-STD-883 method	Cases A, B, C, D	1	2	3	4	5	6	7	8	9	10	11	12	13	14	Meas. Terminal	Test limits		Unit
			Test No.	Serial Input	Input B	Input C	V_{CC}	Input D	Mode control	Clock 1	Clock 2	Output QD	Output QC	GND	Output QB	Output QA	Input A		Min	Max	
7 2/ T_C = 25°C			45	A	B 3/	B 3/	4.5 V	B	B	A	B	L 1/	L 1/	GND	L 1/	L 1/	B 3/	All outputs	H or L as shown 1/		
			46	A	"	"	"	"	"	B	"	"	"	"	"	H	"				
"			47	B	"	"	"	"	"	B	"	"	"	"	"	H	"	"	"		
"			48	B	"	"	"	"	"	A	"	"	"	"	"	H	"	"	"		
"			49	B	"	"	"	"	"	B	"	"	"	"	H	L	"	"	"		
"			50	A	"	"	"	"	"	B	"	"	"	"	H	L	"	"	"		
"			51	A	"	"	"	"	"	A	"	"	"	"	H	L	"	"	"		
"			52	A	"	"	"	"	"	B	"	"	H	"	L	H	"	"	"		
"			53	B	"	"	"	"	"	B	"	"	H	"	L	H	"	"	"		
"			54	B	"	"	"	"	"	A	"	"	H	"	L	H	"	"	"		
"			55	B	"	"	"	"	"	B	"	H	L	"	H	L	"	"	"		
"			56	A	"	"	"	"	"	B	"	H	L	"	H	L	"	"	"		
"			57	A	"	"	"	"	"	A	"	H	L	"	H	L	"	"	"		
"			58	A	"	"	"	"	"	B	"	L	H	"	L	H	"	"	"		
"			59	B	"	"	"	"	"	B	"	L	H	"	L	H	"	"	"		
"			60	"	"	"	"	"	"	A	"	L	H	"	L	H	"	"	"		
"			61	"	"	"	"	"	"	B	"	H	L	"	H	L	"	"	"		
"			62	"	"	"	"	"	"	B	"	H	L	"	H	"	"	"	"		
"			63	"	"	"	"	"	"	A	"	H	L	"	H	"	"	"	"		
"			64	"	"	"	"	"	"	B	"	L	H	"	L	"	"	"	"		
"			65	"	"	"	"	"	"	B	"	L	H	"	"	"	"	"	"		
"			66	"	"	"	"	"	"	A	"	L	H	"	"	"	"	"	"		
"			67	"	"	"	"	"	"	B	"	H	L	"	"	"	"	"	"		
"			68	"	"	"	"	"	"	B	"	H	"	"	"	"	"	"	"		
"			69	"	"	"	"	"	"	A	"	H	"	"	"	"	"	"	"		
"			70	"	"	"	"	"	"	B	"	L	"	"	"	"	"	"	"		
"			71	"	"	"	"	"	"	B	"	"	"	"	"	"	"	"	"		
"			72	"	"	"	"	"	"	A	"	"	"	"	"	"	"	"	"		
"			73	"	"	"	"	"	"	B	"	"	"	"	"	"	"	"	"		
"			74	"	"	A	"	"	"	"	"	"	"	"	"	"	A	"	"		
"			75	"	"	"	"	"	A	"	"	"	"	"	"	"	"	"	"		
"			76	"	"	"	"	"	"	"	A	"	"	"	"	"	"	"	"		
"			77	"	"	"	"	"	"	"	B	"	H	"	"	H	"	"	"		
"			78	"	A	B	"	A	"	"	B	"	H	"	"	H	B	"	"		
"			79	"	A	B	"	"	"	"	A	"	H	"	"	H	B	"	"		
"			80	"	"	A	"	"	"	"	B	H	L	"	H	L	B	"	"		
"			81	"	"	"	"	"	"	"	B	H	L	"	H	L	A	"	"		
"			82	"	"	"	"	"	"	"	A	H	L	"	H	L	A	"	"		
"			83	"	"	"	"	"	"	"	B	H	H	"	H	H	A	"	"		
"			84	"	B	B	"	B	"	"	B	H	H	"	H	H	B	"	"		
"			85	"	B	B	"	B	"	"	A	H	H	"	H	H	B	"	"		
"			86	"	B	B	"	B	"	"	B	L	L	"	L	L	B	"	"		
8	Same tests, terminal conditions, and limits as Subgroup 7, except T_C = 125°C and -55°C.																				
9 T_C = 25°C	f_{MAX}	Fig 4	87	D	GND	GND	5.0 V	GND	GND	C	GND	OUT		"			GND	OUT QD	4		MHz
	f_{MAX}	Fig 4	88	GND	D	D	"	D	2.4 V	GND	C	OUT					D	OUT QD	4		MHz
"	t_{PLH}	3003 (Fig 4)	89	D	GND	GND	"	GND	GND	C	GND			"		OUT	GND	CLK to OUT QA			ns
"	"	"	90	"	"	"	"	"	"	"	"		GND	"	OUT		"	CLK 1 to OUT QB	165	"	"
"	"	"	91	"	"	"	"	"	"	"	"		OUT	"			"	CLK 1 to OUT QC		"	"
"	"	"	92	"	"	"	"	"	"	"	"	OUT		"			"	CLK 1 to OUT QD		"	"

See footnotes at end of table.

TABLE III. Group A inspection for device type 01 – Continued
Terminal conditions (pins not designated are open)

Subgroup	Symbol	MIL-STD-883 method	Cases A, B, C, D Test No.	1 Serial Input	2 Input B	3 Input C	4 V_{CC}	5 Input D	6 Mode control	7 Clock 1	8 Clock 2	9 Output QD	10 Output QC	11 GND	12 Output QB	13 Output QA	14 Input A	Meas. Terminal	Test limits Min	Test limits Max	Unit
9 $T_C = 25°C$	t_{PLH}	3003 (Fig 4)	93	GND	D	D	5.0 V	D	2.4 V	GND	C			GND			D	CLK 2 to OUT QA			ns
"	"	"	94	"	"	"	"	"	"	"	"			"			"	CLK 2 to OUT QB	165	"	"
"	"	"	95	"	"	"	"	"	"	"	"			"	OUT		"	CLK 2 to OUT QC		"	"
"	"	"	96	"	"	"	"	"	"	"	"			"			"	CLK 2 to OUT QD		"	"
"	t_{PHL}	"	97	D	GND	GND	"	GND	GND	C	GND			"		OUT	GND	CLK 1 to OUT QA			ns
"	"	"	98	"	"	"	"	"	"	"	"			"	OUT		"	CLK 1 to OUT QB	165	"	"
"	"	"	99	"	"	"	"	"	"	"	"			"			"	CLK 1 to OUT QC		"	"
"	"	"	100	"	"	"	"	"	"	"	"			"			"	CLK 1 to OUT QD		"	"
"	"	"	101	GND	D	D	"	D	2.4 V	GND	C			"		OUT	D	CLK 2 to OUT QA		"	"
"	"	"	102	"	"	"	"	"	"	"	"			"	OUT		"	CLK 2 to OUT QB		"	"
"	"	"	103	"	"	"	"	"	"	"	"		OUT	"			"	CLK 2 to OUT QC		"	"
"	"	"	104	"	"	"	"	"	"	"	"	OUT		"			"	CLK 2 to OUT QD		"	"
10 $T_C = 125°C$	f_{MAX}	Fig 4	105	D	GND	GND	"	GND	GND	C	GND	OUT		"			GND	OUTPUT D	3		MHz
	f_{MAX}	Fig 4	106	GND	D	D	"	D	2.4 V	GND	C	OUT		"			D	OUTPUT D	3		MHz
"	t_{PLH}	3003 (Fig 4)	107	D	GND	GND	"	GND	GND	C	GND			"		OUT	GND	CLK 1 to OUT QA			ns
"	"	"	108	"	"	"	"	"	"	"	"			"	OUT		"	CLK 1 to OUT QB	250	"	"
"	"	"	109	"	"	"	"	"	"	"	"		OUT	"			"	CLK 1 to OUT QC		"	"
"	"	"	110	"	"	"	"	"	"	"	"	OUT		"			"	CLK 1 to OUT QD		"	"
"	"	"	111	GND	D	D	"	D	2.4 V	GND	C			"		OUT	D	CLK 2 to OUT QA		"	"
"	"	"	112	"	"	"	"	"	"	"	"			"	OUT		"	CLK 2 to OUT QB		"	"
"	"	"	113	"	"	"	"	"	"	"	"		OUT	"			"	CLK 2 to OUT QC		"	"
"	"	"	114	"	"	"	"	"	"	"	"	OUT		"			"	CLK 2 to OUT QD		"	"
"	t_{PHL}	"	115	D	GND	GND	"	GND	GND	C	GND			"		OUT	GND	CLK 1 to OUT QA			ns
"	"	"	116	"	"	"	"	"	"	"	"			"	OUT		"	CLK 1 to OUT QB	250	"	"
"	"	"	117	"	"	"	"	"	"	"	"		OUT	"			"	CLK 1 to OUT QC		"	"
"	"	"	118	"	"	"	"	"	"	"	"	OUT		"			"	CLK 1 to OUT QD		"	"
"	"	"	119	GND	D	D	"	D	2.4 V	GND	C			"		OUT	D	CLK 2 to OUT QA		"	"
"	"	"	120	GND	D	D	"	D	2.4 V	GND	C			"	OUT		D	CLK 2 to OUT QB		"	"

See footnotes at end of table.

TABLE III. Group A inspection for device type 01 – Continued
Terminal conditions (pins not designated are open)

Subgroup	Symbol	MIL-STD-883 method	Cases A, B, C, D	1	2	3	4	5	6	7	8	9	10	11	12	13	14	Meas. Terminal	Test limits		Unit
			Test No.	Serial Input	Input B	Input C	V_{CC}	Input D	Mode control	Clock 1	Clock 2	Output QD	Output QC	GND	Output QB	Output QA	Input A		Min	Max	
10	t_{PHL}	3003	121	GND	D	D	5.0 V	D	2.4 V	GND	C		OUT	GND			D	CLK 2 to OUT QC			ns
T_C= 125°C	"	(Fig 4)																	250	250	
"	"	"	122	GND	D	D	5.0 V	D	2.4 V	GND	C	OUT		GND			D	CLK 2 to OUT QD			ns
11	Same tests, terminal conditions and limits as for subgroup 10, except T_C = -55°C.																				

NOTES: C = Clock pulse, see figure 4.
D = Data pulse, see figure 4.

1/ Output voltages shall be either: (a) H = 2.4 V, minimum and L = 0.4 V, maximum when using a high speed checker double comparator; or
(b) H ≥ 1.5 V and L < 1.5 V when using a high speed checker single comparator.

2/ Only a summary of attributes data is required.

TABLE III. Group A inspection for device type 02.
Terminal conditions (pins not designated are open)

Subgroup	Symbol	MIL-STD-883 method	Cases A, B, C, D Test No.	1 Serial Input A	2 Serial Input B	3 Output QA	4 Output QB	5 Output QC	6 Output QD	7 GND	8 Clock	9 Clear	10 Output QE	11 Output QF	12 Output QG	13 Output QH	14 V_{CC}	Meas. terminal	Test limits Min	Test limits Max	Test limits Unit
1	V_{OH}	3006	1	2.0 V	2.0 V	-.2 mA				GND	C	4.5 V					4.5 V	OUT QA	2.4		
T_C= 25°C	"	"	2	"	"		-.2 mA			"	"	"					"	OUT QB	"		"
"	"	"	3	"	"			-.2 mA		"	"	"					"	OUT QC	"		"
"	"	"	4	"	"				-.2 mA	"	"	"					"	OUT QD	"		"
"	"	"	5	"	"					"	"	"	-.2 mA				"	OUT QE	"	V	"
"	"	"	6	"	"					"	"	"		-.2 mA			"	OUT QF	"		"
"	"	"	7	"	"					"	"	"			-.2 mA		"	OUT QG	"		"
"	"	"	8	"	"					"	"	"				-.2 mA	"	OUT QH	"		"
"	"	"	9	4.5 V	4.5 V	-.2 mA				"	"	2.0 V					"	OUT QA	"		"
"	V_{OL}	3007	10	0.8 V	0.8 V	4 mA				"	"	4.5 V					"	OUT QA			V
"	"	"	11	"	"		4 mA			"	"	"					"	OUT QB		"	"
"	"	"	12	"	"			4 mA		"	"	"					"	OUT QC		"	"
"	"	"	13	"	"				4 mA	"	"	"					"	OUT QD		"	"
"	"	"	14	"	"					"	"	"	4 mA				"	OUT QE	0.4	"	"
"	"	"	15	"	"					"	"	"		4 mA			"	OUT QF		"	"
"	"	"	16	"	"					"	"	"			4 mA		"	OUT QG		"	"
"	"	"	17	"	"					"	"	"				4 mA	"	OUT QH		"	"
"	"	"	18	2.0 V	"	4 mA				"	"	"					"	OUT QA		"	"
"	"	"	19	0.8 V	2.0 V	4 mA				"	"	0.8 V					"	OUT QA		"	"
"	"	"	20	4.5 V	4.5 V	4 mA				"	"	0.8 V					"	OUT QA		"	"
"	I_{IL}	3009	21	0.4 V	4.5 V					"							5.5 V	Serial In A	-0.35	-0.8	mA
"	"	"	22	4.5 V	0.4 V					"							"	Serial In B	"	"	"
"	"	"	23							"	0.4 V						"	CLK	"	"	"
"	"	"	24							"		0.4 V					"	CLR	"	"	"
"	I_{IH1}	3010	25	2.4 V	GND					"							"	Serial In A			µA
"	"	"	26	GND	2.4 V					"							"	Serial In B		"	"
"	"	"	27							"	2.4 V						"	CLK		"	"
"	"	"	28							"		2.4 V					"	CLR		"	"
"	I_{IH2}	3010	29	5.5 V	GND					"							"	Serial In A	20		mA
"	"	"	30	GND	5.5 V					"							"	Serial In B		"	"
"	"	"	31							"	5.5 V						"	CLK		"	"
"	"	"	32							"		5.5 V					"	CLR		"	"

.1

See footnotes at end of table.

TABLE III. Group A inspection for device type 02 – Continued.
Terminal conditions (pins not designated are open)

Subgroup	Symbol	MIL-STD-883 method	Cases A, B, C, D Test No.	1 Serial Input A	2 Serial Input B	3 Output QA	4 Output QB	5 Output QC	6 Output QD	7 GND	8 Clock	9 Clear	10 Output QE	11 Output QF	12 Output QG	13 Output QH	14 V_{CC}	Meas. terminal	Test limits Min	Test limits Max	Test limits Unit
1	I_{OS}	3011	33	4.5 V	4.5 V	GND				GND	A	4.5 V					5.5 V	OUT QA	-5	-20	mA
T_C = 25°C	"	"	34				GND			"	"	"					"	OUT QB	"	"	"
"	"	"	35					GND		"	"	"					"	OUT QC	"	"	"
"	"	"	36						GND	"	"	"					"	OUT QD	"	"	"
"	"	"	37							"	"	"	GND				"	OUT QE	"	"	"
"	"	"	38							"	"	"		GND			"	OUT QF	"	"	"
"	"	"	39							"	"	"			GND		"	OUT QG	"	"	"
"	"	"	40							"	"	"				GND	"	OUT QH	"	"	"
"	I_{CC}		41	GND	GND					"	2.4 V	B					"	V_{CC}		27	"
2	Same tests, terminal conditions and limits as for subgroup 1, except T_C = 125°C.																				
3	Same tests, terminal conditions and limits as for subgroup 1, except T_C = -55°C.																				
7 2/			42	A 3/	A 3/	L 1/	L 1/	L 1/	L 1/	GND	A 3/	B 3/	L 1/	L 1/	L 1/	L 1/	4.5 V	All	H or L		
T_C = 25°C			43	"	"	"	"	"	"	"	A	A	"	"	"	"	"	outputs	as shown 1/		
"			44	"	"	"	"	"	"	"	B	"	"	"	"	"	"	"	"		
"			45	"	"	H	"	"	"	"	A	"	"	"	"	"	"	"	"		
"			46	"	"	"	"	"	"	"	B	"	"	"	"	"	"	"	"		
"			47	"	"	"	H	"	"	"	A	"	"	"	"	"	"	"	"		
"			48	"	"	"	"	"	"	"	B	"	"	"	"	"	"	"	"		
"			49	"	"	"	"	H	"	"	A	"	"	"	"	"	"	"	"		
"			50	"	"	"	"	"	"	"	B	"	"	"	"	"	"	"	"		
"			51	"	"	"	"	"	H	"	A	"	"	"	"	"	"	"	"		
"			52	"	"	"	"	"	"	"	B	"	"	"	"	"	"	"	"		
"			53	"	"	"	"	"	"	"	A	"	H	"	"	"	"	"	"		
"			54	"	"	"	"	"	"	"	B	"	"	"	"	"	"	"	"		
"			55	"	"	"	"	"	"	"	A	"	"	H	"	"	"	"	"		
"			56	"	"	"	"	"	"	"	B	"	"	"	"	"	"	"	"		
"			57	"	"	"	"	"	"	"	A	"	"	"	H	"	"	"	"		
"			58	"	"	"	"	"	"	"	B	"	"	"	"	"	"	"	"		
"			59	"	"	"	"	"	"	"	A	"	"	"	"	H	"	"	"		
"			60	B	"	"	"	"	"	"	A	"	"	"	"	"	"	"	"		
"			61	"	"	"	"	"	"	"	B	"	"	"	"	"	"	"	"		
"			62	"	"	L	"	"	"	"	A	"	"	"	"	"	"	"	"		
"			63	"	"	"	"	"	"	"	B	"	"	"	"	"	"	"	"		
"			64	"	"	"	L	"	"	"	A	"	"	"	"	"	"	"	"		
"			65	"	"	"	"	"	"	"	B	"	"	"	"	"	"	"	"		
"			66	"	"	"	"	L	"	"	A	"	"	"	"	"	"	"	"		
"			67	"	"	"	"	"	"	"	B	"	"	"	"	"	"	"	"		
"			68	"	"	"	"	"	L	"	A	"	"	"	"	"	"	"	"		
"			69	"	"	"	"	"	"	"	B	"	"	"	"	"	"	"	"		
"			70	"	"	"	"	"	"	"	A	"	L	"	"	"	"	"	"		
"			71	"	"	"	"	"	"	"	B	"	"	"	"	"	"	"	"		
"			72	"	"	"	"	"	"	"	A	"	"	L	"	"	"	"	"		
"			73	"	"	"	"	"	"	"	B	"	"	"	"	"	"	"	"		
"			74	"	"	"	"	"	"	"	A	"	"	"	L	"	"	"	"		
"			75	"	"	"	"	"	"	"	B	"	"	"	"	"	"	"	"		
"			76	"	"	"	"	"	"	"	A	"	"	"	"	L	"	"	"		
"			77	A	"	"	"	"	"	"	A	"	"	"	"	L	"	"	"		

See footnotes at end of table.

TABLE III. Group A inspection for device type 02 – Continued.
Terminal conditions (pins not designated are open)

Subgroup	Symbol	MIL-STD-883 method	Cases A, B, C, D	1	2	3	4	5	6	7	8	9	10	11	12	13	14	Meas. terminal	Test limits		
			Test No.	Serial Input A	Serial Input B	Output QA	Output QB	Output QC	Output QD	GND	Clock	Clear	Output QE	Output QF	Output QG	Output QH	V_{CC}		Min	Max	Unit
7			78	A 3	A 3/	L 1/	L 1/	L 1/	L 1/	GND	B	A 1/	L 1/	L 1/	L 1/	L 1/	4.5 V	All	H or L		
T_C = 25°C			79	"	"	H	"	"	"	"	A	"	"	"	"	"	"	outputs	as shown 1/		
"			80	"	"	"	"	"	"	"	B	"	"	"	"	"	"	"	"		
"			81	"	"	"	H	"	"	"	A	"	"	"	"	"	"	"	"		
"			82	"	"	"	"	"	"	"	B	"	"	"	"	"	"	"	"		
"			83	"	"	"	"	H	"	"	A	"	"	"	"	"	"	"	"		
"			84	"	"	"	"	"	"	"	B	"	"	"	"	"	"	"	"		
"			85	"	"	"	"	"	H	"	A	"	"	"	"	"	"	"	"		
"			86	"	"	"	"	"	"	"	B	"	"	"	"	"	"	"	"		
"			87	"	"	"	"	"	"	"	A	"	H	"	"	"	"	"	"		
"			88	"	"	"	"	"	"	"	B	"	"	"	"	"	"	"	"		
"			89	"	"	"	"	"	"	"	A	"	"	H	"	"	"	"	"		
"			90	"	"	"	"	"	"	"	B	"	"	"	"	"	"	"	"		
"			91	"	"	"	"	"	"	"	A	"	"	"	H	"	"	"	"		
"			92	"	"	"	"	"	"	"	B	"	"	"	"	"	"	"	"		
"			93	"	"	"	"	"	"	"	A	"	"	"	"	H	"	"	"		
"			94	"	B	"	"	"	"	"	A	"	"	"	"	"	"	"	"		
"			95	"	"	"	"	"	"	"	B	"	"	"	"	"	"	"	"		
"			96	"	"	L	"	"	"	"	A	"	"	"	"	"	"	"	"		
"			97	"	"	"	"	"	"	"	B	"	"	"	"	"	"	"	"		
"			98	"	"	"	L	"	"	"	A	"	"	"	"	"	"	"	"		
"			99	"	"	"	"	"	"	"	B	"	"	"	"	"	"	"	"		
"			100	"	"	"	"	L	"	"	A	"	"	"	"	"	"	"	"		
"			101	"	"	"	"	"	"	"	B	"	"	"	"	"	"	"	"		
"			102	"	"	"	"	"	L	"	A	"	"	"	"	"	"	"	"		
"			103	"	"	"	"	"	"	"	B	"	"	"	"	"	"	"	"		
"			104	"	"	"	"	"	"	"	A	"	L	"	"	"	"	"	"		
"			105	"	"	"	"	"	"	"	B	"	"	"	"	"	"	"	"		
"			106	"	"	"	"	"	"	"	A	"	"	L	"	"	"	"	"		
"			107	"	"	"	"	"	"	"	B	"	"	"	"	"	"	"	"		
"			108	"	"	"	"	"	"	"	A	"	"	"	L	"	"	"	"		
"			109	"	"	"	"	"	"	"	B	"	"	"	"	"	"	"	"		
"			110	"	"	"	"	"	"	"	A	"	"	"	"	L	"	"	"		
"			111	"	A	"	"	"	"	"	A	"	"	"	"	"	"	"	"		
"			112	"	"	"	"	"	"	"	B	"	"	"	"	"	"	"	"		
"			113	"	"	H	"	"	"	"	A	"	"	"	"	"	"	"	"		
"			114	"	"	"	"	"	"	"	B	"	"	"	"	"	"	"	"		
"			115	"	"	"	H	"	"	"	A	"	"	"	"	"	"	"	"		
"			116	"	"	"	"	"	"	"	B	"	"	"	"	"	"	"	"		
"			117	"	"	"	"	H	"	"	A	"	"	"	"	"	"	"	"		
"			118	"	"	"	"	"	"	"	B	"	"	"	"	"	"	"	"		
"			119	"	"	"	"	"	H	"	A	"	"	"	"	"	"	"	"		
"			120	"	"	"	"	"	H	"	B	"	"	"	"	"	"	"	"		
"			121	"	"	"	"	"	"	"	A	"	H	"	"	"	"	"	"		
"			122	"	"	"	"	"	"	"	B	"	"	"	"	"	"	"	"		
"			123	"	"	"	"	"	"	"	A	"	"	H	"	"	"	"	"		
"			124	"	"	"	"	"	"	"	B	"	"	"	"	"	"	"	"		
"			125	"	"	"	"	"	"	"	A	"	"	"	H	"	"	"	"		
"			126	"	"	"	"	"	"	"	B	"	"	"	"	"	"	"	"		
"			127	"	"	"	"	"	"	"	A	"	"	"	"	H	"	"	"		
"			128	B	B	"	"	"	"	"	A	"	"	"	"	"	"	"	"		
"			129	"	"	"	"	"	"	"	B	"	"	"	"	"	"	"	"		
"			130	"	"	L	"	"	"	"	A	"	"	"	"	"	"	"	"		
"			131	"	"	"	"	"	"	"	B	"	"	"	"	"	"	"	"		
"			132	"	"	"	L	"	"	"	A	"	"	"	"	"	"	"	"		
"			133	"	"	"	"	"	"	"	B	"	"	"	"	"	"	"	"		
"			134	"	"	"	"	L	"	"	A	"	"	"	"	"	"	"	"		

See footnotes at end of table.

TABLE III. Group A inspection for device type 02 – Continued.
Terminal conditions (pins not designated are open)

Subgroup	Symbol	MIL-STD-883 method	Cases A, B, C, D	1	2	3	4	5	6	7	8	9	10	11	12	13	14	Meas. terminal	Test limits		
			Test No.	Serial Input A	Serial Input B	Output QA	Output QB	Output QC	Output QD	GND	Clock	Clear	Output QE	Output QF	Output QG	Output QH	V_{CC}		Min	Max	Unit
7 2/			135	B 3/	B 2/	L 1/	L 1/	L 1/	H 1/	GND	B 3/	A 3/	H 1/	H 1/	H 1/	H 1/	4.5 V	All	H or L		
T_C = 25°C			136	"	"	"	"	"	L	"	A	"	"	"	"	"	"	outputs	as shown 1/		
"			137	"	"	"	"	"	"	"	B	"	"	"	"	"	"	"	"		
"			138	"	"	"	"	"	"	"	A	"	L	"	"	"	"	"	"		
"			139	"	"	"	"	"	"	"	B	"	"	"	"	"	"	"	"		
"			140	"	"	"	"	"	"	"	A	"	"	L	"	"	"	"	"		
"			141	"	"	"	"	"	"	"	B	"	"	"	"	"	"	"	"		
"			142	"	"	"	"	"	"	"	A	"	"	"	L	"	"	"	"		
"			143	"	"	"	"	"	"	"	B	"	"	"	"	"	"	"	"		
"			144	"	"	"	"	"	"	"	A	"	"	"	"	L	"	"	"		
"			145	A	A	"	"	"	"	"	A	"	"	"	"	"	"	"	"		
"			146	"	"	"	"	"	"	"	B	"	"	"	"	"	"	"	"		
"			147	"	"	H	"	"	"	"	A	"	"	"	"	"	"	"	"		
"			148	"	"	"	"	"	"	"	B	"	"	"	"	"	"	"	"		
"			149	"	"	"	H	"	"	"	A	"	"	"	"	"	"	"	"		
"			150	"	"	"	"	"	"	"	B	"	"	"	"	"	"	"	"		
"			151	"	"	"	"	H	"	"	A	"	"	"	"	"	"	"	"		
"			152	"	"	"	"	"	"	"	B	"	"	"	"	"	"	"	"		
"			153	"	"	"	"	"	H	"	A	"	"	"	"	"	"	"	"		
"			154	"	"	"	"	"	"	"	B	"	"	"	"	"	"	"	"		
"			155	"	"	"	"	"	"	"	A	"	H	"	"	"	"	"	"		
"			156	"	"	"	"	"	"	"	B	"	"	"	"	"	"	"	"		
"			157	"	"	"	"	"	"	"	A	"	"	H	"	"	"	"	"		
"			158	"	"	"	"	"	"	"	A	"	"	"	"	"	"	"	"		
"			159	"	"	"	"	"	"	"	B	"	"	"	H	"	"	"	"		
"			160	"	"	"	"	"	"	"	A	"	"	"	H	"	"	"	"		
"			161	"	"	"	"	"	"	"	B	"	"	"	H	H	"	"	"		
"			162	"	"	L	L	L	L	"	B	B	L	L	L	L	"	"	"		
8	Same tests, terminal conditions and limits as for subgroup 7, except T_C = 125°C and -55°C.																				
9	F_{MAX}	Fig 5	163	G	G					GND	F	H				OUT	5.0 V	QH	12		MHz
T_C = 25°C	t_{PHL1}	3003	164	E, G	E, G	OUT				GND	F	H					5.0 V	CLR to QA	10	70	ns
"	"	(Fig 5)	165	"	"		OUT			"	"	"					"	CLR to QB	"	"	"
"	"	"	166	"	"			OUT		"	"	"					"	CLR to QC	"	"	"
"	"	"	167	"	"				OUT	"	"	"					"	CLR to QD	"	"	"
"	"	"	168	"	"					"	"	"	OUT				"	CLR to QE	"	"	"
"	"	"	169	"	"					"	"	"		OUT			"	CLR to QF	"	"	"
"	"	"	170	"	"					"	"	"			OUT		"	CLR to QG	"	"	"
"	"	"	171	"	"					"	"	"				OUT	"	CLR to QH	"	"	"
"	t_{PLH2}	"	172	G	G	OUT				"	"	"					"	CLR to QA	"	40	"
"	"	"	173	"	"		OUT			"	"	"					"	CLR to QB	"	"	"
"	"	"	174	"	"			OUT		"	"	"					"	CLR to QC	"	"	"
"	"	"	175	"	"				OUT	"	"	"					"	CLR to QD	"	"	"
"	"	"	176	"	"					"	"	"	OUT				"	CLR to QE	"	"	"

See footnotes at end of table.

TABLE III. Group A inspection for device type 02 – Continued.
Terminal conditions (pins not designated are open)

Subgroup	Symbol	MIL-STD-883 method	Cases A, B, C, D Test No.	1 Serial Input A	2 Serial Input B	3 Output QA	4 Output QB	5 Output QC	6 Output QD	7 GND	8 Clock	9 Clear	10 Output QE	11 Output QF	12 Output QG	13 Output QH	14 V_{CC}	Meas. terminal	Test limits Min	Test limits Max	Test limits Unit
9	t_{PLH2}	Fig 5	177	G	G					GND	F	H					5.0 V	CLR to QF	10	40	ns
T_C = 25°C	"	"	178	"	"					"	"	"			OUT		"	CLR to QG	"	"	"
"	"	"	179	"	"					"	"	"				OUT	"	CLR to QH	"	"	"
"	t_{PHL2}	"	180	"	"	OUT				"	"	"	OUT				"	CLR to QA	"	60	ns
"	"	"	181	"	"		OUT			"	"	"					"	CLR to QB	"	"	"
"	"	"	182	"	"			OUT		"	"	"					"	CLR to QC	"	"	"
"	"	"	183	"	"				OUT	"	"	"					"	CLR to QD	"	"	"
"	"	"	184	"	"					"	"	"	OUT				"	CLR to QE	"	"	"
"	"	"	185	"	"					"	"	"		OUT			"	CLR to QF	"	"	"
"	"	"	186	"	"					"	"	"			OUT		"	CLR to QG	"	"	"
"	"	"	187	"	"					"	"	"				OUT	"	CLR to QH	"	"	"
10	f_{MAX}	(Fig 5)	188	G	G					"	"	"				OUT	"	QH	12		MHz
T_C = 125°C	t_{PHL1}	3003	189	E, G	E, G	OUT				"	"	"					"	CLR to QA	10	110	ns
"	"	(Fig 5)	190	"	"		OUT			"	"	"					"	CLR to QB	"	"	"
"	"	"	191	"	"			OUT		"	"	"					"	CLR to QC	"	"	"
"	"	"	192	"	"				OUT	"	"	"					"	CLR to QD	"	"	"
"	"	"	193	"	"					"	"	"	OUT				"	CLR to QE	"	"	"
"	"	"	194	"	"					"	"	"		OUT			"	CLR to QF	"	"	"
"	"	"	195	"	"					"	"	"			OUT		"	CLR to QG	"	"	"
"	"	"	196	"	"					"	"	"				OUT	"	CLR to QH	"	"	"
"	t_{PLH2}	"	197	G	G	OUT				"	"	"					"	CLK to QA	"	"	"
"	"	"	198	"	"		OUT			"	"	"					"	CLK to QB	"	"	"
"	"	"	199	"	"			OUT		"	"	"					"	CLK to QC	"	"	"
"	"	"	200	"	"				OUT	"	"	"					"	CLK to QD	"	80	"
"	"	"	201	"	"					"	"	"	OUT				"	CLK to QE	"	"	"
"	"	"	202	"	"					"	"	"		OUT			"	CLK to QF	"	"	"
"	"	"	203	"	"					"	"	"			OUT		"	CLK to QG	"	"	"
"	"	"	204	"	"					"	"	"				OUT	"	CLK to QH	"	"	"
"	t_{PHL2}	"	205	"	"	OUT				"	"	"					"	CLK to QA	"	100	"
"	"	"	206	"	"		OUT			"	"	"					"	CLK to QB	"	"	"
"	"	"	207	"	"			OUT		"	"	"					"	CLK to QC	"	"	"
"	"	"	208	"	"				OUT	"	"	"					"	CLK to QD	"	"	"
"	"	"	209	"	"					"	"	"	OUT				"	CLK to QE	"	"	"
"	"	"	210	"	"					"	"	"		OUT			"	CLK to QF	"	"	"
"	"	"	211	"	"					"	"	"			OUT		"	CLK to QG	"	"	"
"	"	"	212	"	"					"	"	"				OUT	"	CLK to QH	"	"	"
11	Same tests, terminal conditions and limits as for subgroup 10, except T_C = -55°C.																				

NOTES: C = Clock pulse, see figure 5.
D = Momentary ground then 4.5 V to clear register before start of test.
E = Outputs are set to high level prior to measurement of t_{PHL} from clear.
F = Input A from figure 5.
G = Input B from figure 5.
H = Input C from figure 5.

1/ Output voltages shall be either: (a) H = 2.4 V, minimum and L = 0.4 V, maximum when using a high speed checker double checker; or (b) H ≥ 1.5 V and L < 1.5 V when using a high speed checker single comparator.

2/ Only a summary of attributes data is required.

3/ Inputs: A = 2.0 V and B = 0.8 V.

TABLE III. Group A inspection for device type 03.
Terminal conditions (pins not designated are open)

Subgroup	Symbol	MIL-STD-883 method	Cases E,F Test No.	1 $\overline{MR}$	2 $\overline{Q}$ 7	3 2Q7	4 2DS	5 2D1	6 2D0	7 2CP	8 GND	9 CP COM	10 1CP	11 1D0	12 1D1	13 1DS	14 1Q7	15 1 $\overline{Q}$ 7	16 V_{CC}	Meas. terminal	Test limits Min	Max	Unit
1	I_{IL1}	3009	1	0.3 V[2]															5.5 V	$\overline{MR}$	-0.12	-0.4	mA
T_C= 25°C	"	"	2								"			0.3 V					"	1D0	"	"	"
"	"	"	3								"				0.3 V				"	1D1	"	"	"
"	"	"	4						0.3 V	GND	"								"	2D0	"	"	"
"	"	"	5					0.3 V			"								"	2D1	"	"	"
"	I_{IL2}	"	6								"		0.3 V						"	1CP	-0.25	-0.6	"
"	I_{IL2}	"	7							0.3 V	"								"	2 CP	-0.25	-0.6	"
"	I_{IL3}	"	8								"					0.3 V			"	1DS	-0.24	-0.8	"
"	I_{IL3}	"	9				0.3 V				"								"	2DS	-0.24	-0.8	"
"	I_{IL4}	"	10								"	0.3 V							"	CP COM	-0.36	-1.2	"
"	I_{IH1}	3010	11	2.4 V			GND	GND	GND	GND	"	GND	GND	GND	GND	GND			"	$\overline{MR}$			µA
"	"	"	12	GND			"	"	"	"	"	"	"	2.4 V	GND	"			"	1D0		"	"
"	"	"	13	"			"	"	"	"	"	"	"	GND	2.4 V	"			"	1D1		"	"
"	"	"	14	"			"	"	2.4 V	"	"	"	"	"	GND	"			"	2D0	20	"	"
"	"	"	15	"			"	2.4 V	GND	"	"	"	"	"	"	"			"	2D1		"	"
"	I_{IH2}	"	16	"			"	GND	"	"	"	"	2.4 V	"	"	"			"	1CP			"
"	I_{IH2}	"	17	"			"	"	"	2.4 V	"	"	GND	"	"	"			"	2CP		30	"
"	I_{IH3}	"	18	"			"	"	"	GND	"	"	"	"	"	2.4 V			"	1DS			"
"	I_{IH3}	"	19	"			2.4 V	"	"	"	"	"	"	"	"	GND			"	2DS	30	40	"
"	I_{IH4}	"	20	"			GND	"	"	"	"	2.4 V	"	"	"	"			"	CP COM		60	"
"	I_{IH5}	"	21	5.5 V			"	"	"	"	"	GND	"	"	"	"			"	$\overline{MR}$	40	100	µA
"	"	"	22	GND			"	"	"	"	"	"	"	5.5 V	"	"			"	1D0		"	"
"	"	"	23	"			"	"	"	"	"	"	"	GND	5.5 V	"			"	1D1		"	"
"	"	"	24	"			"	"	5.5 V	"	"	"	"	"	GND	"			"	2D0		"	"
"	"	"	25	"			"	5.5 V	GND	"	"	"	"	"	"	"			"	2D1		"	"
"	"	"	26	"			"	GND	"	"	"	"	5.5 V	"	"	"			"	1CP		"	"
"	"	"	27	"			"	"	"	5.5 V	"	"	GND	"	"	"			"	2CP		"	"
"	"	"	28	"			"	"	"	GND	"	"	"	"	"	5.5 V			"	1DS		"	"
"	"	"	29	"			5.5 V	"	"	"	"	"	"	"	"	GND			"	2DS		"	"
"	"	"	30	"			GND	"	"	"	"	5.5 V	"	"	"	GND			"	CP COM		"	"
"	I_{OS}	3011	31								"			4.5 V	4.5 V	4.5 V	GND		"	1Q7	-2.5	-25	mA
"	I_{OS}	3011	32								"		A	4.5 V	4.5 V	4.5 V		GND	"	1Q7	-2.5	-25	mA

A

See footnote at end of table.

TABLE III. Group A inspection for device type 03 – Continued.
Terminal conditions (pins not designated are open)

Subgroup	Symbol	MIL-STD-883 method	Cases E,F Test No.	1 $\overline{MR}$	2 $\overline{Q}$ 7	3 2Q7	4 2DS	5 2D1	6 2D0	7 2CP	8 GND	9 CP COM	10 1CP	11 1D0	12 1D1	13 1DS	14 1Q7	15 1 $\overline{Q}$ 7	16 V_{CC}	Meas. terminal	Test limits Min	Max	Unit
1	I_{OS}	3011	33	2		GND	4.5 V	4.5 V	4.5 V	A	GND								5.5 V	2Q7	-2.5	-25	mA
T_C= 25°C	I_{OS}	3011	34		GND		4.5 V	4.5 V	4.5 V	A	"								"	2Q7	-2.5	-25	mA
"	I_{CC}	3005	35	A			GND	GND	GND		"				GND	GND			"	V_{CC}		25.3	mA
"	V_{OH}	3006	36	2.0 V							"	GND	A	2.0 V	2.0 V	0.7 V	-0.32 mA		4.5 V	1Q7	2.4		
"	"	"	37	2.0 V							"	GND	A	2.0 V	2.0 V	2.0 V	-0.32 mA		"	1Q7	"		"
"	"	"	38	2.0 V							"	A	GND	2.0 V	2.0 V	2.0 V	-0.32 mA	-0.32 mA	"	1Q7	"		"
"	"	"	39	0.7 V							"	A	GND	2.0 V	2.0 V	2.0 V		"	"	1Q7	"		"
"	"	"	40	2.0 V							"	GND	A	0.7 V	2.0 V	0.7 V		"	"	1Q7	"	V	"
"	"	"	41	"							"	GND	A	2.0 V	0.7 V	2.0 V		"	"	1Q7	"		"
"	"	"	42	"							"	A	GND	2.0 V	0.7 V	2.0 V		"	"	1Q7	"		"
"	"	"	43	"		-0.32 mA	0.7 V	2.0 V	2.0 V	A	"	GND							"	2Q7	"		"
"	"	"	44	"			2.0 V	2.0 V	2.0 V	A	"	GND							"	2Q7	"		"
"	"	"	45	"			2.0 V	2.0 V	2.0 V	GND	"	A							"	2Q7	"		"
"	"	"	46	0.7 V	-0.32 mA		2.0 V	2.0 V	2.0 V	A	"	GND							"	2Q7	"		"
"	"	"	47	2.0 V			0.7 V	2.0 V	0.7 V	A	"	GND							"	2Q7	"		"
"	"	"	48	"			2.0 V	0.7 V	2.0 V	A	"	GND							"	2Q7	"		"
"	"	"	49	"			2.0 V	0.7 V	2.0 V	GND	"	A							"	2Q7	"		"
"	V_{OL}	3007	50	"							"	GND	A	0.7 V	2.0 V	0.7 V	3.2 mA		"	1Q7			"
"	"	"	51	"							"	GND	A	2.0 V	0.7 V	2.0 V	3.2 mA		"	1Q7		"	"
"	"	"	52	"							"	A	GND	2.0 V	2.0 V	0.7 V		3.2 mA	"	1Q7		"	"
"	"	"	53	"							"	GND	A	2.0 V	2.0 V	2.0 V		3.2 mA	"	1Q7	0.3	"	"
"	"	"	54	0.7 V							"	GND	A	2.0 V	2.0 V	2.0 V	3.2 mA		"	1Q7		"	"
"	"	"	55	2.0 V		3.2 mA	0.7 V	2.0 V	0.7 V	A	"	GND							"	2Q7		"	"
"	"	"	56	"		3.2 mA	2.0 V	0.7 V	2.0 V	A	"	GND							"	2Q7		"	"
"	"	"	57	"		3.2 mA				GND	"	A							"	2Q7		"	"
"	"	"	58	"	3.2 mA		0.7 V	2.0 V	2.0 V	A	"	GND							"	2Q7		"	"
"	"	"	59	2.0 V	3.2 mA		2.0 V	2.0 V	2.0 V	A	"	GND							"	2Q7		"	"
"	"	"	60	2.0 V	3.2 mA		2.0 V	2.0 V	2.0 V	GND	"	A							"	2Q7		"	"
2	Same tests, terminal conditions and limits as for subgroup 1, except T_C = 125°C.																						
3	Same tests, terminal conditions and limits as for subgroup 1, except T_C = -55°C.																						
9	t_{PLH1}	3003	61	2.0 V							GND	GND	IN						5.0 V	1CP to 1Q7	11	45	ns
T_C= 25°C	t_{PLH1}	(Fig 6) "	62	2.0 V		OUT				IN	GND	GND				OUT			5.0 V	2CP to 2Q7	11	45	ns

See footnote at end of table.

TABLE III. Group A inspection for device type 03 – Continued.
Terminal conditions (pins not designated are open)

Subgroup	Symbol	MIL-STD-883 method	Cases E,F Test No.	1 $\overline{MR}$	2 $\overline{Q}$ 7	3 2Q7	4 2DS	5 2D1	6 2D0	7 2CP	8 GND	9 CP COM	10 1CP	11 1D0	12 1D1	13 1DS	14 1Q7	15 1 $\overline{Q}$ 7	16 V_{CC}	Meas. terminal	Test limits Min	Max	Unit
9 T_C=25°C	t_{PHL1}	3003 (Fig 6)	63	2.0 V 2							GND	GND	IN				OUT		5.0 V	1CP to 1Q7	20	85	ns
"	"	"	64	2.0 V		OUT				IN	"	"							"	2CP to 2Q7	20	85	"
"	"	"	65	IN							"	"		2.0 V	2.0 V	2.0 V	OUT		"	$\overline{MR}$ to 1Q7	30	110	"
"	"	"	66	IN		OUT	2.0 V	2.0 V	2.0 V		"	"							"	$\overline{MR}$ to 2Q7	30	110	"
"	f_{MAX}	"	67								"	"							"		6	-	MHz
10 T_C=125°C	t_{PLH1}	3003 (Fig 6)	68	2.0 V							"	"	IN				OUT		"	1CP to 1Q7	44	55	ns
"	t_{PLH1}	"	69	2.0 V		OUT				IN	"	"							"	2CP to 2Q7	44	55	"
"	t_{PHL1}	"	70	2.0 V							"	"	IN				OUT		"	1CP to 1Q7	25	100	"
"	t_{PHL1}	"	71	2.0 V		OUT				IN	"	"							"	2CP to 2Q7	25	100	"
"	t_{PHL2}	"	72	IN							"	"		2.0 V	2.0 V	2.0 V	OUT		"	$\overline{MR}$ to 1Q7	32	125	"
"	t_{PHL3}	"	73	IN		OUT	2.0 V	2.0 V	2.0 V		"	"							"	$\overline{MR}$ to 2Q7	32	125	"
"	f_{MAX}	"	74								"	"							"		6		MHz
11 T_C=-55°C	t_{PLH1}	"	75	2.0 V							"	"	IN				OUT		"	1CP to 1Q7	44	55	ns
"	t_{PLH1}	"	76	2.0 V		OUT				IN	"	"					OUT		"	2CP to 2Q7	44	55	"
"	t_{PHL1}	"	77	2.0 V							"	"	IN				OUT		"	1CP to 1Q7	25	100	"
"	t_{PHL1}	"	78	2.0 V		OUT				IN	"	"								2CP to 2Q7	25	100	"

See footnote at end of table.

TABLE III. Group A inspection for device type 03 – Continued.
Terminal conditions (pins not designated are open)

Subgroup	Symbol	MIL-STD-883 method	Cases E,F	1	2	3	4	5	6	7	8	9	10	11	12	13	14	15	16	Meas. terminal	Test limits		
			Test No.	$\overline{MR}$	$\overline{Q}$ 7	2Q7	2DS	2D1	2D0	2CP	GND	CP COM	1CP	1D0	1D1	1DS	1Q7	1 $\overline{Q}$ 7	V_{CC}		Min	Max	Unit
11 T_C=-55°C	t_{PHL2}	3003 (Fig 6)	79	IN [2]							GND	GND		2.0 V	2.0 V	2.0 V	OUT		5.0 V	$\overline{MR}$ to 1Q7	32	125	ns
"	t_{PHL3}	"	80	IN		OUT	2.0 V	2.0 V	2.0 V		GND	GND							5.0 V	$\overline{MR}$ to 2Q7	32	125	ns
"	f_{MAX}	"	81								GND	GND							5.0 V		6	--	MHz

NOTE:
A = Clock pulse (see figure 6).

TABLE III. Group A inspection for device type 04.
Terminal conditions (pins not designated are open)

Subgroup	Symbol	MIL-STD-883 method	Cases E,F Test No.	1 $\overline{MR}$	2 J	3 $\overline{K}$	4 P0	5 P1	6 P2	7 P3	8 GND	9 $\overline{PE}$	10 CP	11 $\overline{Q}$ 3	12 Q3	13 Q2	14 Q1	15 Q0	16 V_{CC}	Meas. terminal	Test limits Min	Max	Unit
1	V_{OL}	3007	1	CP			0.7 V				GND	0.7 V	2.0 V					3.2 mA	4.5 V	Q0			V
T_C= 25°C	"	"	2	"				0.7 V			"	"	"				3.2 mA		"	Q1		"	"
"	"	"	3	"					0.7 V		"	"	"			3.2 mA			"	Q2		"	"
"	"	"	4	"						0.7 V	"	"	"		3.2 mA				"	Q3	0.3	"	"
"	"	"	5	2.0 V						2.0 V	"	"	CP	3.2 mA					"	Q3		"	"
"	V_{OH}	3006	6	"			2.0 V				"	"	"					-.32 mA		Q0	2.4		
"	"	"	7	"				2.0 V			"	"	"				-.32 mA			Q1	"		"
"	"	"	8	"					2.0 V		"	"	"			-.32 mA				Q2	"		"
"	"	"	9	"						2.0 V	"	"	"		-.32 mA					Q3	"		"
"	"	"	10	"						0.7 V	"	"	"	-.32 mA						Q3	"	"	"
"	I_{IH1}	3010	11	2.4 V							"	"							5.5 V	$\overline{MR}$			µA
"	"	"	12		2.4 V						"	"							"	J		"	"
"	"	"	13			2.4 V					"	"							"	K		"	"
"	"	"	14				2.4 V				"								"	P0	20	"	"
"	"	"	15					2.4 V			"								"	P1		"	"
"	"	"	16						2.4 V		"								"	P2		"	"
"	"	"	17							2.4 V	"								"	P3		"	"
"	I_{IH2}	"	18								"		2.4 V						"	CP		40	"
"	I_{IH3}	"	19								"	2.4 V							"	$\overline{PE}$		46	"
"	I_{IH4}	"	20	5.5 V							"								"	$\overline{MR}$			"
"	"	"	21		5.5 V						"								"	J		"	"
"	"	"	22			5.5 V					"								"	K		"	"
"	"	"	23				5.5 V				"								"	P0	100	"	"
"	"	"	24					5.5 V			"								"	P1		"	"
"	"	"	25						5.5 V		"								"	P2		"	"
"	"	"	26							5.5 V	"								"	P3		"	"
"	"	"	27								"		5.5 V						"	CP		"	"
"	"	"	28								"	5.5 V							"	$\overline{PE}$		"	"
"	I_{OS}	3011	29	4.5 V			4.5 V				"	GND	CP					GND	"	Q0	-2.5	-25	mA
"	"	"	30	"				4.5 V			"	"	"				GND		"	Q1	"	"	"
"	"	"	31	"					4.5 V		"	"	"			GND			"	Q2	"	"	"
"	"	"	32	"						4.5 V	"	"	"		GND				"	Q3	"	"	"
"	"	"	33	"						GND	"	"	"	GND					"	Q3	"	"	"
"	I_{IL1}	3009	34	GND	0.3 V						"	4.5 V							"	J	-.12	-.4	mA
"	"	"	35	CP	4.5 V	0.3 V					"	4.5 V							"	K	"	"	"
"	"	"	36	0.3 V							"								"	$\overline{MR}$	"	"	"

See footnotes at end of table.

TABLE III. Group A inspection for device type 04 – Continued.
Terminal conditions (pins not designated are open)

Subgroup	Symbol	MIL-STD-883 method	Cases E,F Test No.	1 $\overline{MR}$	2 J	3 $\overline{K}$	4 P0	5 P1	6 P2	7 P3	8 GND	9 $\overline{PE}$	10 CP	11 $\overline{Q}$ 3	12 Q3	13 Q2	14 Q1	15 Q0	16 V_{CC}	Meas. terminal	Test limits Min	Max	Unit
1	I_{IL1}	3009	37				0.3 V				GND	GND							5.5 V	P0	-.12	-.4	mA
T_C= 25°C	"	"	38					0.3 V			"	"							"	P1	"	"	"
"	"	"	39						0.3 V		"	"							"	P2	"	"	"
"	"	"	40							0.3 V	"	"							"	P3	"	"	"
"	I_{IL2}	"	41								"	"	0.3 V						"	CP	-.35	-.8	mA
"	I_{IL3}	"	42								"	0.3 V							"	$\overline{PE}$	-.36	-.92	mA
"	V_{IC}			-10mA							"								4.5 V	$\overline{MR}$		-1.5	V
"	"		44		-10mA						"								"	J		"	"
"	"		45			-10mA					"								"	K		"	"
"	"		46				-10mA				"								"	P0		"	"
"	V_{IC}	43						-10mA			"								"	P1			"
"	"		48						-10mA		"								"	P2		"	"
"	"		49							-10mA	"								"	P3		"	"
	I_{CC}	3005 47	50	CP							"	4.5 V	4.5 V						5.5 V	V_{CC}	"	23	mA
2	Same tests, terminal conditions and limits as for subgroup 1, except T_C = 125°C and VIC tests are omitted.																						
3	Same tests, terminal conditions and limits as for subgroup 1, except T_C = -55°C and VIC tests are omitted.																						
7	Truth			B	B	B	5.5 V	5.5 V	5.5 V	5.5 V	GND	5.5 V	A				L	L	5.5 V				
T_C= 25°C	table		52	A	B	"	"	"	"	"	"	"	B				"	"	"				
"	tests		53	"	B	"	"	"	"	"	"	"	A				"	"	"				
"	"		54	"	A	"	"	"	"	"	"	"	B				"	"	"				
"	"	51	55	"	A	"	"	"	"	"	"	"	A				"	H	"				
"	"		56	"	B	"	"	"	"	"	"	"	B				"	H	"				
"	"		57	"	B	"	"	"	"	"	"	"	A				H	L	"				
"	"		58	"	A	A	"	"	"	"	"	"	B				H	L	"				
"	"		59	"	"	"	"	"	"	"	"	"	A				L	H	"				
"	"		60	"	"	"	"	"	"	"	"	"	B				L	"	"				
"	"		61	"	"	"	"	"	"	"	"	"	A				H	"	"				
"	"		62	"	B	"	"	"	"	"	"	"	B				"	"	"				
"	"		63	"	B	"	"	"	"	"	"	"	A				"	"	"				
"	"		64	"	A	B	"	"	"	"	"	"	B				"	"	"		See		
"	"		65	"	"	"	"	"	"	"	"	"	A				"	L	"		note 1		
"	"		66	B	"	"	"	"	"	"	"	"	A				L	"	"				
"	"		67	B	GND	5.5 V	B	B	"	"	"	B	A				L	"	"				
"	"		68	A	"	"	"	A	"	"	"	B	B				L	"	"				
"	"		69	"	"	"	"	"	"	"	"	A	A				H	"	"				
"	"		70	"	"	"	"	"	"	"	"	A	B				H	"	"				
"	"		71	"	"	"	"	"	"	"	"	B	A				L	"	"				
"	"		72	"	"	"	A	B	"	"	"	"	B				"	"	"				
"	"		73	"	"	"	A	B	"	"	"	"	A				"	H	"				
"	"		74	"	"	"	B	B	"	"	"	"	B				"	H	"				
"	"		75	"	"	"	B	B	"	"	"	"	A				"	L	"				
"	"		76	"	"	"	A	A	"	"	"	"	B				"	L	"				
"	"		77	"	"	"	"	"	"	"	"	A	A				H	H	"				
"	"		78	"	"	"	"	"	"	"	"	A	B				H	H	"				

See footnotes at end of table.

TABLE III. Group A inspection for device type 04 – Continued.

Terminal conditions (pins not designated are open)

Subgroup	Symbol	MIL-STD-883 method	Cases E,F Test No.	1 $\overline{MR}$	2 J	3 $\overline{K}$	4 P0	5 P1	6 P2	7 P3	8 GND	9 $\overline{PE}$	10 CP	11 $\overline{Q}$ 3	12 Q3	13 Q2	14 Q1	15 Q0	16 VCC	Meas. terminal	Test limits Min	Test limits Max	Test limits Unit
7	Truth			B	GND	5.5 V	A	A	5.5 V	5.5 V	GND	B	B				L	L	5.5 V				
T_C= 25°C	table		80	A	"	"	"	"	"	"	"	B	B				L	L	"				
"	tests		81	A	"	"	"	"	"	"	"	A	A				H	H	"				
"	"	79	82	B	"	"	"	"	"	"	"	B	A				L	L	"				
"	"		83	B	B	B	B	B	"	"	"	GND	A				L	L	"				
"	"		84	A	B	B	A	A	"	"	"	"	B				L	L	"				
"	"		85	"	A	A	"	"	"	"	"	"	A				H	H	"				
"	"		86	"	"	"	"	"	"	"	"	"	B				"	H	"				
"	"		87	"	"	"	"	"	"	"	"	"	A				"	H	"				
"	"		88	"	"	"	B	"	"	"	"	"	B				"	H	"				
"	"		89	"	B	"	"	"	"	"	"	"	A				"	L	"				
"	"		90	"	"	"	"	"	"	"	"	"	B				"	L	"				
"	"		91	"	"	"	"	"	"	"	"	"	A				"	L	"				
"	"		92	"	"	"	A	B	"	"	"	"	B				"	L	"				
"	"		93	"	A	B	"	"	"	"	"	"	A				L	H	"				
"	"		94	"	"	"	"	"	"	"	"	"	B				"	H	"				
"	"		95	"	"	"	"	"	"	"	"	"	A				"	H	"				
"	"		96	"	"	"	"	"	"	"	"	"	B				"	H	"				
"	"		97	"	"	"	"	"	"	"	"	"	A				"	H	"				
"	"		98	B	B	B	"	"	"	"	"	"	A				"	L	"				
"	"		99	B			5.5 V	5.5 V	B	B	"	"	A		L	L	"	"	"				
"	"		100	A			"	"	A	A	"	"	B		L	L	"	"	"				
"	"		101	"			"	"	A	"	"	"	A		H	H	"	"	"				
"	"		102	"			"	"	B	"	"	"	B		H	H	"	"	"				
"	"		103	"			"	"	B	B	"	"	A		H	L	"	"	"				
"	"		104	"			"	"	A	"	"	"	B		H	L	"	"	"				
"	"		105	"			"	"	A	"	"	"	A		L	H	"	"	"				
"	"		106	"			"	"	B	"	"	"	B		"	H	"	"	"				
"	"		107	"			"	"	B	"	"	"	A		"	L	"	"	"				
"	"		108	"			"	"	A	"	"	"	B		"	L	"	"	"				
"	"		109	"			"	"	A	"	"	"	A		"	H	"	"	"				
"	"		110	"			"	"	B	A	"	"	B		"	H	"	"	"				
"	"		111	"			"	"	B	"	"	"	A		H	L	"	"	"				
"	"		112	"			"	"	A	"	"	"	B		H	L	"	"	"				
"	"		113	"			"	"	A	"	"	"	A		H	H	"	"	"				
"	"		114	B			"	"	A	"	"	"	A		L	L	"	"	"				
"	"		115	B	GND	5.5 V	A	B	5.5 V	5.5 V	"	B	A		"	L	"	"	"				
"	"		116	A	"	"	"	"	"	"	"	B	B		"	L	"	"	"				
"	"		117	"	"	"	"	"	"	"	"	B	A		"	H	"	"	"				
"	"		118	"	"	"	"	"	"	"	"	A	B		"	H	"	"	"				
"	"		119	"	"	"	"	A	"	"	"	A	A		H	H	"	"	"				
"	"		120	"	"	"	B	"	"	"	"	B	B		"	"	H	"	"				
"	"		121	"	"	"	"	"	"	"	"	B	A		"	"	H	"	"				
"	"		122	"	"	"	"	"	"	"	"	A	B		"	"	H	"	"				
"	"		123	"	"	"	"	B	"	"	"	A	A		"	"	L	"	"				
"	"		124	"	"	"	A	"	"	"	"	B	B		"	"	"	"	"				
"	"		125	"	"	"	"	"	"	"	"	B	A		"	"	"	"	"				
"	"		126	"	"	"	"	"	"	"	"	A	B		"	"	"	"	"				
"	"		127	"	"	"	"	A	"	"	"	"	A		"	"	H	"	"				
"	"		128	B	"	"	"	B	"	"	"	"	"		"	"	L	"	"				
"	"		129	"	"	"	"	"	"	"	"	"	"		"	"	L	"	"				
"	"		130	"	"	"	"	"	"	"	"	"	"		"	"	L	"	"				
"	"		131	"	"	"	"	A	"	"	"	B	"		"	L	"	"	"				
"	"		132	A	"	"	"	"	"	"	"	"	B		"	"	"	"	"				
"	"		133	"	"	"	"	"	"	"	"	"	A		"	"	H	"	"				
"	"		134	"	"	"	"	"	"	"	"	A	B		"	"	H	"	"				
"	"		135	"	"	"	"	"	"	"	"	A	A		"	H	H	"	"				

See footnotes at end of table.

TABLE III. Group A inspection for device type 04 – Continued.

Terminal conditions (pins not designated are open)

Subgroup	Symbol	MIL-STD-883 method	Cases E,F Test No.	1 $\overline{MR}$	2 J	3 $\overline{K}$	4 P0	5 P1	6 P2	7 P3	8 GND	9 $\overline{PE}$	10 CP	11 $\overline{Q}$ 3	12 Q3	13 Q2	14 Q1	15 Q0	16 V_{CC}	Meas. terminal	Test limits Min	Test limits Max	Test limits Unit
7	Truth			A	GND	5.5 V	B	B		5.5 V	GND	B	B			H	H		5.5 V				
T_C= 25°C	table		137	"	"	"	"	"		"	"	B	A			H	L		"				
"	tests		138	"	"	"	"	"		"	"	A	B			H	L		"				
"	"	136	139	"	"	"	"	"		"	"	A	A			L	L		"				
"	"		140	"	"	"	A	A		"	"	B	B			"	L		"				
"	"		141	"	"	"	"	"		"	"	B	A			"	H		"				
"	"		142	"	"	"	"	"		"	"	A	B			"	H		"				
"	"		143	"	"	"	"	"	A	"	"	"	A			H	H		"				
"	"		144	B	"	"	"	"	B	"	"	"	"			L	L		"				
"	"		145	"	"	"	"	"	"	"	"	"	"			"	"		"				
"	"		146	"	"	"	"	"	"	"	"	"	"			"	"		"				
"	"		147	"	"	"	"	"	A	B	"	B	"	H	L				"				
"	"		148	A	"	"	"	"	"	"	"	B	B	"	"				"				
"	"		149	"	"	"	"	"	"	"	"	B	A	"	"				"				
"	"		150	"	"	"	"	"	"	"	"	A	B	"	"				"				
"	"		151	"	"	"	"	"	"	A	"	A	A	L	H				"				
"	"		152	"	"	"	B	B	B	"	"	B	B	"	"				"				
"	"		153	"	"	"	"	"	"	"	"	B	A	"	"				"				
"	"		154	"	"	"	"	"	"	"	"	A	B	"	"				"				
"	"		155	"	"	"	"	"	"	B	"	A	A	H	L				"				
"	"		156	"	"	"	A	A	A	"	"	B	B	"	"				"				
"	"		157	"	"	"	"	"	"	"	"	B	A	"	"				"				
"	"		158	"	"	"	"	"	"	"	"	A	B	"	"				"				
"	"		159	"	"	"	"	"	"	A	"	"	A	L	H				"				
"	"		160	B	"	"	"	"	"	B	"	"	"	H	L				"				
"	"		161	"	"	"	"	"	"	"	"	"	"	"	"				"				
"	"		162	"	"	"	"	"	"	"	"	"	"	"	"				"				
"	"		163	"	A	A					"	5.5 V	"						"				
"	"		164	A	A	A					"	"	"						"		See		
"	"		165	"	B	A					"	"	"						"		note 1		
"	"		166	"	B	B					"	"	"						"				
"	"		167	"	A	B					"	"	"					L	"				
"	"		168	"	A	B					"	"	"					"	"				
"	"		169	"	B	A					"	"	"					"	"				
"	"		170	"	A	B					"	"	"					"	"				
"	"		171	"	"	A					"	"	B					"	"				
"	"		172	"	"	A					"	"	A					H	"				
"	"		173	"	"	B					"	"	"					"	"				
"	"		174	"	B	B					"	"	"					"	"				
"	"		175	"	B	A					"	"	"					"	"				
"	"		176	"	A	A					"	"	"					"	"				
"	"		177	"	B	B					"	"	"					"	"				
"	"		178	"	A	A					"	"	"					"	"				
"	"		179	B			A	A			"	GND	"				L	L	"				
"	"		180	A			A	A			"	"	"				"	"	"				
"	"		181	"			B	A			"	"	"				"	"	"				
"	"		182	"			B	B			"	"	"				"	"	"				
"	"		183	"			A	B			"	"	"				"	"	"				
"	"		184	"			A	A			"	"	"				"	"	"				
"	"		185	"			B	B			"	"	"				"	"	"				
"	"		186	"			A	A			"	"	"				"	"	"				
"	"		187	"			"	A			"	"	B				"	"	"				
"	"		188	"			"	A			"	"	A				H	H	"				
"	"		189	"			"	B			"	"	"				"	"	"				
"	"		190	"			B	B			"	"	"				"	"	"				
"	"		191	"			B	A			"	"	"				"	"	"				
"	"		192	"			A	A			"	"	"				"	"	"				

See footnotes at end of table.

TABLE III. Group A inspection for device type 04 – Continued.
Terminal conditions (pins not designated are open)

Subgroup	Symbol	MIL-STD-883 method	Cases E,F Test No.	1 $\overline{MR}$	2 J	3 $\overline{K}$	4 P0	5 P1	6 P2	7 P3	8 GND	9 $\overline{PE}$	10 CP	11 $\overline{Q}$ 3	12 Q3	13 Q2	14 Q1	15 Q0	16 V_{CC}	Meas. terminal	Test limits Min	Max	Unit
7	Truth			A			B	B			GND	GND	A				H	H	5.5 V				
T_C= 25°C	table		194	A			A	A			"	"	"				H	H	"				
"	tests		195	B					A	A	"	"	"						"				
"	"	193	196	A					A	A	"	"	"		L	L			"				
"	"		197	"					B	A	"	"	"		"	"			"				
"	"		198	"					B	B	"	"	"		"	"			"				
"	"		199	"					A	B	"	"	"		"	"			"				
"	"		200	"					A	A	"	"	"		"	"			"				
"	"		201	"					B	B	"	"	"		"	"			"			See	
"	"		202	"					A	A	"	"	"		"	"			"			note 1	
"	"		203	"					"	A	"	"	B		"	"			"				
"	"		204	"					"	A	"	"	A		H	H			"				
"	"		205	"					"	B	"	"	"		"	"			"				
"	"		206	"					B	B	"	"	"		"	"			"				
"	"		207	"					B	A	"	"	"		"	"			"				
"	"		208	"					A	A	"	"	"		"	"			"				
"	"		209	"					B	B	"	"	"		"	"			"				
"	"		210	"					A	A	"	"	"		"	"			"				
8	Same tests, terminal conditions and limits as subgroup 7, except T_C = 125°C and -55°C.																						
9	t_{PLH1}	3003	211	2.4 V	2.4 V	GND	2.4 V	2.4 V	2.4 V	2.4 V	GND	2.4 V	IN					OUT	5.0 V	Q0	20	60	ns
T_C= 25°C	"	(Fig 7)	212	"	"	"	"	"	"	"	"	"	"				OUT		"	Q1	"	"	"
"	"	"	213	"	"	"	"	"	"	"	"	"	"			OUT			"	Q2	"	"	"
"	"	"	214	"	"	"	"	"	"	"	"	"	"		OUT				"	Q3	"	"	"
"	"	"	215	"	"	"	"	"	"	"	"	"	"	OUT					"	$\overline{Q3}$	"	"	"
"	t_{PHL1}	"	216	"	"	"	"	"	"	"	"	"	"	OUT					"	$\overline{Q3}$	25	65	"
"	"	"	217	"	"	"	"	"	"	"	"	"	"		OUT				"	Q3	"	"	"
"	"	"	218	"	"	"	"	"	"	"	"	"	"			OUT			"	Q2	"	"	"
"	"	"	219	"	"	"	"	"	"	"	"	"	"				OUT		"	Q1	"	"	"
"	"	"	220	"	"	"	"	"	"	"	"	"	"					OUT	"	Q0	"	"	"
"	t_{PHL2}	"	221	IN	"	"	"	"	"	"	"	"	2.4 V					OUT	"	Q0	"	"	"
"	"	"	222	"	"	"	"	"	"	"	"	"	"				OUT		"	Q1	"	"	"
"	"	"	223	"	"	"	"	"	"	"	"	"	"			OUT			"	Q2	"	"	"
"	"	"	224	"	"	"	"	"	"	"	"	"	"		OUT				"	Q3	"	"	"
"	t_{PHL3}	"	225	"	"	"	"	"	"	"	"	"	"	OUT					"	$\overline{Q3}$	30	90	"
	f_{SR}	Fig 7	226	2.4 V	"	"	"	"	"	"	"	"	IN						"	Q0	8	25	MHz
10	t_{PLH1}	3003	227	2.4 V	2.4 V	GND	2.4 V	2.4 V	2.4 V	2.4 V	GND	2.4 V	IN					OUT	5.0 V	Q0	25	100	ns
T_C=125°C	"	(Fig 7)	228	"	"	"	"	"	"	"	"	"	"				OUT		"	Q1	"	"	"
"	"	"	229	"	"	"	"	"	"	"	"	"	"			OUT			"	Q2	"	"	"
"	"	"	230	"	"	"	"	"	"	"	"	"	"		OUT				"	Q3	"	"	"
"	"	"	231	"	"	"	"	"	"	"	"	"	"	OUT					"	$\overline{Q3}$	"	"	"
"	t_{PHL1}	"	232	"	"	"	"	"	"	"	"	"	"	OUT					"	$\overline{Q3}$	25	100	ns

See footnotes at end of table.

TABLE III. Group A inspection for device type 04 – Continued.
Terminal conditions (pins not designated are open)

Subgroup	Symbol	MIL-STD-883 method	Cases E,F Test No.	1 $\overline{MR}$	2 J	3 $\overline{K}$	4 P0	5 P1	6 P2	7 P3	8 GND	9 $\overline{PE}$	10 CP	11 $\overline{Q}$ 3	12 Q3	13 Q2	14 Q1	15 Q0	16 V_{CC}	Meas. terminal	Test limits Min	Max	Unit
10	t_{PHL1}	3003	233	2.4 V	2.4 V	GND	2.4 V	2.4 V	2.4 V	2.4 V	GND	2.4 V	IN					OUT	5.0 V	Q3	25	100	ns
T_C=125°C	"	(Fig 7)	234	"	"	"	"	"	"	"	"	"	"			OUT			"	Q2	"	"	"
"	"	"	235	"	"	"	"	"	"	"	"	"	"				OUT		"	Q1	"	"	"
"	"	"	236	"	"	"	"	"	"	"	"	"	"	OUT				OUT	"	Q0	"	"	"
"	t_{PHL2}	"	237	IN	"	"	"	"	"	"	"	"	2.4 V					OUT	"	Q0	30	100	"
"	"	"	238	"	"	"	"	"	"	"	"	"	"				OUT		"	Q1	"	"	"
"	"	"	239	"	"	"	"	"	"	"	"	"	"			OUT			"	Q2	"	"	"
"	"	"	240	"	"	"	"	"	"	"	"	"	"		OUT				"	Q3	"	"	"
"	t_{PHL3}	"	241	"	"	"	"	"	"	"	"	"	"	OUT					"	$\overline{Q3}$	35	120	"
"	f_{SR}	Fig 7	242	2.4 V	"	"	"	"	"	"	"	"	IN					OUT	"	Q0	5	25	MHz
11	t_{PLH1}	3003	243	2.4 V	2.4 V	GND	2.4 V	2.4 V	2.4 V	2.4 V	GND	2.4 V	IN						"	Q0	14	65	ns
T_C=-55°C	"	(Fig 7)	244	"	"	"	"	"	"	"	"	"	"				OUT		"	Q1	"	"	"
"	"	"	245	"	"	"	"	"	"	"	"	"	"			OUT			"	Q2	"	"	"
"	"	"	246	"	"	"	"	"	"	"	"	"	"		OUT				"	Q3	"	"	"
"	"	"	247	"	"	"	"	"	"	"	"	"	"	OUT					"	$\overline{Q3}$	"	"	"
"	t_{PHL1}	"	248	"	"	"	"	"	"	"	"	"	"	OUT					"	$\overline{Q3}$	20	70	"
"	"	"	249	"	"	"	"	"	"	"	"	"	"		OUT				"	Q3	"	"	"
"	"	"	250	"	"	"	"	"	"	"	"	"	"			OUT			"	Q2	"	"	"
"	"	"	251	"	"	"	"	"	"	"	"	"	"				OUT		"	Q1	"	"	"
"	"	"	252	"	"	"	"	"	"	"	"	"	"						"	Q0	"	"	"
"	t_{PHL2}	"	253	IN	"	"	"	"	"	"	"	"	2.4 V						"	Q0	"	"	"
"	"	"	254	"	"	"	"	"	"	"	"	"	"				OUT		"	Q1	"	"	"
"	"	"	255	"	"	"	"	"	"	"	"	"	"			OUT			"	Q2	"	"	"
"	"	"	256	"	"	"	"	"	"	"	"	"	"		OUT				"	Q3	"	"	"
"	t_{PHL3}	"	257	"	"	"	"	"	"	"	"	"	"	OUT					"	$\overline{Q3}$	25	95	"
"	f_{SR}	Fig 7	258	2.4 V	"	"	"	"	"	"	"	"	IN						"	Q0	6	25	MHz

NOTES:

1. INPUTS: A = 2.0 V and B = GND.
   OUTPUTS: Output voltage shall be either
   (a) H = 2.4 V minimum and L = 0.4 V maximum when using a high-speed checker double comparator or
   (b) H ≥ 1.5 V and L < 1.5 V when using a high-speed checker single comparator.
2. The term P-XX means that the affected pin is connected to pin XX for the test.
3. See figure 7 for CP.

TABLE III. Group A inspection for device type 05.
Terminal conditions (pins not designated are open)

Subgroup	Symbol	MIL-STD-883 method	Cases A, B, D	5	6	7	8	9	10	11	12	13	14	1	2	3	4	Meas. terminal	Test limits		
			Case C	1	2	3	4	5	6	7	8	9	10	11	12	13	14		Min	Max	Unit
			Test No.	Serial Input A	Serial Input B	Output QA	Output QB	Output QC	Output QD	GND	Clock	Clear	Output QE	Output QF	Output QG	Output QH	V_{CC}				
1	V_{OH}	3006	1	2.0 V	2.0 V	-.2 mA				GND	C	4.5 V					4.5 V	QA	2.4		
T_C = 25°C	"	"	2	"	"		-.2 mA			"	"	"					"	QB	"		"
"	"	"	3	"	"			-.2 mA		"	"	"					"	QC	"		"
"	"	"	4	"	"				-.2 mA	"	"	"					"	QD	"		"
"	"	"	5	"	"					"	"	"	-.2 mA				"	QE	"	V	"
"	"	"	6	"	"					"	"	"		-.2 mA			"	QF	"		"
"	"	"	7	"	"					"	"	"			-.2 mA		"	QG	"		"
"	"	"	8	"	"					"	"	"				-.2 mA	"	QH	"		"
"	"	"	9	4.5 V	4.5 V	-.2 mA				"	"	2.0 V					"	QA	"		"
"	V_{OL}	3007	10	0.7 V	0.7 V	2 mA				"	"	4.5 V					"	QA			"
"	"	"	11	"	"		2 mA			"	"	"					"	QB		"	"
"	"	"	12	"	"			2 mA		"	"	"					"	QC		"	"
"	"	"	13	"	"				2 mA	"	"	"					"	QD		"	"
"	"	"	14	"	"					"	"	"	2 mA				"	QE	0.3	"	"
"	"	"	15	"	"					"	"	"		2 mA			"	QF		"	"
"	"	"	16	"	"					"	"	"			2 mA		"	QG		"	"
"	"	"	17	"	"					"	"	"				2 mA	"	QH		"	"
"	"	"	18	2.0 V	"	2 mA				"	"	"					"	QA		"	"
"	"	"	19	0.7 V	2.0 V	2 mA				"	"	"					"	QA		"	"
"	"	"	20	4.5 V	4.5 V	2 mA				"	"	0.7 V					"	QA		"	"
"	I_{IL1}	3009	21	0.3 V	4.5 V					"							5.5 V	SA	-0.06	-.18	mA
"	"	"	22	4.5 V	0.3 V					"							"	SB	"	"	"
"	"	"	23							"	0.3 V						"	CLK	"	"	"
"	I_{IL2}	"	24							"		0.3 V					"	CLR	-0.12	-.36	"
"	I_{IH1}	3010	25	2.4 V	GND					"							"	SA		10	µA
"	"	"	26	GND	2.4 V					"							"	SB		"	"
"	"	"	27							"	2.4 V						"	CLK		"	"
"	I_{IH2}	"	28							"		2.4 V					"	CLR		20	"
"	I_{IH3}	"	29	5.5 V	GND					"							"	SA		100	"
"	"	"	30	GND	5.5 V					"							"	SB		"	"
"	"	"	31							"	5.5 V						"	CLK		"	"
"	I_{IH4}	"	32							"		5.5 V					"	CLR		200	"

See footnotes at end of table.

TABLE III. Group A inspection for device type 05 – Continued.
Terminal conditions (pins not designated are open)

Subgroup	Symbol	MIL-STD-883 method	Cases A, B, D	5	6	7	8	9	10	11	12	13	14	1	2	3	4	Meas. terminal	Test limits		
			Case C	1	2	3	4	5	6	7	8	9	10	11	12	13	14		Min	Max	Unit
			Test No.	Serial Input A	Serial Input B	Output QA	Output QB	Output QC	Output QD	GND	Clock	Clear	Output QE	Output QF	Output QG	Output QH	V_{CC}				
1	I_{OS}	3011	33	4.5 V	4.5 V	GND				GND	A	4.5 V					5.5 V	QA	-3	-15	mA
T_C = 25°C	"	"	34				GND			"	"	"					"	QB	"	"	"
"	"	"	35					GND		"	"	"					"	QC	"	"	"
"	"	"	36						GND	"	"	"					"	QD	"	"	"
"	"	"	37							"	"	"	GND				"	QE	"	"	"
"	"	"	38							"	"	"		GND			"	QF	"	"	"
"	"	"	39							"	"	"			GND		"	QG	"	"	"
"	"	"	40							"	"	"				GND	"	QH	"	"	"
"	I_{CC1}	3005	41	GND	GND					"	0.3 V	D					"	V_{CC}			"
"	I_{CC2}	3005	42	GND	GND					"	2.4 V	D					"	V_{CC}		9	"
2	Same tests, terminal conditions and limits as for subgroup 1, except T_C = 125°C.																				
3	Same tests, terminal conditions and limits as for subgroup 1, except T_C = -55°C.																				
7 2/			43	A 3/	A 3/	L 1/	L 1/	L 1/	L 1/	GND	2.0 V 3/	0.8 V 3/	L 1/	L 1/	L 1/	L 1/	4.5 V	All outputs	9 H or L as shown 1/		
T_C = 25°C			44	"	"	L	"	"	"	"	2.0 V	2.0 V	"	"	"	"	"	"	"		
"			45	"	"	L	"	"	"	"	0.7 V	"	"	"	"	"	"	"	"		
"			46	"	"	H	"	"	"	"	2.0 V	"	"	"	"	"	"	"	"		
"			47	"	"	"	"	"	"	"	0.7 V	"	"	"	"	"	"	"	"		
"			48	"	"	"	H	"	"	"	2.0 V	"	"	"	"	"	"	"	"		
"			49	"	"	"	"	"	"	"	0.7 V	"	"	"	"	"	"	"	"		
"			50	"	"	"	"	H	"	"	2.0 V	"	"	"	"	"	"	"	"		
"			51	"	"	"	"	"	"	"	0.7 V	"	"	"	"	"	"	"	"		
"			52	"	"	"	"	"	H	"	2.0 V	"	"	"	"	"	"	"	"		
"			53	"	"	"	"	"	"	"	0.7 V	"	"	"	"	"	"	"	"		
"			54	"	"	"	"	"	"	"	2.0 V	"	H	"	"	"	"	"	"		
"			55	"	"	"	"	"	"	"	0.7 V	"	"	"	"	"	"	"	"		
"			56	"	"	"	"	"	"	"	2.0 V	"	"	H	"	"	"	"	"		
"			57	"	"	"	"	"	"	"	0.7 V	"	"	"	"	"	"	"	"		
"			58	"	"	"	"	"	"	"	2.0 V	"	"	"	H	"	"	"	"		
"			59	"	"	"	"	"	"	"	0.7 V	"	"	"	"	"	"	"	"		
"			60	"	"	"	"	"	"	"	2.0 V	"	"	"	"	H	"	"	"		
"			61	B	"	"	"	"	"	"	2.0 V	"	"	"	"	"	"	"	"		
"			62	"	"	"	"	"	"	"	0.7 V	"	"	"	"	"	"	"	"		
"			63	"	"	L	"	"	"	"	2.0 V	"	"	"	"	"	"	"	"		
"			64	"	"	"	"	"	"	"	0.7 V	"	"	"	"	"	"	"	"		
"			65	"	"	"	L	"	"	"	2.0 V	"	"	"	"	"	"	"	"		
"			66	"	"	"	"	"	"	"	0.7 V	"	"	"	"	"	"	"	"		
"			67	"	"	"	"	L	"	"	2.0 V	"	"	"	"	"	"	"	"		
"			68	"	"	"	"	"	"	"	0.7 V	"	"	"	"	"	"	"	"		
"			69	"	"	"	"	"	L	"	2.0 V	"	"	"	"	"	"	"	"		
"			70	"	"	"	"	"	"	"	0.7 V	"	"	"	"	"	"	"	"		
"			71	"	"	"	"	"	"	"	2.0 V	"	L	"	"	"	"	"	"		
"			72	"	"	"	"	"	"	"	0.7 V	"	"	"	"	"	"	"	"		
"			73	"	"	"	"	"	"	"	2.0 V	"	"	L	"	"	"	"	"		
"			74	"	"	"	"	"	"	"	0.7 V	"	"	"	"	"	"	"	"		
"			75	"	"	"	"	"	"	"	2.0 V	"	"	"	L	"	"	"	"		
"			76	"	"	"	"	"	"	"	0.7 V	"	"	"	"	"	"	"	"		
"			77	"	"	"	"	"	"	"	2.0 V	"	"	"	"	L	"	"	"		

See footnotes at end of table.

TABLE III. Group A inspection for device type 05 – Continued.
Terminal conditions (pins not designated are open)

Subgroup	Symbol	MIL-STD-883 method	Cases A, B, D	5	6	7	8	9	10	11	12	13	14	1	2	3	4	Meas. terminal	Test limits		
			Case C	1	2	3	4	5	6	7	8	9	10	11	12	13	14		Min	Max	Unit
			Test No.	Serial Input A	Serial Input B	Output QA	Output QB	Output QC	Output QD	GND	Clock	Clear	Output QE	Output QF	Output QG	Output QH	V_{CC}				
7 2/ T_C = 25°C			78	A	A	L 1/	L 1/	L 1/	L 1/	GND	2.0 V 3/	2.0 V 3/	L 1/	L 1/	L 1/	L 1/	4.5 V	All outputs	H or L as shown 1/		
"			79	"	"	L	"	"	"	"	0.7 V	"	"	"	"	"	"	"	"		
"			80	"	"	H	"	"	"	"	2.0 V	"	"	"	"	"	"	"	"		
"			81	"	"	"	"	"	"	"	0.7 V	"	"	"	"	"	"	"	"		
"			82	"	"	"	H	"	"	"	2.0 V	"	"	"	"	"	"	"	"		
"			83	"	"	"	"	"	"	"	0.7 V	"	"	"	"	"	"	"	"		
"			84	"	"	"	"	H	"	"	2.0 V	"	"	"	"	"	"	"	"		
"			85	"	"	"	"	"	"	"	0.7 V	"	"	"	"	"	"	"	"		
"			86	"	"	"	"	"	H	"	2.0 V	"	"	"	"	"	"	"	"		
"			87	"	"	"	"	"	"	"	0.7 V	"	"	"	"	"	"	"	"		
"			88	"	"	"	"	"	"	"	2.0 V	"	H	"	"	"	"	"	"		
"			89	"	"	"	"	"	"	"	0.7 V	"	"	"	"	"	"	"	"		
"			90	"	"	"	"	"	"	"	2.0 V	"	"	H	"	"	"	"	"		
"			91	"	"	"	"	"	"	"	0.7 V	"	"	"	"	"	"	"	"		
"			92	"	"	"	"	"	"	"	2.0 V	"	"	"	H	"	"	"	"		
"			93	"	"	"	"	"	"	"	0.7 V	"	"	"	"	"	"	"	"		
"			94	"	"	"	"	"	"	"	2.0 V	"	"	"	"	H	"	"	"		
"			95	"	B	"	"	"	"	"	2.0 V	"	"	"	"	"	"	"	"		
"			96	"	"	"	"	"	"	"	0.7 V	"	"	"	"	"	"	"	"		
"			97	"	"	L	"	"	"	"	2.0 V	"	"	"	"	"	"	"	"		
"			98	"	"	"	"	"	"	"	0.7 V	"	"	"	"	"	"	"	"		
"			99	"	"	"	L	"	"	"	2.0 V	"	"	"	"	"	"	"	"		
"			100	"	"	"	"	"	"	"	0.7 V	"	"	"	"	"	"	"	"		
"			101	"	"	"	"	L	"	"	2.0 V	"	"	"	"	"	"	"	"		
"			102	"	"	"	"	"	"	"	0.7 V	"	"	"	"	"	"	"	"		
"			103	"	"	"	"	"	L	"	2.0 V	"	"	"	"	"	"	"	"		
"			104	"	"	"	"	"	"	"	0.7 V	"	"	"	"	"	"	"	"		
"			105	"	"	"	"	"	"	"	2.0 V	"	L	"	"	"	"	"	"		
"			106	"	"	"	"	"	"	"	0.7 V	"	"	"	"	"	"	"	"		
"			107	"	"	"	"	"	"	"	2.0 V	"	"	L	"	"	"	"	"		
"			108	"	"	"	"	"	"	"	0.7 V	"	"	"	"	"	"	"	"		
"			109	"	"	"	"	"	"	"	2.0 V	"	"	"	L	"	"	"	"		
"			110	"	"	"	"	"	"	"	0.7 V	"	"	"	"	"	"	"	"		
"			111	"	"	"	"	"	"	"	2.0 V	"	"	"	"	L	"	"	"		
"			112	"	A	"	"	"	"	"	2.0 V	"	"	"	"	"	"	"	"		
"			113	"	"	"	"	"	"	"	0.7 V	"	"	"	"	"	"	"	"		
"			114	"	"	H	"	"	"	"	2.0 V	"	"	"	"	"	"	"	"		
"			115	"	"	"	"	"	"	"	0.7 V	"	"	"	"	"	"	"	"		
"			116	"	"	"	H	"	"	"	2.0 V	"	"	"	"	"	"	"	"		
"			117	"	"	"	"	"	"	"	0.7 V	"	"	"	"	"	"	"	"		
"			118	"	"	"	"	H	"	"	2.0 V	"	"	"	"	"	"	"	"		
"			119	"	"	"	"	"	"	"	0.7 V	"	"	"	"	"	"	"	"		
"			120	"	"	"	"	"	H	"	2.0 V	"	"	"	"	"	"	"	"		
"			121	"	"	"	"	"	"	"	0.7 V	"	"	"	"	"	"	"	"		
"			122	"	"	"	"	"	"	"	2.0 V	"	H	"	"	"	"	"	"		
"			123	"	"	"	"	"	"	"	0.7 V	"	"	"	"	"	"	"	"		
"			124	"	"	"	"	"	"	"	2.0 V	"	"	H	"	"	"	"	"		
"			125	"	"	"	"	"	"	"	0.7 V	"	"	"	"	"	"	"	"		
"			126	"	"	"	"	"	"	"	2.0 V	"	"	"	H	"	"	"	"		
"			127	"	"	"	"	"	"	"	0.7 V	"	"	"	"	"	"	"	"		
"			128	"	"	"	"	"	"	"	2.0 V	"	"	"	"	H	"	"	"		
"			129	B	B	"	"	"	"	"	2.0 V	"	"	"	"	"	"	"	"		
"			130	"	"	"	"	"	"	"	0.7 V	"	"	"	"	"	"	"	"		
"			131	"	"	L	"	"	"	"	2.0 V	"	"	"	"	"	"	"	"		
"			132	"	"	"	"	"	"	"	0.7 V	"	"	"	"	"	"	"	"		
"			133	"	"	"	L	"	"	"	2.0 V	"	"	"	"	"	"	"	"		
"			134	"	"	"	L	"	"	"	0.7 V	"	"	"	"	"	"	"	"		
"			135	"	"	"	L	L	"	"	2.0 V	"	"	"	"	"	"	"	"		

See footnotes at end of table.

TABLE III. Group A inspection for device type 05 – Continued.
Terminal conditions (pins not designated are open)

Subgroup	Symbol	MIL-STD-883 method	Cases A, B, D	5	6	7	8	9	10	11	12	13	14	1	2	3	4	Meas. terminal	Test limits		
			Case C	1	2	3	4	5	6	7	8	9	10	11	12	13	14		Min	Max	Unit
			Test No.	Serial Input A	Serial Input B	Output QA	Output QB	Output QC	Output QD	GND	Clock	Clear	Output QE	Output QF	Output QG	Output QH	V_{CC}				
7 2/			136	B 3/	B 3	L 1/	L 1/	L 1/	H 1/	GND	0.7 V	2.0 V 3/	H 1/	H 1/	H 1/	H 1/	4.5 V	All	H or L		
T_C = 25°C			137	"	"	"	"	"	L	"	2.0 V	"	"	"	"	"	"	outputs	as shown 1/		
"			138	"	"	"	"	"	"	"	0.7 V	"	"	"	"	"	"	"	"		
"			139	"	"	"	"	"	"	"	2.0 V	"	L	"	"	"	"	"	"		
"			140	"	"	"	"	"	"	"	0.7 V	"	"	"	"	"	"	"	"		
"			141	"	"	"	"	"	"	"	2.0 V	"	"	L	"	"	"	"	"		
"			142	"	"	"	"	"	"	"	0.7 V	"	"	"	"	"	"	"	"		
"			143	"	"	"	"	"	"	"	2.0 V	"	"	"	L	"	"	"	"		
"			144	"	"	"	"	"	"	"	0.7 V	"	"	"	"	"	"	"	"		
"			145	"	"	"	"	"	"	"	2.0 V	"	"	"	"	L	"	"	"		
"			146	A	A	"	"	"	"	"	2.0 V	"	"	"	"	"	"	"	"		
"			147	"	"	"	"	"	"	"	0.7 V	"	"	"	"	"	"	"	"		
"			148	"	"	H	"	"	"	"	2.0 V	"	"	"	"	"	"	"	"		
"			149	"	"	"	"	"	"	"	0.7 V	"	"	"	"	"	"	"	"		
"			150	"	"	"	H	"	"	"	2.0 V	"	"	"	"	"	"	"	"		
"			151	"	"	"	"	"	"	"	0.7 V	"	"	"	"	"	"	"	"		
"			152	"	"	"	"	H	"	"	2.0 V	"	"	"	"	"	"	"	"		
"			153	"	"	"	"	"	"	"	0.7 V	"	"	"	"	"	"	"	"		
"			154	"	"	"	"	"	H	"	2.0 V	"	"	"	"	"	"	"	"		
"			155	"	"	"	"	"	"	"	0.7 V	"	"	"	"	"	"	"	"		
"			156	"	"	"	"	"	"	"	2.0 V	"	H	"	"	"	"	"	"		
"			157	"	"	"	"	"	"	"	0.7 V	"	"	"	"	"	"	"	"		
"			158	"	"	"	"	"	"	"	2.0 V	"	"	H	"	"	"	"	"		
"			159	"	"	"	"	"	"	"	0.7 V	"	"	"	"	"	"	"	"		
"			160	"	"	"	"	"	"	"	2.0 V	"	"	"	H	"	"	"	"		
"			161	"	"	"	"	"	"	"	0.7 V	"	"	"	H	"	"	"	"		
"			162	"	"	"	"	"	"	"	2.0 V	"	"	"	H	H	"	"	"		
"			163	"	"	L	L	L	L	"	2.0 V	0.8 V	L	L	L	L	"	"	"		
8	Same tests, terminal conditions and limits as for subgroup 7, except T_C = 125°C and -55°C.																				
9	f_{MAX}	(Fig 8)	164	G	G					GND	F	H				OUT	5.0 V	QH	4		MHz
T_C = 25°C	t_{PHL1}	3003	165	E, G	E, G	OUT				"	"	"					"	CLR to QA			ns
"	"	(Fig 8)	166	"	"		OUT			"	"	"					"	CLR to QB		"	"
"	"	"	167	"	"			OUT		"	"	"					"	CLR to QC		"	"
"	"	"	168	"	"				OUT	"	"	"					"	CLR to QD	110	"	"
"	"	"	169	"	"					"	"	"	OUT				"	CLR to QE		"	"
"	"	"	170	"	"					"	"	"		OUT			"	CLR to QF		"	"
"	"	"	171	"	"					"	"	"			OUT		"	CLR to QG		"	"
"	"	"	172	"	"					"	"	"				OUT	"	CLR to QH		"	"
"	t_{PLH2}	"	173	G	G	OUT				"	"	"					"	CLK to QA			"
"	"	"	174	"	"		OUT			"	"	"					"	CLK to QB		"	"
"	"	"	175	"	"			OUT		"	"	"					"	CLK to QC		"	"
"	"	"	176	"	"				OUT	"	"	"					"	CLK to QD		"	"
"	"	"	177	"	"					"	"	"	OUT				"	CLK to QE	80	"	"
"	"	"	178	"	"					"	"	"		OUT			"	CLK to QF		"	"
"	"	"	179	"	"					"	"	"			OUT		"	CLK to QG		"	"
"	"	"	180	"	"					"	"	"				OUT	"	CLK to QH		"	"

See footnotes at end of table.

TABLE III. Group A inspection for device type 05 – Continued.
Terminal conditions (pins not designated are open)

Subgroup	Symbol	MIL-STD-883 method	Cases A, B, D	5	6	7	8	9	10	11	12	13	14	1	2	3	4	Meas. terminal	Test limits		
			Case C	1	2	3	4	5	6	7	8	9	10	11	12	13	14				
			Test No.	Serial Input A	Serial Input B	Output QA	Output QB	Output QC	Output QD	GND	Clock	Clear	Output QE	Output QF	Output QG	Output QH	V_{CC}		Min	Max	Unit
9	t_{PHL2}	3003	181	G	G	OUT				GND	F	H					5.0 V	CLK to QA			ns
$T_C = 25°C$	"	(Fig 8)	182	"	"		OUT			"	"	"					"	CLK to QB		"	"
"	"	"	183	"	"			OUT		"	"	"					"	CLK to QC		"	"
"	"	"	184	"	"				OUT	"	"	"					"	CLK to QD	120	"	"
"	"	"	185	"	"					"	"	"	OUT				"	CLK to QE		"	"
"	"	"	186	"	"					"	"	"		OUT			"	CLK to QF		"	"
"	"	"	187	"	"					"	"	"			OUT		"	CLK to QG		"	"
"	"	"	188	"	"					"	"	"				OUT	"	CLK to QH		"	"
10	f_{MAX}	(Fig 8)	189	G	G					"	"	"				OUT	"	QH	3		MHz
T_C=125°C	t_{PHL1}	3003	190	E, G	E, G	OUT				"	"	"					"	CLR to QA			ns
"	"	(Fig 8)	191	"	"		OUT			"	"	"					"	CLR to QB		"	"
"	"	"	192	"	"			OUT		"	"	"					"	CLR to QC		"	"
"	"	"	193	"	"				OUT	"	"	"					"	CLR to QD	140	"	"
"	"	"	194	"	"					"	"	"	OUT				"	CLR to QE		"	"
"	"	"	195	"	"					"	"	"		OUT			"	CLR to QF		"	"
"	"	"	196	"	"					"	"	"			OUT		"	CLR to QG		"	"
"	"	"	197	"	"					"	"	"				OUT	"	CLR to QH		"	"
"	t_{PLH2}	"	198	G	G	OUT				"	"	"					"	CLK to QA			"
"	"	"	199	"	"		OUT			"	"	"					"	CLK to QB		"	"
"	"	"	200	"	"			OUT		"	"	"					"	CLK to QC		"	"
"	"	"	201	"	"				OUT	"	"	"					"	CLK to QD	120	"	"
"	"	"	202	"	"					"	"	"	OUT				"	CLK to QE		"	"
"	"	"	203	"	"					"	"	"		OUT			"	CLK to QF		"	"
"	"	"	204	"	"					"	"	"			OUT		"	CLK to QG		"	"
"	"	"	205	"	"					"	"	"				OUT	"	CLK to QH		"	"
"	t_{PHL2}	"	206	"	"	OUT				"	"	"					"	CLK to QA			"
"	"	"	207	"	"		OUT			"	"	"					"	CLK to QB		"	"
"	"	"	208	"	"			OUT		"	"	"					"	CLK to QC		"	"
"	"	"	209	"	"				OUT	"	"	"					"	CLK to QD	135	"	"
"	"	"	210	"	"					"	"	"	OUT				"	CLK to QE		"	"
"	"	"	211	"	"					"	"	"		OUT			"	CLK to QF		"	"
"	"	"	212	"	"					"	"	"			OUT		"	CLK to QG		"	"
"	"	"	213	"	"					"	"	"				OUT	"	CLK to QH		"	"
11	Same tests, terminal conditions and limits as for subgroup 10, except T_C = -55°C.																				

NOTES: C = Clock pulse (see figure 8).
D = Momentary ground then 4.5 V to clear register before start of test.
E = Outputs are set to high level prior to measurement of t_{PHL} from clear.
F = Input A from figure 8.
G = Input B from figure 8.
H = Input C from figure 8.

_/ Output voltages shall be either: (a) H = 2.4 V, minimum and L = 0.4 V, maximum when using a high speed checker double comparator; or
(b) H ≥ 1.5 V and L < 1.5 V when using a high speed checker single comparator.

1 _/ Only a summary of attributes data is required.

_/ INPUTS: A = 2.0 V and B = 0.7 V.

2

3

5. PACKAGING

5.1 Packaging requirements. For acquisition purposes, the packaging requirements shall be as specified in the contract or order (see 6.2). When packaging of materiel is to be performed by DoD or in-house contractor personnel, these personnel need to contact the responsible packaging activity to ascertain packaging requirements. Packaging requirements are maintained by the Inventory Control Point's packaging activity within the Military Service or Defense Agency, or within the military service's system command. Packaging data retrieval is available from the managing Military Department's or Defense Agency's automated packaging files, CD-ROM products, or by contacting the responsible packaging activity.

6. NOTES

(This section contains information of a general or explanatory nature that may be helpful, but it is not mandatory)

6.1 Intended use. Microcircuits conforming to this specification are intended for logistic support of existing equipment.

6.2 Acquisition requirements. Acquisition documents should specify the following:

a. Title, number, and date of the specification.
b. PIN and compliance identifier, if applicable (see 1.2).
c. Requirements for delivery of one copy of the conformance inspection data pertinent to the device inspection lot to be supplied with each shipment by the device manufacturer, if applicable.
d. Requirement for certificate of compliance, if applicable.
e. Requirements for notification of change of product or process to acquiring activity in addition to notification to the qualifying activity, if applicable.
f. Requirements for failure analysis (including required test condition of method 5003), corrective action and reporting of results, if applicable.
g. Requirements for product assurance options.
h. Requirements for carriers, special lead lengths or lead forming, if applicable. These requirements shall not affect the part number. Unless otherwise specified, these requirements will not apply to direct purchase by or direct shipment to the Government.
i. Requirements for "JAN" marking.
j. Packaging requirements (see 5.1).

6.3 Qualification. With respect to products requiring qualification, awards will be made only for products which are, at the time of award of contract, qualified for inclusion in Qualified Manufacturers List QML-38535 whether or not such products have actually been so listed by that date. The attention of the contractors is called to these requirements, and manufacturers are urged to arrange to have the products that they propose to offer to the Federal Government tested for qualification in order that they may be eligible to be awarded contracts or purchase orders for the products covered by this specification. Information pertaining to qualification of products may be obtained from DSCC-VQ, 3990 E. Broad Street, Columbus, Ohio 43123-1199.

6.4 Superseding information. MIL-M-0038510/28A(USAF) was issued as an "in lieu of" document for MIL-M-38510/28(USAF). This revision, MIL-M-38510/28C supersedes MIL-M-0038510/28A(USAF) and MIL-M-38510/28B(USAF). The requirements of MIL-M-38510 have been superseded to take advantage of the available Qualified Manufacturer Listing (QML) system provided by MIL-PRF-38535. Previous references to MIL-M-38510 in this document have been replaced by appropriate references to MIL-PRF-38535. All technical requirements now consist of this specification and MIL-PRF-38535. The MIL-M-38510 specification sheet number and PIN have been retained to avoid adversely impacting existing government logistics systems and contractor's parts lists.

6.5 Abbreviations, symbols and definitions. The abbreviations, symbols, and definitions used herein are defined in *MIL-PRF-38535* and MIL-HDBK-1331, and as follows:

GND ..... Electrical ground (common terminal)
V_{IN} ..... Voltage level at an input terminal
I_{IN} ..... Current flowing into an input terminal

6.6 Logistic support. Lead materials and finishes (see 3.3) are interchangeable. Unless otherwise specified, microcircuits acquired for Government logistic support will be acquired to device class B (see 1.2.2), lead material and finish A (see 3.4). Longer lead lengths and lead forming shall not affect the part number.

6.7 Substitutability. The cross-reference information below is presented for the convenience of users. Microcircuits covered by this specification will functionally replace the listed generic-industry type. Generic-industry microcircuit types may not have equivalent operational performance characteristics across military temperature ranges or reliability factors equivalent to MIL-M-35810 device types and may have slight physical variations in relation to case size. The presence of this information should not be deemed as permitting substitution of generic-industry types for MIL-M-38510 types or as a waiver of any of the provisions of MIL-PRF-38535.

Device type	Commercial type
01	54L95
02	54L164
03	93L28
04	93L00
05	76L70

6.8 Changes from previous issue. Marginal notations are not used in this revision to identify changes with respect to the previous issue due to the extensiveness of the changes.

Custodians:
Army - CR
Navy - EC
Air Force - 11
DLA - CC

Preparing activity:
DLA - CC

(Project 5962-2128)

Review activities:
Army - MI, SM
Navy - AS, CG, MC, SH, TD
Air Force - 03, 19, 99

NOTE: The activities listed above were interested in this document as of the date of this document. Since organizations and responsibilities can change, you should verify the currency of the information above using the ASSIST Online database at http://assist.daps.dla.mil.