INCH-POUND
MIL-M-38510/23D
11 July 2003
SUPERSEDING
MIL-M-38510/23A
14 July 1972

MILITARY SPECIFICATION

MICROCIRCUITS, DIGITAL, TTL, HIGH SPEED, NAND GATES MONOLITHIC SILICON

This specification is approved for use by all Departments and Agencies of the Department of Defense.

Inactive for new design after 06 September 1996

1. SCOPE

1.1 Scope. This specification covers the detail requirements for monolithic silicon, TTL, high speed, positive NAND logic gating microcircuits. Two product assurance classes and a choice of case outlines and lead finishes are provided and are reflected in the complete part number. For this product, the requirements of MIL-M-38510 have been superseded by MIL-PRF-38535, (see 6.3)

1.2 Part number. The part number should be in accordance with MIL-PRF-38535, and as specified herein.

1.2.1 Device types. The device types should be as follows:

Device type	Circuit
01	Single, 8-input, positive NAND gate
02	Dual, 4-input, positive NAND gate
03	Triple, 3-input, positive NAND gate
04	Quadruple, 2-input, positive NAND gate
05	Hex, 1-input, inverter gate
06	Quadruple, 2-input positive NAND gate (open collector output)
07	Dual, 4-input positive NAND gate (open collector output)

1.2.2 Device class. The device class should be the product assurance level as defined in MIL-PRF-38535.

1.2.3 Case outline. The case outline should be as designated in MIL-STD-1835 and as follows:

Outline letter	Descriptive designator	Terminals	Package style
A 1/	GDFP5-F14 or CDFP6-F14	14	Flat pack
B 1/	GDFP4-14	14	Flat pack
C	GDIP1-T14 or CDIP2-T14	14	Dual-in-line
D	GDFP1-F14 or CDFP2-F14	14	Flat pack

1/ Inactive package case outline.

Beneficial comments (recommendations, additions, deletions) and any pertinent data which may be of use in improving this document should be addressed to: Commander, Defense Supply Center Columbus, ATTN: DSCC-VAS, P.O. Box 3990, Columbus, OH 43216-5000, using the self addresses Standardization Document Improvement Proposal (DD Form 1426) appearing at the end of this document or by letter.

AMSC N/A FSC 5962
DISTRIBUTION STATEMENT A. Approved for public release; distribution is unlimited.

1.3 Absolute maximum ratings.

Supply voltage range ..... -0.5 V dc to +7.0 V dc
Input voltage range ..... -1.5 V dc at -12 mA to +5.5 V dc
Storage temperature range ..... -65°C to +150°C
Maximum power dissipation per gate (P_D) ..... 60 mW dc 2/
Lead temperature (soldering, 10 seconds) ..... +300°C.
Junction temperature (T_J) ..... +175°C
Thermal resistance, junction-to-case (Θ_{JC}):
Cases A, B, C, and D ..... See MIL-STD-1835

1.4 Recommended operating conditions.

Supply voltage (V_{CC}) ..... 4.5 V dc minimum to 5.5 V dc maximum
Minimum high-level input voltage (V_{IH}) ..... 2.0 V dc
Maximum low-level input voltage (V_{IL}) ..... 0.8 V dc
Normalized fanout (each output) ..... 10 maximum 3/
Ambient operating temperature range (T_C) ..... -55°C to +125°C

2. APPLICABLE DOCUMENTS

2.1 Government documents.

2.1.1 Specifications, standards, and handbooks. The following specifications and standards form a part of this specification to the extent specified herein. Unless otherwise specified, the issues of these documents are those listed in the issue of the Departments of Defense Index of Specifications and Standards (DODISS) and supplement thereto, cited in the solicitation.

DEPARTMENT OF DEFENSE SPECIFICATIONS

MIL-PRF-38535 - Integrated Circuits (Microcircuits) Manufacturing, General Specification for.

DEPARTMENT OF DEFENSE STANDARDS

MIL-STD-883 - Test Method Standard for Microelectronics.
MIL-STD-1835 - Interface Standard Electronic Component Case Outlines.

(Copies of these documents are available from the Standardization Document Order Desk, 700 Robbins Avenue, Building 4D, Philadelphia, PA 19111-5094.

2.2 Order of precedence. In the event of a conflict between the text of this specification and the references cited herein the text of this document shall takes precedence. Nothing in this document, however, supersedes applicable laws and regulations unless a specific exemption has been obtained.

2/ Must withstand the added P_D due to short circuit test (e.g., I_{OS}) at one output for 5 seconds duration.
3/ The device shall fanout in both high and low levels to the specified number of inputs of the same device type as that being tested.

3. REQUIREMENTS

3.1 Qualification. Microcircuits furnished under this specification shall be products that are manufactured by a manufacturer authorized by the qualifying activity for listing on the applicable qualified manufacturers list before contract award (see 4.3 and 6.4).

3.2 Item requirements. The individual item requirements shall be in accordance with MIL-PRF-38535 and as specified herein or as modified in the device manufacturer's Quality Management (QM) plan. The modification in the QM plan shall not affect the form, fit, or function as described herein. This slash sheet has been modified to allow the manufacturer to use alternate die/fabrication requirements of paragraph A.3.2.2 of MIL-PRF-38535 or other alternative approved by the Qualifying Activity.

3.3 Design, construction, and physical dimensions. The design, construction, and physical dimensions shall be as specified in MIL-PRF-38535 and herein.

3.3.1 Logic diagrams and terminal connections. The logic diagram and terminal connections shall be as specified on figure 1.

3.3.2 Truth tables and logic equations. The truth tables and logic equations shall be as specified on figure 2.

3.3.3 Schematic circuits. The schematic circuits shall be maintained by the manufacturer and made available to the qualifying activity and the preparing activity (DSCC-VA) upon request.

3.3.4 Case outlines. The case outlines shall be as specified in 1.2.3.

3.4 Lead material and finish. The lead material and finish shall be in accordance with MIL-PRF-38535 (see 6.6).

3.5 Electrical performance characteristics. The electrical performance characteristics are as specified in table I, and apply over the full recommended ambient operating temperature range, unless otherwise specified.

3.6 Rebonding. Rebonding shall be in accordance with MIL-PRF-38535.

3.7 Electrical test requirements. Electrical test requirements for each device class shall be the subgroups specified in table II. The electrical tests for each subgroup are described in table III.

3.8 Marking. Marking shall be in accordance with MIL-PRF-38535. For class Q product built in accordance with A.3.2.2 of MIL-PRF-38535, or as modified in the manufacturer's Quality Management (QM) Plan, the "QD" certification mark shall be used in place of the "QML" or "Q" certification mark.

3.9 Microcircuit group assignment. The devices covered by this specification shall be in microcircuit group number 1 (see MIL-PRF-38535, appendix A).

TABLE I. Electrical performance characteristics.

Test	Symbol	Conditions $-55°C \le T_A \le +125°C$	Device type	Limits Min	Limits Max	Units
High-level output voltage	V_{OH}	V_{CC} = 4.5 V, V_{IN} = 0.8 V, I_{OH} = -500 µA 1/	01,02,03, 04,05	2.4		V
Low-level output voltage	V_{OL}	V_{CC} = 4.5 V, I_{OL} = 20 mA, V_{IN} = 2.0 V for all inputs of gate under test 1/	01-07		0.4	V
Input clamp voltage	V_{IC}	V_{CC} = 4.5 V, I_{IN} = -12 mA, T_A = +25°C	01-07		-1.5	V
Maximum collector cut-off-current	I_{CEX}	V_{OH} = 5.5 V, V_{CC} = 4.5 V, V_{IN} = 0.8 V	06,07		250	µA
High-level input current	I_{IH1}	V_{CC} = 5.5 V, V_{IN} = 2.4 V 2/	01-07		50	µA
High-level input current	I_{IH2}	V_{CC} = 5.5 V, V_{IN} = 5.5 V 2/	01-07		100	µA
Low-level input current	I_{IL}	V_{CC} = 5.5 V, V_{IN} = 0.4 V 1/	01-07	-1.0	-2.0	mA
Short-circuit output current	I_{OS}	V_{CC} = 5.5 V 2/ 3/	01,02,03, 04,05	-40	-100	mA
High-level supply current per gate	I_{CCH}	V_{CC} = 5.5 V, V_{IN} = 0 V 2/	01-07		4.2	mA
Low-level supply current per gate	I_{CCL}	V_{CC} = 5.5 V, V_{IN} = 5.5 V 1/	01-07		10	mA
Propagation delay time high-to-low level	t_{PHL}	C_L = 50 pF, R_L = 280 Ω	01,	2	18	ns
			02,03, 04,05	2	16	
			06,07	3	18	
Propagation delay time low-to-high level	t_{PLH}	C_L = 50 pF, R_L = 280 Ω	01	2	16	ns
			02,03, 04,05	2	15	
			06,07	3	21	

1/ All unspecified inputs at 5.5 volts.

2/ All unspecified inputs grounded.

3/ Not more than one output should be shorted at a time

TABLE II. Electrical test requirements.

MIL-PRF-38535 test requirements	Subgroups (see table III)	
	Class S devices	Class B devices
Interim electrical parameters	1	1
Final electrical test parameters	1*, 2, 3, 9	1*, 2, 3, 9
Group A test requirements	1, 2, 3, 9, 10, 11	1, 2, 3, 9, 10, 11
Group B electrical test parameters when using the method 5005 QCI option	1, 2, 3	N/A
Group C end-point electrical parameters	1, 2, 3	1, 2, 3
Group D end-point electrical parameters	1, 2, 3	1, 2, 3

*PDA applies to subgroup 1 (see 4.3c).

4. VERIFICATION.

4.1 Sampling and inspection. Sampling and inspection procedures shall be in accordance with MIL-PRF-38535 or as modified in the device manufacturer’s Quality Management (QM) plan. The modification in the QM plan shall not effect the form, fit, or function as function as described herein.

4.2 Screening. Screening shall be in accordance with MIL-PRF-38535, and shall be conducted on all devices prior to qualification and quality conformance inspection. The following additional criteria shall apply:

a. The burn-in test duration, test condition, and test temperature, or approved alternatives shall be as specified in the device manufacturer's QM plan in accordance with MIL-PRF-38535. The burn-in test circuit shall be maintained under document control by the device manufacturer's Technology Review Board (TRB) in accordance with MIL-PRF-38535 and shall be made available to the acquiring or preparing activity upon request. The test circuit shall specify the inputs, outputs, biases, and power dissipation, as applicable, in accordance with the intent specified in test method 1015 of MIL-STD-883.

b. Interim and final electrical test parameters shall be as specified in table II, except interim electrical parameters test prior to burn-in is optional at the discretion of the manufacturer.

c. Additional screening for space level product shall be as specified in MIL-PRF-38535.

4.3 Qualification inspection. Qualification inspection shall be in accordance with MIL-PRF-38535.

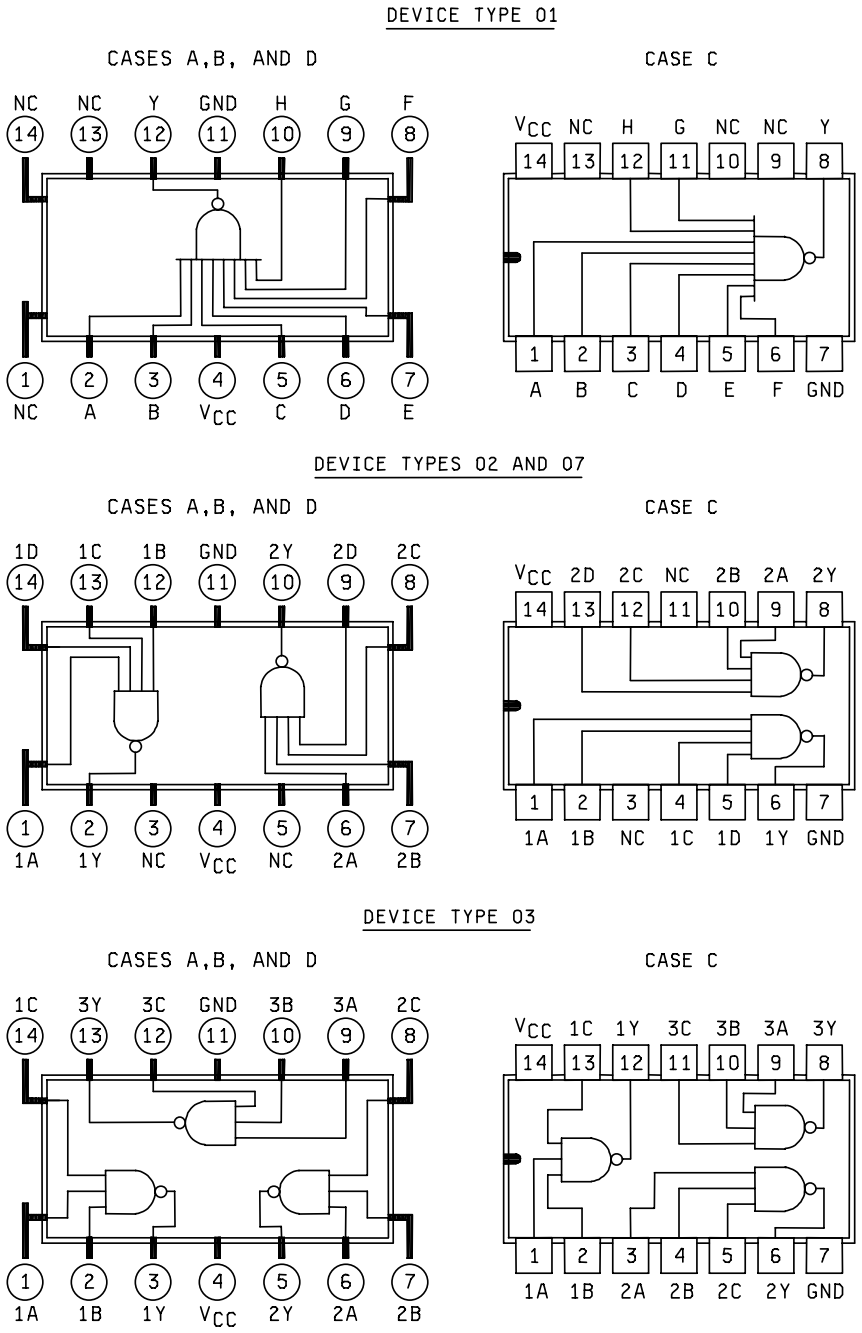

Figure 1. Logic diagrams and terminal connections (top views).

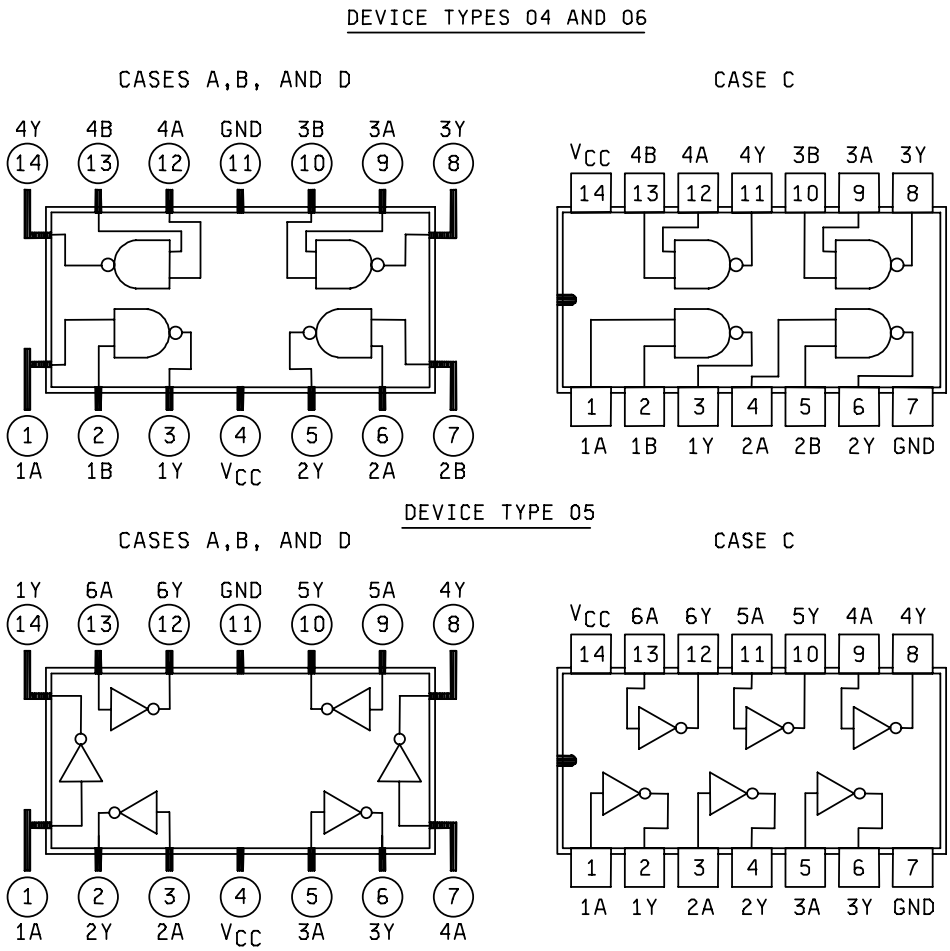

Figure 1. Logic diagrams and terminal connections (top views).

Device type 01

Truth table								
Input								Output
A	B	C	D	E	F	G	H	Y
H	H	H	H	H	H	H	H	L
All other combinations of H and L at the inputs give H output.								

Positive logic Y = $\overline{ABCDEFGH}$

Device types 02 and 07

Truth table				
Input				Output
A	B	C	D	Y
L	L	L	L	H
H	L	L	L	H
L	H	L	L	H
H	H	L	L	H
L	L	H	L	H
H	L	H	L	H
L	H	H	L	H
H	H	H	L	H
L	L	L	H	H
H	L	L	H	H
L	H	L	H	H
H	H	L	H	H
L	L	H	H	H
H	L	H	H	H
L	H	H	H	H
H	H	H	H	L

Positive logic Y = $\overline{ABCD}$

FIGURE 2. Truth tables.

Device type 03

Truth table			
Input			Output
A	B	C	Y
L	L	L	H
H	L	L	H
L	H	L	H
H	H	L	H
L	L	H	H
H	L	H	H
L	H	H	H
H	H	H	L

Positive logic Y = $\overline{ABC}$

Device types 04 and 06

Truth table each gate		
INPUT		OUTPUT
A	B	Y
L	L	H
H	L	H
L	H	H
H	H	L

Positive logic Y = $\overline{AB}$

Device type 05

Truth table each gate	
Input	Output
A	Y
L	H
H	L

Positive logic Y = $\overline{A}$

FIGURE 2. Truth tables – Continued.

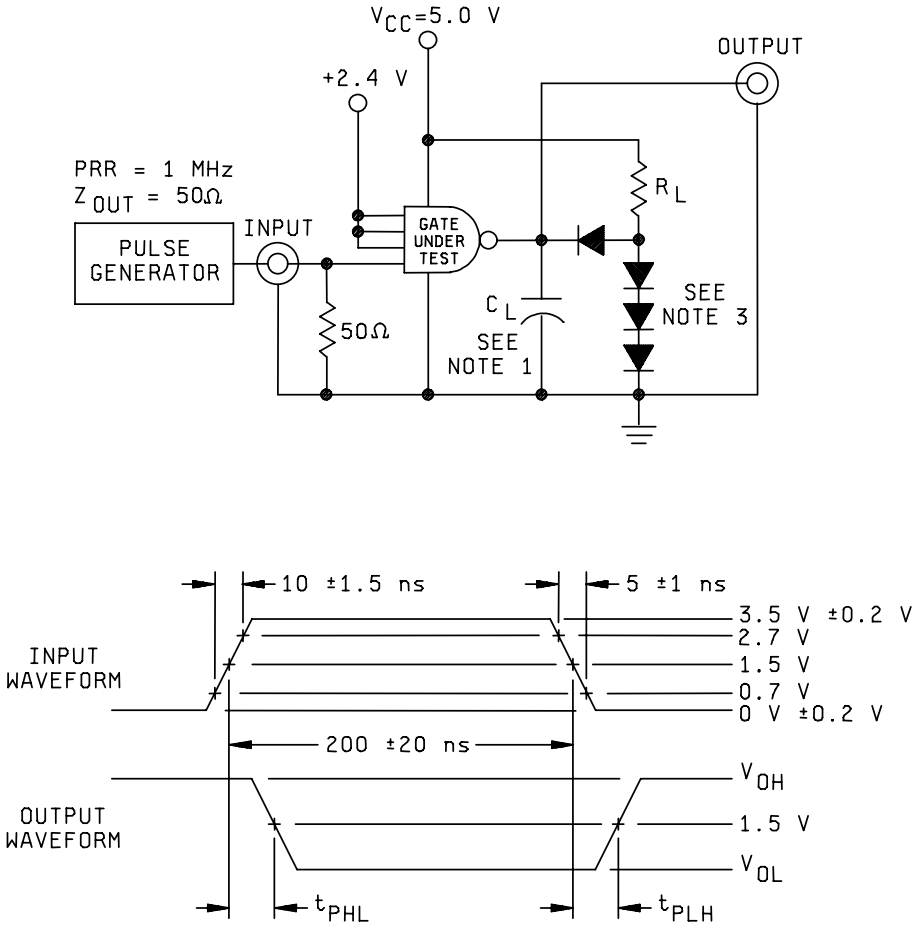

Notes:

1. C_L = 50 pF minimum, including scope probe, wiring, and stray capacitance, without package in test fixture.
2. Voltage measurements are to be made with respect to network ground terminal.
3. All diodes are 1N3064 or equivalent
4. R_L = 280 Ω ±5%.

FIGURE 3. Switching time test circuit except for open collector circuits.

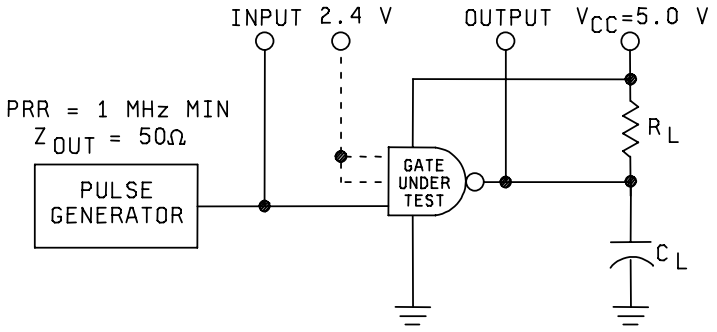

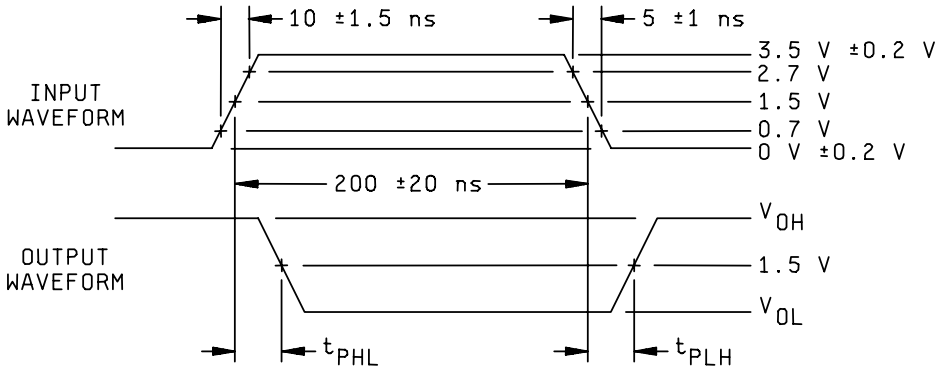

Notes:

1. C_L = 50 pF minimum, including scope probe, wiring, and stray capacitance, without package in test fixture.
3. Voltage measurements are to be made with respect to network ground terminal.
3. All diodes are 1N3064 or equivalent
4. R_L = 280 Ω ±5%.

FIGURE 4. Switching time test circuit for open collector circuits.

TABLE III. Group A inspection for device type 01.

Terminal conditions (pins not designated may be high ≥ 2.0 V, low ≤ 0.8 V, or open)

Subgroup	Symbol	MIL-STD-883 method	Cases A,B,D	1	2	3	4	5	6	7	8	9	10	11	12	13	14	Measured terminal	Test limits		Unit
			Case C	13	1	2	14	3	4	5	6	11	12	7	8	9	10		Min	Max	
			Test no.	NC	A	B	V_{CC}	C	D	E	F	G	H	GND	Y	NC	NC				
1	V_{OL}	3007	1		2.0 V	2.0 V	4.5 V	2.0 V	2.0 V	2.0 V	2.0 V	2.0 V	2.0 V	GND	20 mA			Y		0.4	V
T_A = +25°C	V_{OH}	3006	2		0.8 V	5.5 V	"	5.5 V	5.5 V	5.5 V	5.5 V	5.5 V	5.5 V	"	-0.5 mA			Y	2.4		"
		"	3		5.5 V	0.8 V	"	5.5 V	"	"	"	"	"	"	"			"	"		"
		"	4		"	5.5 V	"	0.8 V	"	"	"	"	"	"	"			"	"		"
		"	5		"	"	"	5.5 V	0.8 V	"	"	"	"	"	"			"	"		"
		"	6		"	"	"	"	5.5 V	0.8 V	"	"		"	"			"	"		"
		"	7		"	"	"	"	"	5.5 V	0.8 V	"	"	"	"			"	"		"
		"	8		"	"	"	"	"	"	5.5 V	0.8 V	"	"	"			"	"		"
		"	9		"	"	"	"	"	"	"	5.5 V	0.8 V	"	"			"	"		"
I	OS	3011	10		GND	GND	5.5 V	GND	GND	GND	GND	GND	GND	"	GND			Y	-40	-100	mA
I	I H 1	3010	11		2.4 V	GND	"	GND	GND	GND	GND	GND	GND	"				A		50	µA
		"	12		GND	2.4 V	"	GND	"	"	"	"	"	"				B		"	"
		"	13		"	GND	"	2.4 V	"	"	"	"	"	"				C		"	"
		"	14		"	"	"	GND	2.4 V	"	"	"	"	"				D		"	"
		"	15		"	"	"	"	GND	2.4 V	"	"	"	"				E		"	"
		"	16		"	"	"	"	"	GND	2.4 V	"	"	"				F		"	"
		"	17		"	"	"	"	"	"	GND	2.4 V	"	"				G		"	"
		"	18		"	"	"	"	"	"	"	GND	2.4 V	"				H		"	"
I	I H 2	"	19		5.5 V	"	"	"	"	"	"	GND	GND	"				A		100	"
		"	20		GND	5.5 V	"	"	"	"	"	"	"	"				B		"	"
		"	21		"	GND	"	5.5 v	"	"	"	"	"	"				C		"	"
		"	22		"	"	"	GND	5.5 V	"	"	"	"	"				D		"	"
		"	23		"	"	"	"	GND	5.5 V	"	"	"	"				E		"	"
		"	24		"	"	"	"	"	GND	5.5 V	"	"	"				F		"	"
		"	25		"	"	"	"	"	"	GND	5.5 V	"	"				G		"	"
		"	26		"	"	"	"	"	"	"	GND	5.5 V	"				H		"	"
I	I L	3009	27		0.4 V	5.5 V	"	5.5 v	5.5 V	5.5 V	5.5 V	5.5 V	5.5 V	"				A	-1.0	-2.0	mA
		"	28		5.5 V	0.4 V	"	5.5 V	"	"	"	"	"	"				B	"	"	"
		"	29		"	5.5 V	"	0.4 V	"	"	"	"	"	"				C	"	"	"
		"	30		"	"	"	5.5 V	0.4 V	"	"	"	"	"				D	"	"	"
		"	31		"	"	"	"	5.5 V	0.4 V	"	"	"	"				E	"	"	"
		"	32		"	"	"	"	"	5.5 V	0.4 V	"	"	"				F	"	"	"
		"	33		"	"	"	"	"	"	5.5 V	0.4 V	"	"				G	"	"	"
		"	34		"	"	"	"	"	"	"	5.5 V	0.4 V	"				H	"	"	"
I	CCL	3005	35		5.5 V	5.5 V	5.5 V	5.5 V	5.5 V	5.5 V	5.5 V	5.5 V	5.5 V	"				V_{CC}		10	mA
I	CCH	3005	36		GND	GND	5.5 V	GND	GND	GND	GND	GND	GND	"				V_{CC}		4.2	mA
V	I C		37		-12 mA		4.5 V							"				A		-1.5	V
			38			-12 mA	"							"				B		"	"
			39				"	-12 mA						"				C		"	"
			40				"		-12 mA					"				D		"	"
			41				"			-12 mA				"				E		"	"
			42				"				-12 mA			"				F		"	"
			43				"					-12 mA		"				G		"	"
			44				"						-12 mA	"				H		"	"

TABLE III. Group A inspection for device type 01 – Continued.

Terminal conditions (pins not designated may be high ≥ 2.0 V, low ≤ 0.8 V, or open)

Subgroup	Symbol	MIL-STD-883 method	Cases A,B,D	1	2	3	4	5	6	7	8	9	10	11	12	13	14	Measured terminal	Limits		Unit
			Case C	13	1	2	14	3	4	5	6	11	12	7	8	9	10		Min	Max	
			Test no.	NC	A	B	V_{CC}	C	D	E	F	G	H	GND	Y	NC	NC				
2	Same tests, terminal conditions and limits as for subgroup 1, except T_A = 125° C, and V_{IC} tests are omitted.																				
3	Same tests, terminal conditions and limits as for subgroup 1, except T_A = -55° C, and V_{IC} tests are omitted.																				
9	t_{PHL}	3003	45		IN	2.4 V	5.0 V	2.4 V	2.4 V	2.4 V	2.4 V	2.4 V	2.4 V	GND	OUT			A to Y	2	14	ns
T_A = +25°C	t_{PLH}	(Fig. 3)	46		IN	"	"	"	"	"	"	"	"	"	"			A to Y	2	12	"
10	t_{PHL}	3003	47		IN	2.4 V	5.0 V	2.4 V	2.4 V	2.4 V	2.4 V	2.4 V	2.4 V	GND	OUT			A to Y	2	16	"
T_A = +125°C	t_{PLH}	(Fig. 3)	48		IN	"	"	"	"	"	"	"	"	"	"			A to Y	2	16	"
11	t_{PHL}	3003	49		IN	2.4 V	5.0 V	2.4 V	2.4 V	2.4 V	2.4 V	2.4 V	2.4 V	GND	OUT			A to Y	2	18	"
T_A = -55°C	t_{PLH}	(Fig. 3)	50		IN	"	"	"	"	"	"	"	"	"	"			A to Y	2	14	"

TABLE III. Group A inspection for device type 02.

Terminal conditions (pins not designated may be high ≥ 2.0 V, low ≤ 0.8 V, or open)

Subgroup	Symbol	MIL-STD-883 method	Cases A,B,D	1	2	3	4	5	6	7	8	9	10	11	12	13	14	Measured terminal	Limits Min	Limits Max	Unit
			Case C	1	6	3	14	11	9	10	12	13	8	7	2	4	5				
			Test no.	1A	1Y	NC	V_{CC}	NC	2A	2B	2C	2D	2Y	GND	1B	1C	1D				
1	V_{OL}	3007	1	2.0 V	20 mA		4.5 V		5.5 V	5.5 V	5.5 V	5.5 V		GND	2.0 V	2.0 V	2.0 V	1Y		0.4	V
T_A = +25°C		"	2	5.5 V			"		2.0 V	2.0 V	2.0 V	2.0 V	20 mA	"	5.5 V	5.5 V	5.5 V	2Y		0.4	"
	OH	3006	3	0.8 V	-.5 mA		"		5.5 V	5.5 V	5.5 V	5.5 V		"	5.5 V	"	"	1Y	2.4		"
		"	4	5.5 V	-.5 mA		"		"	"	"	"		"	0.8 V	"	"	1Y	"		"
		"	5	"	-.5 mA		"		"	"	"	"		"	5.5 V	0.8 V	"	1Y	"		"
		"	6	"	-.5 mA		"		"	"	"	"		"	"	5.5 V	0.8 V	1Y	"		"
		"	7	"			"		0.8 V	"	"	"	-.5 mA	"	"	"	5.5 V	2Y	"		"
		"	8	"			"		5.5 V	0.8 V	"	"	-.5 mA	"	"	"	"	2Y	"		"
		"	9	"			"		"	5.5 V	0.8 V	"	-.5 mA	"	"	"	"	2Y	"		"
		"	10	"			"		"	5.5 V	5.5 V	0.8 V	-.5 mA	"	"	"	"	2Y	"		"
	OS	3011	11	GND	GND		5.5 V							"	GND	GND	GND	1Y	-40	-100	mA
		"	12				"		GND	GND	GND	GND	GND	"				2Y	-40	-100	"
	IH1	3010	13	2.4 V			"		GND	GND	GND	GND		"	GND	GND	GND	1A		50	µA
		"	14	GND			"		"	"	"	"		"	2.4 V	GND	GND	1B		"	"
		"	15	"			"		"	"	"	"		"	GND	2.4 V	GND	1C		"	"
		"	16	"			"		"	"	"	"		"	"	GND	2.4 V	1D		"	"
		"	17	"			"		2.4 V	"	"	"		"	"	"	GND	2A		"	"
		"	18	"			"		GND	2.4 V	"	"		"	"	"	"	2B		"	"
		"	19	"			"		"	GND	2.4 V	"		"	"	"	"	2C		"	"
		"	20	"			"		"	"	GND	2.4 V		"	"	"	"	2D		"	"
	IH2	"	21	5.5 V			"		"	"	"	GND		"	"	"	"	1A		100	"
		"	22	GND			"		"	"	"	"		"	5.5 V	"	"	1B		"	"
		"	23	"			"		"	"	"	"		"	GND	5.5 V	"	1C		"	"
		"	24	"			"		"	"	"	"		"	"	GND	5.5 V	1D		"	"
		"	25	"			"		5.5 V	"	"	"		"	"	"	GND	2A		"	"
		"	26	"			"		GND	5.5 V	"	"		"	"	"	"	2B		"	"
		"	27	"			"		"	GND	5.5 V	"		"	"	"	"	2C		"	"
		"	28	"			"		"	"	GND	5.5 V		"	"	"	"	2D		"	"
	IL	3009	29	0.4 V			5.5 V		5.5 V	5.5 V	5.5 V	5.5 V		"	5.5 V	5.5 V	5.5 V	1A	-1.0	-2.0	mA
		"	30	5.5 V			"		"	"	"	"		"	0.4 V	5.5 V	5.5 V	1B	"	"	"
		"	31	"			"		"	"	"	"		"	5.5 V	0.4 V	5.5 V	1C	"	"	"
		"	32	"			"		"	"	"	"		"	"	5.5 V	0.4 V	1D	"	"	"
		"	33	"			"		0.4 V	"	"	"		"	"	"	5.5 V	2A	"	"	"
		"	34	"			"		5.5 V	0.4 V	"	"		"	"	"	"	2B	"	"	"
		"	35	"			"		"	5.5 V	0.4 V	"		"	"	"	"	2C	"	"	"
		"	36	"			"		"	"	5.5 V	0.4 V		"	"	"	"	2D	"	"	"
	CCL	3005	37	5.5V			5.5V		5.5 V	5.5 V	5.5 V	5.5 V		"	5.5 V	5.5 V	5.5 V	V_{CC}		20	mA
	CCH	3005	38	GND			5.5 V		GND	GND	GND	GND		"	GND	GND	GND	V_{CC}		8.4	mA

TABLE III. Group A inspection for device type 02 – Continued.

Terminal conditions (pins not designated may be high ≥ 2.0 V, low ≤ 0.8 V, or open)

Subgroup	Symbol	MIL-STD-883 method	Cases A,B,D	1	2	3	4	5	6	7	8	9	10	11	12	13	14	Measured terminal	Limits		Unit
			Case C	1	6	3	14	11	9	10	12	13	8	7	2	4	5		Min	Max	
			Test no.	1A	1Y	NC	V_{CC}	NC	2A	2B	2C	2D	2Y	GND	1B	1C	1D				
1	V_{IC}		39	-12 mA			4.5 V							GND				1A		-1.5	V
T_A = +25°C			40				"							"	-12 mA			1B		"	"
			41				"							"		-12 mA		1C		"	"
			42				"							"			-12 mA	1D		"	"
			43				"		-12 mA					"				2A		"	"
			44				"			-12 mA				"				2B		"	"
			45				"				-12 mA			"				2C		"	"
			46				"					-12 mA		"				2D		"	"
2	Same tests, terminal conditions and limits as for subgroup 1, except T_A =+125°C and V_{IC} tests are omitted.																				
3	Same tests, terminal conditions and limits as for subgroup 1, except T_A =-55°C and V_{IC} tests are omitted.																				
9	t_{PHL}	3003	47	IN	OUT		5.0 V							GND	2.4 V	2.4 V	2.4 V	1A to 1Y	2	12	ns
T_A = +25°C		(Fig. 3)	48				"		IN	2.4 V	2.4 V	2.4 V	OUT	"			"	2A to 2Y	"	"	"
t	PLH	3003	49	IN	OUT		"							"	2.4 V	2.4 V	2.4 V	1A to 1Y	2	12	"
		(Fig. 3)	50				"		IN	2.4 V	2.4 V	2.4 V	OUT	"			"	2A to 2Y	"	"	"
10	t_{PHL}	3003	51	IN	OUT		5.0 V							GND	2.4 V	2.4 V	2.4 V	1A to 1Y	2	14	"
T_A = +125°C		(Fig. 3)	52				"		IN	2.4 V	2.4 V	2.4 V	OUT	"			"	2A to 2Y	"	"	"
t	PLH	3003	53	IN	OUT		"							"	2.4 V	2.4 V	2.4 V	1A to 1Y	2	15	"
		(Fig. 3)	54				"		IN	2.4 V	2.4 V	2.4 V	OUT	"			"	2A to 2Y	"	"	"
11	t_{PHL}	3003	55	IN	OUT		5.0 V							GND	2.4 V	2.4 V	2.4 V	1A to 1Y	2	16	"
T_A = -55°C		(Fig. 3)	56				"		IN	2.4 V	2.4 V	2.4 V	OUT	"			"	2A to 2Y	"	"	"
t	PLH	3003	57	IN	OUT		"							"	2.4 V	2.4 V	2.4 V	1A to 1Y	2	13	"
		(Fig. 3)	58				"		IN	2.4 V	2.4 V	2.4 V	OUT	"			"	2A to 2Y	"	"	"

TABLE III. Group A inspection for device type 03.

Terminal conditions (pins not designated may be high ≥ 2.0 V, low ≤ 0.8 V, or open)

Subgroup	Symbol	MIL-STD-883 method	Cases A,B,D	1	2	3	4	5	6	7	8	9	10	11	12	13	14	Measured terminal	Limits		Unit
			Case C	1	2	12	14	6	3	4	5	9	10	7	11	8	13		Min	Max	
			Test no.	1A	1B	1Y	V_{CC}	2Y	2A	2B	2C	3A	3B	GND	3C	3Y	1C				
1	V_{OL}	3007	1	2.0 V	2.0 V	20 mA	4.5 V		5.5 V	5.5 V	5.5 V	5.5 V	5.5 V	GND	5.5 V		2.0V	1Y		0.4	V
T_A = +25°C	"	"	2	5.5 V	5.5 V		4.5 V	20 mA	2.0 V	2.0 V	2.0 V	5.5 V	5.5 V		5.5 V		5.5 V	2Y		"	"
	"	"	3	"	"		4.5 V		5.5 V	5.5 V	5.5 V	2.0 V	2.0 V		2.0 V	20 mA	"	3Y		"	"
V	OH	3006	4	0.8 V	5.5 V	-.5 mA	4.5 V		5.5 V	5.5 V	5.5 V	5.5 V	5.5 V	"	5.5 V		"	1Y	2.4		"
		"	5	5.5 V	0.8 V	-.5 mA	4.5 V		"	"	"	"	"	"	"		"	1Y	"		"
		"	6	"	5.5 V	-.5 mA	4.5 V		"	"	"	"	"	"	"		0.8 V	1Y	"		"
		"	7	"			"	-.5 mA	0.8 V	"	"	"	"	"	"		5.5 V	2Y	"		"
		"	8	"			"	-.5 mA	5.5 V	0.8 V	"	"	"	"	"		"	2Y	"		"
		"	9	"			"	-.5 mA		5.5 V	0.8 V	"	"	"	"		"	2Y	"		"
		"	10	"			"		"	"	5.5 V	0.8 V	"	"	"	-.5 mA	"	3Y	"		"
		"	11	"			"		"	"	"	5.5 V	0.8 V	"	"	-.5 mA	"	3Y	"		"
		"	12				"		"	"	"	5.5 V	5.5 V	"	0.8 V	-.5 mA	"	3Y	"		
I	OS	3011	13	GND	GND	GND	5.5 V							GND			GND	1Y	-40	-100	mA
		"	14				"	GND	GND	GND	GND			"				2Y	"	"	"
		"	15				"					GND	GND	"	GND	GND		3Y	"	"	"
I	IH1	3010	16	2.4 V	GND		5.5 V		GND	GND	GND	GND	GND	GND	GND		GND	1A		50	µA
		"	17	GND	2.4 V		"		"	"	"	"	"	"	"		GND	1B		"	"
		"	18	"	GND		"		"	"	"	"	"	"	"		2.4 V	1C		"	"
		"	19	"	"		"		2.4 V	"	"	"	"	"	"		GND	2A		"	"
		"	20	"	"		"		GND	2.4 V	"	"	"	"	"		"	2B		"	"
		"	21	"	"		"		"	GND	2.4 V	"	"	"	"		"	2C		"	"
		"	22	"	"		"		"	"	GND	2.4 V	"	"	"		"	3A		"	"
		"	23	"	"		"		"	"	"	GND	2.4 V	"	"		"	3B		"	"
		"	24	"	"		"		'	"	"	"	GND	"	2.4 V			3C			
I	I H 2	"	25	5.5 V	GND		5.5 V			"	"	"	"	GND	GND		"	1A		100	"
		"	26	GND	5.5 V		"			"	"	"	"	"	"		"	1B		"	"
		"	27	"	GND		"			"	"	"	"	"	"		5.5 V	1C		"	"
		"	28	"	"		"		5.5 V	"	"	"	"	"	"		GND	2A		"	"
		"	29	"	"		"		GND	5.5 V	"	"	"	"	"		"	2B		"	"
		"	30	"	"		"		"	GND	5.5 V	"	"	"	"		"	2C		"	"
		"	31	"	"		"		"	"	GND	5.5 V	"	"	"		"	3A		"	"
		"	32	"	"		"		"	"	"	GND	5.5 V	"	"		"	3B		"	"
		"	33	"					"	"	"	GND	GND	"	5.5 V		"	3C			
I	I L	3009	34	0.4 V	5.5 V		5.5 V		5.5 V	5.5 V	5.5 V	5.5 V	5.5 V	GND	5.5 V		5.5 V	1A	-1.0	-2.0	mA
		"	35	5.5 V	0.4 V		"		"	"	"	"	"	"	"		5.5 V	1B	"	"	"
		"	36	"	5.5 V		"		"	"	"	"	"	"	"		0.4 V	1C	"	"	"
		"	37	"	"		"		0.4 V	"	"	"	"	"	"		5.5 V	2A	"	"	"
		"	38	"	"		"		5.5 V	0.4 V	"	"	"	"	"		"	2B	"	"	"
		"	39	"	"		"		"	5.5 V	0.4 V	"	"	"	"		"	2C	"	"	"
		"	40	"	"		"		"	"	5.5 V	0.4 V	"	"	"		"	3A	"	"	"
		"	41	"	"		"		"	"	"	5.5 V	0.4 V	"	"		"	3B	"	"	"
			42	"	"		"		"	"	"	"	5.5 V	"	0.4 V		"	3C	"	"	"
I	CCH	3005	43	GND	GND		5.5 V		GND	GND	GND	GND	GND	"	GND		GND	V_{CC}		12.6	mA
I	CCL	3005	44	5.5 v	5.5 v		5.5 V		5.5 V	5.5 V	5.5 V	5.5 V	5.5 V	"	5.5 V		5.5 V	V_{CC}		30	"

TABLE III. Group A inspection for device type 03 – Continued.

Terminal conditions (pins not designated may be high ≥ 2.0 V, low ≤ 0.8 V, or open)

Subgroup	Symbol	MIL-STD-883 method	Cases A,B,D	1	2	3	4	5	6	7	8	9	10	11	12	13	14	Measured terminal	Limits		Unit
			Case C	1	2	12	14	6	3	4	5	9	10	7	11	8	13		Min	Max	
			Test no.	1A	1B	1Y	V_{CC}	2Y	2A	2B	2C	3A	3B	GND	3C	3Y	1C				
1	V_{IC}		45	-12 mA			4.5 V							GND				1A		-1.5	V
T_A = +25°C			46		-12 mA		"							"				1B		"	"
			47				"							"			-12 mA	1C		"	"
			48				"		-12 mA					"				2A		"	"
			49				"			-12 mA				"				2B		"	"
			50				"				-12 mA			"				2C		"	"
			51				"					-12 mA		"				3A		"	"
			52				"						-12 mA	"				3B		"	"
			53				"							"	-12 mA			3C		"	"
2	Same tests, terminal conditions and limits as for subgroup 1, except T_A = +125°C and V_{IC} tests are omitted.																				
3	Same tests, terminal conditions and limits as for subgroup 1, except T_A = -55°C and V_{IC} tests are omitted.																				
9	t_{PHL}	3003	54	IN	2.4 V	OUT	5.0 V							GND			2.4 V	1A to 1Y	2	12	ns
T_A = +25°C		(Fig. 3)	55				"	OUT	IN	2.4 V	2.4 V			"				2A to 2Y	"	"	"
		"	56				"					IN	2.4 V	"	2.4 V	OUT		3A to 3Y	"	"	"
t	PLH	3003	57	IN	2.4 V	OUT	"							"			2.4 V	1A to 1Y	2	12	"
		(Fig. 3)	58				"	OUT	IN	2.4 V	2.4 V			"				2A to 2Y	"	"	"
		"	59				"					IN	2.4 V	"	2.4 V	OUT		3A to 3Y	"	"	"
10	t_{PHL}	3003	60	IN	2.4 V	OUT	"							"			2.4 V	1A to 1Y	2	14	"
T_A = +125°C		(Fig. 3)	61				"	OUT	IN	2.4 V	2.4 V			"				2A to 2Y	"	"	"
		"	62				"					IN	2.4 V	"	2.4 V	OUT		3A to 3Y	"	"	"
t	PLH	3003	63	IN	2.4 V	OUT	"							"			2.4 V	1A to 1Y	2	15	"
		(Fig. 3)	64				"	OUT	IN	2.4 V	2.4 V			"				2A to 2Y	"	"	"
		"	65				"					IN	2.4 V	"	2.4 V	OUT		3A to 3Y	"	"	"
11	t_{PHL}	3003	66	IN	2.4 V	OUT	"							"			2.4 V	1A to 1Y	2	16	"
T_A = -55°C		(Fig. 3)	67				"	OUT	IN	2.4 V	2.4 V			"				2A to 2Y	"	"	"
		"	68				"					IN	2.4 V	"	2.4 V	OUT		3A to 3Y	"	"	"
t	PLH	3003	69	IN	2.4 V	OUT	"							"			2.4 V	1A to 1Y	2	13	"
		(Fig. 3)	70				"	OUT	IN	2.4 V	2.4 V			"				2A to 2Y	"	"	"
		"	71				"					IN	2.4 V	"	2.4 V	OUT		3A to 3Y	"	"	"

TABLE III. Group A inspection for device type 04 .

Terminal conditions (pins not designated may be high ≥ 2.0 V, low ≤ 0.8 V, or open)

Subgroup	Symbol	MIL-STD-883 method	Cases A,B,D	1	2	3	4	5	6	7	8	9	10	11	12	13	14	Measured terminal	Limits		Unit
			Case C	1	2	3	14	6	4	5	8	9	10	7	12	13	11		Min	Max	
			Test no.	1A	1B	1Y	V_{CC}	2Y	2A	2B	3Y	3A	3B	GND	4A	4B	4Y				
1	V_{OL}	3007	1	2.0 V	2.0 V	20 mA	4.5 V		5.5 V	5.5 V		5.5 V	5.5 V	GND	5.5 V	5.5 V		1Y		0.4	V
T_A = +25°C	"	"	2	5.5 V	5.5 V		"	20 mA	2.0 V	2.0 V		5.5 V	5.5 V	"	5.5 V	5.5 V		2Y		"	"
	"	"	3	"	"		"		5.5 V	5.5 V	20 mA	2.0 V	2.0 V	"	5.5 V	5.5 V		3Y		"	"
	"		4	"	"		"		5.5 V	5.5 V		5.5 v	5.5 v	"	2.0 V	2.0 V	20 mA	4Y		"	
V	OH	3006	5	0.8 V	5.5 V	-.5 mA	4.5 V		5.5 V	5.5 V		5.5 V	5.5 V	"	5.5 V	5.5 V		1Y	2.4		"
		"	6	5.5 V	0.8 V	-.5 mA	"		"	"	"	"	"	"	"	"		1Y	"		"
		"	7	"	5.5 V		"	-.5 mA	0.8 V	"	"	"	"	"	"	"		1Y	"		"
		"	8	"			"	-.5 mA	5.5 V	0.8 V	"	"	"	"	"	"		2Y	"		"
		"	9	"			"		"	5.5 V	-.5 mA	0.8 V	5.5 V	"	"	"		2Y	"		"
		"	10	"			"		"	"	-.5 mA	5.5 V	0.8 V	"	"	"		2Y	"		"
		"	11	"			"		"	"		"	5.5 V	"	0.8 V	5.5 V	-.5 mA	3Y	"		"
		"	12	"			"		"	"		"	"	"	5.5 V	0.8 V	-.5 mA	3Y	"		"
I	OS	3011	13	GND	GND	GND	5.5 V							GND				1Y	-40	-100	mA
		"	14				"	GND	GND	GND				"				2Y	"	"	"
		"	15				"				GND	GND	GND	"				3Y	"	"	"
			16				"								GND	GND	GND	4Y	"	"	"
I	IH1	3010	17	2.4 V	GND		5.5 V		GND	GND		GND	GND	GND	GND	GND		1A		50	µA
		"	18	GND	2.4 V		"		GND	"		"	"	"	"	"		1B		"	"
		"	19	"	GND		"		2.4 V	"		"	"	"	"	"		2A		"	"
		"	20	"	"		"		GND	2.4 V		"	"	"	"	"		2B		"	"
		"	21	"	"		"		"	GND		2.4 V	"	"	"	"		3A		"	"
		"	22	"	"		"		"	"		GND	2.4 V	"	"	"		3B		"	"
		"	23	"	"		"		"	"		"	GND	"	2.4 V	"		4A		"	"
		"	24	"	"		"		"	"		"	"	"	GND	2.4 v		4B		"	"
I	I H 2	"	25	5.5 V	GND		5.5 V		"	"		"	"	GND	GND	GND		1A		100	"
		"	26	GND	5.5 V		"		"	"		"	"	"	"	"		1B		"	"
		"	27	"	GND		"		5.5 V	"		"	"	"	"	"		2A		"	"
		"	28	"	"		"		GND	5.5 V		"	"	"	"	"		2B		"	"
		"	29	"	"		"		"	GND		5.5 V	"	"	"	"		3A		"	"
		"	30	"	"		"		"	"		GND	5.5 V	"	"	"		3B		"	"
		"	31	"	"		"		"	"		"	GND	"	5.5 V	"		4A		"	"
		"	32	"	"		"		"	"		"	"	"	GND	5.5 V		4B		"	"
I	I L	3009	33	0.4 V	5.5 V		5.5 V		5.5 V	5.5 V		5.5 V	5.5 V	GND	5.5 V	5.5 V		1A	-1.0	-2.0	mA
		"	34	5.5 V	0.4 V		"		"	"		"	"	"	"	"		1B	"	"	"
		"	35	"	5.5 V		"		0.4 V	"		"	"	"	"	"		2A	"	"	"
		"	36	"	"		"		5.5 V	0.4 V		"	"	"	"	"		2B	"	"	"
		"	37	"	"		"		"	5.5 V		0.4 V	5.5 V	"	"	"		3A	"	"	"
		"	38	"	"		"		"	"		5.5 V	0.4 V	"	"	"		3B	"	"	"
		"	39	"	"		"		"	"		"	5.5 V	"	0.4 V	"		4A	"	"	"
		"	40	"	"		"		"	"		"	5.5 V	"	5.5 V	0.4 V		4B	"	"	"
I	CCH	3005	41	GND	GND		5.5 V		GND	GND		GND	GND	GND	GND	GND		V_{CC}		16.8	mA
I	CCL	3005	42	5.5 V	5.5 V		5.5 V		5.5 V	5.5 V		5.5 V	5.5 V	GND	5.5 V	5.5 V		V_{CC}		40	mA

TABLE III. Group A inspection for device type 04 – Continued.

Terminal conditions (pins not designated may be high ≥ 2.0 V, low ≤ 0.8 V, or open)

Subgroup	Symbol	MIL-STD-883 method	Cases A,B,D	1	2	3	4	5	6	7	8	9	10	11	12	13	14	Measured terminal	Limits		Unit
			Case C	1	2	3	14	6	4	5	8	9	10	7	12	13	11		Min	Max	
			Test no.	1A	1B	1Y	V_{CC}	2Y	2A	2B	3Y	3A	3B	GND	4A	4B	4Y				
1	V_{IC}		43	-12 mA			4.5 V							GND				1A		-1.5	V
T_A = +25°C			44		-12 mA		"							"				1B		"	"
			45				"		-12 mA					"				2A		"	"
			46				"			-12 mA				"				2B		"	"
			47				"					-12 mA		"				3A		"	"
			48				"						-12 mA	"				3B		"	"
			49				"							"	-12 mA			4A		"	"
			50				"							"		-12 mA		4B		"	"
2	Same tests, terminal conditions and limits as for subgroup 1, except T_A = +125°C and V_{IC} tests are omitted.																				
3	Same tests, terminal conditions and limits as for subgroup 1, except T_A = -55°C and V_{IC} tests are omitted.																				
9	t_{PHL}	3003	51	IN	2.4 V	OUT	5.0 V							GND				1A to 1Y	2	12	ns
T_A = +25°C		(Fig. 3)	52				"	OUT	IN	2.4 V				"				2A to 2Y	"	"	"
		"	53				"				OUT	IN	2.4 V	"				3A to 3Y	"	"	"
		"	54				"								IN	2.4 V	OUT	4A to 4Y			
t	$_{PLH}$	3003	55	IN	2.4 V	OUT	"							"				1A to 1Y	2	12	"
		(Fig. 3)	56				"	OUT	IN	2.4 V				"				2A to 2Y	"	"	"
		"	57				"				OUT	IN	2.4 V	"				3A to 3Y	"	"	"
		"	58				"								IN	2.4 V	OUT	4A to 4Y			
10	t_{PHL}	3003	59	IN	2.4 V	OUT	5.0 V							GND				1A to 1Y	2	14	ns
T_A = +125°C		(Fig. 3)	60				"	OUT	IN	2.4 V				"				2A to 2Y	"	"	"
		"	61				"				OUT	IN	2.4 V	"				3A to 3Y	"	"	"
		"	62				"								IN	2.4 V	OUT	4A to 4Y			
t	$_{PLH}$	3003	63	IN	2.4 V	OUT	"							"				1A to 1Y	2	15	"
		(Fig. 3)	64				"	OUT	IN	2.4 V				"				2A to 2Y	"	"	"
		"	65				"				OUT	IN	2.4 V	"				3A to 3Y	"	"	"
		"	66				"								IN	2.4 V	OUT	4A to 4Y			
11	t_{PHL}	3003	67	IN	2.4 V	OUT	5.0 V							GND				1A to 1Y	2	16	ns
T_A = -55°C		(Fig. 3)	68				"	OUT	IN	2.4 V				"				2A to 2Y	"	"	"
		"	69				"				OUT	IN	2.4 V	"				3A to 3Y	"	"	"
		"	70				"								IN	2.4 V	OUT	4A to 4Y			
t	$_{PLH}$	3003	71	IN	2.4 V	OUT	"							"				1A to 1Y	2	13	"
		(Fig. 3)	72				"	OUT	IN	2.4 V				"				2A to 2Y	"	"	"
		"	73				"				OUT	IN	2.4 V	"				3A to 3Y	"	"	"
		"	74				"								IN	2.4 V	OUT	4A to 4Y			

TABLE III. Group A inspection for device type 05.

Terminal conditions (pins not designated may be high ≥ 2.0 V, low ≤ 0.8 V, or open)

Subgroup	Symbol	MIL-STD-883 method	Cases A,B,D	1	2	3	4	5	6	7	8	9	10	11	12	13	14	Measured terminal	Limits		Unit
			Case C	1	4	3	14	5	6	9	8	11	10	7	12	13	2		Min	Max	
			Test no.	1A	2Y	2A	V_{CC}	3A	3Y	4A	4Y	5A	5Y	GND	6Y	6A	1Y				
1	V_{OL}	3007	1	2.0 V		5.5 V	4.5 V	5.5 V		5.5 V		5.5 V		GND		5.5 V	20 mA	1Y		0.4	V
T_A = +25°C		"	2	5.5 V	20 mA	2.0 V	"	5.5 V		"		5.5 V		"		"		2Y		"	"
		"	3	"		5.5 V	"	2.0 V	20 mA	"		"		"		"		3Y		"	"
		"	4	"		"	"	5.5 V		2.0 V	20 mA	"		"		"		4Y		"	"
		"	5			"	"	"		5.5 V		2.0 V	20 mA	"		"		5Y		"	"
		"	6			"	"	"		"		5.5 v		"	20 mA	2.0 V		6Y		"	"
V	OH	3006	7	0.8 V		5.5 V	4.5 V			5.5 V		5.5 V		"		5.5 V	-.5 mA	1Y	2.4		"
		"	8	5.5 V	-.5 mA	0.8 V	"			"		"		"		"		2Y	"		"
		"	9	"		5.5 V	"	0.8 V	-.5 mA	"		"		"		"		3Y	"		"
		"	10	"			"	5.5 V		0.8 V	-.5 mA	"		"		"		4Y	"		"
		"	11	"			"			5.5 V		0.8 V	-.5 mA	"		"		5Y	"		"
		"	12	"			"			5.5 V		5.5 V		"	-.5 mA	0.8 V		6Y	"		"
I	OS	3011	13	GND			5.5 V							GND			GND	1Y	-40	-100	mA
		"	14		GND	GND	"							"				2Y	"	"	"
		"	15				"	GND	GND					"				3Y	"	"	"
		"	16				"			GND	GND			"				4Y	"	"	"
		"	17				"					GND	GND	"				5Y			
		"	18				"							"	GND	GND		6Y			
I	IH1	3010	19	2.4 V		GND	5.5 V	GND		GND		GND		GND		GND		1A		50	µA
		"	20	GND		2.4 V	"	GND		"		"		"		"		2A		"	"
		"	21	"		GND	"	2.4 V		"		"		"		"		3A		"	"
		"	22	"		"	"	GND		2.4 V		"		"		"		4A		"	"
		"	23	"		"	"	"		GND		2.4 V		"		"		5A		"	"
		"	24	"		"	"	"		"		GND		"		2.4 V		6A		"	"
I	I H 2	"	25	5.5 V		GND	5.5 V	GND		"		"		GND		GND		1A		100	"
		"	26	GND		5.5 V	"	GND		"		"		"		"		2A		"	"
		"	27	"		GND	"	5.5 V		"		"		"		"		3A		"	"
		"	28	"		"	"	"		5.5 V		"		"		"		4A		"	"
		"	29	"		"	"	"		GND		5.5 V		"		"		5A		"	"
		"	30	"		"	"	"		"		GND		"		5.5 V		6A		"	"
I	I L	3009	31	0.4 V		5.5 V	5.5 V	5.5 V		5.5 V		5.5 V		GND		5.5 V		1A	-1.0	-2.0	mA
		"	32	5.5 V		0.4 V	"	"		"		"		"		"		2A	"	"	"
		"	33	"		5.5 V	"	0.4 V		"		"		"		"		3A	"	"	"
		"	34	"		"	"	5.5 V		0.4 V		"		"		"		4A	"	"	"
		"	35	"		"	"	"		5.5 V		0.4 V		"		"		5A	"	"	"
		"	36	"		"	"	"		"		5.5 V		"		0.4 V		6A	"	"	"
I	CCL	3005	37	5.5 V		5.5 V	5.5 V	5.5 V		5.5 V		5.5 V		GND		5.5 V		V_{CC}		60	mA
I	CCH	3005	38	GND		GND	5.5 V	GND		GND		GND		"		GND		V_{CC}		26	mA
V	IC		39	-12 mA			4.5 V							GND				1A		-1.5	V
			40			-12 mA	"							"				2A		"	"
			41				"	-12 mA						"				3A		"	"
			42				"			-12 mA				"				4A		"	"
			43				"					-12 mA		"				5A		"	"
			44				"							"		-12 mA		6A		"	"
2	Same tests, terminal conditions and limits as for subgroup 1, except T_A = +125°C and V_{IC} tests are omitted.																				
3	Same tests, terminal conditions and limits as for subgroup 1, except T_A = -55°C and V_{IC} tests are omitted.																				

TABLE III. Group A inspection for device type 05 – Continued.

Terminal conditions (pins not designated may be high ≥ 2.0 V, low ≤ 0.8 V, or open)

Subgroup	Symbol	MIL-STD-883 method	Cases A,B,D	1	2	3	4	5	6	7	8	9	10	11	12	13	14	Measured terminal	Limits		Unit
			Case C	1	4	3	14	5	6	9	8	11	10	7	12	13	2		Min	Max	
			Test no.	1A	2Y	2A	V_{CC}	3A	3Y	24A	4Y	5A	5Y	GND	6Y	6A	1Y				
9	t_{PHL}	3003	45	IN			5.0 V							GND			OUT	1A to 1Y	2	12	ns
T_A = +25°C		(Fig. 3)	46		OUT	IN	"							"				2A to 2Y	"	"	"
		"	47				"	IN	OUT					"				3A to 3Y	"	"	"
		"	48				"			IN	OUT			"				4A to 4Y	"	"	"
		"	49				"					IN	OUT	"				5A to 5Y	"	"	"
		"	50				"							"	OUT	IN		6A to 6Y	"	"	"
t	PLH	3003	51	IN			5.0 V							GND			OUT	1A to 1Y	2	12	"
		(Fig. 3)	52		OUT	IN	"							"				2A to 2Y	"	"	"
		"	53				"	IN	OUT					"				3A to 3Y	"	"	"
		"	54				"			IN	OUT			"				4A to 4Y			"
		"	55				"					IN	OUT	"				5A to 5Y			"
		"	56				"							"	OUT	IN		6A to 6Y			"
10	t_{PHL}	3003	57	IN			5.0 V							GND			OUT	1A to 1Y	2	14	ns
T_A = +125°C		(Fig. 3)	58		OUT	IN	"							"				2A to 2Y	"	"	"
		"	59				"	IN	OUT					"				3A to 3Y	"	"	"
		"	60				"			IN	OUT			"				4A to 4Y	"	"	"
		"	61				"					IN	OUT	"				5A to 5Y	"	"	"
		"	62				"							"	OUT	IN		6A to 6Y	"	"	"
t	PLH	3003	63	IN			5.0 V							GND			OUT	1A to 1Y	2	15	"
		(Fig. 3)	64		OUT	IN	"							"				2A to 2Y	"	"	"
		"	65				"	IN	OUT					"				3A to 3Y	"	"	"
		"	66				"			IN	OUT			"				4A to 4Y	"	"	"
		"	67				"					IN	OUT	"				5A to 5Y	"	"	"
		"	68				"							"	OUT	IN		6A to 6Y	"	"	"
11	t_{PHL}	3003	69	IN			5.0 V							GND			OUT	1A to 1Y	2	16	ns
T_A = -55°C		(Fig. 3)	70		OUT	IN	"							"				2A to 2Y	"	"	"
		"	71				"	IN	OUT					"				3A to 3Y	"	"	"
		"	72				"			IN	OUT			"				4A to 4Y	"	"	"
		"	73				"					IN	OUT	"				5A to 5Y	"	"	"
		"	74				"							"	OUT	IN		6A to 6Y	"	"	"
t	PLH	3003	75	IN			5.0 V							GND			OUT	1A to 1Y	2	13	"
		(Fig. 3)	76		OUT	IN	"							"				2A to 2Y	"	"	"
		"	77				"	IN	OUT					"				3A to 3Y	"	"	"
		"	78				"			IN	OUT			"				4A to 4Y	"	"	"
		"	79				"					IN	OUT	"				5A to 5Y	"	"	"
		"	80				"							"	OUT	IN		6A to 6Y	"	"	"

TABLE III. Group A inspection for device type 06.

Terminal conditions (pins not designated may be high ≥ 2.0 V, low ≤ 0.8 V, or open)

Subgroup	Symbol	MIL-STD-883 method	Cases A,B,D	1	2	3	4	5	6	7	8	9	10	11	12	13	14	Measured terminal	Limits		Unit
			Case C	1	2	3	14	6	4	5	8	9	10	7	12	13	11		Min	Max	
			Test no.	1A	1B	1Y	V_{CC}	2Y	2A	2B	3Y	3A	3B	GND	4A	4B	4Y				
1	V_{OL}	3007	1	2.0 V	2.0 V	20 mA	4.5 V		5.5 V	5.5 V		5.5 V	5.5 V	GND	5.5 V	5.5 V		1Y		0.4	V
T_A = +25°C	"	"	2	5.5 V	5.5 V		"	20 mA	2.0 V	2.0 V		5.5 V	5.5 V	"	"	"		2Y		"	"
	"	"	3	"	"		"		5.5 V	5.5 V	20 mA	2.0 V	2.0 V	"	"	"		3Y		"	"
	"	"	4	"	"		"		"	"		5.5 V	5.5 V	"	2.0 V	2.0 V	20 mA	4Y		"	"
I	CEX		5	0.8 V	4.5 V	5.5 V	4.5 V		5.5 V	5.5 V		5.5 V	5.5 V	"	5.5 V	5.5 V		1Y		250	µA
			6	4.5 V	0.8 V	5.5 V	"		"	"		"	"	"	"	"		1Y		"	"
			7	5.5 V	5.5 V		"	5.5 V	0.8 V	4.5 V		"	"	"	"	"		2Y		"	"
			8	"	"		"	5.5 V	4.5 V	0.8 V		"	"	"	"	"		2Y		"	"
			9	"	"		"		5.5 V	5.5 V	5.5 V	0.8 V	4.5 V	"	"	"		3Y		"	"
			10	"	"		"		"	"	5.5 V	4.5 V	0.8 V	"	"	"		3Y		"	"
			11	"	"		"		"	"		5.5 V	5.5 V	"	0.8 V	4.5 V	5.5 V	4Y		"	"
			12	"	"		"		"	"		5.5 V	5.5 V	"	4.5 V	0.8 V	5.5 V	4Y		"	"
V	IC		13	-12 mA			4.5 V							GND				1A		-1.5	V
			14		-12 mA		"							"				1B		"	"
			15				"		-12 mA					"				2A		"	"
			16				"			-12 mA				"				2B		"	"
			17				"					-12 mA		"				3A		"	"
			18				"						-12 mA	"				3B		"	"
			19				"								-12 mA			4A		"	"
			20				"									-12 mA		4B		"	"
I	IH1	3010	21	2.4 V	GND		5.5 V		GND	GND		GND	GND	GND	GND	GND		1A		50	µA
		"	22	GND	2.4 V		"		GND	"		"	"	"	"	"		1B		"	"
		"	23	"	GND		"		2.4 V	"		"	"	"	"	"		2A		"	"
		"	24	"	"		"		GND	2.4 V		"	"	"	"	"		2B		"	"
		"	25	"	"		"		"	GND		2.4 V	"	"	"	"		3A		"	"
		"	26	"	"		"		"	"		GND	2.4 V	"	"	"		3B		"	"
		"	27	"	"		"		"	"		"	GND	"	2.4 V	"		4A		"	"
		"	28	"	"		"		"	"		"	"	"	GND	2.4 V		4B		"	"
I	I H 2	"	29	5.5 V	GND		5.5 V		"	"		"	"	GND	GND	GND		1A		100	"
		"	30	GND	5.5 V		"		"	"		"	"	"	"	"		1B		"	"
		"	31	"	GND		"		5.5 V	"		"	"	"	"	"		2A		"	"
		"	32	"	"		"		GND	5.5 V		"	"	"	"	"		2B		"	"
		"	33	"	"		"		"	GND		5.5 V	"	"	"	"		3A		"	"
		"	34	"	"		"		"	"		GND	5.5 V	"	"	"		3B		"	"
		"	35	"	"		"		"	"		"	GND	"	5.5 V	"		4A		"	"
		"	36	"	"		"		"	"		"	"	"	GND	5.5 V		4B		"	"
I	I L	3009	37	0.4 V	5.5 V		5.5 V		5.5 V	5.5 V		5.5 V	5.5 V	GND	5.5 V	5.5 V		1A	-1.0	-2.0	mA
		"	38	5.5 V	0.4 V		"		"	"		"	"	"	"	"		1B	"	"	"
		"	39	"	5.5 V		"		0.4 V	"		"	"	"	"	"		2A	"	"	"
		"	40	"	"		"		5.5 V	0.4 V		"	"	"	"	"		2B	"	"	"
		"	41	"	"		"		"	5.5 V		0.4 V	"	"	"	"		3A	"	"	"
		"	42	"	"		"		"	"		5.5 V	0.4 V	"	"	"		3B	"	"	"
		"	43	"	"		"		"	"		"	5.5 V	"	0.4 V	"		4A	"	"	"
		"	44	"	"		"		"	"		"	"	"	5.5 V	0.4 V		4B	"	"	"
I	CCH	3005	45	GND	GND		5.5 V		GND	GND		GND	GND	GND	GND	GND		V_{CC}		16.8	mA
I	CCL	3005	46	5.5 V	5.5 V		5.5 V		5.5 V	5.5 V		5.5 V	5.5 V	5.5 V	5.5 V	5.5 V		V_{CC}		40	mA
2	Same tests, terminal conditions and limits as for subgroup 1, except T_C = +125°C and V_{IC} tests are omitted.																				
3	Same tests, terminal conditions and limits as for subgroup 1, except T_C = -55°C and V_{IC} tests are omitted.																				

TABLE III. Group A inspection for device type 06 – Continued.

Terminal conditions (pins not designated may be high ≥ 2.0 V, low ≤ 0.8 V, or open)

Subgroup	Symbol	MIL-STD-883 method	Cases A,B,D	1	2	3	4	5	6	7	8	9	10	11	12	13	14	Measured terminal	Limits		Unit
			Case C	1	2	3	14	6	4	5	8	9	10	7	12	13	11		Min	Max	
			Test no.	1A	1B	1Y	V_{CC}	2Y	2A	2B	3Y	3A	3B	GND	4A	4B	4Y				
9	t_{PHL}	3003	47	IN	2.4 V	OUT	5.0 V							GND				1A to 1Y	3	14	ns
T_A = +25°C		(Fig. 4)	48				"	OUT	IN	2.4 V				"				2A to 2Y	"	"	"
		"	49				"				OUT	IN	2.4 V	"				3A to 3Y	"	"	"
		"	50				"							"	IN	2.4 V	OUT	4A to 4Y	"	"	"
t	PLH	3003	51	IN	2.4 V	OUT	5.0 V							GND				1A to 1Y	3	17	"
		(Fig. 4)	52				"	OUT	IN	2.4 V				"				2A to 2Y	"	"	"
		"	53				"				OUT	IN	2.4 V	"				3A to 3Y	"	"	"
		"	54				"							"	IN	2.4 V	OUT	4A to 4Y	"	"	"
10	t_{PHL}	3003	55	IN	2.4 V	OUT	5.0 V							GND				1A to 1Y	3	16	ns
T_A = +125°C		(Fig. 4)	56				"	OUT	IN	2.4 V				"				2A to 2Y	"	"	"
		"	57				"				OUT	IN	2.4 V	"				3A to 3Y	"	"	"
		"	58				"							"	IN	2.4 V	OUT	4A to 4Y	"	"	"
t	PLH	3003	59	IN	2.4 V	OUT	5.0 V							GND				1A to 1Y	3	21	"
		(Fig. 4)	60				"	OUT	IN	2.4 V				"				2A to 2Y	"	"	"
		"	61				"				OUT	IN	2.4 V	"				3A to 3Y	"	"	"
		"	62				"							"	IN	2.4 V	OUT	4A to 4Y	"	"	"
11	t_{PHL}	3003	63	IN	2.4 V	OUT	5.0 V							GND				1A to 1Y	3	18	ns
T_A = -55°C		(Fig. 4)	64				"	OUT	IN	2.4 V				"				2A to 2Y	"	"	"
		"	65				"				OUT	IN	2.4 V	"				3A to 3Y	"	"	"
		"	66				"							"	IN	2.4 V	OUT	4A to 4Y	"	"	"
t	PLH	3003	67	IN	2.4 V	OUT	5.0 V							GND				1A to 1Y	3	19	"
		(Fig. 4)	68				"	OUT	IN	2.4 V				"				2A to 2Y	"	"	"
		"	69				"				OUT	IN	2.4 V	"				3A to 3Y	"	"	"
		"	70				"							"	IN	2.4 V	OUT	6A to 6Y	"	"	"

TABLE III. Group A inspection for device type 07.

Terminal conditions (pins not designated may be high ≥ 2.0 V, low ≤ 0.8 V, or open)

Subgroup	Symbol	MIL-STD-883 method	Cases A,B,D	1	2	3	4	5	6	7	8	9	10	11	12	13	14	Measured terminal	Limits		Unit
			Case C	1	6	3	14	11	9	10	12	13	8	7	2	4	5		Min	Max	
			Test no.	1A	1Y	NC	V_{CC}	NC	2A	2B	2C	2D	2Y	GND	1B	1C	1D				
1	V_{OL}	3007	1	2.0 V	20 mA		4.5 V		5.5 V	5.5 V	5.5 V	5.5 V		GND	2.0 V	2.0 V	2.0 V	1Y		0.4	V
T_A = +25°C	"	"	2	5.5 V			"		2.0 V	2.0 V	2.0 V	2.0 V	20 mA	"	5.5 V	5.5 V	5.5 V	2Y		"	"
I	CEX		3	0.8 V	5.5 V		4.5 V		5.5 V	5.5 V	5.5 V	5.5 V		GND	5.5 V	5.5 V	5.5 V	1Y		250	µA
			4	5.5 V	"		"		"	"	"	"		"	0.8 V	5.5 V	5.5 V	1Y		"	"
			5	5.5 V	"		"		"	"	"	"		"	5.5 V	0.8 V	5.5 V	1Y		"	"
			6	"	5.5 V		"		"	"	"	"		"	"	5.5 V	0.8 V	1Y		"	"
			7	"			"		0.8 V	"	"	"	5.5 V	"	"	"	5.5 V	2Y		"	"
			8	"			"		5.5 V	0.8 V	"	"	"	"	"	"	"	2Y		"	"
			9	"			"		"	5.5 V	0.8 V	"	"	"	"	"	"	2Y		"	"
			10	"			"		"	5.5 V	5.5 V	0.8 V	"	"	"	"	"	2Y		"	"
V	IC		11	-12 mA			4.5 V							GND				1A		-1.5	V
			12				"							"	-12 mA			1B		"	"
			13				"							"		-12 mA		1C		"	"
			14				"							"			-12 mA	1D		"	"
			15				"		-12 mA					"				2A		"	"
			16				"			-12 mA				"				2B		"	"
			17				"				-12 mA			"				2C		"	"
			18				"					-12 mA		"				2D		"	"
I	IH1	3010	19	2.4 V			5.5 V		GND	GND	GND	GND		GND	GND	GND	GND	1A		50	µA
		"	20	GND			"		"	"	"	"		"	2.4 V	"	"	1B		"	"
		"	21	"			"		"	"	"	"		"	GND	2.4 V	"	1C		"	"
		"	22	"			"		"	"	"	"		"	"	GND	2.4 V	1D		"	"
		"	23	"			"		2.4 V	"	"	"		"	"	"	GND	2A		"	"
		"	24	"			"		GND	2.4 V	"	"		"	"	"	"	2B		"	"
		"	25	"			"		"	GND	2.4 V	"		"	"	"	"	2C		"	"
		"	26	"			"		"	GND	GND	2.4 V		"	"	"	"	2D		"	"
I	I H 2	"	27	5.5 V			5.5 V		GND	GND	GND	GND		GND	GND	GND	GND	1A		100	"
		"	28	GND			"		"	"	"	"		"	5.5 V	"	"	1B		"	"
		"	29	"			"		"	"	"	"		"	GND	5.5 V	"	1C		"	"
		"	30	"			"		"	"	"	"		"	"	GND	5.5 V	1D		"	"
		"	31	"			"		5.5 V	"	"	"		"	"	"	GND	2A		"	"
		"	32	"			"		GND	5.5 V	"	"		"	"	"	"	2B		"	"
		"	33	"			"		"	GND	5.5 V	"		"	"	"	"	2C		"	"
		"	34	"			"		"	GND	GND	5.5 V		"	"	"	"	2D		"	"
I	I L	3009	35	0.4 V			5.5 V		5.5 V	5.5 V	5.5 V	5.5 V		GND	5.5 V	5.5 V	5.5 V	1A	-1.0	-2.0	mA
		"	36	5.5 V			"		"	"	"	"		"	0.4 V	"	"	1B	"	"	"
		"	37	"			"		"	"	"	"		"	5.5 V	0.4 V	"	1C	"	"	"
		"	38	"			"		"	"	"	"		"	"	5.5 V	0.4 V	1D	"	"	"
		"	39	"			"		0.4 V	"	"	"		"	"	"	5.5 V	2A	"	"	"
		"	40	"			"		5.5 V	0.4 V	"	"		"	"	"	"	2B	"	"	"
		"	41	"			"		"	5.5 V	0.4 V	"		"	"	"	"	2C	"	"	"
		"	42	"			"		"	"	5.5 V	0.4 V		"	"	"	"	2D	"	"	"
I	CCL	3005	43	5.5 V			5.5 V		5.5 V	5.5 V	5.5 V	5.5 V		GND	5.5 V	5.5 V	5.5 V	V_{CC}		20	mA
I	CCH	3005	44	GND			5.5 V		GND	GND	GND	GND		GND	GND	GND	GND	V_{CC}		8.4	mA
2	Same tests, terminal conditions and limits as for subgroup 1, except T_A = +125°C and V_{IC} tests are omitted.																				
3	Same tests, terminal conditions and limits as for subgroup 1, except T_A = -55°C and V_{IC} tests are omitted.																				

TABLE III. Group A inspection for device type 07 – Continued.
Terminal conditions (pins not designated may be high ≥ 2.0 V, low ≤ 0.8 V, or open)

Subgroup	Symbol	MIL-STD-883 method	Cases A,B,D	1	2	3	4	5	6	7	8	9	10	11	12	13	14	Measured terminal	Limits		Unit
			Case C	1	6	3	14	11	9	10	12	13	8	7	2	4	5		Min	Max	
			Test no.	1A	1Y	NC	V_{CC}	NC	2A	2B	2C	2D	2Y	GND	1B	1C	1D				
9	t_{PHL}	3003	45	IN	OUT		5.0 V							GND	2.4 V	2.4 V	2.4 V	1A to 1Y	3	14	ns
T_A = +25°C	t_{PHL}	(Fig. 4)	46				“		IN	2.4 V	2.4 V	2.4 V	OUT	“				2A to 1Y	“	14	“
t	PLH	“	47	IN	OUT		“							“	2.4 V	2.4 V	2.4 V	1A to 1Y	“	17	“
t	PLH	“	48				“		IN	2.4 V	2.4 V	2.4 V	OUT	“				2A to 2Y	“	17	“
10	t_{PHL}	3003	49	IN	OUT		5.0 V							GND	2.4 V	2.4 V	2.4 V	1A to 1Y	3	16	“
T_A = +125°C	t_{PHL}	(Fig. 4)	50				“		IN	2.4 V	2.4 V	2.4 V	OUT	“				2A to 2Y	“	16	“
t	PLH	“	51	IN	OUT		“							“	2.4 V	2.4 V	2.4 V	1A to 1Y	“	21	“
t	PLH	“	52				“		IN	2.4 V	2.4 V	2.4 V	OUT	“				2A to 2Y	“	21	“
11	t_{PHL}	3003	53	IN	OUT		5.0 V							GND	2.4 V	2.4 V	2.4 V	1A to 1Y	3	18	“
T_A = -55°C	t_{PHL}	(Fig. 4)	54				“		IN	2.4 V	2.4 V	2.4 V	OUT	“				2A to 2Y	“	18	“
t	PLH	“	55	IN	OUT		“							“	2.4 V	2.4 V	2.4 V	1A to 1Y	“	19	“
t	PLH	“	56				“		IN	2.4 V	2.4 V	2.4 V	OUT	“				2A to 2Y	“	19	“

4.4 Technology Conformance inspection (TCI). Technology conformance inspection shall be in accordance with MIL-PRF-38535 and herein for groups A, B, C, and D inspections (see 4.4.1 through 4.4.4).

4.4.1 Group A inspection. Group A inspection shall be in accordance with table III of MIL-PRF-38535 and as follows:

a. Tests shall be as specified in table II herein.

b. Subgroups 4, 5, 6, 7, and 8 shall be omitted.

4.4.2 Group B inspection. Group B inspection shall be in accordance with table II of MIL-PRF-38535.

4.4.3 Group C inspection. Group C inspection shall be in accordance with table IV of MIL-PRF-38535 and as follows:

a. End point electrical parameters shall be as specified in table II herein.

b. The steady-state life test duration, test condition, and test temperature, or approved alternatives shall be as specified in the device manufacturer's QM plan in accordance with MIL-PRF-38535. The burn-in test circuit shall be maintained under document control by the device manufacturer's Technology Review Board (TRB) in accordance with MIL-PRF-38535 and shall be made available to the acquiring or preparing activity upon request. The test circuit shall specify the inputs, outputs, biases, and power dissipation, as applicable, in accordance with the intent specified in test method 1005 of MIL-STD-883.

4.4.4 Group D inspection. Group D inspection shall be in accordance with table V of MIL-PRF-38535. End point electrical parameters shall be as specified in table II herein.

4.5 Methods of inspection. Methods of inspection shall be specified and as follows.

4.5.1 Voltage and current. All voltage values given are referenced to the microcircuit ground terminals. Currents given are conventional current and positive when flowing into the referenced terminal.

5. PACKAGING

5.1 Packaging requirements. For acquisition purposes, the packaging requirements shall be as specified in the contract or order (see 6.2). When actual packaging of materiel is to be performed by DoD personnel, these personnel need to contact the responsible packaging activity to ascertain requisite packaging requirements. Packaging requirements are maintained by the Inventory Control Point's packaging activity within the Military Department of Defense Agency, or within the Military Department's System Command. Packaging data retrieval is available from the managing Military Department's or Defense Agency's automated packaging files, CD-ROM products, or by contacting the responsible packaging activity.

6. NOTES

6.1 Intended use. Microcircuits conforming to this specification are intended for original equipment design applications and logistic support of existing equipment.

6.2 Acquisition requirements. Acquisition documents should specify the following:

a. Title, number, and date of the specification.

b. Complete part number (see 1.2).

c. Requirements for delivery of one copy of the quality conformance inspection data pertinent to the device inspection lot to be supplied with each shipment by the device manufacturer, if applicable.

d. Requirements for certificate of compliance, if applicable.

e. Requirements for notification of change of product or process to acquiring activity in addition to notification of the qualifying activity, if applicable.

f. Requirements for failure analysis (including required test condition of MIL-STD-883, method 5003), corrective action and reporting of results, if applicable.

g. Requirements for product assurance options.

h. Requirements for special carriers, lead lengths, or lead forming, if applicable. These requirements should not affect the part number. Unless otherwise specified, these requirements will not apply to direct purchase by or direct shipment to the Government.

j. Requirements for "JAN" marking.

6.3 Superseding information. The requirements of MIL-M-38510 have been superseded to take advantage of the available Qualified Manufacturer Listing (QML) system provided by MIL-PRF-38535. Previous references to MIL-M-38510 in this document have been replaced by appropriate references to MIL-PRF-38535. All technical requirements now consist of this specification and MIL-PRF-38535. The MIL-M-38510 specification sheet number and PIN have been retained to avoid adversely impacting existing government logistics systems and contractor's parts lists.

6.4 Qualification. With respect to products requiring qualification, awards will be made only for products which are, at the time of award of contract, qualified for inclusion in Qualified Manufacturers List QML-38535 whether or not such products have actually been so listed by that date. The attention of the contractors is called to these requirements, and manufacturers are urged to arrange to have the products that they propose to offer to the Federal Government tested for qualification in order that they may be eligible to be awarded contracts or purchase orders for the products covered by this specification. Information pertaining to qualification of products may be obtained from DSCC-VQ, 3990 E. Broad Street, Columbus, Ohio 43123-1199.

6.5 Abbreviations, symbols, and definitions. The abbreviations, symbols, and definitions used herein are defined in MIL-PRF-38535 and MIL-STD-1331, and as follows:.

GND ..... Ground zero voltage potential.
V_{IN} ..... Voltage level at an input terminal
V_{IC} ..... Input clamp voltage
I_{IN} ..... Current flowing into an input terminal

6.6 Logistic support. Lead materials and finishes (see 3.3) are interchangeable. Unless otherwise specified, microcircuits acquired for Government logistic support will be acquired to device class B (see 1.2.2), lead material and finish A (see 3.4). Longer length leads and lead forming should not affect the part number.

6.7 Substitutability. The cross-reference information below is presented for the convenience of users. Microcircuits covered by this specification will functionally replace the listed generic-industry type. Generic-industry microcircuit types may not have equivalent operational performance characteristics across military temperature ranges or reliability factors equivalent to MIL-M-38510 device types and may have slight physical variations in relation to case size. The presence of this information should not be deemed as permitting substitution of generic-industry types for MIL-M-38510 types or as a waiver of any of the provisions of MIL-PRF-38535.

Military device type	Generic-industry type
01	54H30
02	54H20
03	54H10
04	54H00
05	54H04
06	54H01
07	54H22

6.8 Changes from previous issue. Asterisks are not used in this revision to identify changes with respect to the previous issue, due to the extensiveness of the changes.

Custodians:
Army – CR
Navy - EC
Air Force - 11
NASA - NA
DLA – CC

Review activities:
Army - MI, SM
Navy - AS, CG, MC, SH, TD
Air Force – 03, 19, 99

Preparing activity:
DLA - CC

Project 5962-1978

STANDARDIZATION DOCUMENT IMPROVEMENT PROPOSAL

INSTRUCTIONS

1. The preparing activity must complete blocks 1, 2, 3, and 8. In block 1, both the document number and revision letter should be given.

2. The submitter of this form must complete blocks 4, 5, 6, and 7, and send to preparing activity.

3. The preparing activity must provide a reply within 30 days from receipt of the form.

NOTE: This form may not be used to request copies of documents, nor to request waivers, or clarification of requirements on current contracts. Comments submitted on this form do not constitute or imply authorization to waive any portion of the referenced document(s) or to amend contractual requirements.

I RECOMMEND A CHANGE:	1. DOCUMENT NUMBER MIL-M-38510/23D	2. DOCUMENT DATE *(YYYYMMDD)* 2003/07/11

3. DOCUMENT TITLE

MICROCIRCUITS, DIGITAL, TTL, HIGH SPEED, NAND GATES, MONOLITHIC SILICON, PART NUMBER M38510/2301 THROUGH M38510/2307

4. NATURE OF CHANGE *(Identify paragraph number and include proposed rewrite, if possible. Attach extra sheets as needed.)*

5. REASON FOR RECOMMENDATION

6. SUBMITTER

a. NAME *(Last, First Middle Initial)*	b. ORGANIZATION	
c. ADDRESS *(Include Zip Code)*	d. TELEPHONE *(Include Area Code)* (1) Commercial (2) DSN *(If applicable)*	7. DATE SUBMITTED *(YYYYMMDD)*

8. PREPARING ACTIVITY

a. NAME Rick Officer	b. TELEPHONE *(Include Area Code* (1) Commercial 614-692-0518	(2) DSN 850-0518
c. ADDRESS *(Include Zip Code)* DSCC-VAS 3990 East Broad Street Columbus, Ohio 43216-5000	IF YOU DO NOT RECEIVE A REPLY WITHIN 45 DAYS, CONTACT: Defense Standardization Program Office (DLSC-LM) 8725 John J. Kingman Road, Suite 2533 Fort Belvoir, Virginia 22060-6221 Telephone (703)767-6888 DSN 427-6888	