INCH-POUND
MIL-M-38510/209H
21 April 2014
SUPERSEDING
MIL-M-38510/209G
13 September 2013

MILITARY SPECIFICATION

MICROCIRCUIT, DIGITAL, 8192-BIT, SCHOTTKY, BIPOLAR, PROGRAMMABLE READ-ONLY MEMORY (PROM), MONOLITHIC SILICON

Inactive for new design after 24 July 1995

This specification is approved for use by all Departments and Agencies of the Department of Defense.

The requirements for acquiring the product herein shall consist of this specification sheet and MIL-PRF-38535.

1. SCOPE

1.1 Scope. This specification covers the detail requirements for monolithic silicon, PROM microcircuits which employ thin film nichrome (NiCr) resistors, zapped vertical emitter, tungsten (W), titanium tungsten (TiW), or platinum silicide as the fusible link or programming element. Two product assurance class and a choice of case outlines and lead finishes are provided for each type and are reflected in the complete part number. For this product, the requirements of MIL-M-38510 have been superseded by MIL-PRF-38535, (see 6.4).

1.2 Part or Identifying Number (PIN). The PIN is in accordance with MIL-PRF-38535, and as specified herein.

1.2.1 Device types. The device types are as follows:

Device type	Circuit	Access time (ns)
01	2048 word / 4 bits per word PROM with uncommitted collector	125
02, 08, 10	2048 word / 4 bits per word PROM with active pullup and a third high-impedance state output	125, 90, 55
03	1024 word / 8 bits per word PROM with uncommitted collector	90
04, 09	1024 word / 8 bits per word PROM with active pullup and a third high-impedance state output	90, 55
05	1024 word / 8 bits per word PROM with active pullup and a third high-impedance state output	90
06	1024 word / 8 bits per word PROM with uncommitted collector	90

NOTE: Device type 07 was deleted from this document under revision D.

1.2.2 Device class. The device class is the product assurance level as defined in MIL-PRF-38535.

Comments, suggestions, or questions on this document should be addressed to: Commander, Defense Supply Center Columbus, ATTN: DLA Land and Maritime-VAS, P. O. Box 3990, Columbus, OH 43218-3990, or emailed to memory@dla.mil. Since contact information can change, you may want to verify the currency of this address information using the ASSIST Online database at https://assist.dla.mil

AMSC N/A FSC 5962

1.2.3 Case outlines. The case outlines are as designated in MIL-STD-1835 and as follows:

Outline letter	Descriptive designator	Terminals	Package style
J	GDIP1-T24 or CDIP2-T24	24	Dual-in-line
K	GDFP2-F24 or CDFP3-F24	24	Flat pack
V	GDIP1-T18 or CDIP2-T18	18	Dual-in-line
X	See figure 1	18	Flat pack
Y	GDFP2-F18	18	Flat pack

1.3 Absolute maximum ratings.

Supply voltage range ..... -0.5 V to +7.0 V
Input voltage range ..... -1.5 V at -10 mA to +5.5 V
Storage temperature range ..... -65°C to +150°C
Lead temperature (soldering, 10 seconds) ..... +300°C
Thermal resistance, junction to case (θ_{JC}) :
Cases J, K, V, and Y ..... See MIL-STD-1835 1/
Case X ..... 35°C/W maximum 1/
Output voltage ..... -0.5 V to $+V_{CC}$
Output sink current ..... 100 mA
Maximum power dissipation (P_D) :
Device types 01, 02, 08, and 10 ..... 950 mW 2/
Device types 03, 04, 05, 06, and 09 ..... 1.1 W 2/
Maximum junction temperature (T_J) ..... +175°C

1.4 Recommended operating conditions.

Supply voltage range ..... +4.5 V dc minimum to +5.5 V dc maximum
Minimum high-level input voltage (V_{IH}) ..... 2.0 V
Maximum low-level input voltage (V_{IL}) ..... 0.8 V
Normalized fanout (each output) :
Device types 01, 02, 08, and 10 ..... 12 mA 3/
Device types 03, 04, 05, 06, and 09 ..... 8 mA 3/
Case operating temperature range (T_C) ..... -55 °C to +125 °C

1/ Heat sinking is recommended to reduce the junction temperature.
2/ Must withstand the added P_D due to short circuit test (e.g. I_{OS}).
3/ 16 mA for circuits B, D, and F devices.

2. APPLICABLE DOCUMENTS

2.1 General. The documents listed in this section are specified in sections 3, 4, or 5 of this specification. This section does not include documents cited in other sections of this specification or recommended for additional information or as examples. While every effort has been made to ensure the completeness of this list, document users are cautioned that they must meet all specified requirements of documents cited in sections 3, 4, or 5 of this specification, whether or not they are listed.

2.2 Government documents.

2.2.1 Specifications and Standards. The following specifications and standards form a part of this specification to the extent specified herein. Unless otherwise specified, the issues of these documents are those cited in the solicitation or contract.

DEPARTMENT OF DEFENSE SPECIFICATIONS

MIL-PRF-38535 - Integrated Circuits (Microcircuits) Manufacturing, General Specification for.

DEPARTMENT OF DEFENSE STANDARDS

MIL-STD-883 - Test Method Standard for Microelectronics.
MIL-STD-1835 - Interface Standard Electronic Component Case Outline

(Copies of these documents are available online at http://quicksearch.dla.mil or from the Standardization Document Order Desk, 700 Robbins Avenue, Building 4D, Philadelphia, PA 19111-5094.)

2.3 Order of precedence. Unless otherwise noted herein or in the contract, in the event of a conflict between the text of this document and the references cited herein (except for related specification sheets), the text of this document takes precedence. Nothing in this document, however, supersedes applicable laws and regulations unless a specific exemption has been obtained.

3. REQUIREMENTS

3.1 Qualification. Microcircuits furnished under this specification shall be products that are manufactured by a manufacturer authorized by the qualifying activity for listing on the applicable qualified manufacturers list before contract award (see 4.3 and 6.3).

3.2 Item requirements. The individual item requirements shall be in accordance with MIL-PRF-38535 and as specified herein or as modified in the device manufacturer's Quality Management (QM) plan. The modification in the QM plan shall not affect the form, fit, or function as described herein.

3.3 Design, construction, and physical dimensions. The design, construction, and physical dimensions shall be as specified in MIL-PRF-38535 and herein.

3.3.1 Terminal connections. The terminal connections shall be as specified on figure 2.

3.3.2 Truth table.

3.3.2.1 Unprogrammed devices. The truth tables for unprogrammed devices for contracts involving no altered item drawing shall be as specified on figure 3. When required in groups A, B, or C inspection (see 4.4), the devices shall be programmed by the manufacturer prior to test in a checkerboard pattern (a minimum of 50 percent of the total number of bits programmed) or to any altered item drawing pattern which includes at least 25 percent of the total number of bits programmed.

3.3.2.2 Programmed devices. The truth table for programmed devices shall be as specified by the altered item drawing.

3.3.3 Functional block diagram. The functional block diagram shall be as specified on figure 4.

3.3.4 Case outlines. The case outlines shall be as specified in 1.2.3.

3.4 Lead material and finish. The lead material and finish shall be in accordance with MIL-PRF-38535 (see 6.6).

3.5 Electrical performance characteristics. The electrical performance characteristics are as specified in table I, and apply over the full recommended case operating temperature range, unless otherwise specified.

3.6 Electrical test requirements. The electrical test requirements shall be as specified in table II, and where applicable, the altered item drawing. The electrical tests for each subgroup are described in table III.

3.7 Marking. Marking shall be in accordance with MIL-PRF-38535. For programmed devices, the altered item drawing number shall be added to the marking by the programming activity.

3.8 Processing options. Since the PROM is an unprogrammed device capable of being programmed by either the manufacturer or the user to result in a wide variety of PROM configurations, two processing options are provided for selection in the contract, using an altered item drawing.

3.8.1 Unprogrammed PROM delivered to the user. All testing shall be verified through group A testing as defined in 3.3.2.1, table II, and table III. It is recommended that users perform subgroups 7 and 9 after programming to verify the specific program configuration.

3.8.2 Manufacturer-programmed PROM delivered to the user. All testing requirements and quality assurance provisions herein, including the requirements of the altered item drawing, shall be satisfied by the manufacturer prior to delivery.

3.9 Microcircuit group assignment. The devices covered by this specification shall be in microcircuit group number 14 (see Appendix A, MIL-PRF-38535.)

TABLE I. Electrical performance characteristics.

Test	Symbol	Conditions 1/ -55°C ≤ T_C ≤ +125°C unless other wise specified	Device type	Limits		Units
				Min	Max	
High-level output voltage	V_{OH}	V_{CC} = 4.5 V, I_{OH} = -2 mA, V_{IL} = 0.8 V, V_{IH} = 2.0 V	02, 04, 05, 08, 09, 10	2.4		V
Low-level output voltage 2/	V_{OL}	V_{CC} = 4.5 V, I_{OL} = 12 mA, V_{IL} = 0.8 V, V_{IH} = 2.0 V	01, 02, 08, 10		0.5	V
		V_{CC} = 4.5 V, I_{OL} = 8 mA	03, 04, 05, 06, 09		0.5	
Input clamp voltage	V_{IC}	V_{CC} = 4.5 V, I_{IN}= -10 mA, T_C = +25ºC	All		-1.5	V
Maximum collector cut-off current	I_{CEX}	V_{CC} = 5.5 V, V_O = 5.2 V	01, 03, 06		100	µA
High impedance (off-state) output high current	I_{OHZ}	V_{CC} = 5.5 V, V_O = 5.2 V	02, 04, 05, 08, 09, 10		100	µA
High impedance (off-state) output low current	I_{OLZ}	V_{CC} = 5.5 V, V_O = 0.5 V	02, 04, 05, 08, 09, 10		-100	µA
High level input current	I_{IH1}	V_{CC} = 5.5 V, V_{IN} = 5.5 V	All		50	µA
	I_{IH2}	V_{CC} = 5.5 V, V_{IN} = 4.5 V , special programming pin	03, 04, 06, 09		100	
Low level input current	I_{IL}	V_{CC} = 5.5 V, V_{IN} = 0.5 V	All	-1.0	-250	µA
Short circuit output current	I_{OS}	V_{CC} = 5.5 V, V_O = 0.0 V, 3/ V_{IH} = 2.0 V, V_{IL} = 0.8 V	02, 04, 05, 08, 09, 10	-15	-100	mA
Supply current	I_{CC}	V_{CC} = 5.5 V, V_{IN} = 0 V, outputs = open	01, 02		170	mA
			03, 04, 05, 06, 08, 09, 10		185	
Propagation delay time, high to low level logic, address to output	t_{PHL1}	V_{CC} = 4.5 V and 5.5 V, C_L = 30 pF, see figure 6	08		90	ns
			01, 02		125	
			03, 04, 05, 06		90	
			09, 10		55	

See footnotes at end of table.

TABLE I. Electrical performance characteristics – Continued.

Test	Symbol	Conditions 1/ $-55°C \leq T_C \leq +125°C$ unless other wise specified	Device type	Limits		Units
				Min	Max	
Propagation delay time, low to high level logic, address to output	t_{PLH1}	V_{CC} = 4.5 V and 5.5 V, C_L = 30 pF, see figure 6	08		90	ns
			01, 02		125	
			03, 04, 05, 06		90	
			09, 10		55	
Propagation delay time, high to low level logic, enable to output	t_{PHL2}	V_{CC} = 4.5 V and 5.5 V, C_L = 30 pF, see figure 6	08		50	ns
			01, 02		60	
			03, 04, 05, 06		50	
			09, 10		30	
Propagation delay time, low to high level logic, enable to output	t_{PLH2}	V_{CC} = 4.5 V and 5.5 V, C_L = 30 pF, see figure 6	08		50	ns
			01, 02		60	
			03, 04, 05, 06		50	
			09, 10		30	

1/ Complete terminal conditions shall be specified In table III.
2/ I_{OL} = 16 mA for circuits B, D, and F devices.
3/ Not more than one output shall be grounded at one time. Output shall be at high logic level prior to test.

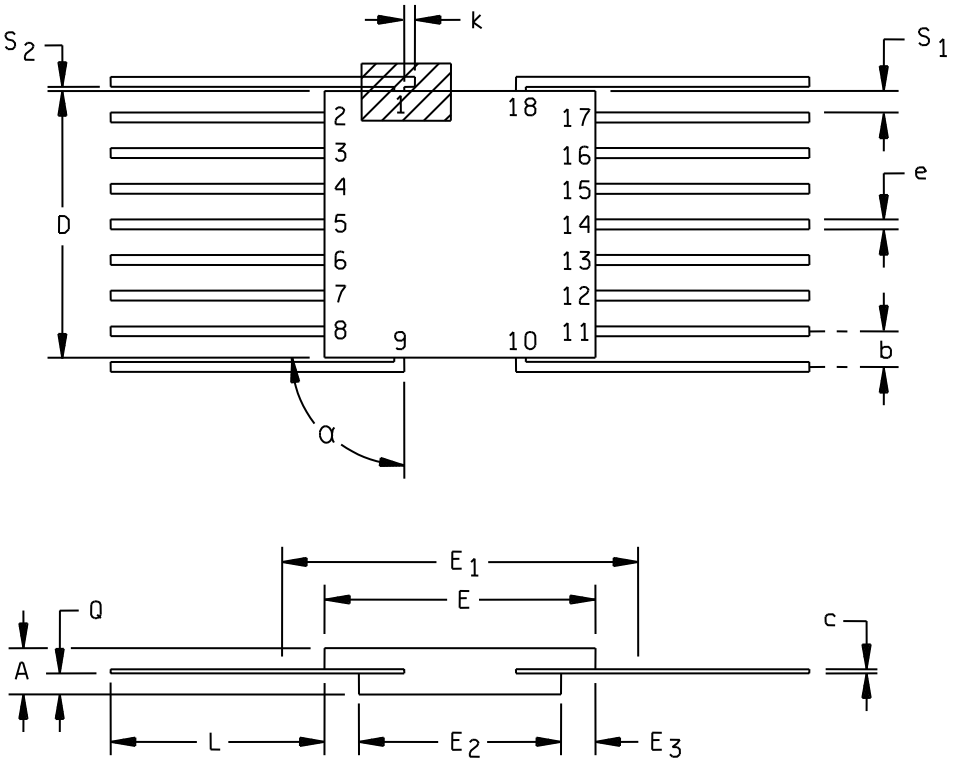

FIGURE 1. Case outline X.

Symbol	Inches		Millimeters		Notes
	Min	Max	Min	Max	
A	.045	.085	1.14	2.16	
b	.015	.020	.38	.51	5
C	.003	.006	.08	.15	5
D	.340	.380	8.64	9.65	
E	.340	.380	8.64	9.65	
E_1		.400		10.16	3
E_2	.260	.290	6.60	7.37	
E_3	.025		.63		
e	.050	BSC	1.27	BSC	4, 6
K	.008	.015	.20	.38	9
L	.250	.330	6.35	8.38	
Q	.010	.040	.25	1.02	2
S_1	.005		.13		7, 8
S_2	.004		.10		10
α	30°	90°	30°	90°	

NOTES:
1. Index area; a tab (dim K) may be used to identify pin one. This tab may be located on either side as shown.
2. Dimension Q shall be measured at the point of exit of the lead from the body.
3. This dimension allows for off-center lid, meniscus and glass overrun.
4. The basic pin spacing is .050 (1.27 mm) between centerlines. Each pin centerline shall be located within ±.005 (0.13 mm) of its exact longitudinal position relative to pins relative to pins 1 and 18.
5. All leads – increase limit by .003 (0.08 mm) measured at the center of the flat, when lead finish A is applied.
6. Sixteen spaces.
7. Applies to all four corners (leads number 2, 8, 11, and 17).
8. Dimension S_1 may be .000 (0.00 mm) if leads are brazed to the metallized ceramic body (see MIL-STD-1835).
9. Optional, see note 1. If a pin one identification mark is used in addition to this tab, the minimum limit of dimension K does not apply.
10. Applies to leads number 1, 9, 10, and 18.

FIGURE 1. Case outline X – Continued.

Device types	01, 02, 08, and 10	03, 04, and 09
Case outlines	V	J and K
Terminal number	Terminal symbol	
1	A_6	A_7
2	A_5	A_6
3	A_4	A_5
4	A_3	A_4
5	A_0	A_3
6	A_1	A_2
7	A_2	A_1
8	A_{10}	A_0
9	GND	O_1
10	$\overline{CE}_1$	O_2
11	O_4	O_3
12	O_3	GND
13	O_2	O_4
14	O_1	O_5
15	A_9	O_6
16	A_8	O_7
17	A_7	O_8
18	V_{CC}	CE_4
19	---	CE_3
20	---	$\overline{CE}_2$
21	---	$\overline{CE}_1$
22	---	A_9
23	---	A_8
24	---	V_{CC}

FIGURE 2. Terminal connections.

Device types	05 and 06	01, 02, and 08	02 and 10
Case outlines	J and K	X	Y
Terminal number	Terminal symbol		
1	A_7	A_6	A_6
2	A_6	A_5	A_5
3	A_5	A_4	A_4
4	A_4	A_3	A_3
5	A_3	A_0	A_0
6	A_2	A_1	A_1
7	A_1	A_2	A_2
8	A_0	A_{10}	A_{10}
9	O_1	GND	GND
10	O_2	$\overline{CE}_1$	$\overline{CE}_1$
11	O_3	O_4	O_4
12	GND	O_3	O_3
13	O_4	O_2	O_2
14	O_5	O_1	O_1
15	O_6	A_9	A_9
16	O_7	A_8	A_8
17	O_8	A_7	A_7
18	NC	V_{CC}	V_{CC}
19	NC	---	---
20	$\overline{CE}$	---	---
21	NC	---	---
22	A_9	---	---
23	A_8	---	---
24	V_{CC}	---	---

FIGURE 2. Terminal connections – Continued.

Device types 01, 02, 08, and 10 (see notes 1, 2, and 3)

Word number	Enable	Address										
	$\overline{CE}_1$	A_{10}	A_9	A_8	A_7	A_6	A_5	A_4	A_3	A_2	A_1	A_0
NA	L	X	X	X	X	X	X	X	X	X	X	X
NA	H	X	X	X	X	X	X	X	X	X	X	X

Word number	Data			
	O_1	O_2	O_3	O_4
NA	See note 5			
NA	OC	OC	OC	OC

Device types 05 and 06 (see notes 1, 2, and 3)

Word number	Enable	Address									
	$\overline{CE}_1$	A_9	A_8	A_7	A_6	A_5	A_4	A_3	A_2	A_1	A_0
NA	L	X	X	X	X	X	X	X	X	X	X
NA	H	X	X	X	X	X	X	X	X	X	X

Word number	Data							
	O_1	O_2	O_3	O_4	O_5	O_6	O_7	O_8
NA	See note 5							
NA	OC	OC	OC	OC	OC	OC	OC	OC

FIGURE 3. Truth tables (unprogrammed).

Device types 03, 04, and 09 (see notes 1, 2, 3, and 4)

Word number	Enable				Address									
	$\overline{CE}_1$	$\overline{CE}_2$	CE_3	CE_4	A_9	A_8	A_7	A_6	A_5	A_4	A_3	A_2	A_1	A_0
NA	L	L	H	H	X	X	X	X	X	X	X	X	X	X
NA	L	H	H	H	X	X	X	X	X	X	X	X	X	X
NA	H	L	H	H	X	X	X	X	X	X	X	X	X	X
NA	H	H	L	H	X	X	X	X	X	X	X	X	X	X
NA	H	H	L	L	X	X	X	X	X	X	X	X	X	X

Word number	Data							
	O_1	O_2	O_3	O_4	O_5	O_6	O_7	O_8
NA	See note 5							
NA	OC	OC	OC	OC	OC	OC	OC	OC
NA	OC	OC	OC	OC	OC	OC	OC	OC
NA	OC	OC	OC	OC	OC	OC	OC	OC
NA	OC	OC	OC	OC	OC	OC	OC	OC

NOTES:

1. NA = Not applicable.
2. X = Input may be high level, low level or open circuit.
3. OC = Open circuit (high resistance output).
4. Program readout can only be accomplished with both enable inputs at low level.
5. The outputs for an unprogrammed device shall be high for circuits A, B (device types 03 and 04), and F; and shall be low for circuits B (device types 01, 02, and 08), C, D, E, G and H.

FIGURE 3. Truth tables (unprogrammed) – Continued.

Device types 01, 02, and 08 (Circuit B)
Device types 01 and 02 (Circuit A)
Device type 02 (Circuit F)
Device types 03 and 04 (Circuit E)

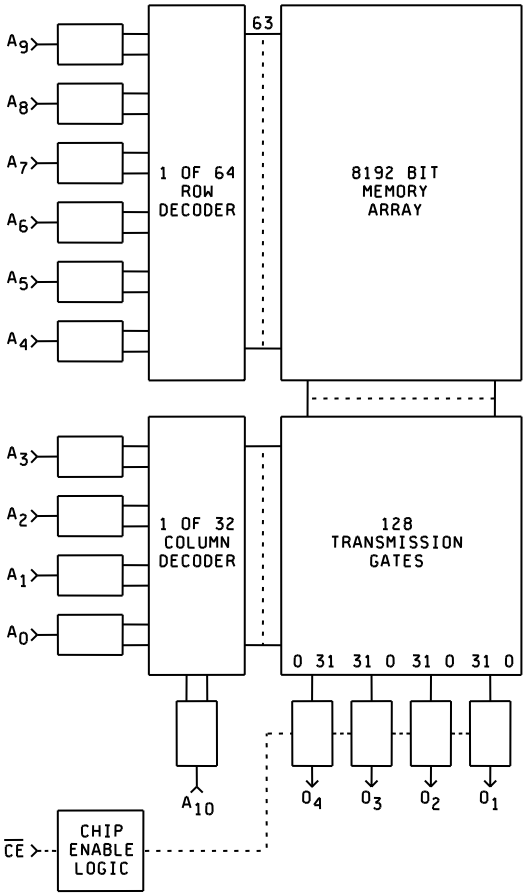

FIGURE 4. Functional block diagrams.

Device types 01, 02, and 10
Circuit C

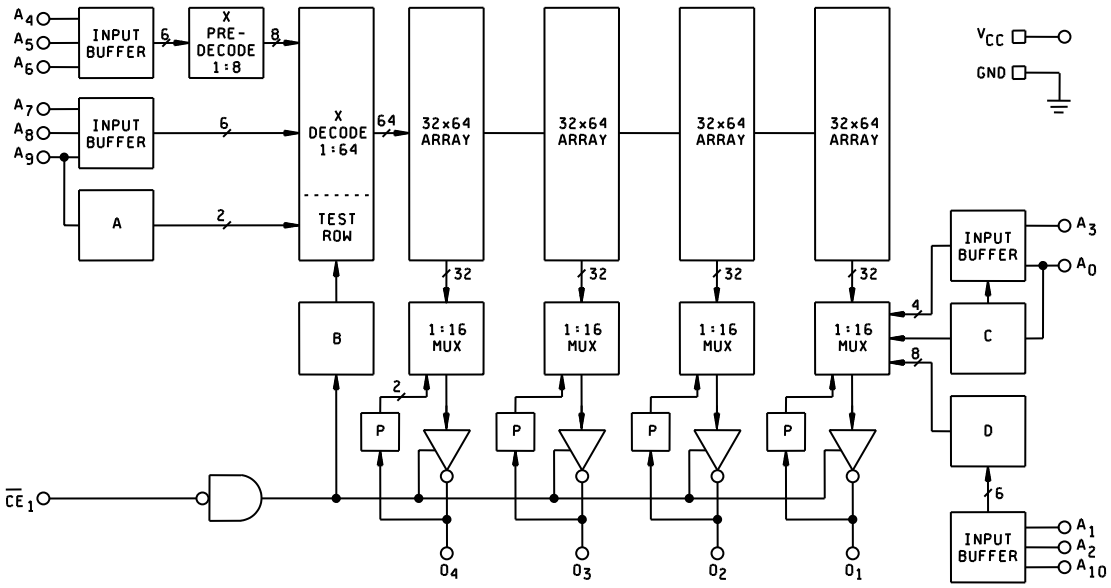

FIGURE 4. Functional block diagrams – Continued.

Device type 02
Circuit H

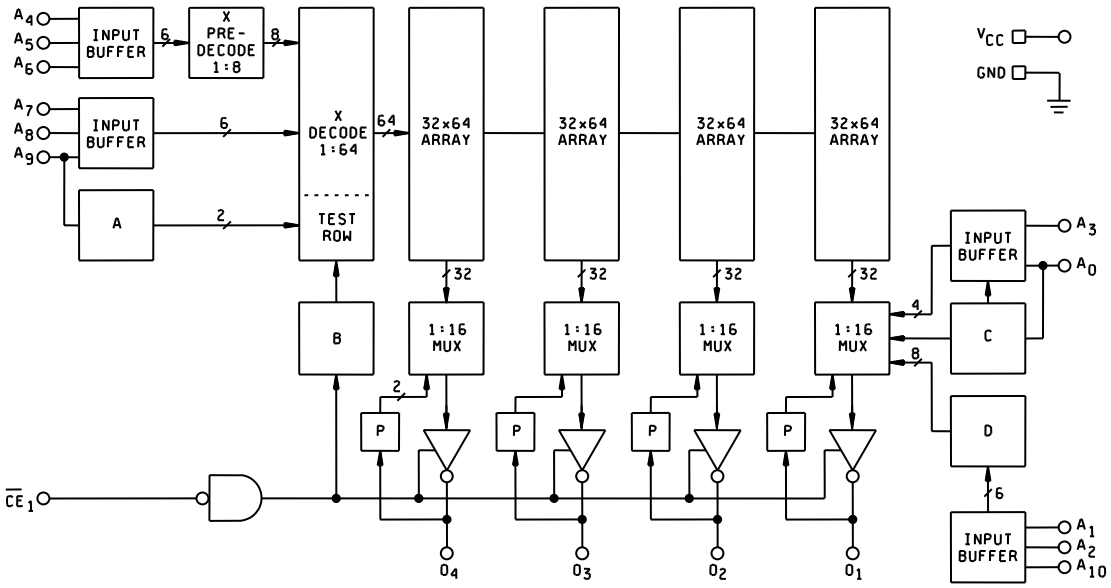

FIGURE 4. Functional block diagrams – Continued.

Device types 03 and 04
Circuit A

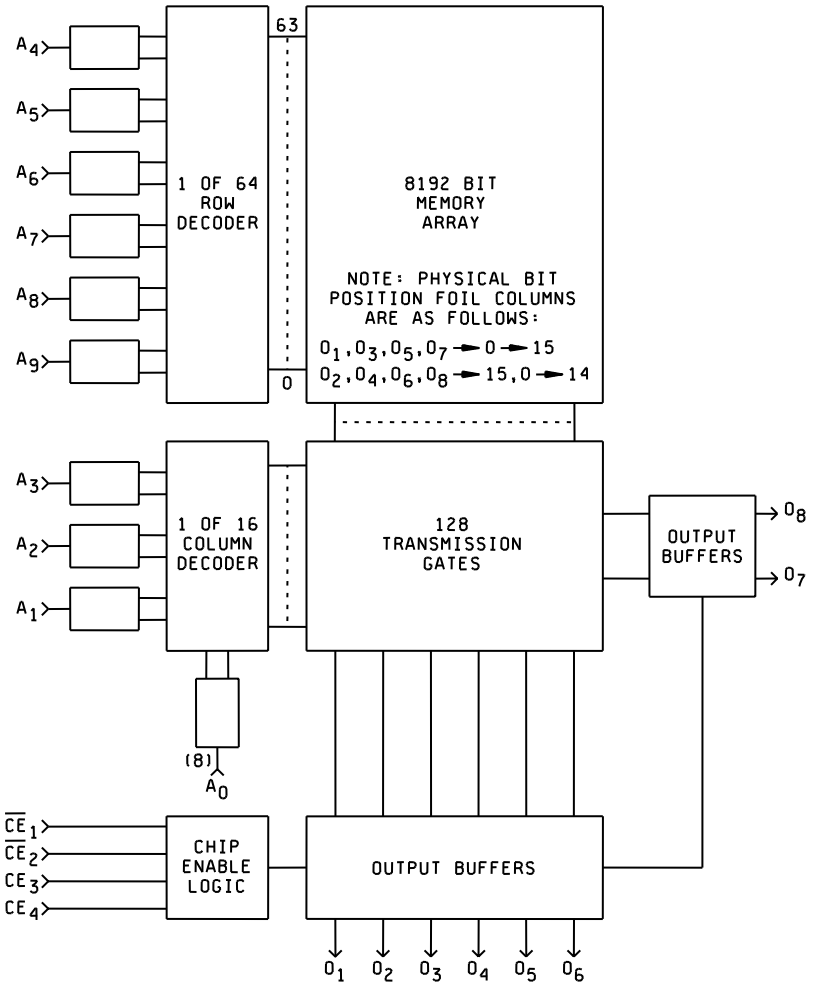

FIGURE 4. Functional block diagrams – Continued.

DEVICE TYPES 01 AND 02
CIRCUIT G

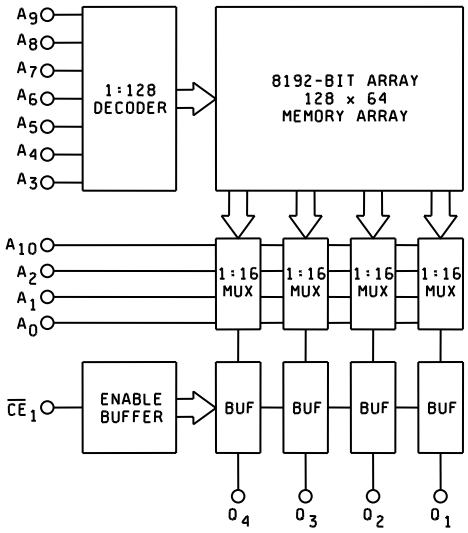

DEVICE TYPES 03 AND 04
CIRCUIT G

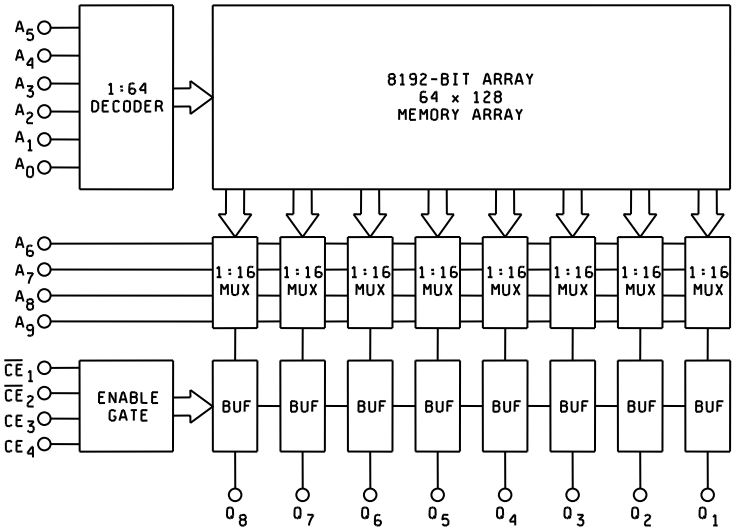

FIGURE 4. Functional block diagrams – Continued.

Device type 04
Circuit F

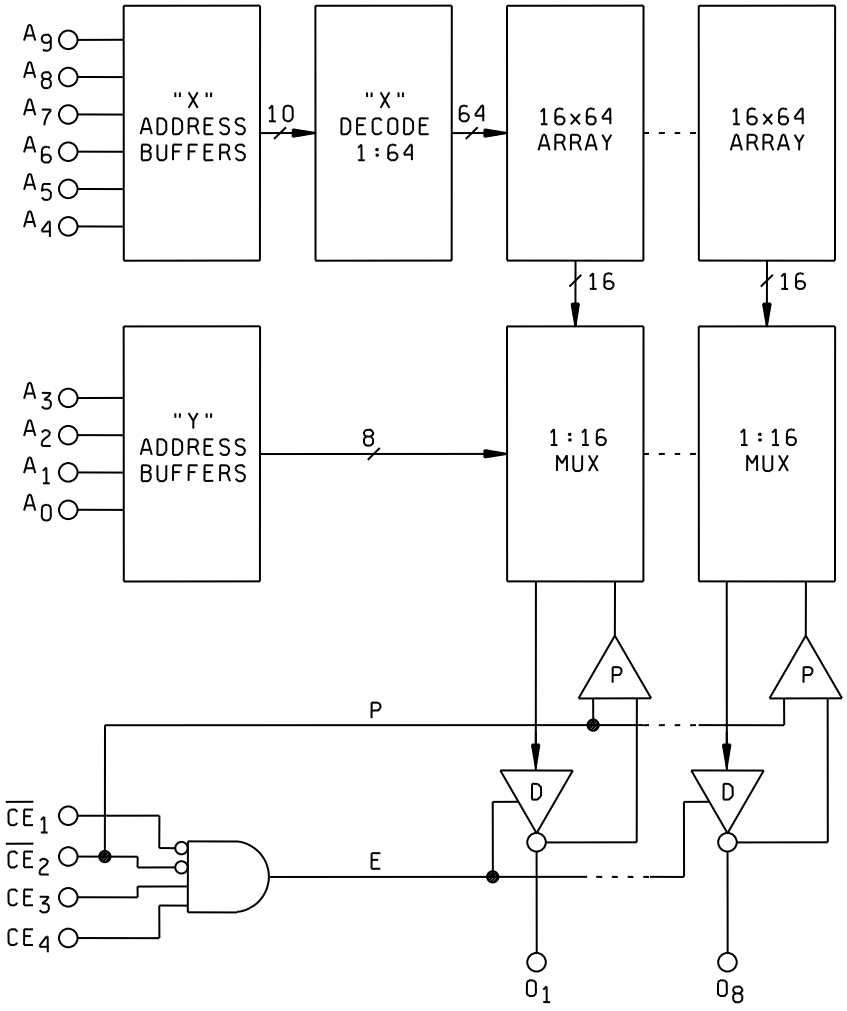

FIGURE 4. Functional block diagrams – Continued.

Device types 03, 04, 05, and 09
Circuit C

Device types 04
Circuit H

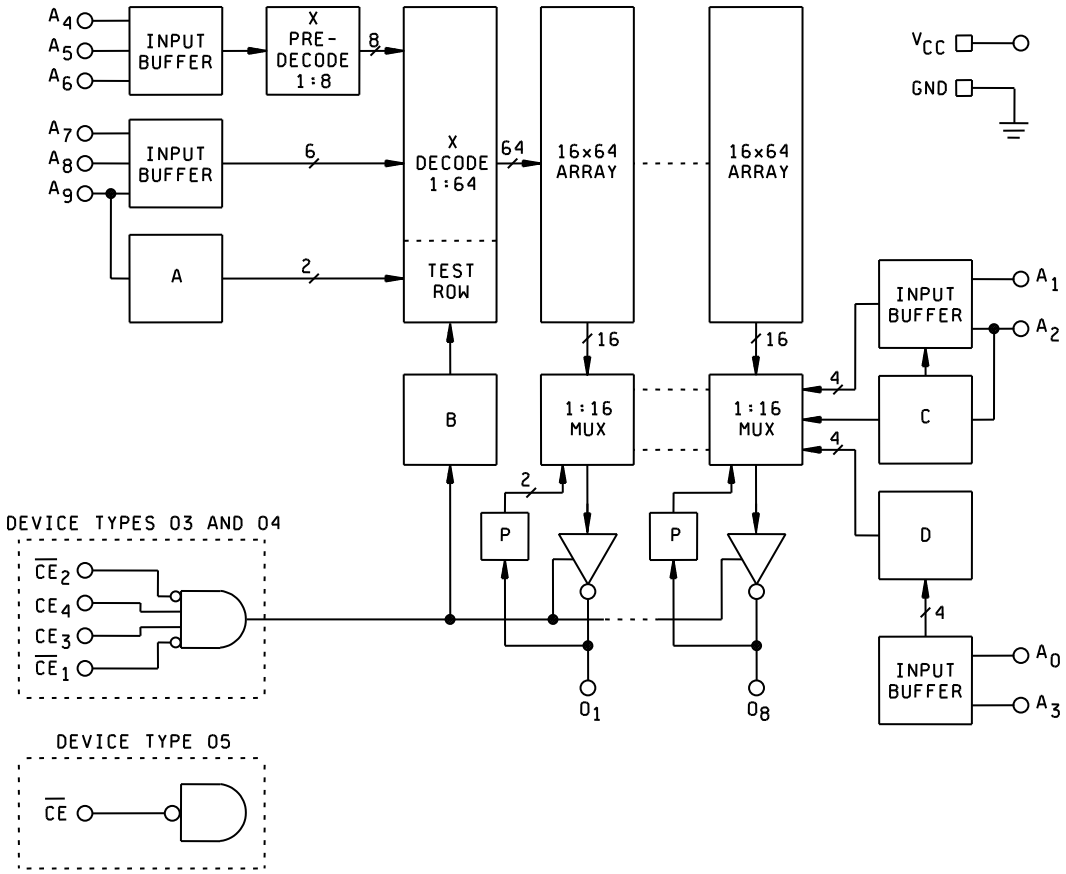

FIGURE 4. Functional block diagrams – Continued.

Device types 03, 04, 05, 06, and 09
Circuits B and D

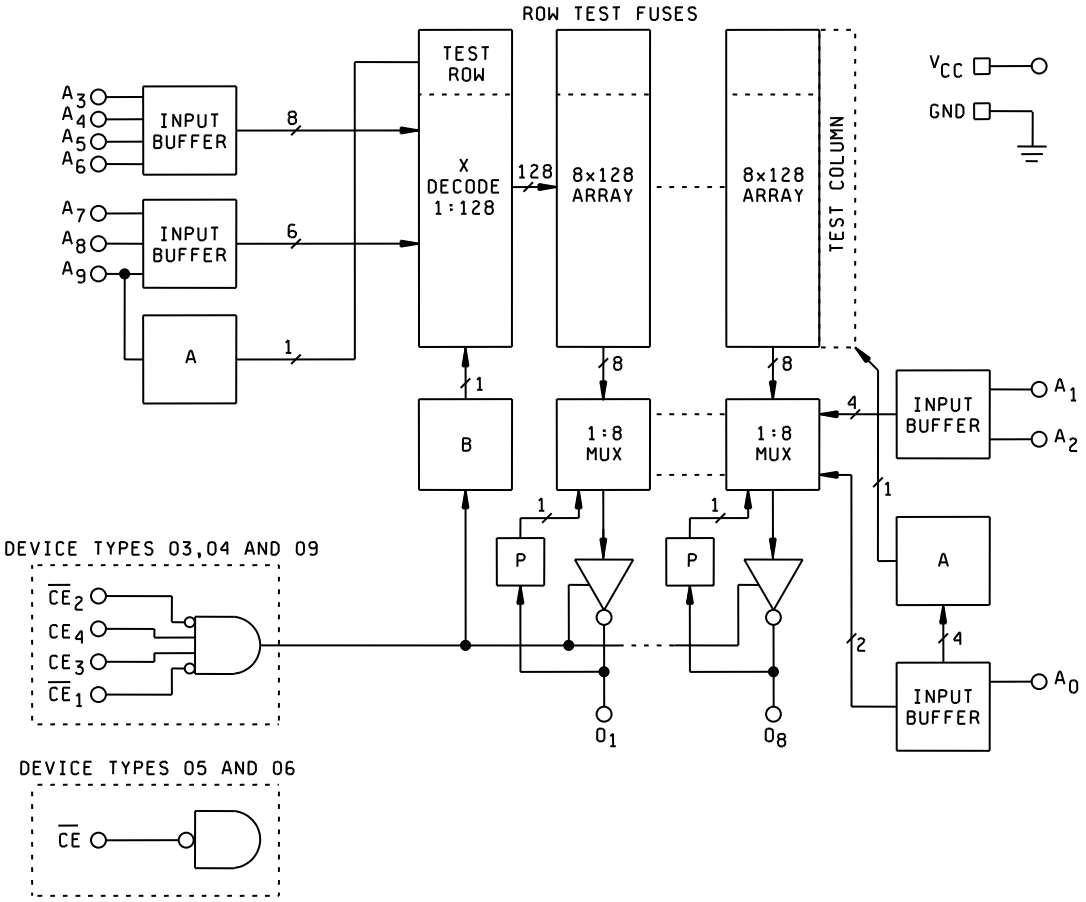

FIGURE 4. Functional block diagrams – Continued.

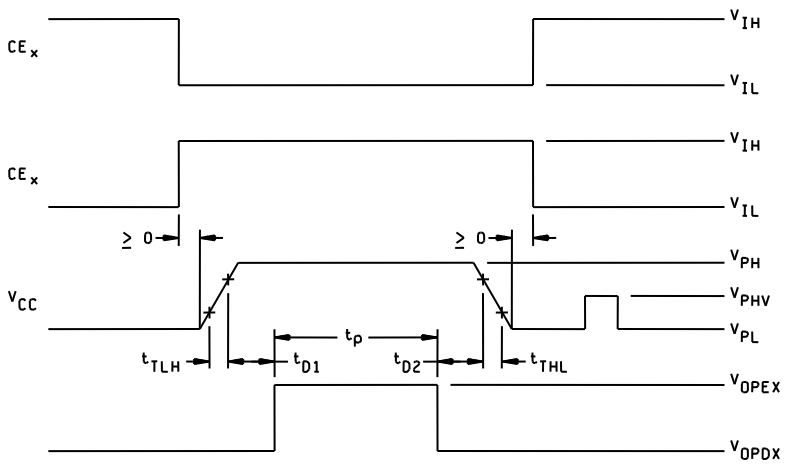

NOTE: All other waveform characteristics shall be as specified in table IVA.

FIGURE 5A. Programming voltage waveforms during programming for circuit A.

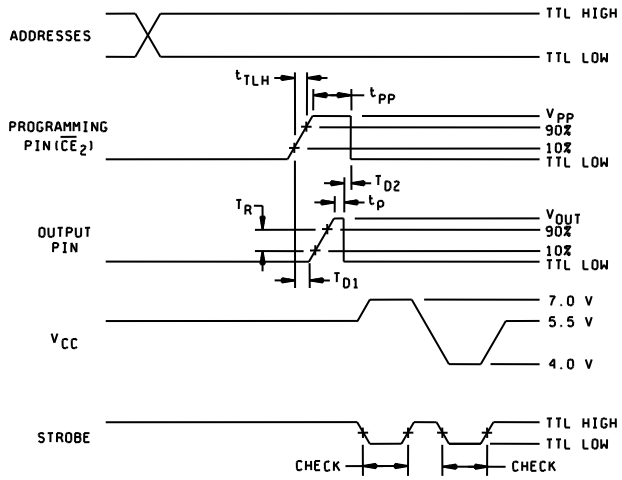

NOTES:
1. Output load is 0.2 mA and 12 mA during 7.0 V and 4.0 V check, respectively.
2. All other waveform characteristics shall be as specified in table IVB.

(Device types 03 and 04)

FIGURE 5B. Programming voltage waveforms during programming for circuit B.

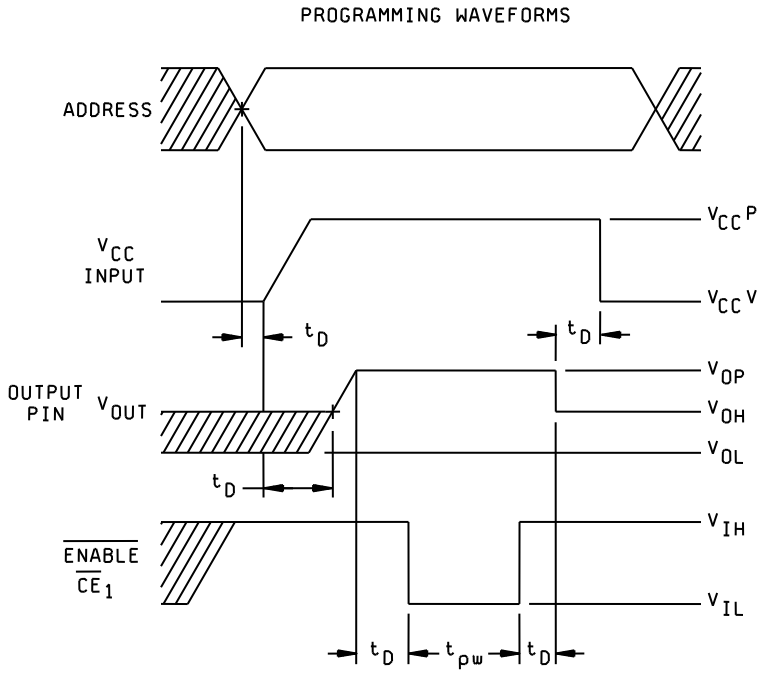

(Device types 01, 02, and 08)

FIGURE 5B. Programming voltage waveforms during programming for circuit B – Continued.

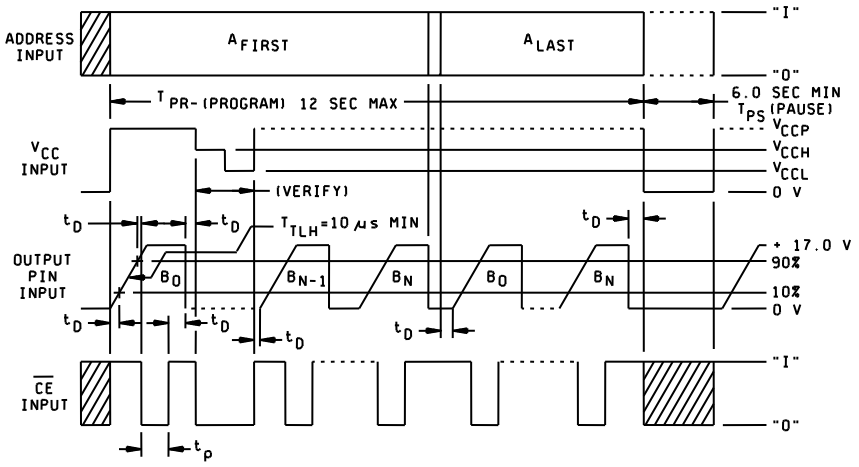

NOTE: All other waveform characteristics shall be as specified in table IVC.

FIGURE 5C. Programming voltage waveforms during programming for circuit C and H.

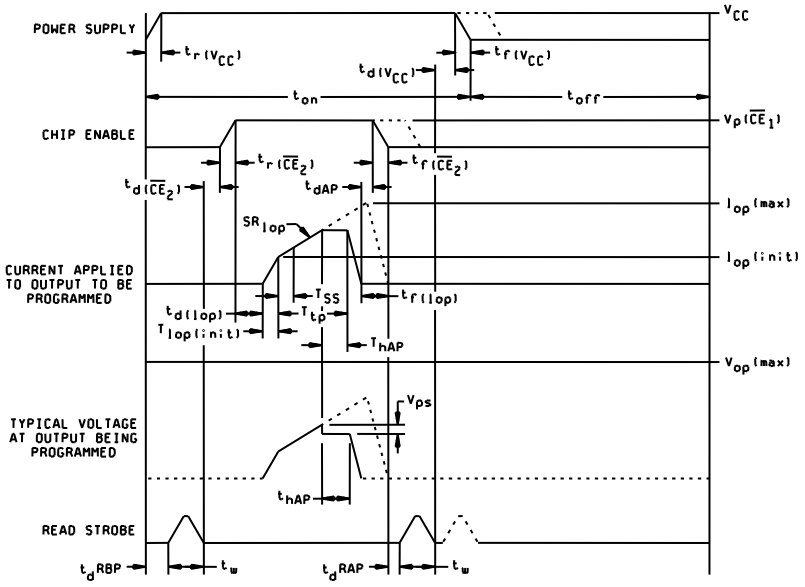

NOTE: All other waveform characteristics shall be as specified in table IVD.

FIGURE 5D. Programming voltage waveforms during programming for circuit D.

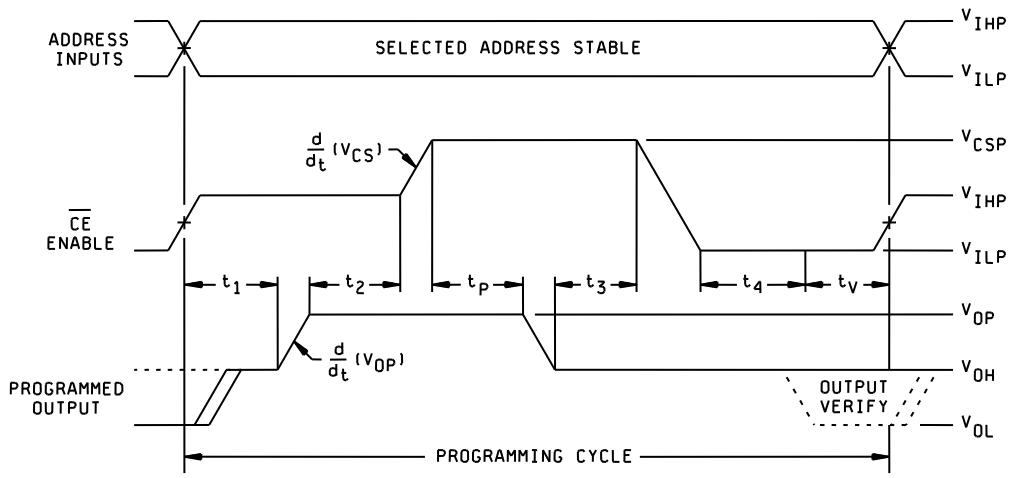

NOTES:

1. All delays between edges are specified from completion of the first edge, not midpoints.
2. Delays t_1, t_2, t_3, and t_4 must be greater than 100 ns; maximum delays of 1 μs are recommended to minimize heating during programming.
3. During t_V the output being programmed is switched to the load R and verified.
4. Outputs not being programmed are connected to V_{ONP} through a resistor which provides output current limiting.
5. All other waveform characteristics shall be as specified in table IVE.

FIGURE 5E. Programming voltage waveforms during programming for circuit E.

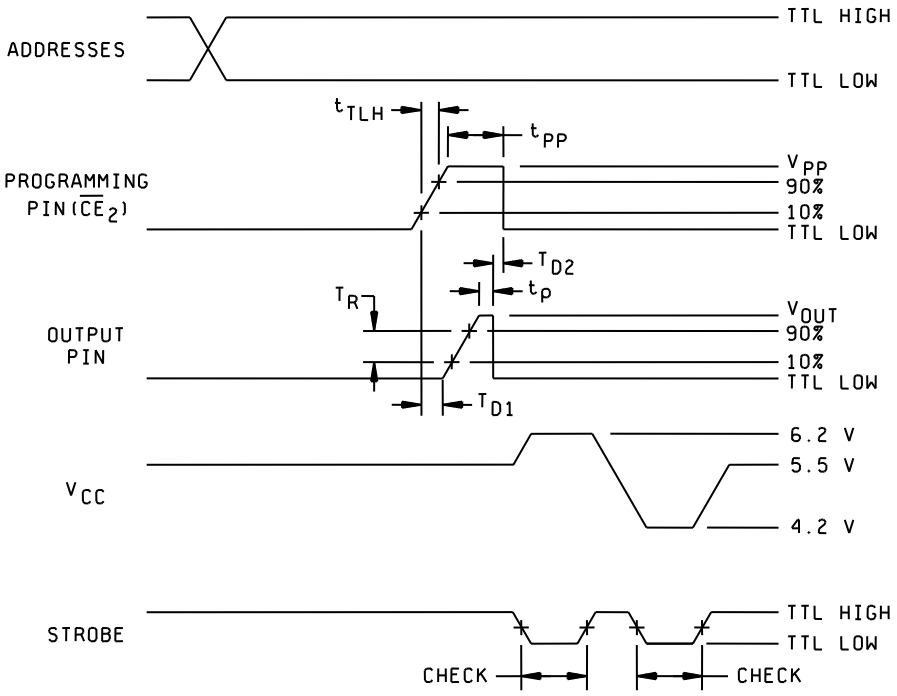

NOTES:
1. Output load is 0.2 mA and 12 mA during 6.2 V and 4.2 V check, respectively.
2. All other waveform characteristics shall be as specified in table IVF.

FIGURE 5F. Programming voltage waveforms during programming for circuit F.

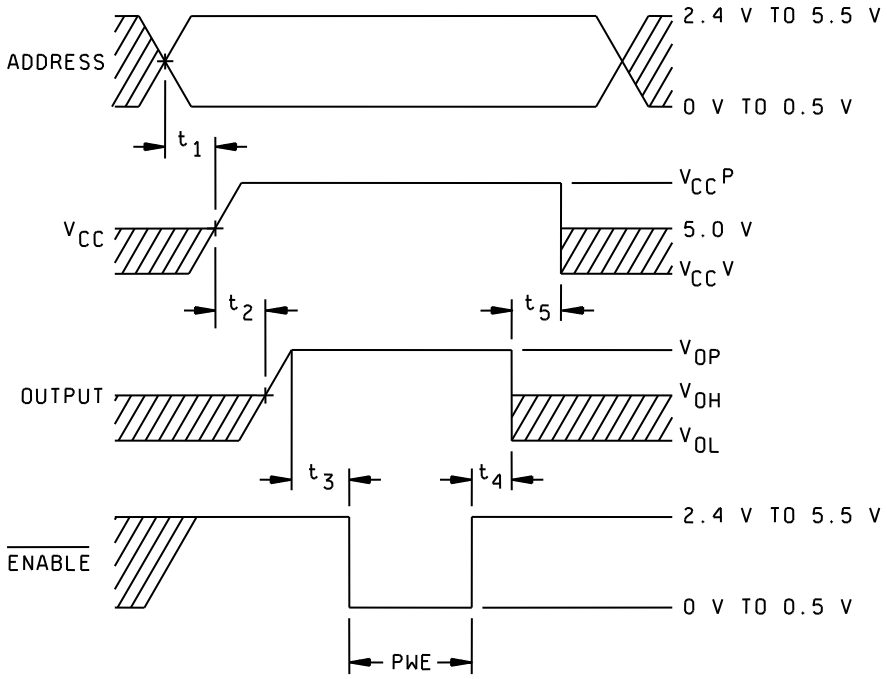

FIGURE 5G. Programming voltage waveforms during programming for circuit G.

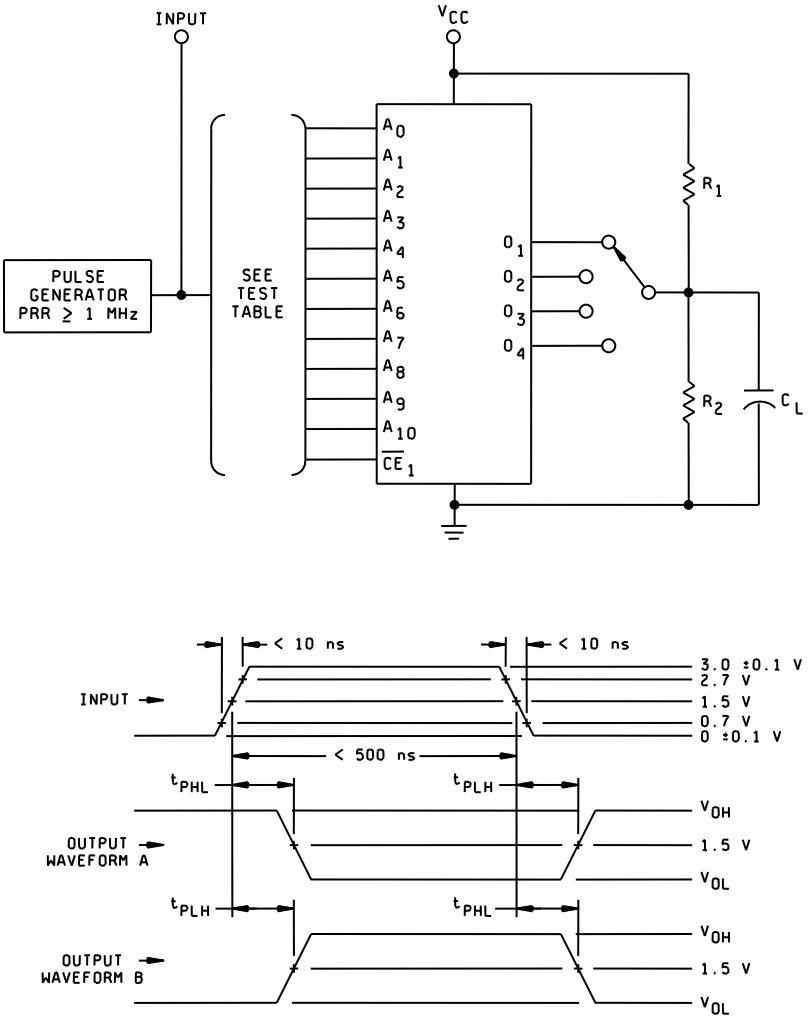

NOTES:

1. Test table for devices programmed in accordance with an altered item drawing may be replaced by the equivalent tests which apply to the specific program configuration for the resulting read-only memory.
2. C_L = 30 pF minimum, including jig and probe capacitance; R_1 = 330 Ω ±25% and R_2 = 680 Ω ±20 %.
3. Outputs may be under load simultaneously.

FIGURE 6. Switching time test circuit.

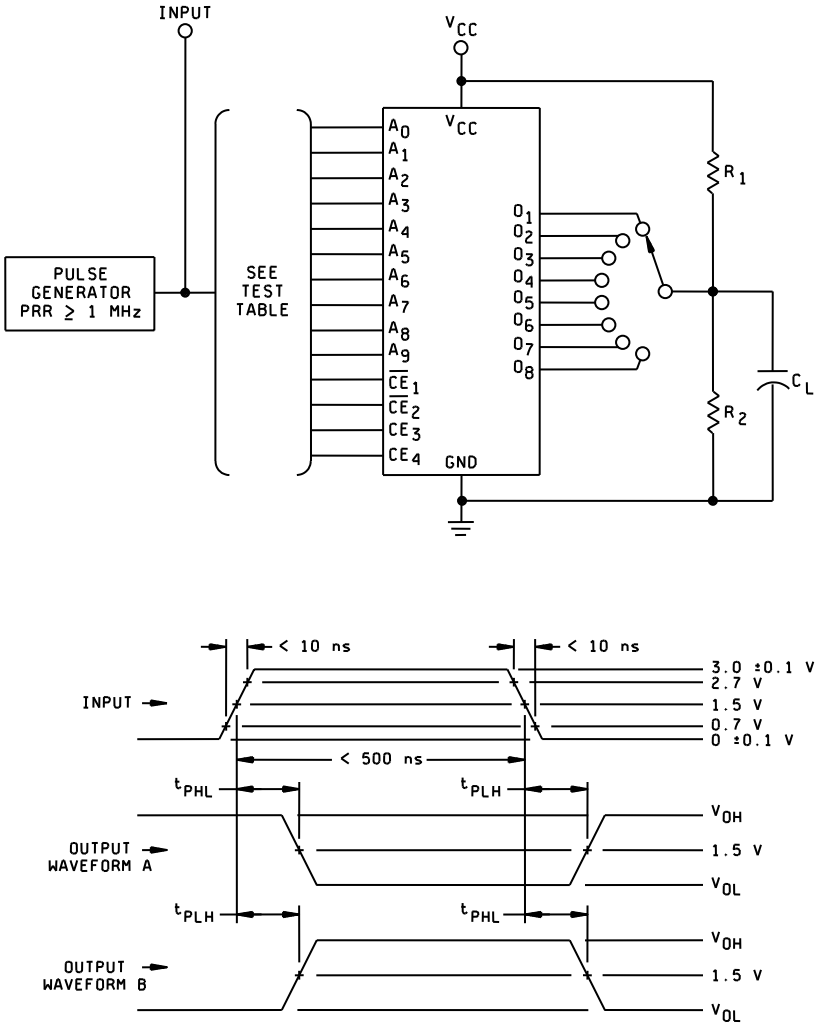

NOTES:

1. Test table for devices programmed in accordance with an altered item drawing may be replaced by the equivalent tests which apply to the specific program configuration for the resulting read-only memory.
2. C_L = 30 pF minimum, including jig and probe capacitance; R_1 = 330 Ω ±25% and R_2 = 680 Ω ±20 %.
3. Outputs may be under load simultaneously.

FIGURE 6. Switching time test circuit – Continued.

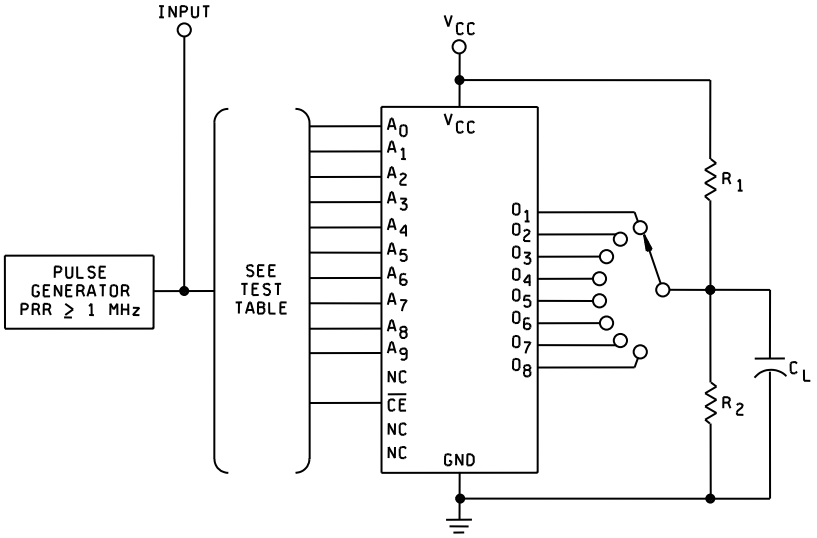

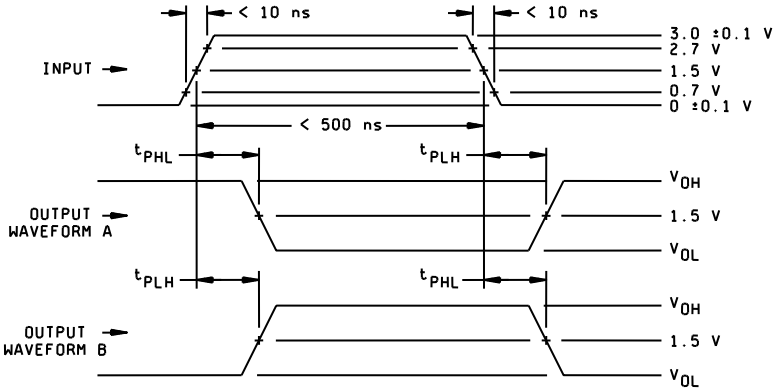

NOTES:

1. Test table for devices programmed in accordance with an altered item drawing may be replaced by the equivalent tests which apply to the specific program configuration for the resulting read-only memory.
2. C_L = 30 pF minimum, including jig and probe capacitance; R_1 = 330 Ω ±25% and R_2 = 680 Ω ±20 %.
3. Outputs may be under load simultaneously.

FIGURE 6. Switching time test circuit – Continued.

4. VERIFICATION

4.1 Sampling and inspection. Sampling and inspection procedures shall be in accordance with MIL-PRF-38535 or as modified in the device manufacturer's Quality Management (QM) plan. The modification in the QM plan shall not effect the form, fit, or function as described herein.

4.2 Screening. Screening shall be in accordance with MIL-PRF-38535 and shall be conducted on all devices prior to qualification and quality conformance inspection. The following additional criteria shall apply:

a. The burn-in test duration, test condition, and test temperature, or approved alternatives shall be as specified in the device manufacturer's QM plan in accordance with MIL-PRF-38535. The burn-in test circuit shall be maintained under document control by the device manufacturer's Technology Review Board (TRB) in accordance with MIL-PRF-38535 and shall be made available to the acquiring or preparing activity upon request. The test circuit shall specify the inputs, outputs, biases, and power dissipation, as applicable, in accordance with the intent specified in test method 1015 of MIL-STD-883.

b. Interim and final electrical test parameters shall be as specified in table II, except interim electrical parameters test prior to burn-in is optional at the discretion of the manufacturer.

c. Additional screening for space level product shall be as specified in MIL-PRF-38535, appendix B.

d. Class B devices processed to an altered item drawing may be programmed either before or after burn-in at the manufacturer’s discretion. The required electrical testing shall include, as a minimum, the final electrical tests for programmed devices as specified in table II herein. Class S devices processed by the manufacturer to an altered item drawing shall be programmed prior to burn-in.

4.3 Qualification inspection. Qualification inspection shall be in accordance with MIL-PRF-38535. Qualification data for subgroups 7 through 11 shall be by attributes only.

4.3.1 Qualification extension. When authorized by the qualifying activity, for qualification inspection, if a manufacturer qualifies faster device type which is manufactured identically (for example, same die, process, and package) to other device types on this specification, then the other device types may be qualified by conducting only group A electrical tests and any electrical specified as additional group C subgroups and submitting data in accordance with MIL-PRF-38535 (for example, groups B, C, and D tests are not required).

4.4 Technology Conformance inspection (TCI). Technology conformance inspection shall be in accordance with MIL-PRF-38535 and as specified herein for groups A, B, C, and D inspections (see 4.4.1 through 4.4.4).

4.4.1 Group A inspection. Group A inspection shall be in accordance with table III of MIL-PRF-38535 and as follows:

a. Electrical test requirements shall be as specified in table II herein.

b. Subgroups 4, 5, and 6 shall be omitted.

c. For unprogrammed devices, a sample shall be selected to satisfy programmability requirements prior to performing subgroups 9, 10, and 11. Twelve devices shall be submitted to programming (see 3.3.2.1). If more than 2 devices fail to program, the lot shall be rejected, At the manufacturer’s option, the sample may be increased to 24 total devices with no more than 4 total device failures allowed.

d. For unprogrammed devices, 10 devices from the programmability sample shall be subjected to the requirements of group A, subgroups 9, 10, and 11. If more than two total devices fail in all three subgroups, the lot shall be rejected. At the manufacturer’s option, the sample may be increased to 20 total devices with no more that 4 total device failures allowable.

TABLE II. Electrical test requirements.

MIL-PRF-38535 test requirements	Subgroups (see table III) 1/, 2/, 3/	
	Class S devices	Class B devices
Interim electrical parameters	1	1
Final electrical test parameters for unprogrammed devices	1*, 2, 3, 7*, 8	1*, 2, 3, 7*, 8
Final electrical test parameters for programmed devices	1*, 2, 3, 7* 8, 9, 10, 11	1*, 2, 3, 7*, 8, 9,
Group A test requirements	1, 2, 3, 7, 8, 9, 10, 11	1, 2, 3, 7, 8, 9, 10, 11
Group B end-point electrical parameters subgroup 5 when using the method 5005 QCI option	1, 2, 3, 7, 8, 9, 10, 11	N/A
Group C end-point electrical parameters	1, 2, 3, 7, 8, 9, 10, 11	1, 2, 3, 7, 8
Group D test requirements	1, 2, 3, 7, 8	1, 2, 3, 7, 8

1/ * indicates PDA applies to subgroups 1 and 7.
2/ Any or all subgroups may be combined when using high-speed testers.
3/ Subgroups 7 and 8 shall consist of verifying the pattern specified.

4.4.2 Group B inspection. Group B inspection shall be in accordance with table II MIL-PRF-38535.

4.4.3 Group C inspection. Group C inspection shall be in accordance with table IV of MIL-PRF-38535 and as follows:

a. End-point electrical parameters shall be as specified in table II herein.

b. The steady-state life test duration, test condition, and test temperature, or approved alternatives shall be as specified in the device manufacturer's QM plan in accordance with MIL-PRF-38535. The burn-in test circuit shall be maintained under document control by the device manufacturer's Technology Review Board (TRB) in accordance with MIL-PRF-38535 and shall be made available to the acquiring or preparing activity upon request. The test circuit shall specify the inputs, outputs, biases, and power dissipation, as applicable, in accordance with the intent specified in test method 1005 of MIL-STD-883.

c. For qualification inspection, at least 50 percent of the sample selected for testing in subgroup 1 shall be programmed (see 3.3.2). For quality conformance inspection, the programmability sample (see 4.4.1c) shall be included in the life tests.

4.4.4 Group D inspection. Group D inspection shall be in accordance with table V of MIL-PRF-38535. End-point electrical parameters shall be as specified in table II herein.

4.5 Methods of inspection. Methods of inspection shall be specified and as follows:

4.5.1 Voltage and current. All voltages given are referenced to the microcircuit ground terminal. Currents given are conventional and positive when flowing into the referenced terminal.

TABLE III. Group A inspection for device type 01.

Terminal conditions (outputs not designated are open or resistive coupled to GND or voltage; inputs not designated are high ≥ 2.0 V, low ≤ 0.8 V, or open).

Subgroup	Symbol	MIL-STD-883 method	Cases V,X	1	2	3	4	5	6	7	8	9	10	11	12	13	14	15	16	17	18	Meas. terminal	Test limits		Unit
			Test no.	A_6	A_5	A_4	A_3	A_0	A_1	A_2	A_{10}	GND	$\overline{CE}_1$	O_4	O_3	O_2	O_1	A_9	A_8	A_7	V_{CC}		Min	Max	
1 T_C = +25°C	V_{IC}		1 2 3 4 5 6 7 8 9 10 11 12	-10mA	-10mA	-10mA	-10mA	-10mA	-10mA	-10mA	-10mA	GND “ “ “ “ “ “ “ “ “ “ “	-10mA					-10mA	-10mA	-10mA	4.5V “ “ “ “ “ “ “ “ “ “ “	A_6 A_5 A_4 A_3 A_0 A_1 A_2 A_{10} $\overline{CE}_1$ A_9 A_8 A_7		-1.5 “ “ “ “ “ “ “ “ “ “ “	V “ “ “ “ “ “ “ “ “ “ “
	V_{OL}	3007	13 14 15 16	1/ 2/ “ “ “	1/ “ “ “	1/ “ “ “	1/ “ “ “	1/ “ “ “	1/ “ “ “	1/ “ “ “	1/ “ “ “	“ “ “ “	0.5V “ “ “	3/	3/	3/	3/	1/ “ “ “	1/ “ “ “	1/ “ “ “	“ “ “ “	O_4 O_3 O_2 O_1		0.5 “ “ “	V “ “ “
	I_{IL}	3009	17 18 19 20 21 22 23 24 25 26 27 28	0.5V	0.5V	0.5V	0.5V	0.5V	0.5V	0.5V	0.5V	“ “ “ “ “ “ “ “ “ “ “ “	0.5V					0.5V	0.5V	0.5V	5.5V “ “ “ “ “ “ “ “ “ “ “	A_6 A_5 A_4 A_3 A_0 A_1 A_2 A_{10} $\overline{CE}_1$ A_9 A_8 A_7	-1.0 “ “ “ “ “ “ “ “ “ “ “	-250 “ “ “ “ “ “ “ “ “ “ “	µA “ “ “ “ “ “ “ “ “ “ “
	I_{IH}	3010	29 30 31 32 33 34 35 36 37 38 39 40	5.5V	5.5V	5.5V	5.5V	5.5V	5.5V	5.5V	5.5V	“ “ “ “ “ “ “ “ “ “ “ “	5.5V					5.5V	5.5V	5.5V	“ “ “ “ “ “ “ “ “ “ “ “	A_6 A_5 A_4 A_3 A_0 A_1 A_2 A_{10} A_9 A_8 A_7 $\overline{CE}_1$		50 “ “ “ “ “ “ “ “ “ “ “	µA “ “ “ “ “ “ “ “ “ “ “
	I_{CEX}		41 42 43 44									“ “ “ “	“ “ “ “	5.2V	5.2V	5.2V	5.2V				“ “ “ “	O_4 O_3 O_2 O_1		100 “ “ “	µA “ “ “
	I_{CC}	3005	45	GND	GND	GND	GND	GND	GND	GND	GND	“	GND					GND	GND	GND	“	V_{CC}		170	mA
2	Same tests, terminal conditions, and limits as for subgroup 1, except T_C = +125°C and V_{IC} tests are omitted.																								
3	Same tests, terminal conditions, and limits as for subgroup 1, except T_C = -55°C and V_{IC} tests are omitted.																								
7 T_C = +25°C	Func-tional tests	4/	46	4/	4/	4/	4/	4/	4/	4/	4/	GND	4/	4/	4/	4/	4/	4/	4/	4/	4/	Outputs		4/	

See footnotes at end of table.

TABLE III. Group A inspection for device type 01 – Continued.

Terminal conditions (outputs not designated are open or resistive coupled to GND or voltage; inputs not designated are high ≥ 2.0 V, low ≤ 0.8 V, or open).

Subgroup	Symbol	MIL-STD-883 method	Cases V,X	1	2	3	4	5	6	7	8	9	10	11	12	13	14	15	16	17	18	Meas. terminal	Test limits		Unit
			Test no.	A_6	A_5	A_4	A_3	A_0	A_1	A_2	A_{10}	GND	$\overline{CE}_1$	O_4	O_3	O_2	O_1	A_9	A_8	A_7	V_{CC}		Min	Max	
8	Same tests, terminal conditions, and limits as for subgroup 7, except T_C = +125°C and -55°C.																								
9 T_C = +25°C	t_{PHL1}	GALPAT Fig. 6	47	5/	5/	5/	5/	5/	5/	5/	5/	GND	GND	6/	6/	6/	6/	5/	5/	5/	5/	Outputs		125	ns
	t_{PLH1}	GALPAT Fig. 6	48	5/	5/	5/	5/	5/	5/	5/	5/	"	GND	"	"	"	"	5/	5/	5/	5/	"		125	"
	t_{PHL2}	Sequen-tial Fig. 6	49	7/	7/	7/	7/	7/	7/	7/	7/	"	7/	"	"	"	"	7/	7/	7/	7/	"		60	"
	t_{PLH2}	Sequen-tial Fig. 6	50	7/	7/	7/	7/	7/	7/	7/	7/	"	7/	"	"	"	"	7/	7/	7/	7/	"		60 8/	"
10	Same tests, terminal conditions, and limits as for subgroup 9, except T_C = +125°C.																								
11	Same tests, terminal conditions, and limits as for subgroup 9, except T_C = -55°C.																								

See footnotes at end of table.

TABLE III. Group A inspection for device types 02, 08, and 10.

Terminal conditions (outputs not designated are open or resistive coupled to GND or voltage; inputs not designated are high ≥ 2.0 V, low ≤ 0.8 V, or open).

Subgroup	Symbol	MIL-STD-883 method	Cases V,X,Y	1	2	3	4	5	6	7	8	9	10	11	12	13	14	15	16	17	18	Meas. terminal	Test limits		Unit
			Test no.	A_6	A_5	A_4	A_3	A_0	A_1	A_2	A_{10}	GND	$\overline{CE}_1$	O_4	O_3	O_2	O_1	A_9	A_8	A_7	V_{CC}		Min	Max	
1 T_C = +25°C	V_{IC}		1 2 3 4 5 6 7 8 9 10 11 12	-10mA	-10mA	-10mA	-10mA	-10mA	-10mA	-10mA	-10mA	GND “ “ “ “ “ “ “ “ “ “ “	-10mA					-10mA	-10mA	-10mA	4.5V “ “ “ “ “ “ “ “ “ “ “	A_6 A_5 A_4 A_3 A_0 A_1 A_2 A_{10} $\overline{CE}_1$ A_9 A_8 A_7		-1.5 “ “ “ “ “ “ “ “ “ “ “	V “ “ “ “ “ “ “ “ “ “ “
	V_{OL}	3007	13 14 15 16	1/ 2/ “ “ “	1/ “ “ “	1/ “ “ “	1/ “ “ “	1/ 9/ “ “ “	1/ “ “ “	1/ “ “ “	1/ “ “ “	“ “ “ “	0.5V “ “ “	3/	3/	3/	3/	1/ “ “ “	1/ “ “ “	1/ “ “ “	“ “ “ “	O_4 O_3 O_2 O_1		0.5 “ “ “	V “ “ “
	V_{OH}	3006	17 18 19 20	1/ 10/ 11/ “ “ 12/	1/ 9/ 10/ “ “ “	1/ 12/ “ “ “	21/ “ “ “	1/ 13/ “ “ “	“ “ “ “	“ “ “ “	1/ 10/ 12/ “ “ “	“ “ “ “	“ “ “ “	-2mA	-2mA	-2mA	-2mA	1/ 9/ “ “ “	1/ 13/ “ “ “	“ “ “ “	“ “ “ “	O_4 O_3 O_2 O_1	2.4 “ “ “		V “ “ “
	I_{IL}	3009	21 22 23 24 25 26 27 28 29 30 31 32	0.5V	0.5V	0.5V	0.5V	0.5V	0.5V	0.5V	0.5V	“ “ “ “ “ “ “ “ “ “ “ “	0.5V					0.5V	0.5V	0.5V	5.5V “ “ “ “ “ “ “ “ “ “ “	A_6 A_5 A_4 A_3 A_0 A_1 A_2 A_{10} $\overline{CE}_1$ A_9 A_8 A_7	-1.0 “ “ “ “ “ “ “ “ “ “ “	-250 “ “ “ “ “ “ “ “ “ “ “	µA “ “ “ “ “ “ “ “ “ “ “
	I_{IH}	3010	33 34 35 36 37 38 39 40 41 42 43 44	5.5V	5.5V	5.5V	5.5V	5.5V	5.5V	5.5V	5.5V	“ “ “ “ “ “ “ “ “ “ “ “	5.5V					5.5V	5.5V	5.5V	5.5V “ “ “ “ “ “ “ “ “ “ “	A_6 A_5 A_4 A_3 A_0 A_1 A_2 A_{10} A_9 A_8 A_7 $\overline{CE}$ 1		50 “ “ “ “ “ “ “ “ “ “ “	µA “ “ “ “ “ “ “ “ “ “ “
	I_{OHZ}		45 46 47 48									“ “ “ “	14/ “ “	5.2V	5.2V	5.2V	5.2V				“ “ “ “	O_4 O_3 O_2 O_1		100 “ “ “	µA “ “ “
	I_{OLZ}		49 50 51 52									“ “ “ “	“ “ “ “	0.5V	0.5V	0.5V	0.5V				“ “ “ “	O_4 O_3 O_2 O_1		-100 “ “ “	µA “ “ “
	I_{CC} 15/	3005	53	GND	GND	GND	GND	GND	GND	GND	GND	“	GND					GND	GND	GND	“	V_{CC}		170	mA

See footnotes at end of table.

TABLE III. Group A inspection for device types 02, 08, and 10 – Continued.

Terminal conditions (outputs not designated are open or resistive coupled to GND or voltage; inputs not designated are high ≥ 2.0 V, low ≤ 0.8 V, or open).

Subgroup	Symbol	MIL-STD-883 method	Cases V,X,Y	1	2	3	4	5	6	7	8	9	10	11	12	13	14	15	16	17	18	Meas. terminal	Test limits		Unit
			Test no.	A_6	A_5	A_4	A_3	A_0	A_1	A_2	A_{10}	GND	$\overline{CE}_1$	O_4	O_3	O_2	O_1	A_9	A_8	A_7	V_{CC}		Min	Max	
1 T_C = +25°C	I_{OS}	3011	54 55 56 57	1/ 10/ 11/ “ 12/	1/ 9/ 10/ “ “	1/ “ “ 12/	1/ 21/ “ “ “	1/ 13/ “ “ “	1/ “ “ “	1/ “ “ “	1/ 10/ “ “ 12/	GND “ “ “	0.5V “ “ “	GND	GND	GND	GND	1/ 9/ “ “ “	1/ 13/ “ “ “	1/ “ “ “	5.5V “ “ “	O_4 O_3 O_2 O_1	-15 “ “ “	-100 “ “ “	mA “ “ “
2	Same tests, terminal conditions, and limits as for subgroup 1, except T_C = +125°C and V_{IC} tests are omitted.																								
3	Same tests, terminal conditions, and limits as for subgroup 1, except T_C = -55°C and V_{IC} tests are omitted.																								
7 T_C = +25°C	Func-tional tests	4/	58	4/	4/	4/	4/	4/	4/	4/	4/	GND	4/	4/	4/	4/	4/	4/	4/	4/	4/	Outputs		4/	
8	Same tests, terminal conditions, and limits as for subgroup 7, except TC = +125°C and TC = -55°C.																								
9 T_C = +25°C	t_{PHL1} t_{PLH1} t_{PHL2} t_{PLH2}	GALPAT Fig. 6 GALPAT Fig. 6 Sequen-tial Fig. 6 Sequen-tial Fig. 6	59 60 61 62	5/ 5/ 7/ 7/	5/ 5/ 7/ 7/	5/ 5/ 7/ 7/	5/ 5/ 7/ 7/	5/ 5/ 7/ 7/	5/ 5/ 7/ 7/	5/ 5/ 7/ 7/	5/ 5/ 7/ 7/	GND “ “ “	GND GND 7/ 7/	6/ “ “ “	6/ “ “ “	6/ “ “ “	6/ “ “ “	5/ 5/ 7/ 7/	5/ 5/ 7/ 7/	5/ 5/ 7/ 7/	5/ 5/ 7/ 7/	Outputs “ “ “		8/ “ “ “	ns “ “ “
10	Same tests, terminal conditions, and limits as for subgroup 9, except T_C = +125°C.																								
11	Same tests, terminal conditions, and limits as for subgroup 9, except T_C = -55°C.																								

See footnotes at end of table.

TABLE III. Group A inspection for device type 03.

Terminal conditions (outputs not designated are open or resistive coupled to GND or voltage; inputs not designated are high ≥ 2.0 V, low ≤ 0.8 V, or open).

Subgroup	Symbol	MIL-STD-883 method	Cases J,K Test no.	1 A_7	2 A_6	3 A_5	4 A_4	5 A_3	6 A_2	7 A_1	8 A_0	9 O_1	10 O_2	11 O_3	12 GND	13 O_4	14 O_5	15 O_6	16 O_7	17 O_8	18 CE_4	19 CE_3	20 $\overline{CE}_2$	21 $\overline{CE}_1$	22 A_9	23 A_8	24 V_{CC}	Measured terminal	Test limits Min	Test limits Max	Unit
1 T_C = +25°C	V_{IC}		1	-10mA	-10mA	-10mA	-10mA	-10mA	-10mA	-10mA	-10mA				GND						-10mA	-10mA	-10mA	-10mA	-10mA	-10mA	4.5V	A_7		-1.5	V
			2												"												"	A_6		"	"
			3												"												"	A_5		"	"
			4												"												"	A_4		"	"
			5												"												"	A_3		"	"
			6												"												"	A_2		"	"
			7												"												"	A_1		"	"
			8												"												"	A_0		"	"
			9												"												"	CE_4		"	"
			10												"												"	$\overline{CE}_3$		"	"
			11												"												"	$\overline{CE}_2$		"	"
			12												"												"	$\overline{CE}_1$		"	"
			13												"												"	A_9		"	"
			14												"												"	A_8		"	"
	V_{OL}	3007	15	1/ 2/ 16/	1/	1/	1/	1/	1/	1/	1/	8mA	8mA	8mA	"						5.5V	5.5V	0.5V	0.5V	1/ 16/	1/	"	O_1		0.5	V
			16	"	"	"	"	"	"	"	"				"						"	"	"	"	"	"	"	"	O_2		"	"
			17	"	"	"	"	"	"	"	"				"	8mA					"	"	"	"	"	"	"	"	O_3		"	"
			18	"	"	"	"	"	"	"	"				"		8mA				"	"	"	"	"	"	"	"	O_4		"	"
			19	"	"	"	"	"	"	"	"				"			8mA			"	"	"	"	"	"	"	"	O_5		"	"
			20	"	"	"	"	"	"	"	"				"				8mA		"	"	"	"	"	"	"	"	O_6		"	"
			21	"	"	"	"	"	"	"	"				"					8mA	"	"	"	"	"	"	"	"	O_7		"	"
			22	"	"	"	"	"	"	"	"				"						"	"	"	"	"	"	"	"	O_8		"	"
	I_{IL}	3009	23	0.5V	0.5V	0.5V	0.5V	0.5V	0.5V	0.5V	0.5V				"						0.5V	0.5V	0.5V	0.5V	0.5V	0.5V	5.5V	A_7	-1.0	-250	µA
			24												"												"	A_6	"	"	"
			25												"												"	A_5	"	"	"
			26												"												"	A_4	"	"	"
			27												"												"	A_3	"	"	"
			28												"												"	A_2	"	"	"
			29												"												"	A_1	"	"	"
			30												"												"	A_0	"	"	"
			31												"												"	CE_4	"	"	"
			32												"												"	$\overline{CE}_3$	"	"	"
			33												"												"	$\overline{CE}_2$	"	"	"
			34												"												"	CE_1	"	"	"
			35												"												"	A_9	"	"	"
			36												"												"	A_8	"	"	"
	I_{IH1}	3010	37	5.5V	5.5V	5.5V	5.5V	5.5V	5.5V	5.5V	5.5V				"						5.5V	5.5V		5.5V	5.5V	5.5V	"	A_7		50	µA
			38												"												"	A_6		"	"
			39												"												"	A_5		"	"
			40												"												"	A_4		"	"
			41												"												"	A_3		"	"
			42												"												"	A_2		"	"
			43												"												"	A_1		"	"
			44												"												"	A_0		"	"
			45												"												"	$\overline{CE}_4$		"	"
			46												"												"	$\overline{CE}_3$		"	"
			47												"												"	CE_1		"	"
			48												"												"	A_9		"	"
			49												"												"	A_8		"	"
	I_{IH2} 17/		50												"								4.5V				"	$\overline{CE}_2$		100	µA
	I_{CEX}		51									5.2V	5.2V	5.2V	"						0.5V	0.5V	5.5V	5.5V			"	O_1		"	µA
			52												"						"	"	"	"			"	O_2		"	"
			53												"						"	"	"	"			"	O_3		"	"
			54												"	5.2V					"	"	"	"			"	O_4		"	"

See footnotes at end of table.

TABLE III. Group A inspection for device type 03 – Continued.

Terminal conditions (outputs not designated are open or resistive coupled to GND or voltage; inputs not designated are high ≥ 2.0 V, low ≤ 0.8 V, or open).

Subgroup	Symbol	MIL-STD-883 method	Cases J,K Test no.	1 A_7	2 A_6	3 A_5	4 A_4	5 A_3	6 A_2	7 A_1	8 A_0	9 O_1	10 O_2	11 O_3	12 GND	13 O_4	14 O_5	15 O_6	16 O_7	17 O_8	18 CE_4	19 CE_3	20 $\overline{CE}_2$	21 $\overline{CE}_1$	22 A_9	23 A_8	24 V_{CC}	Measured terminal	Test limits Min	Test limits Max	Unit
1 T_C = +25°C	I_{CEX}		55 56 57 58												GND " " "		5.2V	5.2V	5.2V	5.2V	0.5V " " "	0.5V " " "	5.5V " " "	5.5V " " "			5.5V " " "	O_5 O_6 O_7 O_8		100 " " "	µA " " "
	I_{CC}	3005	59	GND	GND	GND	GND	GND	GND	GND	GND	GND			"						GND	GND	GND	GND	GND	GND	"	V_{CC}		185	mA
2	Same tests, terminal conditions, and limits as for subgroup 1, except T_C = +125°C and V_{IC} tests are omitted.																														
3	Same tests, terminal conditions, and limits as for subgroup 1, except T_C = -55°C and V_{IC} tests are omitted.																														
7 T_C = +25°C	Func-tional tests	4/	60	4/	4/	4/	4/	4/	4/	4/	4/	4/	4/	4/	GND	4/	4/	4/	4/	4/	4/	4/	4/	4/	4/	4/	4/	Outputs		4/	
8	Same tests, terminal conditions, and limits as for subgroup 7, except T_C = +125°C and T_C = -55°C.																														
9 T_C = +25°C	t_{PHL1}	GALPAT Fig. 6	61	5/	5/	5/	5/	5/	5/	5/	5/	6/	6/	6/	GND	6/	6/	6/	6/	6/	5.5V	5.5V	GND	GND	5/	5/	5/	Outputs		8/	ns
	t_{PLH1}	GALPAT Fig. 6	62	5/	5/	5/	5/	5/	5/	5/	5/	"	"	"	"	"	"	"	"	"	5.5V	5.5V	GND	GND	5/	5/	5/	"		"	"
	t_{PHL2}	Sequen-tial Fig. 6	63	7/	7/	7/	7/	7/	7/	7/	7/	"	"	"	"	"	"	"	"	"	7/	7/	7/	7/	7/	7/	7/	"		"	"
	t_{PLH2}	Sequen-tial Fig. 6	64	7/	7/	7/	7/	7/	7/	7/	7/	"	"	"	"	"	"	"	"	"	7/	7/	7/	7/	7/	7/	7/	"		"	"
10	Same tests, terminal conditions, and limits as for subgroup 9, except T_C = +125°C.																														
11	Same tests, terminal conditions, and limits as for subgroup 9, except T_C = -55°C.																														

See footnotes at end of table.

TABLE III. Group A inspection for device types 04 and 09.

Terminal conditions (outputs not designated are open or resistive coupled to GND or voltage; inputs not designated are high ≥ 2.0 V, low ≤ 0.8 V, or open).

Subgroup	Symbol	MIL-STD-883 method	Cases J,K	1	2	3	4	5	6	7	8	9	10	11	12	13	14	15	16	17	18	19	20	21	22	23	24	Measured terminal	Test limits		Unit
			Test no.	A_7	A_6	A_5	A_4	A_3	A_2	A_1	A_0	O_1	O_2	O_3	GND	O_4	O_5	O_6	O_7	O_8	CE_4	CE_3	$\overline{CE}_2$	$\overline{CE}_1$	A_9	A_8	V_{CC}		Min	Max	
1 T_C = +25°C	V_{IC}		1	-10mA											GND												4.5V	A_7		-1.5	V
			2		-10mA										"												"	A_6		"	"
			3			-10mA									"												"	A_5		"	"
			4				-10mA								"												"	A_4		"	"
			5					-10mA	-10mA						"												"	A_3		"	"
			6							-10mA					"												"	A_2		"	"
			7								-10mA				"												"	A_1		"	"
			8												"												"	A_0		"	"
			9												"						-10mA						"	CE_4		"	"
			10												"							-10mA					"	CE_3		"	"
			11												"								-10mA				"	$\overline{CE}_2$		"	"
			12												"									-10mA			"	$\overline{CE}_1$		"	"
			13												"										-10mA		"	A_9		"	"
			14												"											-10mA	"	A_8		"	"
	V_{OL}	3007	15	1/ 2/ 16/	1/	1/	1/	1/	1/ 18/	1/	1/	19/			"						5.5V	5.5V	0.5V	0.5V	1/ 16/	1/	"	O_1		0.5	V
			16	"	"	"	"	"	"	"	"		19/		"						"	"	"	"	"	"	"	O_2		"	"
			17	"	"	"	"	"	"	"	"			19/	"	19/						"	"	"	"	"	"	"	O_3		"	"
			18	"	"	"	"	"	"	"	"				"		19/				"	"	"	"	"	"	"	"	O_4		"	"
			19	"	"	"	"	"	"	"	"				"			19/			"	"	"	"	"	"	"	"	O_5		"	"
			20	"	"	"	"	"	"	"	"				"				19/		"	"	"	"	"	"	"	"	O_6		"	"
			21	"	"	"	"	"	"	"	"				"					19/	"	"	"	"	"	"	"	"	O_7		"	"
			22	"	"	"	"	"	"	"	"				"						"	"	"	"	"	"	"	"	O_8		"	"
	V_{OH}	3006	23	1/	1/ 10/	1/ 9/ 10/	1/ 9/ 23/	1/ 9/	1/ 9/	1/ 9/	1/ 9/ 10/	-2mA			"						"	"	"	"	1/ 13/	"	"	O_1	2.4		V
			24	"	"	"	"	"	"	"	20/ 21/		-2mA		"						"	"	"	"	20/	"	"	O_2	"		"
			25	"	"	"	"	"	"	"	"			-2mA	"	-2mA					"	"	"	"	"	"	"	"	O_3	"		"
			26	"	"	"	"	"	"	"	"				"		-2mA				"	"	"	"	"	"	"	"	O_4	"		"
			27	"	"	"	"	"	"	"	"				"			-2mA			"	"	"	"	"	"	"	"	O_5	"		"
			28	"	"	"	"	"	"	"	"				"				-2mA		"	"	"	"	"	"	"	"	O_6	"		"
			29	"	"	"	"	"	"	"	"				"					-2mA	"	"	"	"	"	"	"	"	O_7	"		"
			30	"	"	"12/	"	"	"	"	12/				"					-2mA	"	"	"	"	"	"	"	"	O_8	"		"
	I_{IL}	3009	31	0.5V											"												5.5V	A_7	-1.0	-250	μA
			32		0.5V										"												"	A_6	"	"	"
			33			0.5V									"												"	A_5	"	"	"
			34				0.5V								"												"	A_4	"	"	"
			35					0.5V							"												"	A_3	"	"	"
			36						0.5V						"												"	A_2	"	"	"
			37							0.5V					"												"	A_1	"	"	"
			38								0.5V				"												"	A_0	"	"	"
			39												"						0.5V						"	CE_4	"	"	"
			40												"							0.5V					"	CE_3	"	"	"
			41												"								0.5V				"	$\overline{CE}_2$	"	"	"
			42												"									0.5V			"	$\overline{CE}_1$	"	"	"
			43												"										0.5V		"	A_9	"	"	"
			44												"											0.5V	"	A_8	"	"	"
	I_{IH1}	3010	45	5.5V											"												"	A_7		50	μA
			46		5.5V										"												"	A_6		"	"
			47			5.5V									"												"	A_5		"	"
			48				5.5V								"												"	A_4		"	"
			49					5.5V							"												"	A_3		"	"
			50						5.5V						"												"	A_2		"	"
			51							5.5V					"												"	A_1		"	"
			52								5.5V				"												"	A_0		"	"

See footnotes at end of table.

TABLE III. Group A inspection for device types 04 and 09 – Continued.

Terminal conditions (outputs not designated are open or resistive coupled to GND or voltage; inputs not designated are high ≥ 2.0 V, low ≤ 0.8 V, or open).

Subgroup	Symbol	MIL-STD-883 method	Cases J,K	1	2	3	4	5	6	7	8	9	10	11	12	13	14	15	16	17	18	19	20	21	22	23	24	Measured terminal	Test limits		Unit
			Test no.	A_7	A_6	A_5	A_4	A_3	A_2	A_1	A_0	O_1	O_2	O_3	GND	O_4	O_5	O_6	O_7	O_8	CE_4	CE_3	$\overline{CE}_2$	$\overline{CE}_1$	A_9	A_8	V_{CC}		Min	Max	
1 T_C = +25°C	I_{IH1}	3010	53												GND						5.5V	5.5V		5.5V			5.5V	CE_4		50	µA
			54												"												"	CE_3		"	"
			55												"												"	CE_1		"	"
			56												"										5.5V		"	A_9		"	"
			57												"											5.5V	"	A_8		"	"
	I_{IH2} 17/		58												"								4.5V				"	$\overline{CE}_2$		100	"
	I_{OHZ}		59									5.2V	5.2V	5.2V	"						0.5V	0.5V	5.5V	5.5V			5.5V	O_1		"	µA
			60												"						"	"	"	"			"	O_2		"	"
			61												"						"	"	"	"			"	O_3		"	"
			62												"	5.2V					"	"	"	"			"	O_4		"	"
			63												"		5.2V				"	"	"	"			"	O_5		"	"
			64												"			5.2V			"	"	"	"			"	O_6		"	"
			65												"				5.2V		"	"	"	"			"	O_7		"	"
			66												"					5.2V	"	"	"	"			"	O_8		"	"
	I_{OLZ}		67									0.5V	0.5V	0.5V	"						"	"	"	"			"	O_1		-100	µA
			68												"						"	"	"	"			"	O_2		"	"
			69												"						"	"	"	"			"	O_3		"	"
			70												"	0.5V					"	"	"	"			"	O_4		"	"
			71												"		0.5V				"	"	"	"			"	O_5		"	"
			72												"			0.5V			"	"	"	"			"	O_6		"	"
			73												"				0.5V		"	"	"	"			"	O_7		"	"
			74												"					0.5V	"	"	"	"			"	O_8		"	"
	I_{CC}	3005	75	GND	GND	GND	GND	GND	GND	GND	GND				"						GND	GND	GND	GND	GND	GND	"	V_{CC}		185	mA
	I_{OS}	3011	76	1/	1/ 10/	1/ 9/ 10/	1/ 9/ 23/	1/ 9/	1/ 9/	1/ 9/	1/ 9/ 10/	GND	GND	GND	"						5.5V	5.5V	0.5V	0.5V	1/ 13/	1/	"	O_1	-15	-100	mA
			77	"	"	"	"	"	"	"	20/ 21/				"						"	"	"	"	20/	"	"	O_2	"	"	"
			78	"	"	"	"	"	"	"	"				"						"	"	"	"	"	"	"	O_3	"	"	"
			79	"	"	"	"	"	"	"	"				"	GND					"	"	"	"	"	"	"	O_4	"	"	"
			80	"	"	"	"	"	"	"	"				"		GND				"	"	"	"	"	"	"	O_5	"	"	"
			81	"	"	"	"	"	"	"	"				"			GND			"	"	"	"	"	"	"	O_6	"	"	"
			82	"	"	"	"	"	"	"	"				"				GND		"	"	"	"	"	"	"	O_7	"	"	"
			83	"	"	12/	"	"	"	"	12/				"					GND	"	"	"	"	"	"	"	O_8	"	"	"
2	Same tests, terminal conditions, and limits as for subgroup 1, except T_C = +125°C and V_{IC} tests are omitted.																														
3	Same tests, terminal conditions, and limits as for subgroup 1, except T_C = -55°C and V_{IC} tests are omitted.																														
7 T_C = +25°C	Func-tional tests	4/	84	4/	4/	4/	4/	4/	4/	4/	4/	4/	4/	4/	GND	4/	4/	4/	4/	4/	4/	4/	4/	4/	4/	4/	4/	Outputs		4/	
8	Same tests, terminal conditions, and limits as for subgroup 7, except T_C = +125°C and T_C = -55°C.																														

See footnotes at end of table.

TABLE III. Group A inspection for device types 04 and 09 – Continued.

Terminal conditions (outputs not designated are open or resistive coupled to GND or voltage; inputs not designated are high ≥ 2.0 V, low ≤ 0.8 V, or open).

Subgroup	Symbol	MIL-STD-883 method	Cases J,K Test no.	1 A_7	2 A_6	3 A_5	4 A_4	5 A_3	6 A_2	7 A_1	8 A_0	9 O_1	10 O_2	11 O_3	12 GND	13 O_4	14 O_5	15 O_6	16 O_7	17 O_8	18 CE_4	19 CE_3	20 $\overline{CE}_2$	21 $\overline{CE}_1$	22 A_9	23 A_8	24 V_{CC}	Measured terminal	Test limits Min	Max 04	Max 09	Unit
9 T_C = +25°C	t_{PHL1}	GALPAT Fig. 6	85	5/	5/	5/	5/	5/	5/	5/	5/	6/	6/	6/	GND	6/	6/	6/	6/	6/	5.5V	5.5V	GND	GND	5/	5/	5/	Outputs		90	55	ns
	t_{PLH1}	GALPAT Fig. 6	86	5/	5/	5/	5/	5/	5/	5/	5/	"	"	"	"	"	"	"	"	"	5.5V	5.5V	GND	GND	5/	5/	5/	"		90	55	"
	t_{PHL2}	Sequen-tial Fig. 6	87	7/	7/	7/	7/	7/	7/	7/	7/	"	"	"	"	"	"	"	"	"	7/	7/	7/	7/	7/	7/	7/	"		50	30	"
	t_{PLH2}	Sequen-tial Fig. 6	88	7/	7/	7/	7/	7/	7/	7/	7/	"	"	"	"	"	"	"	"	"	7/	7/	7/	7/	7/	7/	7/	"		50	30	"
10	Same tests, terminal conditions, and limits as for subgroup 9, except T_C = +125°C.																															
11	Same tests, terminal conditions, and limits as for subgroup 9, except T_C = -55°C.																															

See footnotes at end of table.

TABLE III. Group A inspection for device type 05.

Terminal conditions (outputs not designated are open or resistive coupled to GND or voltage; inputs not designated are high ≥ 2.0 V, low ≤ 0.8 V, or open).

Subgroup	Symbol	MIL-STD-883 method	Cases J,K Test no.	1 A_7	2 A_6	3 A_5	4 A_4	5 A_3	6 A_2	7 A_1	8 A_0	9 O_1	10 O_2	11 O_3	12 GND	13 O_4	14 O_5	15 O_6	16 O_7	17 O_8	18 N/C	19 N/C	20 $\overline{CE}$	21 N/C	22 A_9	23 A_8	24 V_{CC}	Measured terminal	Test limits Min	Test limits Max	Unit
1 T_C = +25°C	V_{IC}		1	-10mA											GND												4.5V	A_7		-1.5	V
			2		-10mA										"												"	A_6		"	"
			3			-10mA									"												"	A_5		"	"
			4				-10mA								"												"	A_4		"	"
			5					-10mA							"												"	A_3		"	"
			6						-10mA						"												"	A_2		"	"
			7							-10mA					"												"	A_1		"	"
			8								-10mA				"												"	A_0		"	"
			9												"								-10mA				"	CE		"	"
			10												"										-10mA		"	A_9		"	"
			11												"											-10mA	"	A_8		"	"
	V_{OL}	3007	12	1/	1/	1/	1/	1/	1/	1/	1/	8mA			"								0.5V		1/	1/	"	O_1		0.5	V
			13	"	"	"	"	"	"	"	"		8mA		"								"		"	"	"	O_2		"	"
			14	"	"	"	"	"	"	"	"			8mA	"								"		"	"	"	O_3		"	"
			15	"	"	"	"	"	"	"	"				"	8mA							"		"	"	"	O_4		"	"
			16	"	"	"	"	"	"	"	"				"		8mA						"		"	"	"	O_5		"	"
			17	"	"	"	"	"	"	"	"				"			8mA					"		"	"	"	O_6		"	"
			18	"	"	"	"	"	"	"	"				"				8mA				"		"	"	"	O_7		"	"
			19	"	"	"	"	"	"	"	"				"					8mA			"		"	"	"	O_8		"	"
	V_{OH}	3006	20	"	"	"	"	1/ 9/	1/ 9/	1/ 9/	1/ 9/ 20/	-2mA			"								"		1/ 9/ 13/	"	"	O_1	2.4		V
			21	"	"	"	"	"	"	"	"		-2mA		"								"		20/	"	"	O_2	"		"
			22	"	"	"	"	"	"	"	"			-2mA	"								"		"	"	"	O_3	"		"
			23	"	"	"	"	"	"	"	"				"	-2mA							"		"	"	"	O_4	"		"
			24	"	"	"	"	"	"	"	"				"		-2mA						"		"	"	"	O_5	"		"
			25	"	"	"	"	"	"	"	"				"			-2mA					"		"	"	"	O_6	"		"
			26	"	"	"	"	"	"	"	"				"				-2mA				"		"	"	"	O_7	"		"
			27	"	"	"	"	"	"	"	"				"					-2mA			"		"	"	"	O_8	"		"
	I_{IL}	3009	28	0.5V											"												5.5V	A_7	-1	-250	μA
			29		0.5V										"												"	A_6	"	"	"
			30			0.5V									"												"	A_5	"	"	"
			31				0.5V								"												"	A_4	"	"	"
			32					0.5V							"												"	A_3	"	"	"
			33						0.5V						"												"	A_2	"	"	"
			34							0.5V					"												"	A_1	"	"	"
			35								0.5V				"												"	A_0	"	"	"
			36												"								0.5V				"	CE	"	"	"
			37												"										0.5V		"	A_9	"	"	"
			38												"											0.5V	"	A_8	"	"	"
	I_{IH}	3010	39	5.5V											"												"	A_7		50	μA
			40		5.5V										"												"	A_6		"	"
			41			5.5V									"												"	A_5		"	"
			42				5.5V								"												"	A_4		"	"
			43					5.5V							"												"	A_3		"	"
			44						5.5V						"												"	A_2		"	"
			45							5.5V					"												"	A_1		"	"
			46								5.5V				"												"	A_0		"	"
			47												"								5.5V				"	CE		"	"
			48												"										5.5V		"	A_9		"	"
			49												"											5.5V	"	A_8		"	"

See footnotes at end of table.

TABLE III. Group A inspection for device type 05 – Continued.

Terminal conditions (outputs not designated are open or resistive coupled to GND or voltage; inputs not designated are high ≥ 2.0 V, low ≤ 0.8 V, or open).

Subgroup	Symbol	MIL-STD-883 method	Cases J,K	1	2	3	4	5	6	7	8	9	10	11	12	13	14	15	16	17	18	19	20	21	22	23	24	Measured terminal	Test limits		Unit
			Test no.	A_7	A_6	A_5	A_4	A_3	A_2	A_1	A_0	O_1	O_2	O_3	GND	O_4	O_5	O_6	O_7	O_8	N/C	N/C	$\overline{CE}$	N/C	A_9	A_8	V_{CC}		Min	Max	
1 T_C = +25°C	I_{OHZ}		50									5.2V	5.2V	5.2V	GND	5.2V	5.2V	5.2V	5.2V	5.2V			5.5V				5.5V	O_1		100	µA
			51												"								"				"	O_2		"	"
			52												"								"				"	O_3		"	"
			53												"								"				"	O_4		"	"
			54												"								"				"	O_5		"	"
			55												"								"				"	O_6		"	"
			56												"								"				"	O_7		"	"
			57												"								"				"	O_8		"	"
	I_{OLZ}		58									0.5V	0.5V	0.5V	"	0.5V	0.5V	0.5V	0.5V	0.5V			"				"	O_1		-100	µA
			59												"								"				"	O_2		"	"
			60												"								"				"	O_3		"	"
			61												"								"				"	O_4		"	"
			62												"								"				"	O_5		"	"
			63												"								"				"	O_6		"	"
			64												"								"				"	O_7		"	"
			65												"								"				"	O_8		"	"
	I_{OS}	3011	66	1/	1/	1/	1/	1/ 9/	1/ 9/	1/ 9/	1/ 9/ 20/	GND	GND	GND	"	GND	GND	GND	GND	GND			0.5V		1/ 9/ 13/ 20/	1/	"	O_1	-15	"	µA
			67	"	"	"	"	"	"	"	"				"								"		"	"	"	O_2	"	"	"
			68	"	"	"	"	"	"	"	"				"								"		"	"	"	O_3	"	"	"
			69	"	"	"	"	"	"	"	"				"								"		"	"	"	O_4	"	"	"
			70	"	"	"	"	"	"	"	"				"								"		"	"	"	O_5	"	"	"
			71	"	"	"	"	"	"	"	"				"								"		"	"	"	O_6	"	"	"
			72	"	"	"	"	"	"	"	"				"								"		"	"	"	O_7	"	"	"
			73	"	"	"	"	"	"	"	"				"								"		"	"	"	O_8	"	"	"
	I_{CC}	3005	74	GND	GND	GND	GND	GND	GND	GND	GND				"								GND		GND	GND	"	V_{CC}		185	mA
2	Same tests, terminal conditions, and limits as for subgroup 1, except T_C = +125°C and V_{IC} tests are omitted.																														
3	Same tests, terminal conditions, and limits as for subgroup 1, except T_C = -55°C and V_{IC} tests are omitted.																														
7 T_C = +25°C	Func-tional tests	4/	75	4/	4/	4/	4/	4/	4/	4/	4/	4/	4/	4/	GND	4/	4/	4/	4/	4/			GND		4/	4/	4/	Outputs		4/	
8	Same tests, terminal conditions, and limits as for subgroup 7, except T_C = +125°C and T_C = -55°C.																														
9 T_C = +25°C	t_{PHL1}	GALPAT Fig. 6	76	5/	5/	5/	5/	5/	5/	5/	5/	6/	6/	6/	GND	6/	6/	6/	6/	6/			GND		5/	5/	5/	Outputs		8/	ns
	t_{PLH1}	GALPAT Fig. 6	77	5/	5/	5/	5/	5/	5/	5/	5/	"	"	"	"	"	"	"	"	"			GND		5/	5/	5/	"		"	"
	t_{PHL2}	Sequen-tial Fig. 6	78	7/	7/	7/	7/	7/	7/	7/	7/	"	"	"	"	"	"	"	"	"			7/		7/	7/	7/	"		"	"
	t_{PLH2}	Sequen-tial Fig. 6	79	7/	7/	7/	7/	7/	7/	7/	7/	"	"	"	"	"	"	"	"	"			7/		7/	7/	7/	"		"	"
10	Same tests, terminal conditions, and limits as for subgroup 9, except T_C = +125°C.																														
11	Same tests, terminal conditions, and limits as for subgroup 9, except T_C = -55°C.																														

See footnotes at end of table.

TABLE III. Group A inspection for device type 06.

Terminal conditions (outputs not designated are open or resistive coupled to GND or voltage; inputs not designated are high ≥ 2.0 V, low ≤ 0.8 V, or open).

Subgroup	Symbol	MIL-STD-883 method	Cases J,K	1	2	3	4	5	6	7	8	9	10	11	12	13	14	15	16	17	18	19	20	21	22	23	24	Measured terminal	Test limits		Unit
			Test no.	A_7	A_6	A_5	A_4	A_3	A_2	A_1	A_0	O_1	O_2	O_3	GND	O_4	O_5	O_6	O_7	O_8	N/C	N/C	$\overline{CE}$	N/C	A_9	A_8	V_{CC}		Min	Max	
1 T_C = +25°C	V_{IC}		1	-10mA											GND												4.5V	A_7		-1.5	V
			2		-10mA										"												"	A_6		"	"
			3			-10mA									"												"	A_5		"	"
			4				-10mA								"												"	A_4		"	"
			5					-10mA							"												"	A_3		"	"
			6						-10mA						"												"	A_2		"	"
			7							-10mA					"												"	A_1		"	"
			8								-10mA				"												"	A_0		"	"
			9												"								-10mA				"	$\overline{CE}$		"	"
			10												"										-10mA		"	A_9		"	"
			11												"											-10mA	"	A_8		"	"
	V_{OL}	3007	12	1/	1/	1/	1/	1/	1/	1/	1/	8mA	8mA	8mA	"								0.5V		1/	1/	"	O_1		0.5	V
			13	"	"	"	"	"	"	"	"				"	8mA							"		"	"	"	O_2		"	"
			14	"	"	"	"	"	"	"	"				"		8mA						"		"	"	"	O_3		"	"
			15	"	"	"	"	"	"	"	"				"			8mA					"		"	"	"	O_4		"	"
			16	"	"	"	"	"	"	"	"				"				8mA				"		"	"	"	O_5		"	"
			17	"	"	"	"	"	"	"	"				"					8mA			"		"	"	"	O_6		"	"
			18	"	"	"	"	"	"	"	"				"								"		"	"	"	O_7		"	"
			19	"	"	"	"	"	"	"	"				"								"		"	"	"	O_8		"	"
	I_{IL}	3009	20	0.5V											"												5.5V	A_7	-1.0	-250	µA
			21		0.5V										"												"	A_6	"	"	"
			22			0.5V									"												"	A_5	"	"	"
			23				0.5V								"												"	A_4	"	"	"
			24					0.5V							"												"	A_3	"	"	"
			25						0.5V						"												"	A_2	"	"	"
			26							0.5V					"												"	A_1	"	"	"
			27								0.5V				"												"	A_0	"	"	"
			28												"								0.5V				"	$\overline{CE}$	"	"	"
			29												"										0.5V		"	A_9	"	"	"
			30												"											0.5V	"	A_8	"	"	"
	I_{IH1}	3010	31	5.5V											"												"	A_7		50	µA
			32		5.5V										"												"	A_6		"	"
			33			5.5V									"												"	A_5		"	"
			34				5.5V								"												"	A_4		"	"
			35					5.5V							"												"	A_3		"	"
			36						5.5V						"												"	A_2		"	"
			37							5.5V					"												"	A_1		"	"
			38								5.5V				"												"	A_0		"	"
			39												"										0.5V		"	A_9		"	"
			40												"											0.5V	"	A_8		"	"
	I_{IH2}		41												"								4.5V				"	$\overline{CE}$		100	µA
	I_{CEX}		42									5.2V	5.2V	5.2V	"												5.5V	O_1		"	µA
			43												"	5.2V											"	O_2		"	"
			44												"		5.2V										"	O_3		"	"
			45												"			5.2V									"	O_4		"	"
			46												"				5.2V								"	O_5		"	"
			47												"					5.2V							"	O_6		"	"
			48												"												"	O_7		"	"
			49												"												"	O_8		"	"

See footnotes at end of table.

TABLE III. Group A inspection for device type 06 – Continued.

Terminal conditions (outputs not designated are open or resistive coupled to GND or voltage; inputs not designated are high ≥ 2.0 V, low ≤ 0.8 V, or open).

Subgroup	Symbol	MIL-STD-883 method	Cases J,K	1	2	3	4	5	6	7	8	9	10	11	12	13	14	15	16	17	18	19	20	21	22	23	24	Measured terminal	Test limits		Unit
			Test no.	A_7	A_6	A_5	A_4	A_3	A_2	A_1	A_0	O_1	O_2	O_3	GND	O_4	O_5	O_6	O_7	O_8	N/C	N/C	$\overline{CE}$	N/C	A_9	A_8	V_{CC}		Min	Max	
1 T_C = +25°C	I_{CC}	3006	50	GND	GND	GND	GND	GND	GND	GND	GND				GND								GND		GND	GND	5.5V	V_{CC}		185	mA
2	Same tests, terminal conditions, and limits as for subgroup 1, except T_C = +125°C and V_{IC} tests are omitted.																														
3	Same tests, terminal conditions, and limits as for subgroup 1, except T_C = -55°C and V_{IC} tests are omitted.																														
7 T_C = +25°C	Func-tional tests	4/	51	4/	4/	4/	4/	4/	4/	4/	4/	4/	4/	4/	GND	4/	4/	4/	4/	4/			4/			4/	4/	Outputs		4/	
8	Same tests, terminal conditions, and limits as for subgroup 7, except T_C = +125°C and T_C = -55°C.																														
9 T_C = +25°C	t_{PHL1}	GALPAT Fig. 6	76	5/	5/	5/	5/	5/	5/	5/	5/	6/	6/	6/	GND	6/	6/	6/	6/	6/			GND		5/	5/	5/	Outputs		8/	ns
	t_{PLH1}	GALPAT Fig. 6	77	5/	5/	5/	5/	5/	5/	5/	5/	"	"	"	"	"	"	"	"	"			GND		5/	5/	5/	"		"	"
	t_{PHL2}	Sequen-tial Fig. 6	78	7/	7/	7/	7/	7/	7/	7/	7/	"	"	"	"	"	"	"	"	"			7/		7/	7/	7/	"		"	"
	t_{PLH2}	Sequen-tial Fig. 6	79	7/	7/	7/	7/	7/	7/	7/	7/	"	"	"	"	"	"	"	"	"			7/		7/	7/	7/	"		"	"
10	Same tests, terminal conditions, and limits as for subgroup 9, except T_C = +125°C.																														
11	Same tests, terminal conditions, and limits as for subgroup 9, except T_C = -55°C.																														

See footnotes at end of table.

TABLE III. Group A inspection – Continued.

1/ For programmed devices, select an appropriate address to acquire the desired output state.

2/ For unprogrammed device types 01 (circuit A), apply 10.0 V on pin 1 (A_6) and for unprogrammed device type 02 (circuit A), apply 13.0 V on pins 1 and 2 (A_6, A_5); for unprogrammed device types 03, apply 10.0 V on pin 1 (A_7) and for the unprogrammed device type 04, apply 13.0 V on pins 1 and 2 (A_7, A_6) (circuit A).

3/ I_{OL} = 12 mA for circuits A, C, E, G and H devices; I_{OL} = 16 mA for circuits B, D, and F devices.

4/ The functional tests shall verify that no fuses are blown for unprogrammed devices or that the truth table specified in the altered item drawing exists for programmed devices (see table II and 3.3.2.2).
All bits shall be tested. The functional tests shall be performed with V_{CC} = 4.5 V and V_{CC} = 5.5 V.
Terminal conditions shall be as follows:

a. Inputs: H = 3.0 V, L = 0.0 V.
b. Outputs: Output voltage shall be either:
   (1) H = 2.4 V minimum and L = 0.5 V maximum when using a high speed checker double comparator, or
   (2) H $\geq$ 1.0 V and L $<$ 1.0 V when using a high speed checker single comparator.

5/ GALPAT (PROGRAMMED PROM).

This program will test all bits in the array, the addressing and interaction between bits for ac performance t_{PLH1} and t_{PHL1} . Each bit in the pattern is fixed by being programmed with an “H” or “L”. The GALPAT tests shall be performed with V_{CC} = 4.5 V and 5.5 V. For manufacturer-programmed PROM only (see 3.8.2). When testing device type 10, the t_{PHL1} and t_{PLH1} limits shall be verified by performing a sequential test pattern outline in footnote 7/.

Description:

Step 1. Word 0 is read.
Step 2. Word 1 is read.
Step 3. Word 0 is read
Step 4. Word 2 is read.
Step 5. Word 0 is read.
Step 6. The reading procedure continues back and forth between word 0 and the next higher numbered word until word 1023 or 2047 (as applicable) is reached, then increments to the next word and reads back and forth as in step 1 through step 6 and shall include all words.
Step 7. Pass execution time = (n^2 + n) x cycle time. n = 1024 or 2048 (as applicable).

6/ The outputs are loaded per figure 6.

7/ SEQUENTIAL (PROGRAMMED PROM).

This program will test all bits in the array for t_{PHL2} and t_{PLH2}. The sequential tests shall be performed with V_{CC} = 4.5 V and 5.5 V.

Description:

Step 1. Each word in the pattern is tested from the enable lines to the output lines for recovery.
Step 2. Word 0 is addressed. Enable line is pulled high to low and low to high. t_{PHL2} and t_{PLH2} are read.
Step 3. Word 1 is addressed. Same enable sequence as above.
Step 4. The reading procedure continues until word 1023 or 2047 (as applicable) is reached.
Step 5. Pass execution times 1024 or 2048 (as applicable) x cycle time.

TABLE III. Group A inspection – Continued.

8/

Device type	t_{PHL1} (ns)	t_{PLH1} (ns)	t_{PHL2} (ns)	t_{PLH2} (ns)
01, 02	125	125	60	60
03, 04, 05, 06	90	90	50	50
Circuit F	90	90	50	50
Circuit B device 08	55	55	30	30
Circuit H device08	90	90	50	50
09	55	55	30	30
10	55	55	30	30

9/ For unprogrammed devices (circuit C), apply 10.0 V on pin 15 (A_9), 0.5 V on pin 2 (A_5) and 5.0 V to all other address pins for device types 02 and 10; device types 04 and 09, apply 10 V on pin 8 (A_0) and 5.0 V on pins 7, 6, 5, 4, 3, (A_1, A_2, A_3, A_4, A_5); device type 05, apply 10 V on pin 22 (A_9), 0.5 V on pins 8, 7, 6, 5 (A_0, A_1, A_2, A_3) and 5.0 V to all other address pins. For unprogrammed devices (circuit F) apply 12.0 V on pin 5 (A_0) for device types 02 and 08.

10/ For unprogrammed devices (circuit G), apply 10.5 V to pins 1 and 8 (A_6 and A_{10}), apply 0.0 V to pin 2 (A_5) and apply 0.0 V to pin 2 (A_5) and apply 3.0 V to all other address pins for device types 01 and 02; apply 10.5 V to pin 3 (A_5), apply to 0.0 V to pins 2 and 8 (A_6 and A_0), and apply 3.0 V to all other address pins for device types 03 and 04.

11/ For unprogrammed devices, apply 12.0 V on pin 1 (A_6) for device types 02 and 08 (circuit B).

12/ For unprogrammed devices (circuit G), apply 10.5 V on pin 1 and 8 (A_6 and A_{10}), apply 0.0 V to pin 3 (A_4) and apply 3.0 V to all address pins for device type 02, apply 10.5 V to pin 3 (A_5), apply 0.0 V to pin 8 (A_0) and apply 3.0 V to all other address pins for device type 04.

13/ For unprogrammed device type 02 (with date codes before 8501), apply 10.0 V pin 5 (A_0); 0.5 V on pin 16 (A_8), and 5.0 V on all other address pins; and for unprogrammed device type 04 (with date codes before 8501) (circuit C), apply 10.0 V on pin 22 (A_9) and 5.0 V on all other address pins.

14/ Circuit B, device type 08, apply 2.4 V.

15/ For device type 08 and 10: Electrical supply current I_{CC} test maximum limit is 185 mA.

16/ For unprogrammed devices (circuit B), apply 12.0 V on pins 22 and 1 (A_9 and A_7) for device types 03 and 04.

17/ At the manufacturer's option, this may be performed with V_{IN} = 5.5 V and test limits of 50 μA maximum.

18/ For unprogrammed devices (circuit F) apply 12.0 V on pin 6 (A_2) and all other inputs at 0 V for device type 04.

19/ I_{OL} = 8 mA for circuits A, B, C, D, E, and G devices; I_{OL} = 16 mA for circuit F devices.

TABLE III. Group A inspection – Continued.

20/ For unprogrammed devices (circuit D), apply 12.0 V on pins 8 and 22 (A_0 and A_9), select an appropriate address to acquire the desired output state.

21/ For unprogrammed device type 03 (circuit E), apply 13.0 V on pin 4 (A_4) and pin 8 (A_0); and for unprogrammed device type 04 (circuit E), apply 13.0 V on pin 8 (A_0).

22/ For unprogrammed device type 02 and 08 (circuit H), apply 5.0 V on pin 18, 0.0V to pins 5, 6, 7 and 8, 3.0V to pins 1, 2, 3, 15, 16 and 17, 9.0V to pin 4.

23/ For unprogrammed device type 04 (circuit H) apply 5.0V to pin 24; 0.0V to pins 3, 5, 6, 7, 8, 20 and 21; 3.0V to pins 1, 2, 18, 19, 22 and 23; 9.0V to pin 4.

4.6 Programming procedure identification. The programming procedure to be utilized shall be identified by the manufacturer's circuit designator. The circuit designator is cross referenced in paragraph 6.7 herein with the manufacturer's symbol or CAGE number.

4.7 Programming procedure for circuit A. The waveforms on figure 5A, the programming characteristics in table IVA and the following procedures shall be used for programming the device.

a. Connect the device in the electrical configuration for programming. The waveforms on figure 5A and the programming characteristics in table IVA shall apply to these procedures.

b. Address the PROM with the binary address of the word to be programmed. Address inputs are TTL compatible. An open circuit shall not be used to address the PROM.

c. Apply V_{PL} voltage to V_{CC}.

d. Bring the $\overline{CE}_X$ inputs high and the CE_X inputs low to disable the device. The chip enables are TTL compatible. An open circuit shall not be used to disable the device.

e. Disable the programming circuitry by applying a voltage of V_{OPD} to the outputs of the PROM.

f. Raise V_{CC} to V_{PH} with rise time less than or equal to t_{TLH}.

g. After a delay equal to or greater than t_{D1} apply only one pulse with amplitude of V_{OPE} and duration of t_p to the output selected for programming. Note that the PROM is supplied with fuses intact, which generates an output high. Programming a fuse will cause the output to go low.

h. Lower V_{CC} to V_{PL} following a delay to t_{D2} from programming enable pulse applied to an output.

i. Enable the PROM for verification by applying V_{IL} to $\overline{CE}_X$ and V_{IH} to CE_X.

j. Apply V_{PHV} to V_{CC} and verify bit is programmed.

k. Repeat steps 4.7a through 4.7j for all other bits to be programmed in the PROM.

l. For class S and B devices, if any bit does not verify as programmed, it shall be considered a programming reject.

TABLE IVA. Programming characteristics for circuit A. 1/

Parameter	Symbol	Limits 2/			Unit
		Min	Recommended	Max	
Address input voltage 3/	V_{IH}	2.4	5.0	5.0	V
	V_{IL}	0.0	0.4	0.5	"
Programming	V_{PH} 4/	10.75	11.0	11.25	V
Voltage to V_{CC} low	V_{PL}	0.0	0.0	1.5	V
Program verify	V_{PHV}	---	5.5	---	V
Verify voltage	V_R 5/	4.5	---	5.5	V
Programming input low current at V_{PH}	I_{ILP}	---	-300	-600	µA
Programmed voltage (V_{CC}) transition time	t_{TLH}	1	5	10	µs
	t_{THL}	1	5	10	"
Programming delay	t_{D1}	10	10	20	µs
	t_{D2}	1	5	5	"
Programming pulse width	t_P 6/	90	100	110	µs
Programming duty cycle	PDC	---	30	60	%
Output voltage, enable	V_{OPE} 7/	10.5	10.5	11.0	V
Output voltage, disable	V_{OPD}	0.0	5.0	5.5	V

1/ During the programming the chip must be disabled for proper operation.

2/ T_C = +25°C.

3/ No inputs should be left open for V_{IH}.

4/ V_{PH} source must be capable of supplying one ampere.

5/ It is recommended that post programming dual verification be made at V_R minimum and V_R maximum.

6/ Note step j in programming procedure.

7/ V_{OPE} source must be capable of supplying 10 mA minimum.

4.8 Programming procedure for circuit B, device types 03 and 04. The waveforms on figure 5B, the programming characteristics in table IVB and the following procedures shall apply for programming the device:

a. Connect the device in the electrical configuration for programming.

b. Raise V_{CC} to 5.5 volts.

c. Address the PROM with the binary address of the selected word to be programmed. Address inputs are TTL compatible.

d. Disable the chip by applying V_{IH} to the CE inputs and V_{IL} to the CE inputs. The chip enable inputs are TTL compatible.

e. Apply the V_{PP} pulse to the programming pin (CE_2). In order to insure that the output transistor is off before increasing the voltage on the output pin, the programming pin's voltage pulse shall precede the output pin's programming pulse by T_{D1} and leave after the output pin's programming pulse by T_{D2} (see figure 5B).

f. Apply only one V_{OUT} pulse with duration of t_P to the output selected for programming. The outputs shall be programmed one output at a time, since internal decoding circuitry is capable of sinking only one unit of programming current at a time. Note that the PROM is supplied with fuses generating a high-level logic output. Programming a fuse will cause the output to go to a low-level logic in the verify mode.

g. Other bits in the same word may be programmed sequentially by applying V_{OUT} pulses to each output to be programmed.

h. Repeat 4.8c through 4.8g for all other bits to be programmed.

i. Enable the chip by applying V_{IL} to the $\overline{CE}$. Inputs and V_{IH} to the CE inputs, and verify the program. Verification may check for a low output by requiring the device to sink 12 mA at V_{CC} = 4.0 V and 0.2 mA at V_{CC} = 7.0 V at T_C = 25°C.

j. For classes S and B devices, if any bit does not verify as programmed, it shall be considered a programming reject.

TABLE IVB. Programming characteristics for circuit B, device types 03 and 04.

Parameter	Symbol	Conditions	Limits 1/			Unit
			Min	Recommended	Max	
V_{CC} required during programming	V_{CCP}		5.4	5.5	5.6	V
Rise time of programming pulse to data out or programming pin	t_{TLH}		0.34	0.40	0.46	V/µs
Programming voltage on programming pin	V_{PP}		32.5	33	33.5	V
Output programming voltage	V_{OUT}		25.5	26	26.5	V
Programming pin pulse width ($\overline{CE}_2$)	t_{PP}	Chip disabled, V_{CC} = 5.5 V		100	180	ns
Pulse width of programming voltage	t_P	Chip disabled, V_{CC} = 5.5 V	1		40	µs
Required current limit of power supply feeding programming pin and output during programming	I_L	V_{PP} = 33 V, V_{OUT} = 26 V, V_{CC} = 5.5 V	240			mA
Required time delay between disabling memory output and application of output programming pulse	T_{D1}	Measured at 10% levels	70	80	90	µs
Required time delay between removal of programming pulse and enabling memory output	T_{D2}	Measured at 10% levels	100			ns
Output current during verification	I_{OLV1}	Chip enabled, V_{CC} = 4.0 V	11	12	13	mA
	I_{OLV2}	Chip enabled, V_{CC} = 7.0 V	0.19	0.2	0.21	mA
Address input voltage	V_{IH}		2.4	5.0	5.5	V
	V_{IL}		0.0	0.4	0.8	V
Maximum duty cycle during automatic programming of programming pin and output pin	D.C	t_P / t_C			25	%

1/ T_C = +25°C.

4.8.1 Programming procedure for circuit B, device types 01, 02, and 08. The waveforms on figure 5B, (device types 01, 02, and 08), the programming characteristics in table IVB (device types 01, 02, and 08), and the following procedures shall apply for programming the device:

a. Connect the device in the electrical configuration for programming.

b. Apply V_{IH} to $\overline{CE}_1$ and the binary address of the PROM word to be programmed. Raise V_{CC} to V_{CCP}.

c. After a t_D delay, apply only one V_{OP} to the output to be programmed high.
Apply V_{OP} to one output at a time.

d. After a t_D delay, a pulse $\overline{CE}_1$ to a V_{IL} level for a duration of t_P.

e. After a t_P and t_D delay, remove V_{OP} from the programmed output.

f. Other bits in the same word may be programmed sequentially while the V_{CC} input is at the V_{CCP} level by applying V_{OP} pulses to each output to be programmed and pulsing $\overline{CE}_1$ to the V_{IL} level, allowing for proper delays between V_{OP} and $\overline{CE}_1$.

g. Repeat 4.8.1b through 4.8.1e for all other bits to be programmed.

h. To verify programming, lower V_{CCP} to V_{CC}. Connect a 10 kΩ resistor between each output and V_{CC}. Apply V_{IL} to $\overline{CE}_1$ input. The programmed outputs should remain in the high state and the unprogrammed outputs should go to the low level.

i. For classes S and B devices, if any bit does not verify as programmed, it shall be considered a programming reject.

TABLE IVB. Programming characteristics for circuit B, device types 01, 02, and 08.

Parameter	Symbol	Conditions	Limits 1/			Unit
			Min	Recommended	Max	
V_{CC} required during programming	V_{CCP}		11.5	11.75	12.0	V
V_{OUT} current limit during programming	I_{OP}		20	25	30	mA
Output programming voltage	V_{OUT}		10.5	11.0	11.5	V
Pulse width of programming voltage	t_P		9	10	11	µs
Programming delay	t_D		0	1	10	µs
V_{CCP} or V_{OUT} transition time	t_{TLH}	Rise time of V_{CC} or V_{OUT}	1	5	10	V/µs
V_{CCP} current	I_{CCP}		800	900	1000	mA
Low V_{CC} for verification	V_{CCL}		4.2	4.3	4.4	V
High V_{CC} for verification	V_{CCH}		5.8	6.0	6.2	V
Address input voltage	V_{IH}		2.4	3.0	5.5	V
	V_{IL}		0.0	0.0	0.5	V
Maximum duty cycle during automatic programming of programming pin and output pin	D.C	t_P / t_C		25	25	%

1/ T_C = +25°C.

4.9 Programming procedure for circuit C and H. The waveforms on figure 5C, the programming characteristics in table IVC and the following procedures shall apply for programming the device:

a. Connect the device in the electrical configuration for programming.

b. Terminate all device outputs with a 10 k Ω resistor to V_{CC}.
Apply V_{IH} to the $\overline{CE}$ inputs and V_{IL} to the CE inputs

c. Address the PROM with the binary address of the selected word to be programmed. Raise V_{CC} to V_{CCP}.

d. After a t_D delay (10 μs), apply only one V_{OUT} pulse to the output to be programmed.
Program one output at a time

e. After a t_D delay (10 μs), pulse $\overline{CE}$ input to logic "0" for a duration of t_P.

f. After a t_D delay (10 μs), remove the V_{OUT} pulse from the programmed output. Programming a fuse will cause the output to go to a high-level logic in the verify mode.

g. Other bits in the same word may be programmed sequentially while the V_{CC} input is at the V_{CCP} level by applying V_{OUT} pulses to each output to be programmed allowing a delay of t_D between pulses as shown on figure 5C.

h. Repeat 4.9c through 4.9g for all other bits to be programmed.

i. To verify programming after t_D (10 μs) delay, lower V_{CC} to V_{CCH} and apply a logic "0" level to both $\overline{CE}$ Inputs and logic "1" level to CE inputs. The programmed output should remain in the "1" state. Again, lower V_{CC} and V_{CCL} and verify that the programmed output remains in the "1" state.

j. For class S and B devices, if any bit does not verify as programmed, it shall be considered a programming reject.

TABLE IVC. Programming characteristics for circuit C and H.

Parameter	Symbol	Conditions	Limits 1/			Unit
			Min	Recommended	Max	
Programming voltage	V_{CCP} 1/	I_{CCP} = 375 ±75 mA transient or steady-state	8.5	8.75	9.0	V
Verification upper limit	V_{CCH}		5.3	5.5	5.7	V
Verification lower limit	V_{CCL}		4.3	4.5	4.7	V
Verify threshold	V_S 2/		1.4	1.5	1.6	V
Programming supply current	I_{CCP}	V_{CCP} = +8.75 ±0.25 V	300	350	400	mA
Input voltage high level "1"	V_{IH}		2.4		5.5	V
Input voltage low level "0"	V_{IL}		0	0.4	0.8	V
Input current	I_{IH}	V_{IH} = +5.5 V			50	µA
Input current	I_{IL}	V_{IL} = +0.4 V			-500	µA
Output programming voltage	V_{OUT} 3/	I_{OUT} = 200 ±20 mA, transient or steady-state	16	17	18	V
Output programming current	I_{OUT}	V_{OUT} = +17 ±1 V	180	200	220	mA
Programming voltage transition time	t_{TLH}		10		50	µs
$\overline{CE}$ programming pulse width	t_P		0.3	0.4	0.5	ms
Pulse sequence delay	t_D		10			µs
Programming duty cycle	t_{PR} / $t_{PR}+t_{PS}$				50	%

1/ Bypass V_{CC} to GND with a 0.01 µF capacitor to reduce voltage spikes.

2/ V_S is the sensing threshold of the PROM output voltage for a programmed bit. It normally constitutes the reference voltage applied to a comparator circuit to verify a successful fusing attempt.

3/ Care should be taken to insure the 17 ±1 V output voltage is maintained during the entire fusing cycle. The recommended supply is a constant current source clamped at the specified voltage limit.

4.10 Programming procedure for circuit D. The waveforms on figure 5D, the programming characteristics in table IVD and the following procedures shall apply for programming the device:

a. Connect the device in the electrical configuration for programming.

b. Select the word to be programmed by applying the appropriate voltages to the address pins as well as the required voltages to chip enable pins to select the device.

c. Apply the proper power, V_{CC} = 6.5 V, GND = 0 V.

d. Verify that the bit to be programmed is in the “0” logic state.

e. Enable the chip for programming by application of the chip enable voltage, $V_{P(CE)}$ = 21.0 V, $\overline{CE}_2$, CE_3, and CE_4 should be left high, and $\overline{CE}_1$ should remain low.

f. Apply I_{OP} programming current ramp to the output to be programmed. The other outputs shall be left open. Only one output may be programmed at a time. During the rise of the current ramp, the required current will be achieved to program the junction. As programming occurs, a drop in voltage can be sensed at the output of the device. Upon detection of V_{ps}, the current shall be held for t_{hap} and then shut off.

g. Verify that the programmed bits is in the “1” logic state. Lower $V_P(CE_1)$ to 0 V and read the output. Note that the PROM is supplied with fuses generating a low level logic output. Programming a fuse will cause the output to go to a high level logic in the verify mode.

h. Lower V_{CC} to 0 V. The power supply duty cycle shall be equal to or less than 50 percent.

i. If the bit verifies as not having been programmed at V_{CC} = 6.5 V, repeat the programming ramp sequence up to 15 times until the bit is programmed. If after 16 programming attempts, the bit does not program, the device shall be considered a reject.

j. If the bit verifies as having been programmed at V_{CC} = 6.5 V, one of the following two conditions shall be followed:

   (1) If the current required to program was less than I_{OP}(max), proceed to 4.10 k.

   (2) If the current required to program was equal to or greater than I_{OP}(max), the device shall be considered a reject and no further attempts at programming other bits shall be attempted.

k. Repeat 4.10a through 4.10j for all other bits to be programmed.

l. For class S and B devices, if any bit does not verify as programmed, it shall be considered a programming reject.

TABLE IVD. Programming characteristics for circuit D.

Parameter	Symbol	Conditions 1/	Limits			Unit
			Min	Recommended	Max	
Address input voltage	V_{IH}	Don't leave inputs open	2.4	5.0	5.0	V
	V_{IL}		0	0	0.4	
Chip enable programming voltage	$V_{P(CE)}$	$\overline{CE}_1 = V_{IL}$, $CE_3 = CE_4 = V_{IH}$, $V_{P(CE)} = \overline{CE}_2$	20.5	21.0	21.5	V
Programming voltage limit	$V_{OP(max)}$	Programming current ramp voltage limit	24	25	26	V
Power supply	V_{CC}		6.3	6.5	6.7	V
Power supply current	I_{CC}				250	mA
Chip enable current	I_{CE}				150	mA
Initial value of programming current ramp	$I_{OP(INIT)}$		19	20	21	mA
Maximum value of programming current ramp	$I_{OP(max)}$		155	160	165	mA
Programming current ramp (linear slew rate)	SRI_{OP}		0.9	1.0	1.1	mA/µs
V_{CC} pulse rise time	$t_r(V_{CC})$		0.2	2.0		µs
V_{CC} pulse fall time	$t_f(V_{CC})$		0.2	2.0		µs
Chip enable rise time	$t_r(\overline{CE}_2)$		3.0	4.0		µs
Chip enable fall time	$t_f(\overline{CE}_2)$		0.2	4.0		µs
Programming current ramp fall time	$t_f(I_{OP})$			0.1	0.2	µs
Hold time after programming	t_{hap}		1.4	1.5	1.6	µs
Time to reach I_{OP} initial	t_{IOP}		0.5	1.0	2.0	µs
Delay to start V_{ps} sense	t_{dss}		2.0	3.0	4.0	µs
Delay to chip enable pulse	t_{dce}			1.0		µs
Delay to programming ramp	$t_d(I_{OP})$		2.0	3.0	10	µs
Delay after programming to CE_1	t_{dRAP}		2.0	3.0	10	µs
Delay to read after programming	t_{dRAP}	Programming verification	2.0	3.0		µs

See footnote at end of table.

TABLE IVD. Programming characteristics for circuit D – Continued.

Parameter	Symbol	Conditions 1/	Limits			Unit
			Min	Recommended	Max	
Delay to V_{CC} off	$t_D(V_{CC})$			1.0		µs
Delay to read before programming	t_{dRBP}	Initial check	2.0	3.0		µs
Width to read compare strobe	t_W			1.0		µs
Voltage change at programming	V_{ps}	Typical 2.0 V	0.7	2.0		V
Time to program bit	t_{tp}	V_{ps} sensing circuit will automatically adjust this time				
Duty cycle power		Maximum duty cycle to maintain in $T_C < +85°C$		50		%
Case temperature	T_C		25	85		°C

1/ $T_C = +25°C$.

4.11 Programming procedure for circuit E. The waveforms on figure 5E, the programming characteristics in table IVE and the following procedures shall apply for programming the device:

a. Connect the device in the electrical configuration for programming.

b. Terminate all outputs with a 300 Ω resistor to V_{ONP}. Apply V_{IHP} to the $\overline{CE}_2$, CE_3, and CE_4 inputs and V_{ILP} to the $\overline{CE}_1$ inputs.

c. Address the PROM with the binary address of the selected word to be programmed. Raise V_{CC} to V_{CCP}.

d. After a delay of t_1, apply only one V_{OP} pulse with a duration of tp, t_2, and $d(V_{OP}) / dt$ to the output selected for programming. After a delay of t_2 and $d(V_{OP}) / dt$, pulse $\overline{CE}_2$ from V_{IHP} to V_{CEP} for the duration of t_P, $2d(V_{CE}) / dt$, and t_3; $\overline{CE}_2$ is then to go to the V_{ILP} level.

e. To verify programming after $\overline{CE}_1$ has been set to V_{ILP}, lower V_{CC} to V_{CCL} after a delay of t_4. The programmed output should remain in the logic “1” state.

f. The outputs should be programmed one output at a time since the internal decoding circuitry is capable of sinking only one unit of programming current at a time. Note that the PROM is supplied with fuses generating a low level logic output. Programming a fuse will cause the output to go to a high level logic in the verify mode.

g. Repeat 4.11c through 4.11f for all other bits to be programmed.

h. For class S and B devices, if any bit does not verify as programmed, it shall be considered a programming reject.

TABLE IVE. Programming characteristics for circuit E.

Parameter	Symbol	Conditions	Limits			Unit
			Min	Recommended	Max	
V_{CC} required during programming	V_{CCP}		5.0		5.5	V
High level input voltage during programming	V_{IHP}		2.4		5.5	V
Low level input voltage during programming	V_{ILP}		0.0		0.45	V
Chip enable voltage during programming	V_{CEP}	$\overline{CE}_1$ pin	14.5		15.5	V
Output voltage during programming	V_{OP}		19.5		20.5	V
Voltage on outputs not to be programmed	V_{ONP}		0		V_{CCP} +0.3	V
Current on outputs not to be programmed	I_{ONP}				20	mA
Rate of output voltage change	$d(V_{OP}) / dt$		20		250	V/µs
Rate of chip enable voltage change	$d(V_{CE}) / dt$	$\overline{CE}_1$ pin	100		1000	V/µs
Programming period	t_P		50		100	µs
V_{CC} during programming verification	V_{CCL}		4.5		5.0	µs

4.12 Programming procedure for circuit F. The waveforms on figure 5F, the programming characteristics in table IVF and the following procedures shall apply for programming the device:

a. Connect the device in the electrical configuration for programming.

b. Raise V_{CC} to 5.5 volts.

c. Address the PROM with the binary address of the selected word to be programmed. Address inputs are TTL compatible.

d. Disable the chip by applying V_{IH} to the $\overline{CE}$ inputs and V_{IL} to the $\overline{CE}$ inputs. The chip enable inputs are TTL compatible.

e. Apply the V_{PP} pulse to the programming pin ($\overline{CE}_2$). In order to insure that the output transistor is off before increasing the voltage on the output pin, the programming pin's voltage pulse shall precede the output pin's programming pulse by T_{D1} and leave after the output pin's programming pulse by T_{D2} (see figure 5F).

f. Apply only one V_{OUT} pulse with duration of t_P to the output selected for programming. The outputs shall be programmed one output at a time since internal decoding circuitry is capable of sinking only one unit of programming current at a time. Note that the PROM is supplied with fuses generating a high-level logic output. Programming a fuse will cause the output to go to a low level logic in the verify mode.

g. Other bits in the same word may be programmed sequentially by applying V_{OUT} pulses to each output to be programmed.

h. Repeat 4.12c through 4.12g for all other bits to be programmed.

i. Enable the chip by applying V_{IL} to the $\overline{CE}$ inputs and V_{IH} to the CE inputs, and verify the program. Verification may check for a low output by requiring the device to sink 12 mA at V_{CC} = 4.2 V and 0.2 mA at V_{CC} = 6.2 V at T_C = 25°C.

j. For classes S and B devices, if any bit does not verify as programmed, it shall be considered a programming reject.

TABLE IVF. Programming characteristics for circuit F.

Parameter	Symbol	Conditions	Limits 1/			Unit
			Min	Recommended	Max	
V_{CC} required during programming	V_{CCP}		5.4	5.5	5.6	V
Rise time of programming pulse to data out or programming pin	t_{TLH}		0.34	0.40	0.46	V/µs
Programming voltage on programming pin	V_{PP}		32.5	33	33.5	V
Output programming voltage	V_{OUT}		25.5	26	26.5	V
Programming pin pulse width ($\overline{CE}$)	t_{PP}	Chip disabled, V_{CC} = 5.5 V		100	180	ns
Pulse width of programming voltage	t_P	Chip disabled, V_{CC} = 5.5 V	1		40	µs
Required current limit of power supply feeding programming pin and output during programming	I_L	V_{PP} = 33 V, V_{OUT} = 26 V, V_{CC} = 5.5 V	240			mA
Required time delay between disabling memory output and application of output programming pulse	T_{D1}	Measured at 10% levels	70	80	90	µs
Required time delay between removal of programming pulse and enabling memory output	T_{D2}	Measured at 10% levels	100			ns
Output current during verification	I_{OLV1}	Chip enabled, V_{CC} = 4.2 V	11	12	13	mA
	I_{OLV2}	Chip enabled, V_{CC} = 6.2 V	0.19	0.2	0.21	mA
Address input voltage	V_{IH}		2.4	5.0	5.5	V
	V_{IL}		0.0	0.4	0.8	V
Maximum duty cycle during automatic programming of programming pin and output pin	D.C	t_P / t_C			25	%

1/ T_C = +25°C.

4.13 Programming procedure for circuit G. The waveforms on figure 5G, the programming characteristics in table IVG and the following procedures shall apply for programming the device:

a. Connect the device in the electrical configuration for programming.

b. Select the desired word by applying high or low levels to the appropriate address inputs. Disable the device by applying a high level to one or more active low chip enable inputs. Note that the address and enable inputs must be driven with TTL logic levels during programming and verification.

c. Increase V_{CC} from nominal to V_{CCP} (10.5 ±0.5 V) with a slew rate limit of I_{RR} (1.0 to 10.0 V/μs). Since V_{CC} is the source of the current required to program the fuse, as well as the I_{CC} for the device at the programming voltage, it must be capable of supplying 750 mA at 11.0 volts.

d. Select the output where a logical high is desired by raising that output voltage to V_{OP} (10.5 ±0.5 V). Limit the slew rate to I_{RR} (1.0 to 10.0 V/μs). This voltage change may occur simultaneously with the V_{CC} increase to V_{CCP}, but must not precede it. It is critical that only one output at a time be programmed since the internal circuits can only supply programming current to one bit at a time. Outputs not being programmed must be left open or connected to a high impedance source of 20 kΩ minimum (remember that the outputs of the device are disabled at this time).

e. Enable the device by taking the chip enables to a low level. This is done with a pulse PWE for 10 μs. The 10 μs duration refers to the time that the circuit (device) is enabled. Normal input levels are used and rise and fall times are not critical.

f. Verify that the bit has been programmed by first removing the programming voltage from the output and then reducing V_{CC} to 5.0 V (±0.25 V). The device must be enabled to sense the state of the outputs. During verification, the loading of the output must be within specified I_{OL} and I_{OH} limits.

g. If the device is not to be tested for V_{OH} over the entire operating range subsequent to programming, the verification of step f is to be performed at a V_{CC} level of 4.0 volt (±0.2 V). V_{OH}, during the 4 volt verification, must be at least 2.0 volts. The 4 volt V_{CC} verification assures minimum V_{OH} levels over the entire operating range.

h. Repeat steps 4.13b through 4.13f for each bit to be programmed to a high level. If the procedure is performed on an automatic programmer, the duty cycle of V_{CC} at the programming voltage must be limited to a maximum of 25 percent. This is necessary to minimize device junction temperature. After all selected bits are programmed, the entire contents of the memory should be verified.

i. For class S and B devices, if any bit does not verify as programmed it shall be considered a programming reject.

TABLE IVG. Programming characteristics for circuit G.

Parameter	Symbol	Conditions	Limits 1/			Unit
			Min	Recommended	Max	
Required V_{CC} for programming	V_{CCP}		10.0	10.5	11.0	V
I_{CC} during programming	I_{CCP}	V_{CC} = 11 V			750	mA
Required output voltage for programming	V_{OP}		10.0	10.5	11.0	V
Output current while programming	I_{OP}	V_{OUT} = 11 V			20	mA
Rate of voltage change of V_{CC} or output	I_{RR}		1.0		10.0	V/µs
Programming pulse width (enabled)	P_{WE}		9	10	11	µs
Required V_{CC} for verification	V_{CCV}		3.8	4.0	4.2	V
Maximum duty cycle for V_{CC} at V_{CCP}	MDC			25	25	%
Address setup time	t_1		100			ns
V_{CCP} set-up time	t_2	2/	5			µs
V_{CCP} hold time	t_5		100			ns
V_{OP} setup time	t_3		100			ns
V_{OP} hold time	t_4		100			ns

1/ T_C = +25°C.

2/ V_{CCP} set-up time may be greater than 0 if V_{CCP} rises at the same rate or faster than V_{OP}.

5. PACKAGING

5.1 Packaging requirements. For acquisition purposes, the packaging requirements shall be as specified in the contract or order (see 6.2). When packaging of materiel is to be performed by DoD or in-house contractor personnel, these personnel need to contact the responsible packaging activity to ascertain packaging requirements. Packaging requirements are maintained by the Inventory Control Point's packaging activity within the Military Service or Defense Agency, or within the military service's system command. Packaging data retrieval is available from the managing Military Department's or Defense Agency's automated packaging files, CD-ROM products, or by contacting the responsible packaging activity.

6. NOTES

(This section contains information of a general or explanatory nature which may be helpful, but is not mandatory.)

6.1 Intended use. Microcircuits conforming to this specification are intended for logistic support of existing equipment.

6.2 Acquisition requirements. Acquisition documents should specify the following:

a. Title, number, and date of the specification.

b. PIN and compliance identifier, if applicable (see 1.2).

c. Requirements for delivery of one copy of the conformance inspection data pertinent to the device inspection lot to be supplied with each shipment by the device manufacturer, if applicable.

d. Requirements for certificate of compliance, if applicable.

e. Requirements for notification of change of product or process to contracting activity in addition to notification to the qualifying activity, if applicable.

f. Requirements for failure analysis (including required test condition of method 5003 of MIL-STD-883), corrective action, and reporting of results, if applicable.

g. Requirements for product assurance options.

h. Requirements for special lead lengths, or lead forming, if applicable. Unless otherwise specified, these requirements will not apply to direct purchase by or direct shipment to the Government.

i. Requirement for programming the device, including processing option.

j. Requirements for "JAN" marking.

k. Packaging Requirements (see 5.1)

6.3 Qualification. With respect to products requiring qualification, awards will be made only for products which are, at the time of award of contract, qualified for inclusion in Qualified Manufacturers List (QML-38535) whether or not such products have actually been so listed by that date. The attention of the contractors is called to these requirements, and manufacturers are urged to arrange to have the products that they propose to offer to the Federal Government tested for qualification in order that they may be eligible to be awarded contracts or orders for the products covered by this specification. Information pertaining to qualification of products may be obtained from DLA Land and Maritime, ATTN: VQC, P.O. Box 3990, Columbus, OH 43218-3990 or email vqc.chief@dla.mil. An online listing of manufacturers qualified to this specification may be found in the Qualified Products Database (QPD) at http://qpldocs.dla.mil/.

6.4 Superseding information. The requirements of MIL-M-38510 have been superseded to take advantage of the available Qualified Manufacturer Listing (QML) system provided by MIL-PRF-38535. Previous references to MIL-M-38510 in this document have been replaced by appropriate references to MIL-PRF-38535. All technical requirements now consist of this specification and MIL-PRF-38535. The MIL-M-38510 specification sheet number and PIN have been retained to avoid adversely impacting existing government logistics systems and contractor's parts lists.

6.5 Abbreviations, symbols, and definitions. The abbreviations, symbols, and definitions used herein are defined in MIL-PRF-38535, MIL-HDBK-1331, and as follows:

GND ..... Electrical ground (common terminal).
I_{IN} ..... Current flowing into an input terminal.
V_{IC} ..... Input clamp voltage.
V_{IN} ..... Voltage level at an input terminal.

6.6 Logistic support. Lead materials and finishes (see 3.4) are interchangeable. Unless otherwise specified, microcircuits acquired for Government logistic support will be acquired to device class B (see 1.2.2), lead material and finish A (see 3.4). Longer length leads and lead forming should not affect the part number. It is intended that spare devices for logistic support be acquired in the unprogrammed condition (see 3.8.1) and programmed by the maintenance activity, except where use quantities for devices with a specific program or pattern justify stocking of preprogrammed devices.

6.7 Substitutability. The cross-reference information below is presented for the convenience of users. Microcircuits covered by this specification will functionally replace the listed generic-industry type. Generic-industry microcircuit types may not have equivalent operational performance characteristics across military temperature ranges or reliability factors equivalent to MIL-M-38510 device types and may have slight physical variations in relation to case size. The presence of this information should not be deemed as permitting substitution of generic-industry types for MIL-M-38510 types or as a waiver of any of the provisions of MIL-PRF-38535.

Military device type	Generic-industry type	Circuit designator	Fusible links
01 1/	7684 / Harris Semiconductor / CAGE 34371	A	NiCr
01	77S184 / National Semiconductor / CAGE 27014	G	TiW
01 1/	82S184 / Signetics Corporation / CAGE 18324	C	NiCr
02 1/	7685 / Harris Semiconductor / CAGE 34371	A	NiCr
02	77S185 / National Semiconductor / CAGE 27014	G	TiW / W
02, 10	82S185A / Signetics Corporation / CAGE 18324	C	NiCr
02, 08	29651 / Raytheon Company / CAGE 07933	F	NiCr
02	82S185 / e2v aerospace & defense / CAGE 0C7V7	H	ZVE 2/
03	77S180 / National Semiconductor / CAGE 27014	G	TiW
03 1/	7680 / Harris Semiconductor / CAGE 34371	A	NiCr
03 1/	82S180 / Signetics Corporation / CAGE 18324	C	NiCr
03	93Z450 / Fairchild Corporation / CAGE 07263	D	ZVE 2/
03	27S180 / Advanced Micro Devices, Inc. / CAGE 34335	E	Platinum silicide

See footnote at end of table.

Military device type	Generic-industry type	Circuit designator	Fusible links
04	77S181 / National Semiconductor / CAGE 27014	G	TiW / W
04	82S181 / e2v aerospace & defense / CAGE 0C7V7	H	ZVE 2/
04 1/	7681 / Harris Semiconductor / CAGE 34371	A	NiCr
04, 09	82S181A / Signetics Corporation / CAGE 18324	C	NiCr
04, 09	93Z451 / Fairchild Corporation / CAGE 07263	D	ZVE 2/
04	27S181 / Advanced Micro Devices, Inc. / CAGE 34335	E	Platinum silicide
04	29631 / Raytheon Company / CAGE 07933	F	NiCr
05	82S2708 / Signetics Corporation / CAGE 18324	C	NiCr
05	93Z461 / Fairchild Corporation / CAGE 07263	D	ZVE 2/
06	93Z460 / Fairchild Corporation / CAGE 07263	D	ZVE 2/
02, 08	53S841 / Monolithic Memories, Inc. / CAGE 56364	B	TiW

1/ These generic industry types are no longer manufactured.
2/ Zapped vertical emitter.

6.8 Change from previous issue. Marginal notations are not used in this revision to identify changes with respect to the previous issue, due to the extensiveness of the changes.

Custodians:
Army - CR
Navy - EC
Air Force - 85
DLA - CC

Preparing activity:
DLA - CC

Review activities:
Army – SM, MI
Navy - AS, CG, MC, SH
Air Force – 03, 19, 99

(Project 5962-2014-002)

NOTE: The activities listed above were interested in this document as of the date of this document. Since organization and responsibilities can change, you should verify the currency of the information above using the ASSIST Online database at https://assist.dla.mil.