INCH-POUND

MIL-M-38510/13G
3 June 2005
SUPERSEDING
MIL-M-38510/13F
16 April 1982

MILITARY SPECIFICATION

MICROCIRCUITS, DIGITAL, BIPOLAR, TTL, COUNTERS MONOLITHIC SILICON

Inactive for new design after 7 September 1995.

This specification is approved for use by all Departments and Agencies of the Department of Defense.

The requirements for acquiring the product herein shall consist of this specification sheet and MIL-PRF 38535

1. SCOPE

1.1 Scope. This specification covers the detail requirements for monolithic silicon, TTL, binary and decade counters. Two product assurance classes and a choice of case outlines and lead finishes are provided for each type and are reflected in the complete part number. For this product, the requirements of MIL-M-38510 have been superseded by MIL-PRF-38535, (see 6.4).

1.2 Part or Identifying Number (PIN). The PIN is in accordance with MIL-PRF-38535.

1.2.1 Device types. The device types are as follows:

Device type	Circuit
01	Divide-by-12 Counter
02	4-Bit Binary Counter
03	Synchronous 4-Bit Decade Counter (Asynchronous Clear)
04	Synchronous 4-Bit Binary Counter (Synchronous Clear)
05	Synchronous 4-Bit Decade Counter (Synchronous Clear)
06	Synchronous 4-Bit Binary Counter (Asynchronous Clear)
07	High-Speed Decade Counter
08	Synchronous 4-Bit Up/Down Decade Counter
09	Synchronous 4-Bit Up/Down Binary Counter

1.2.2 Device class. The device class is the product assurance level as defined in MIL-PRF-38535.

1.2.3 Case outlines. The case outlines are as designated in MIL-STD-1835 and as follows:

Outline letter	Descriptive designator	Terminals	Package style
A	GDFP5-F14 or CDFP6-F14	14	Flat pack
B	GDFP4-F14	14	Flat pack
C	GDIP1-T14 or CDIP2-T14	14	Dual-in-line
D	GDFP1-F14 or CDFP2-F14	14	Flat pack
E	GDIP1-T16 or CDIP2-T16	16	Dual-in-line
F	GDFP2-F16 or CDFP3-F16	16	Flat pack

Comments, suggestions, or questions on this document should be addressed to: Commander, Defense Supply Center Columbus, ATTN: DSCC-VAS, P. O. Box 3990, Columbus, OH 43218-3990, or emailed to bipolar@dscc.dla.mil. Since contact information can change, you may want to verify the currency of this address information using the ASSIST Online database at http://assist.daps.dla.mil.

1.3 Absolute maximum ratings.

Supply voltage range ..... -0.5 V dc to +7.0 V dc
Input voltage range ..... -1.5 V dc at -12 mA to +5.5 V dc
Storage temperature range ..... -65° to +150°C
Maximum power dissipation (P_D): 1/
Device types 01, 02, 07 ..... 268 mW
Device types 03 through 06 ..... 500 mW
Device types 08 and 09 ..... 490 mW
Thermal resistance, junction to case (θ_{JC}):
Cases A, B, C, D, E and F ..... (See MIL-STD-1835)
Junction temperature (T_J) 2/ ..... 175°C

1.4 Recommended operating conditions.

Supply voltage (V_{CC}) ..... 4.5 V dc minimum to 5.5 V dc maximum
Minimum high level input voltage (V_{IH}) ..... 2.0 V dc
Maximum low level input voltage (V_{IL}) ..... 0.8 V dc
Normalized fanout (each output)
Device types 01, 02, 07, 08, 09 ..... 10 maximum
Device types 03, 04, 05, 06
Low level ..... 10 maximum
High level ..... 20 maximum
Width of input count pulse, $t_{P(IN)}$
Device types 01, 02, 07 ..... 50 ns minimum
Device types 08, 09 ..... 25 ns minimum
Width of reset pulse, $t_{P(RESET)}$
Device types 01, 02, 07 ..... 50 ns minimum
Input clock frequency, f_{CLOCK}
Device types 01, 02, 07 ..... 0 to 10 MHz
Device types 03, 04, 05, 06, 08, 09 ..... 0 to 20 MHz
Width of clock pulse, $t_{W(CLOCK)}$
Device types 03, 04, 05, 06 ..... 25 ns minimum
Width of clear pulse, $t_{W(CLEAR)}$
Device types 03, 04, 05, 06, 08, 09 ..... 25 ns minimum
Setup time, $t_{(SETUP)}$,
Device types 03, 04, 05, 06
Data inputs ..... 20 ns minimum
Load ..... 30 ns minimum
Clear (04 and 05 only) ..... 25 ns minimum
Setup time, $t_{(SETUP)}$,
Device types 08, 09
Data inputs ..... 25 ns minimum
Hold time at any input, t_{HOLD}
Device types 03, 04, 05, 06, 08, 09 ..... 0 ns minimum
Enable time, $t_{(ENABLE)}$, device types 03, 04, 05, 06
Enable P ..... 25 ns minimum
Case operating temperature range (T_C) ..... -55° to +125°C

1/ Must withstand the added P_D due to short-circuit test (e.g., I_{OS}).
2/ Maximum junction temperature should not be exceeded except in accordance with allowable short duration burn-in screening condition in accordance with MIL-PRF-38535.

2. APPLICABLE DOCUMENTS

2.1 General. The documents listed in this section are specified in sections 3, 4, or 5 of this specification. This section does not include documents cited in other sections of this specification or recommended for additional information or as examples. While every effort has been made to ensure the completeness of this list, document users are cautioned that they must meet all specified requirements of documents cited in sections 3, 4, or 5 of this specification, whether or not they are listed.

2.2 Government documents.

2.2.1 Specifications and standards. The following specifications and standards form a part of this specification to the extent specified herein. Unless otherwise specified, the issues of these documents are those cited in the solicitation or contract.

DEPARTMENT OF DEFENSE SPECIFICATIONS

MIL-PRF-38535 - Integrated Circuits (Microcircuits) Manufacturing, General Specification for.

DEPARTMENT OF DEFENSE STANDARDS

MIL-STD-883 - Test Method Standard for Microelectronics.
MIL-STD-1835 - Interface Standard Electronic Component Case Outlines

(Copies of these documents are available online at http://assist.daps.dla.mil/quicksearch/ or http://assist.daps.dla.mil or from the Standardization Document Order Desk, 700 Robbins Avenue, Building 4D, Philadelphia, PA 19111-5094.)

2.3 Order of precedence. In the event of a conflict between the text of this specification and the references cited herein, the text of this document takes precedence. Nothing in this document, however, supersedes applicable laws and regulations unless a specific exemption has been obtained.

3. REQUIREMENTS

3.1 Qualification. Microcircuits furnished under this specification shall be products that are manufactured by a manufacturer authorized by the qualifying activity for listing on the applicable qualified manufacturers list before contract award (see 4.3 and 6.3).

3.2 Item requirements. The individual item requirements shall be in accordance with MIL-PRF-38535 and as specified herein or as modified in the device manufacturer's Quality Management (QM) plan. The modification in the QM plan shall not affect the form, fit, or function as described herein.

3.3 Design, construction, and physical dimensions. The design, construction, and physical dimensions shall be as specified in MIL-PRF-38535 and herein.

3.3.1 Case outlines. The case outlines shall be as specified in 1.2.3.

3.3.2 Logic diagrams and terminal connections. The logic diagrams and terminal connections shall be as specified on figures 1 and 2 respectively.

3.3.3 Truth tables and timing diagrams. The truth tables and timing diagrams shall be as specified on figures 3 and 4 respectively.

3.3.4 Schematic circuits. The schematic circuits shall be maintained by the manufacturer and made available to the qualifying activity and the preparing activity upon request.

3.4 Lead material and finish. The lead material and finish shall be in accordance with MIL-PRF-38535 (see 6.6).

3.5 Electrical performance characteristics. The electrical performance characteristics are as specified in table I, and apply over the full recommended case operating temperature range, unless otherwise specified.

3.6 Electrical test requirements. The electrical test requirements for each device class shall be the subgroups specified in table II. The electrical tests for each subgroup are described in table III.

3.7 Marking. Marking shall be in accordance with MIL-PRF-38535.

3.8 Microcircuit group assignment. The devices covered by this specification shall be in microcircuit group number 5 (see MIL-PRF-38535, appendix A).

4. VERIFICATION

4.1 Sampling and inspection. Sampling and inspection procedures shall be in accordance with MIL-PRF-38535 or as modified in the device manufacturer's Quality Management (QM) plan. The modification in the QM plan shall not effect the form, fit, or function as described herein.

4.2 Screening. Screening shall be in accordance with MIL-PRF-38535 and shall be conducted on all devices prior to qualification and conformance inspection. The following additional criteria shall apply:

a. The burn-in test duration, test condition, and test temperature, or approved alternatives shall be as specified in the device manufacturer's QM plan in accordance with MIL-PRF-38535. The burn-in test circuit shall be maintained under document control by the device manufacturer's Technology Review Board (TRB) in accordance with MIL-PRF-38535 and shall be made available to the acquiring or preparing activity upon request. The test circuit shall specify the inputs, outputs, biases, and power dissipation, as applicable, in accordance with the intent specified in test method 1015 of MIL-STD-883.

b. Interim and final electrical test parameters shall be as specified in table II, except interim electrical parameters test prior to burn-in is optional at the discretion of the manufacturer.

c. Additional screening for space level product shall be as specified in MIL-PRF-38535.

4.3 Qualification inspection. Qualification inspection shall be in accordance with MIL-PRF-38535.

4.4 Technology Conformance Inspection (TCI). Technology conformance inspection shall be in accordance with MIL-PRF-38535 and herein for groups A, B, C, and D inspections (see 4.4.1 through 4.4.4).

4.4.1 Group A inspection. Group A inspection shall be in accordance with table III of MIL-PRF-38535 and as follows:

a. Tests shall be as specified in table II herein.

b. Subgroups 4, 5, and 6 shall be omitted.

TABLE I. Electrical performance characteristics.

Test	Symbol	Conditions $-55°C \le T_C \le +125°C$ unless otherwise specified		Device Type	Limits Min	Limits Max	Unit
High-level output voltage	V_{OH}	V_{CC} = 4.5 V, V_{IN} = 0.8 V I_{OH} = -400 µA		01, 02, 07 08, 09	2.4		V
High-level output voltage	V_{OH}	V_{CC} = 4.5 V, V_{IN} = 0.8 V I_{OH} = -800 µA		03, 04 05, 06	2.4		V
Low-level output voltage	V_{OL}	V_{CC} = 4.5 V, I_{OL} = 16 mA	V_{IN} = 2.0 V	01, 02, 03 04, 05, 06 07		0.4	V
			V_{IN} = 0.8 V	08, 09		0.4	V
Input clamp voltage	V_{IC}	V_{CC} = 4.5 V, I_{IN} = -12 mA T_C = 25°C		01, 02, 03 04, 05, 06 07, 08, 09		-1.5	V
High-level input current at reset inputs	I_{IH1}	V_{CC} = 5.5 V, V_{IN} = 2.4 V		01, 02, 07		40	µA
High-level input current at reset inputs	I_{IH2}	V_{CC} = 5.5 V, V_{IN} = 5.5 V		01, 02, 07		100	µA
High-level input current at input A	I_{IH3}	V_{CC} = 5.5 V, V_{IN} = 2.4 V		01, 07		80	µA
High-level input current at input A	I_{IH4}	V_{CC} = 5.5 V, V_{IN} = 5.5 V		01, 07		200	µA
High-level input current at input BC or BD	I_{IH5}	V_{CC} = 5.5 V, V_{IN} = 2.4 V		01, 07		160	µA
High-level input current at input BC or BD	I_{IH6}	V_{CC} = 5.5 V, V_{IN} = 5.5 V		01, 07		400	µA
High-level input current at input A or B	I_{IH7}	V_{CC} = 5.5 V, V_{IN} = 2.4 V		02		80	µA
High-level input current at input A or B	I_{IH8}	V_{CC} = 5.5 V, V_{IN} = 5.5 V		02		200	µA
High-level input current at clock or enable T	I_{IH9}	V_{CC} = 5.5 V, V_{IN} = 2.4 V		03, 04 05, 06		80	µA
High-level input current at clock or enable T	I_{IH10}	V_{CC} = 5.5 V, V_{IN} = 5.5 V		03, 04, 05, 06		200	µA
High-level input current at other inputs	I_{IH11}	V_{CC} = 5.5 V, V_{IN} = 2.4 V		03, 04, 05, 06, 08, 09		40	µA
High-level input current at other inputs	I_{IH12}	V_{CC} = 5.5 V, V_{IN} = 5.5 V		03, 04, 05, 06, 08, 09		100	µA
Low-level input current at reset inputs	I_{IL1}	V_{CC} = 5.5 V, V_{IN} = 0.4 V		01, 02, 07	-0.4	-1.6	mA
Low-level input current at input A	I_{IL2}	V_{CC} = 5.5 V, V_{IN} = 0.4 V		01	-0.4	-3.2	mA
				08, 09	-0.5	-1.6	mA
Low-level input current at input BC or BD	I_{IL3}	V_{CC} = 5.5 V, V_{IN} = 0.4 V		01	-0.4	-6.4	mA
				07	-1.4	-6.4	mA
Low-level input current at input A or E	I_{IL4}	V_{CC} = 5.5 V, V_{IN} = 0.4 V		02	-0.4	-3.2	mA
Low-level input current at clock, count up or count down	I_{IL5}	V_{CC} = 5.5 V, V_{IN} = 0.4 V		03, 04 05, 06	-1.0	-2.3	mA
				08, 09	-0.5	-1.6	mA

See footnotes at end of table.

TABLE I. Electrical performance characteristics – Continued.

Test	Symbol	Conditions $-55°C \le T_C \le +125°C$ unless otherwise specified	Device type	Limits		Unit
				Min	Max	
Low-level input current at data inputs	I_{IL6}	V_{CC} = 5.5 V, V_{IN} = 0.4 V	03, 04, 05, 06	-0.4	-1.3	mA
			08, 09	-0.5	-1.6	mA
Low-level input current at clear, enable, and load	I_{IL7}	V_{CC} = 5.5 V, V_{IN} = 0.4 V	03, 04, 05 06, 08, 09	-0.5	-1.6	mA
Low-level input current at count enable T	I_{IL8}	V_{CC} = 5.5 V, V_{IN} = 0.4 V	03, 04, 05 06	-1.0	-3.2	mA
Short-circuit supply current	I_{OS}	V_{CC} = 5.5 V 1/	01, 02, 03 04, 05, 06 07	-20	-57	mA
			08, 09	-20	-65	mA
Supply current	I_{CC}	V_{CC} = 5.5 V, V_{IN} = 4.5 V	01, 02, 07		44	mA
			08, 09		89	mA
High-level supply current	I_{CCH}	V_{CC} = 5.5 V 2/	03, 04, 05, 06		85	mA
Low-level supply current	I_{CCL}	V_{CC} = 5.5 V 3/	03, 04 05, 06		91	mA
Maximum frequency of input count pulses	F_{MAX}	V_{CC} = 5.0 V C_L = 50 pF ±10% R_L = 390Ω ±5%	01, 02, 07	10		MHz
Maximum input clock frequency	F_{MAX}		03, 04, 05, 06, 08, 09	20		MHz
Propagation delay time to logical H level from input count pulse to output D	t_{PLH1}		01, 07	20	115	ns
Propagation delay time to logical L level from input count pulse to output D	t_{PHL1}		01, 07	20	115	ns
Propagation delay time to logical H level from input count pulse to output D	t_{PLH2}		02	20	135	ns
Propagation delay time to logical L level from input count pulse to output D	t_{PHL2}		02	20	135	ns
Propagation delay time, low-to-high-level carry output from clock	t_{PLH3}		03, 04 05, 06	3	58	ns
Propagation delay time, high-to-low-level carry output from clock	t_{PHL3}		03, 04 05, 06	3	58	ns
Propagation delay time, low-to-high-level Q output from clock	t_{PLH4}		03, 04 05, 06	3	36	ns
Propagation delay time, high-to-low-level Q output from clock	t_{PHL4}		03, 04 05, 06	3	38	ns

See footnotes at end of table.

TABLE I. Electrical performance characteristics – Continued.

Test	Symbol	Conditions $-55°C \le T_C \le +125°C$ unless otherwise specified	Device type	Limits		Unit
				Min	Max	
Propagation delay time, low-to-high-level carry output from enable T	t_{PLH5}	V_{CC} = 5.0 V C_L = 50 pF ±10% R_L = 390Ω ±5%	03, 04 05, 06	3	27	ns
Propagation delay time, high-to-low-level carry output from enable T	t_{PHL5}		03, 04 05, 06	3	27	ns
Propagation delay time, high-to-low-level Q output from clear	t_{PHL6}		03, 04 05, 06	3	47	ns
Propagation delay time, high-to-low-level Q output from clear	t_{PHL7}		08, 09	3	57	ns
Propagation delay time, low-to-high-level Q output from load input	t_{PLH8}		08, 09	3	66	ns
Propagation delay time, high-to-low-level Q output from load input	t_{PHL8}		08, 09	3	62	ns
Propagation delay time, high-to-low-level carry output from count up input	t_{PHL9}		08, 09	3	39	ns
Propagation delay time, low-to-high-level carry output from count up input	t_{PLH9}		08, 09	3	45	ns
Propagation delay time, high-to-low-level borrow output from count down input	t_{PHL10}		08, 09	3	39	ns
Propagation delay time, low-to-high-level borrow output from count down input	t_{PLH10}		08, 09	3	42	ns
Propagation delay time, low-to-high-level, Q output from count up or count down input	t_{PHL11}		08, 09	3	63	ns
Propagation delay time, high-to-low-level, Q output from count up or count down input	t_{PLH11}		08, 09	3	71	ns

1/ Not more than one output should be shorted at a time.

2/ I_{CCH} is measured: (a) With the load input high; and (b) Then again with the load input low with all other inputs high and all outputs open.

3/ I_{CCL} is measured: (a) With the clock input high; and (b) Then again with the clock input low with all other inputs low and all outputs open.

TABLE II. Electrical test requirements.

MIL-PRF-38535 test requirements	Subgroup (see table III)	
	Class S devices	Class B devices
Interim electrical parameters (Pre Burn-In) (Method 5004)	1	1
Final electrical test parameters	1*, 2, 3, 7, 9, 10, 11	1*, 2, 3, 7, 9
Group A test requirements	1, 2, 3, 7, 8, 9, 10, 11	1, 2, 3, 7, 8, 9, 10, 11
Group B electrical test parameters when using the method 5005 QCI option	1, 2, 3, 9, 10, 11	N/A
Group C end-point electrical parameters	1, 2, 3, 9, 10, 11	1, 2, 3
Group D end-point electrical parameters	1, 2, 3	1, 2, 3

*PDA applies to subgroup 1.

4.4.2 Group B inspection. Group B inspection shall be in accordance with table II of MIL-PRF-38535.

4.4.3 Group C inspection. Group C inspection shall be in accordance with table IV of MIL-PRF-38535 and as follows:

a. End-point electrical parameters shall be as specified in table II herein.

b. The steady-state life test duration, test condition, and test temperature, or approved alternatives shall be as specified in the device manufacturer's QM plan in accordance with MIL-PRF-38535. The burn-in test circuit shall be maintained under document control by the device manufacturer's Technology Review Board (TRB) in accordance with MIL-PRF-38535 and shall be made available to the acquiring or preparing activity upon request. The test circuit shall specify the inputs, outputs, biases, and power dissipation, as applicable, in accordance with the intent specified in test method 1005 of MIL-STD-883.

4.4.4 Group D inspection. Group D inspection shall be in accordance with table V of MIL-PRF-38535. End-point electrical parameters shall be as specified in table II herein.

4.5 Methods of inspection. Methods of inspection shall be as specified and as follows:

4.5.1 Voltage and current. All voltages given are referenced to the microcircuit ground terminal. Currents given are conventional and positive when flowing into the referenced terminal.

Terminal number	Device type 01	Device type 02	Device type 03, 04, 05, 06	Device type 07	Device type 08 and 09
	Cases A, B, C, D	Cases A, B, C, D	Cases E and F	Cases A, B, C, D	Cases E and F
1	IN BC	IN B	CLEAR	IN BD	B
2	NC	$R_0(1)$	CLOCK	$R_0(1)$	Q_B
3	NC	$R_0(2)$	A	$R_0(2)$	Q_A
4	NC	NC	B	NC	CD
5	V_{CC}	V_{CC}	C	V_{CC}	CU
6	$R_0(1)$	NC	D	$R_9(1)$	Q_C
7	$R_0(2)$	NC	ENABLE P	$R_9(2)$	Q_D
8	Q_D	Q_C	GND	Q_C	GND
9	Q_C	Q_B	LOAD	Q_B	D
10	GND	GND	ENABLE T	GND	C
11	Q_B	Q_D	Q_D	Q_D	LOAD
12	Q_A	Q_A	Q_C	Q_A	CARRY
13	NC	NC	Q_B	NC	BORROW
14	IN A	IN A	Q_A	IN A	CLEAR
15			CO		A
16			V_{CC}		V_{CC}

LOGIC: Low input to load sets Q_A = A, Q_B = B, Q_C = C, and Q_D = D

FIGURE 1. Terminal connections.

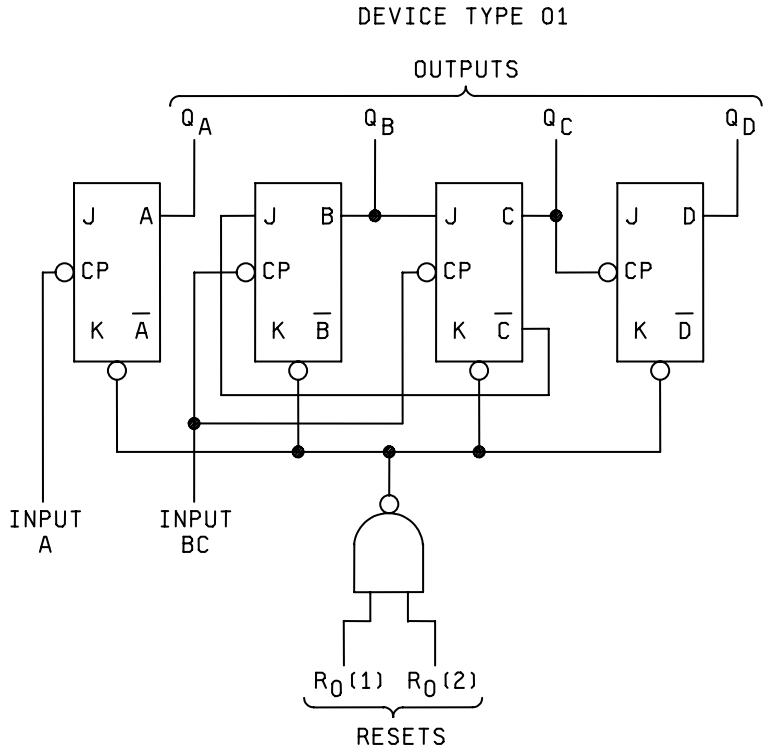

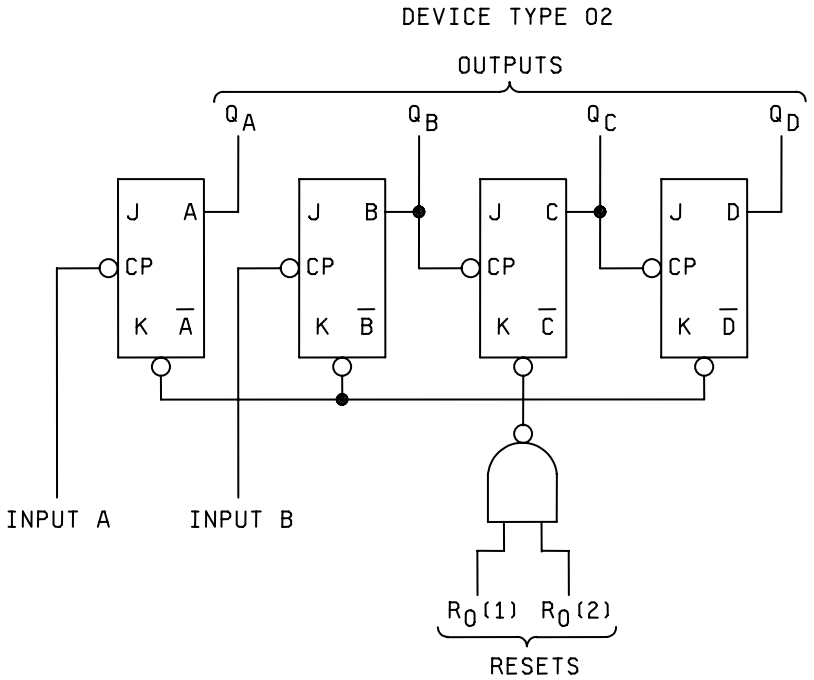

FIGURE 2. Logic diagrams.

DEVICE TYPE 03

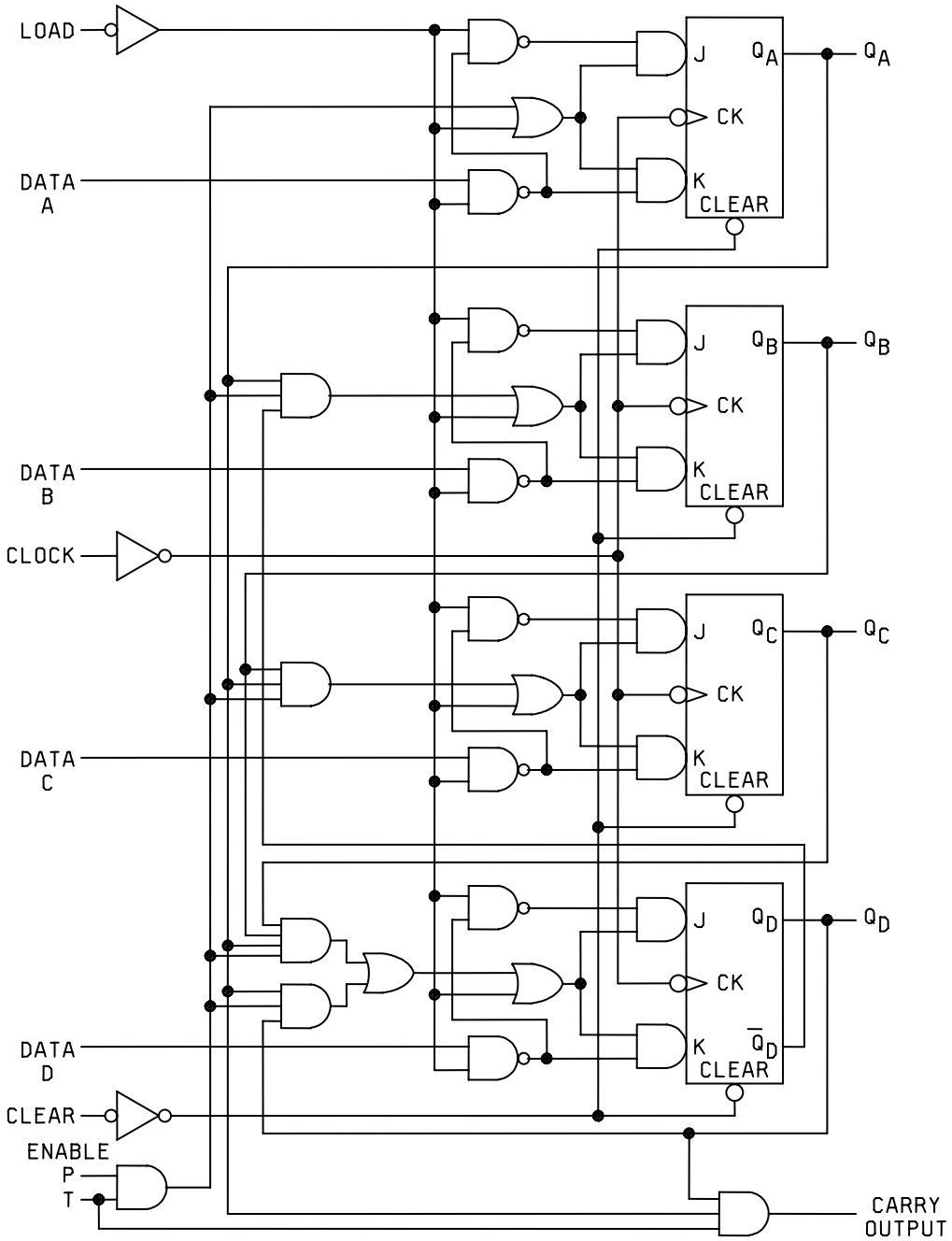

FIGURE 2. Logic diagrams - Continued.

DEVICE TYPE 03

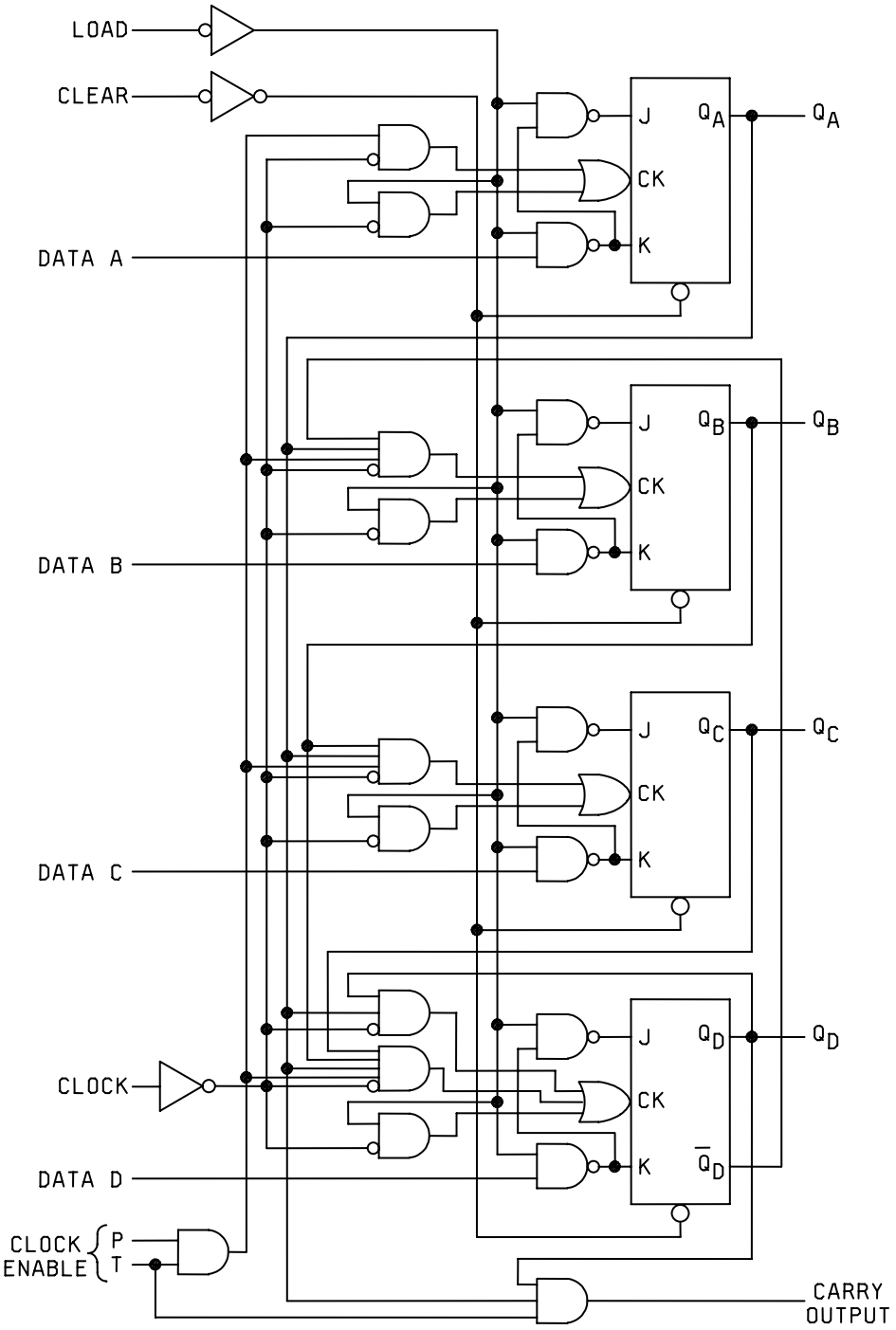

FIGURE 2. Logic diagrams - Continued.

DEVICE TYPE 04

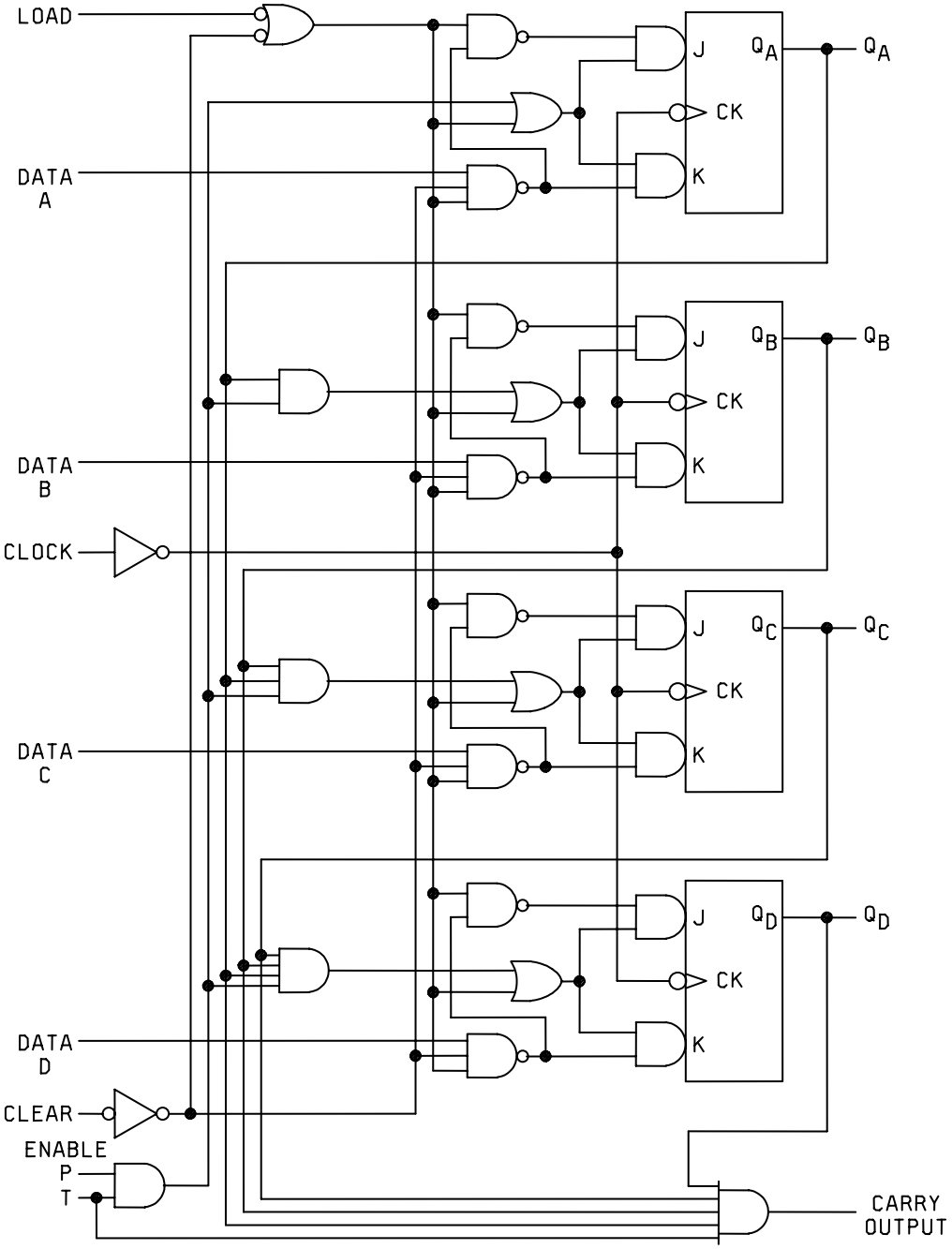

FIGURE 2. Logic diagrams - Continued.

DEVICE TYPE 04

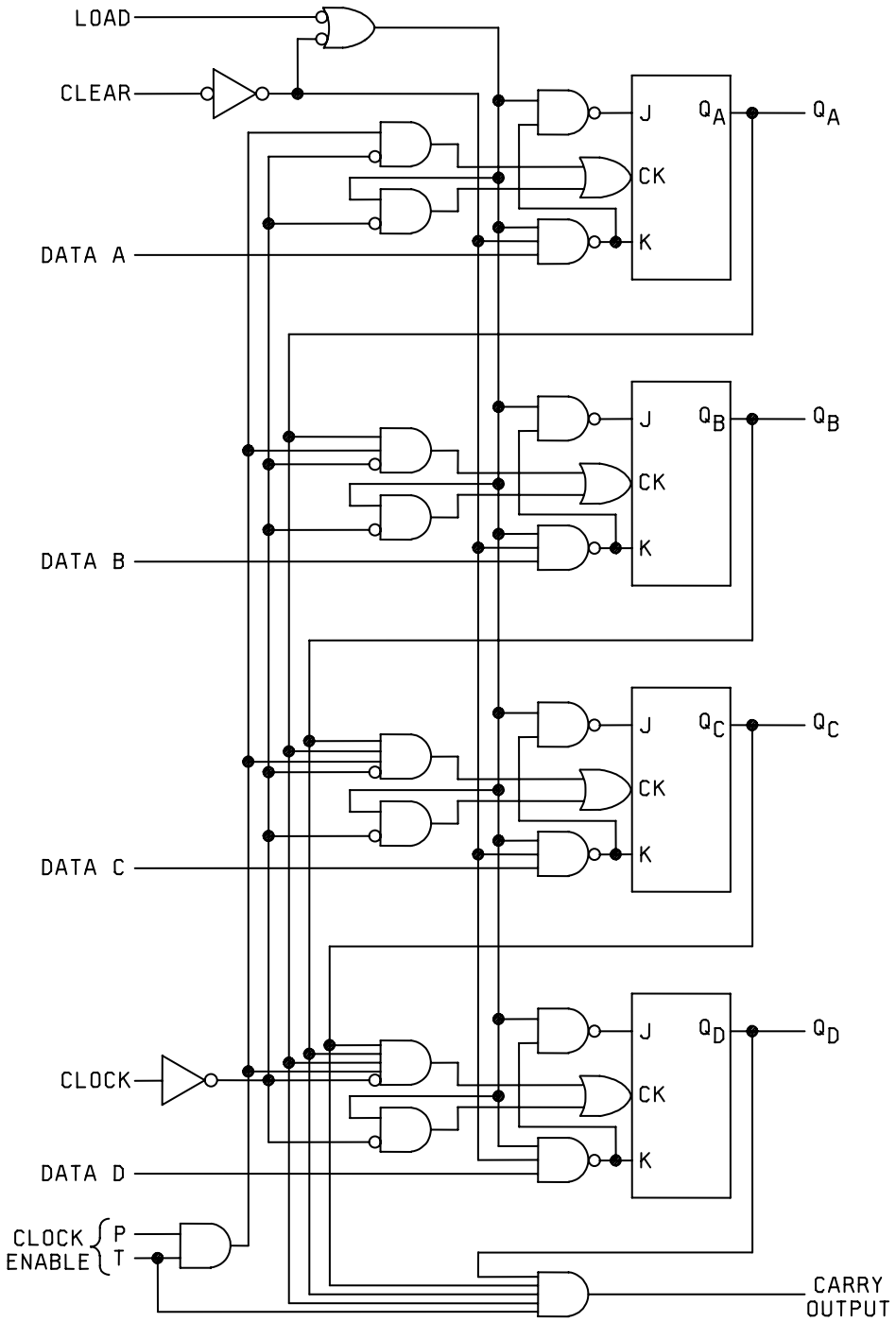

FIGURE 2. Logic diagrams - Continued.

DEVICE TYPE 05

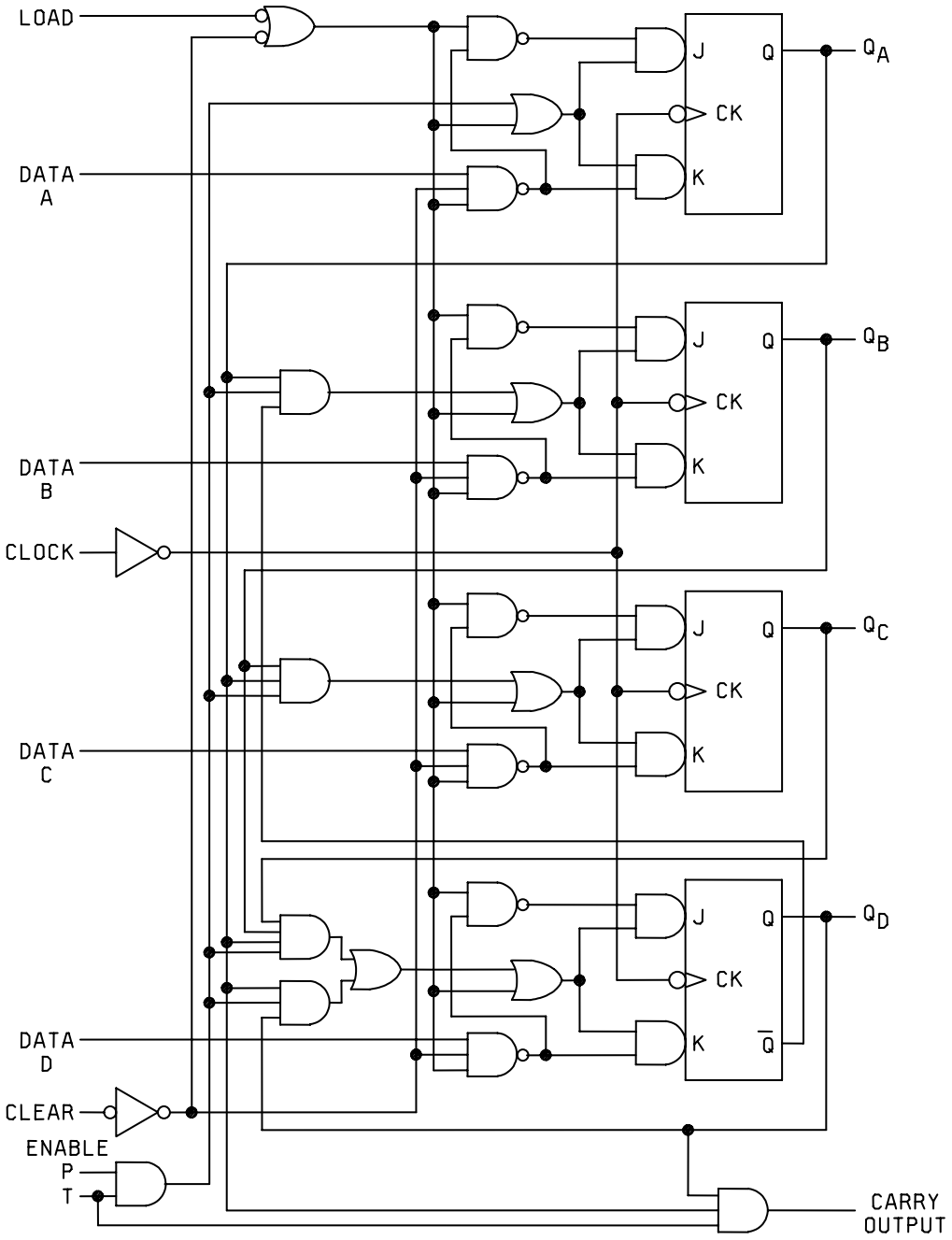

FIGURE 2. Logic diagrams - Continued.

DEVICE TYPE 05

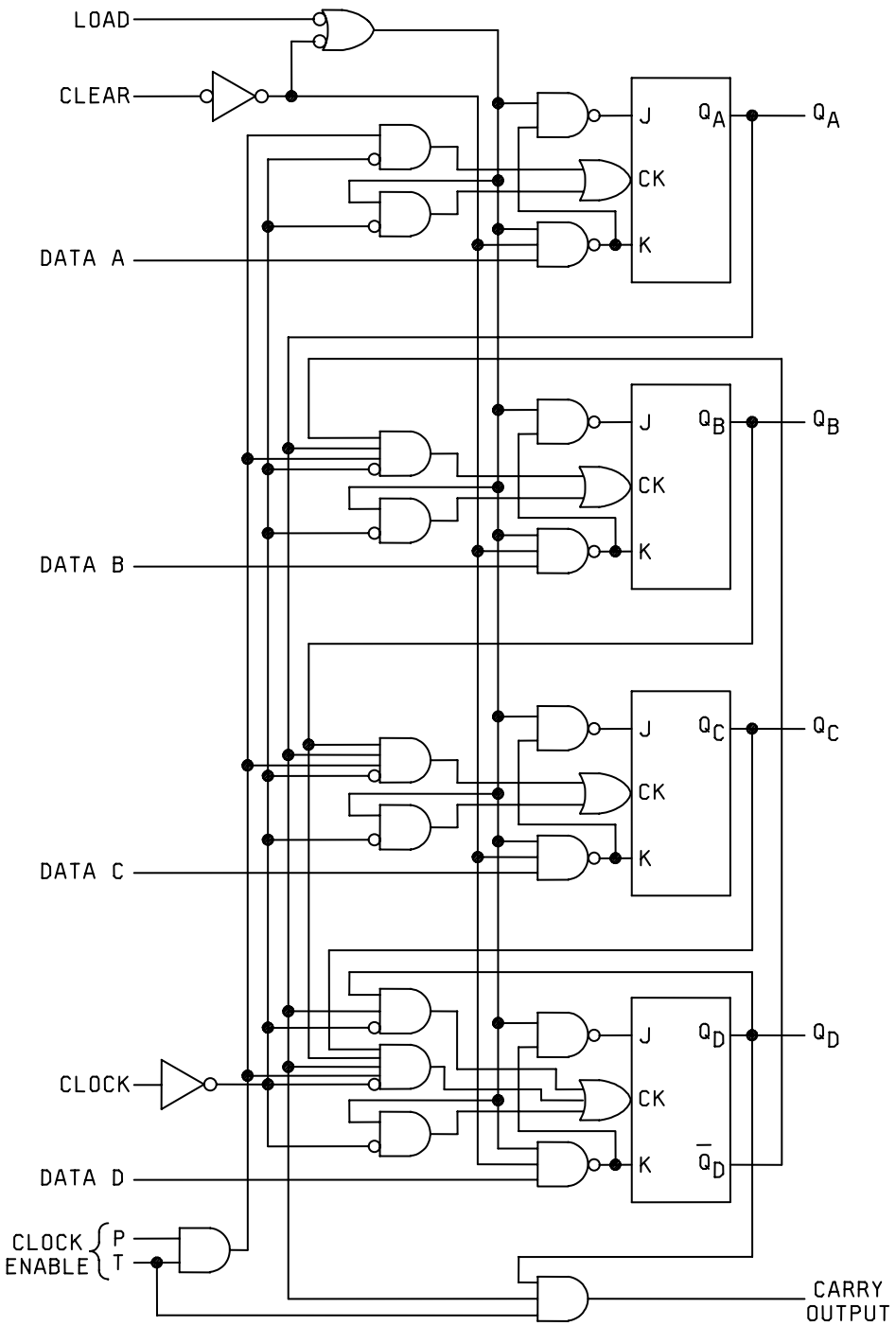

FIGURE 2. Logic diagrams - Continued.

DEVICE TYPE 06

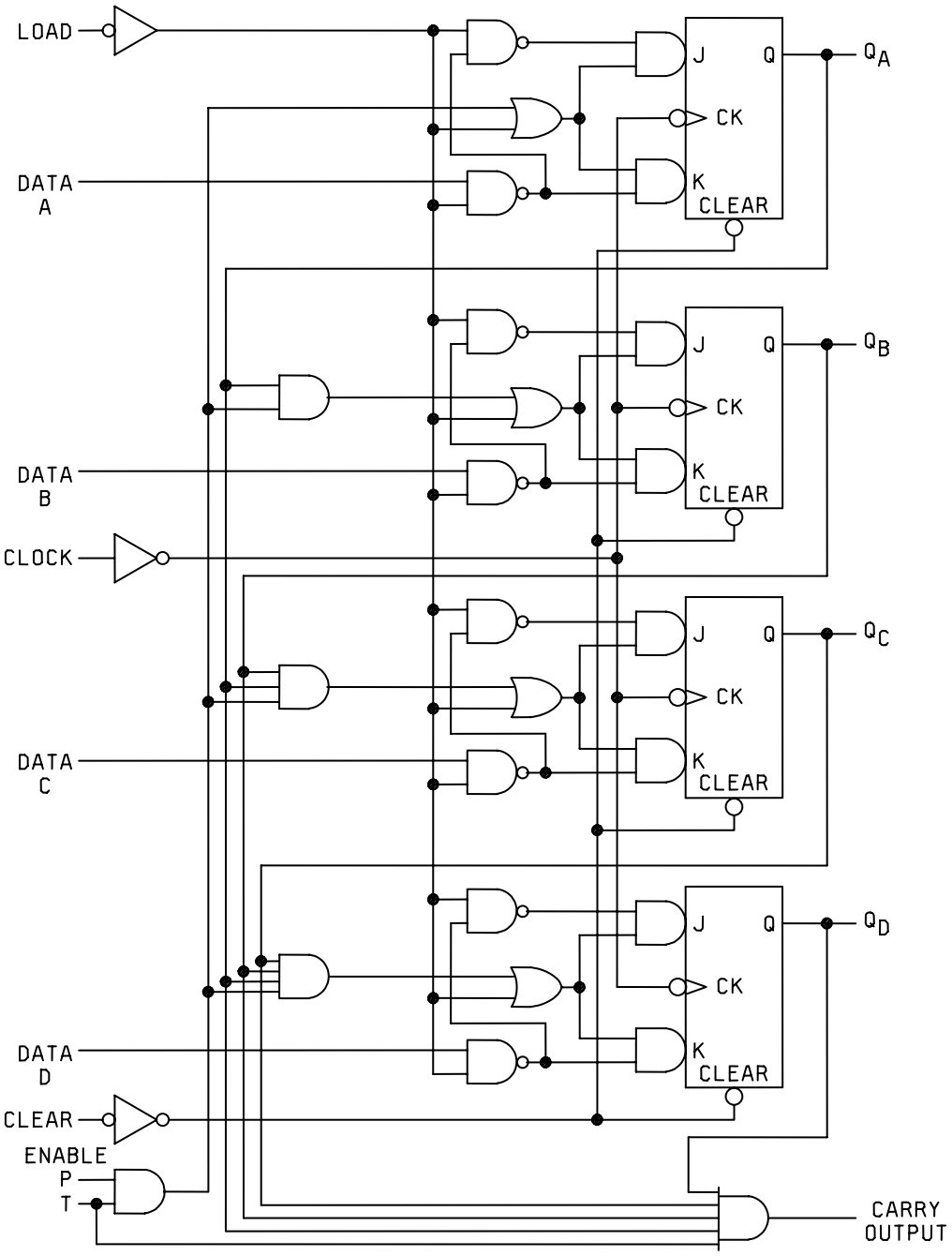

FIGURE 2. Logic diagrams - Continued.

DEVICE TYPE 06

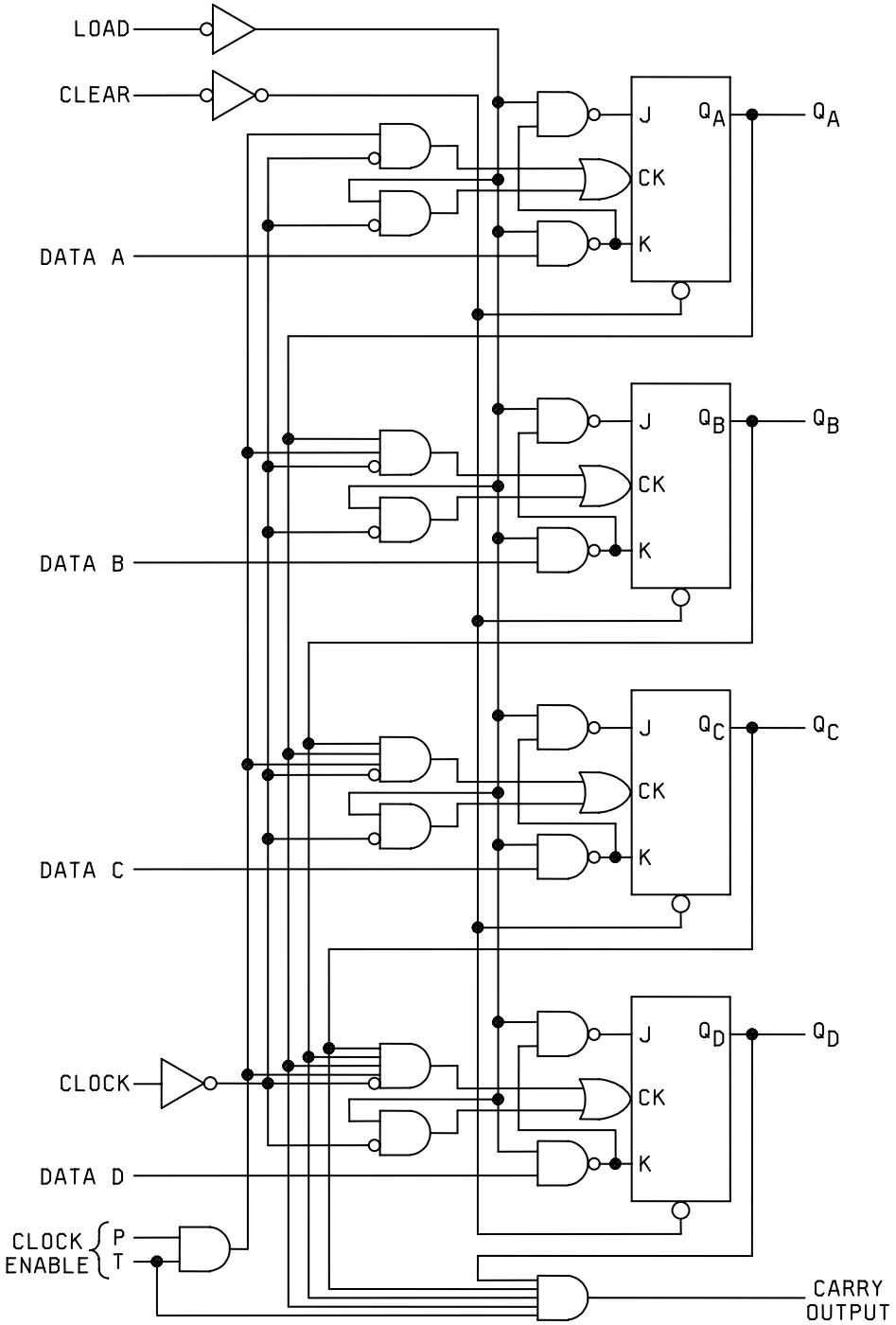

FIGURE 2. Logic diagrams - Continued.

DEVICE TYPE 07

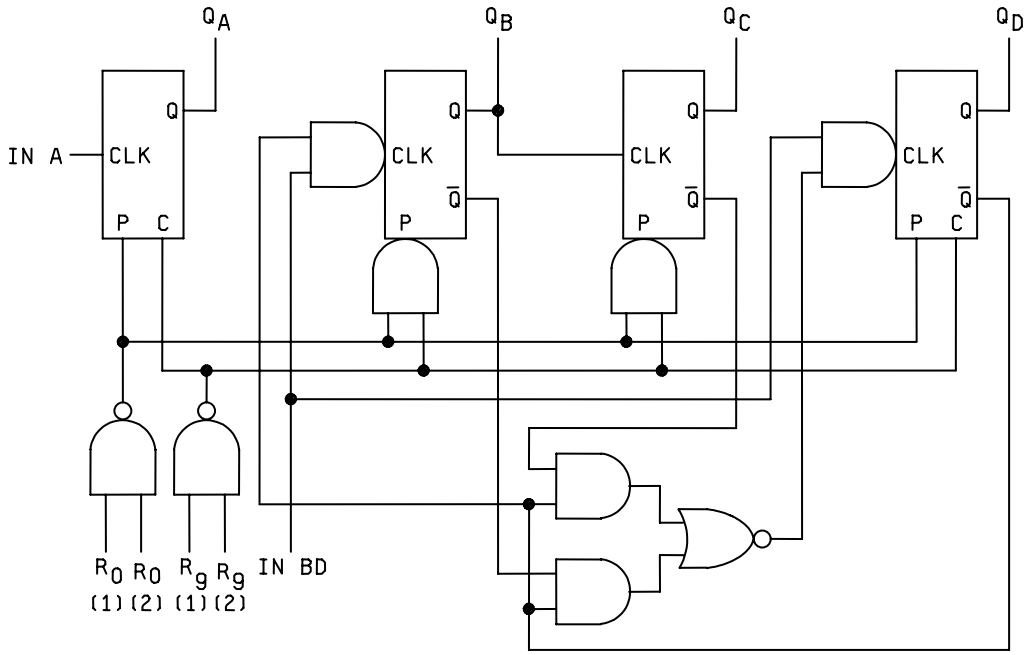

FIGURE 2. Logic diagrams - Continued.

DEVICE TYPE 08

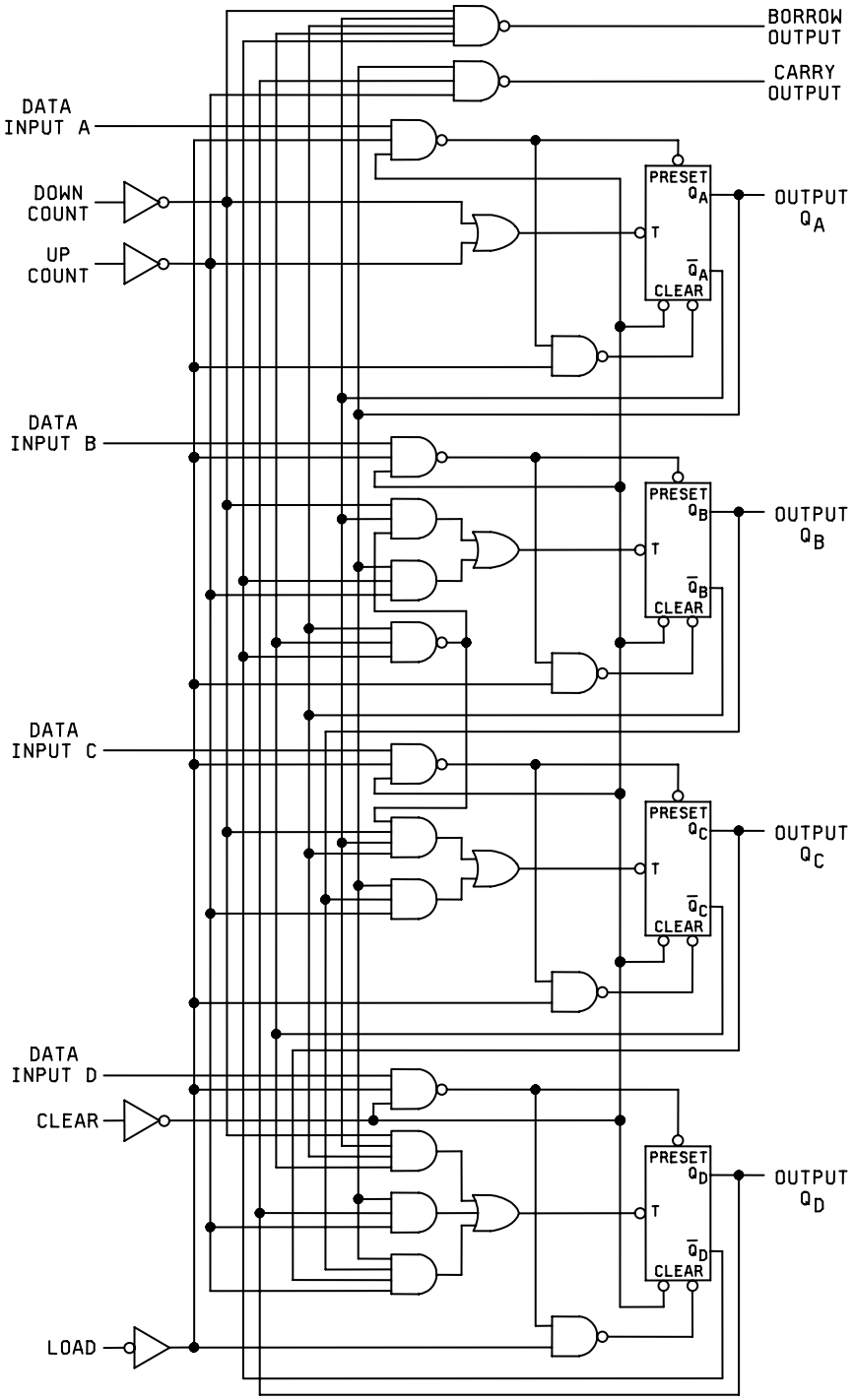

FIGURE 2. Logic diagrams - Continued.

DEVICE TYPE 09

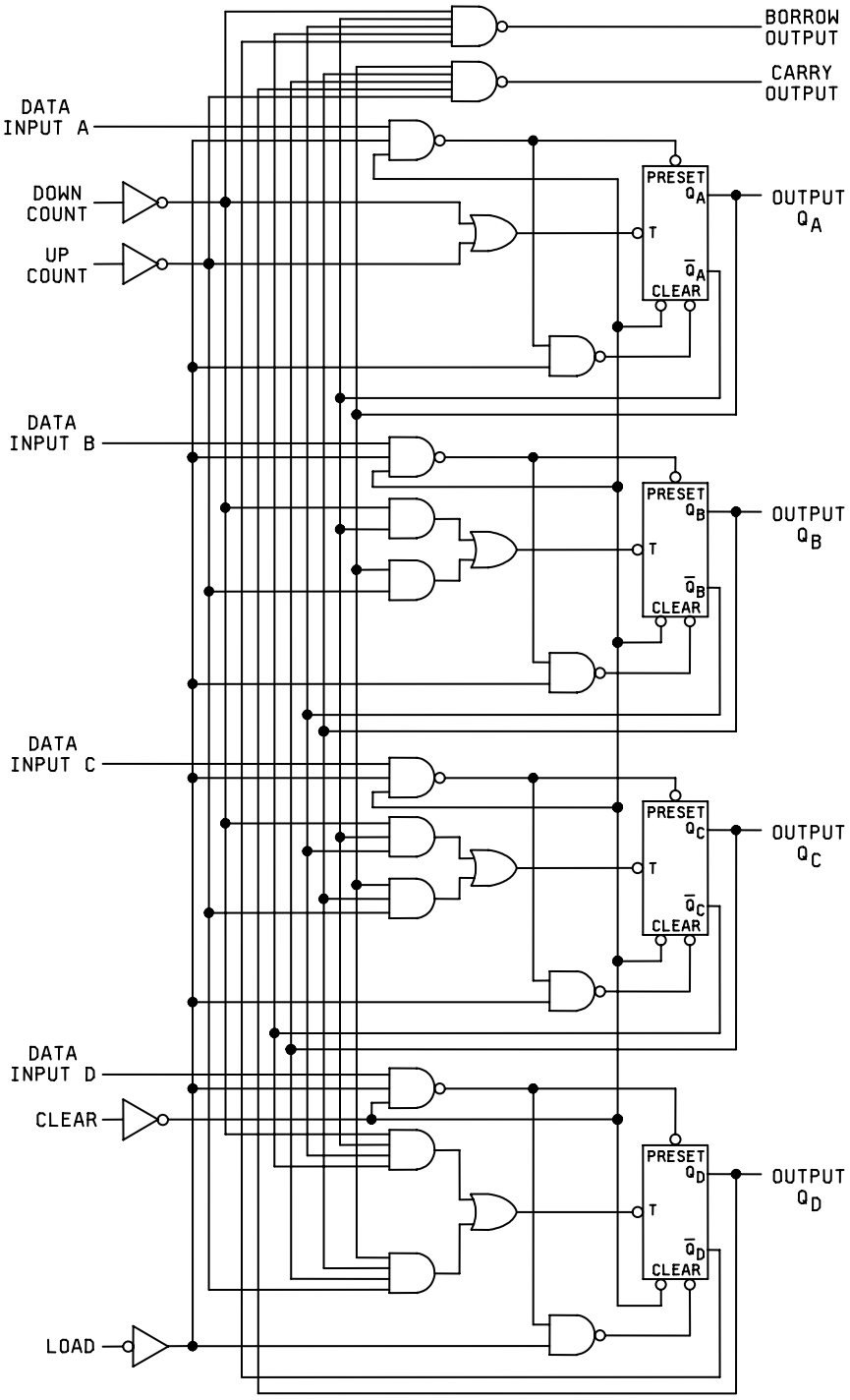

FIGURE 2. Logic diagrams - Continued.

DEVICE TYPE 01

Count	Output			
	D	C	B	A
0	L	L	L	L
1	L	L	L	H
2	L	L	H	L
3	L	L	H	H
4	L	H	L	L
5	L	H	L	H
6	H	L	L	L
7	H	L	L	H
8	H	L	H	L
9	H	L	H	H
10	H	H	L	L
11	H	H	L	H

DEVICE TYPE 02

Count	Output			
	D	C	B	A
0	L	L	L	L
1	L	L	L	H
2	L	L	H	L
3	L	L	H	H
4	L	H	L	L
5	L	H	L	H
6	L	H	H	L
7	L	H	H	H
8	H	L	L	L
9	H	L	L	H
10	H	L	H	L
11	H	L	H	H
12	H	H	L	L
13	H	H	L	H
14	H	H	H	L
15	H	H	H	H

NOTES FOR TYPE 01:

1. Output A connected to input BC.
2. To reset all outputs to logical L, both $R_0(1)$ and $R_0(2)$ inputs must be at logical H.
3. Either (or both) reset inputs $R_0(1)$ and $R_0(2)$ must be at logical L to count.
4. When used as a divide-by-twelve counter, output A must be externally connected to input BC. The input count pulses are applied to input A. Simultaneous divisions of 2, 6, and 12 are performed at the A, C, and D outputs as shown in the truth table above.
5. When used as a divide-by-six counter, the input count pulses are applied to input BC. Simultaneously, frequency divisions of 3 and 6 are available at the C and D outputs. Independent use of flip-flop A is available if the reset function coincides with reset of the divide-by-six counter.

NOTES FOR TYPE 02:

1. Output A connected to input B.
2. To reset all outputs to logical L, both $R_0(1)$ and $R_0(2)$ inputs must be at logical H.
3. Either (or both) reset inputs $R_0(1)$ and $R_0(2)$ must be at logical L to count.
4. When used as a 4-bit ripple-through counter, output A must be externally connected to input B. The input count pulses are applied to input A. Simultaneous divisions of 2, 4, 8, and 16 are performed at the A, B, C, and D outputs as shown in the truth table above.
5. When used as a 3-bit ripple-through counter, the input count pulses are applied to input B. Simultaneous frequency divisions of 2, 4, and 8 are available at the B, C, and D outputs. Independent use of flip-flop A is available if the reset function coincides with reset of the 3-bit ripple-through counter.

FIGURE 3. Truth tables.

SYNCHRONOUS TRUTH TABLE, DEVICE TYPES 03 AND 05

Inputs at time t_n									Outputs at time t_{n+1}				
Clock	Enable P	Enable T	Load	A	B	C	D	Clear	Q_A	Q_B	Q_C	Q_D	Carry output
CP	L	X	H	X	X	X	X	H	NC	NC	NC	NC	NC
CP	X	L	H	X	X	X	X	H	NC	NC	NC	NC	L
CP	H	H	H	X	X	X	X	H	Previous count plus 1 (note 1)				H if count = 9 L if count < 9
CP	X	H	L	X	X	X	X	H	A	B	C	D	H if count = 9 L if count < 9
CP	X	L	L	X	X	X	X	H	A	B	C	D	L

ASYNCHRONOUS TRUTH TABLE, DEVICE TYPE 03

Inputs at time t_n									Outputs at time t_{n+1}				
Clock	Enable P	Enable T	Load	A	B	C	D	Clear	Q_A	Q_B	Q_C	Q_D	Carry output
X	X	X	X	X	X	X	X	L	L	L	L	L	L

NOTES:

1. See UP count sequence table.
2. L = V_{IL} for inputs, V_{OL} for outputs.
3. H = V_{IH} for inputs, V_{OH} for outputs.
4. X = V_{IH} or V_{IL}.
5. CP = clock pulse.
6. NC = no change.

UP Count Sequence Table

Q_A (LSB)	Q_B	Q_C	Q_D (MSB)
L	L	L	L
H	L	L	L
L	H	L	L
H	H	L	L
L	L	H	L
H	L	H	L
L	H	H	L
H	H	H	L
L	L	L	H
H	L	L	H

FIGURE 3. Truth tables - Continued.

SYNCHRONOUS TRUTH TABLE, DEVICE TYPES 04 AND 06

Inputs at time t_n									Outputs at time t_{n+1}				
Clock	Enable P	Enable T	Load	A	B	C	D	Clear	Q_A	Q_B	Q_C	Q_D	Carry output
CP	L	X	H	X	X	X	X	H	NC	NC	NC	NC	NC
CP	X	L	H	X	X	X	X	H	NC	NC	NC	NC	L
CP	H	H	H	X	X	X	X	H	Previous count plus 1 (note 1)				H if count = 15 L if count < 15
CP	X	H	L	X	X	X	X	H	A	B	C	D	H if count = 15 L if count < 15
CP	X	L	L	X	X	X	X	H	A	B	C	D	L

ASYNCHRONOUS TRUTH TABLE, DEVICE TYPE 06

Inputs at time t_n									Outputs at time t_{n+1}				
Clock	Enable P	Enable T	Load	A	B	C	D	Clear	Q_A	Q_B	Q_C	Q_D	Carry output
X	X	X	X	X	X	X	X	L	L	L	L	L	L

NOTES:

1. See UP count sequence table.
2. L = V_{IL} for inputs, V_{OL} for outputs.
3. H = V_{IH} for inputs, V_{OH} for outputs.
4. X = V_{IH} or V_{IL}.
5. CP = clock pulse.
6. NC = no change.

UP Count Sequence Table

Q_A (LSB)	Q_B	Q_C	Q_D (MSB)
L	L	L	L
H	L	L	L
L	H	L	L
H	H	L	L
L	L	H	L
H	L	H	L
L	H	H	L
H	H	H	L
L	L	L	H
H	L	L	H
L	H	L	H
H	H	L	H
L	L	H	H
H	L	H	H
L	H	H	H
H	H	H	H

FIGURE 3. Truth tables - Continued.

DEVICE TYPE 07

BCD count sequence (see note 1)				
Count	Output			
	D	C	B	A
0	L	L	L	L
1	L	L	L	H
2	L	L	H	L
3	L	L	H	H
4	L	H	L	L
5	L	H	L	H
6	L	H	H	L
7	L	H	H	H
8	H	L	L	L
9	H	L	L	H

Reset count (see note 2)				
Reset inputs				Output
R0(1)	R0(2)	R9(1)	R9(2)	D C B A
H	H	L	X	L L L L
H	H	X	L	L L L L
X	X	H	H	H L L H
X	L	X	L	COUNT
L	X	L	X	COUNT
L	X	X	L	COUNT
X	L	L	X	COUNT

NC – No internal connection.

NOTES:

1. Output A connected to input BD for BCD count.
2. X indicates that either a logical H or a logical L may be present.
3. When used as a binary coded decimal decade counter, the BD input must be externally connected to the A output. The A input receives the incoming count, and a count sequence is obtained in accordance with the BCD count sequence truth table shown above. In addition to a conventional zero reset, inputs are provided to reset a BCD count for nine's complement decimal applications.
4. If a symmetrical divide-by-ten count is desired for frequency synthesizers or other applications requiring division of a binary count by a power of ten, the D output must be externally connected to the A input. The input count is then applied at the BD input and a divide-by-ten square wave is obtained at output A.
5. For operation as a divide-by-two counter and a divide-by-five counter, no external interconnections are required. Flip-flop A is used as a binary element for the divide-by-two function. The BD input is used to obtain binary divide-by-five operation at the B, C, and D outputs. In this mode, the two counters operate independently; however, all four flip-flops are reset simultaneously.

FIGURE 3. Truth tables - Continued.

DEVICE TYPE 08 TRUTH TABLE

Inputs at time t_n								Outputs at time T_n+1							
Count up	Count down	Load	A	B	C	D	Clear	Q_A	Q_B	Q_C	Q_D	Carry		Borrow	
H	H	H	X	X	X	X	L	NC	NC	NC	NC	H		H	
H	H	H	X	X	X	X	H	L	L	L	L	H		H	
H	H	L	X	X	X	X	L	A	B	C	D	Count up	Count down	Count up	Count Down
												L if count = 9 H if count > 9	NC	NC	L if count = 0 H if count ≠ 0
P	H	H	X	X	X	X	L	Previous count plus 1 (note 1)				L if count = 9 H if count > 9	NA	NC	NA
H	P	H	X	X	X	X	L	Previous count minus 1 (note 2)				NA	NC	NA	L if count = 0 H if count ≠ 0

NOTES:
1. See up count sequence table.
2. See down count sequence table.
3. L = VIL for inputs, VOL for outputs.
4. H = VIH for inputs, VOH for outputs.
5. X = VIH or VIL.
6. NC = no change.
7. NA = not applicable.
8. P = Positive going pulse.

FIGURE 3. Truth tables - Continued.

DEVICE TYPE 08

UP COUNT SEQUENCE TABLE

Q_A (LSB)	Q_B	Q_C	Q_D (MSB)	Carry
L	L	L	L	H
H	L	L	L	H
L	H	L	L	H
H	H	L	L	H
L	L	H	L	H
H	L	H	L	H
L	H	H	L	H
H	H	H	L	H
L	L	L	H	H
H	L	L	H	L

DOWN COUNT SEQUENCE TABLE

Q_A (LSB)	Q_B	Q_C	Q_D (MSB)	Borrow
H	L	L	H	H
L	L	L	H	H
H	H	H	L	H
L	H	H	L	H
H	L	H	L	H
L	L	H	L	H
H	H	L	L	H
L	H	L	L	H
H	L	L	L	H
L	L	L	L	L

FIGURE 3. Truth tables - Continued.

DEVICE TYPE 09 TRUTH TABLE

Inputs at time t_n								Outputs at time T_{n+1}							
Count up	Count down	Load	A	B	C	D	Clear	Q_A	Q_B	Q_C	Q_D	Carry		Borrow	
H	H	H	X	X	X	X	L	NC	NC	NC	NC	H		H	
H	H	H	X	X	X	X	H	L	L	L	L	H		H	
												Count up	Count down	Count up	Count down
H	H	L	X	X	X	X	L	A	B	C	D	L if count = 15 H if count > 15	NC	NC	L if count = 0 H if count ≠ 0
P	H	H	X	X	X	X	L	Previous count plus 1 (note 1)				L if count = 15 H if count > 15	NA	NC	NA
H	P	H	X	X	X	X	L	Previous count minus 1 (note 2)				NA	NC	NA	L is count = 0 H if count ≠ 0

NOTES:
1. See up count sequence table.
2. See down count sequence table.
3. L = V_{IL} for inputs, V_{OL} for outputs.
4. H = V_{IH} for inputs, V_{OH} for outputs.
5. X = V_{IH} or V_{IL}.
6. NC = no change.
7. NA = not applicable.
8. P = Positive going pulse.

FIGURE 3. Truth tables - Continued.

DEVICE TYPE 09

UP COUNT SEQUENCE TABLE

Q_A (LSB)	Q_B	Q_C	Q_D (MSB)	Carry
L	L	L	L	H
H	L	L	L	H
L	H	L	L	H
H	H	L	L	H
L	L	H	L	H
H	L	H	L	H
L	H	H	L	H
H	H	H	L	H
L	L	L	H	H
H	L	L	H	H
L	H	L	H	H
H	H	L	H	H
L	L	H	H	H
H	L	H	H	H
L	H	H	H	H
H	H	H	H	L

DOWN COUNT SEQUENCE TABLE

Q_A (LSB)	Q_B	Q_C	Q_D (MSB)	Borrow
H	H	H	H	H
L	H	H	H	H
H	L	H	H	H
L	L	H	H	H
H	H	L	H	H
L	H	L	H	H
H	L	L	H	H
L	L	L	H	H
H	H	H	L	H
L	H	H	L	H
H	L	H	L	H
L	L	H	L	H
H	H	L	L	H
L	H	L	L	H
H	L	L	L	H
L	L	L	L	L

FIGURE 3. Truth tables - Continued.

DEVICE TYPES 03 AND 05: SYNCHRONOUS DECADE COUNTERS

typical clear, preset, count, and inhibit sequences

Illustrated below is the following sequence:

1. Clear outputs to zero.
2. Preset to BCD seven.
3. Count to eight, nine, zero, one, two, and three.
4. Inhibit.

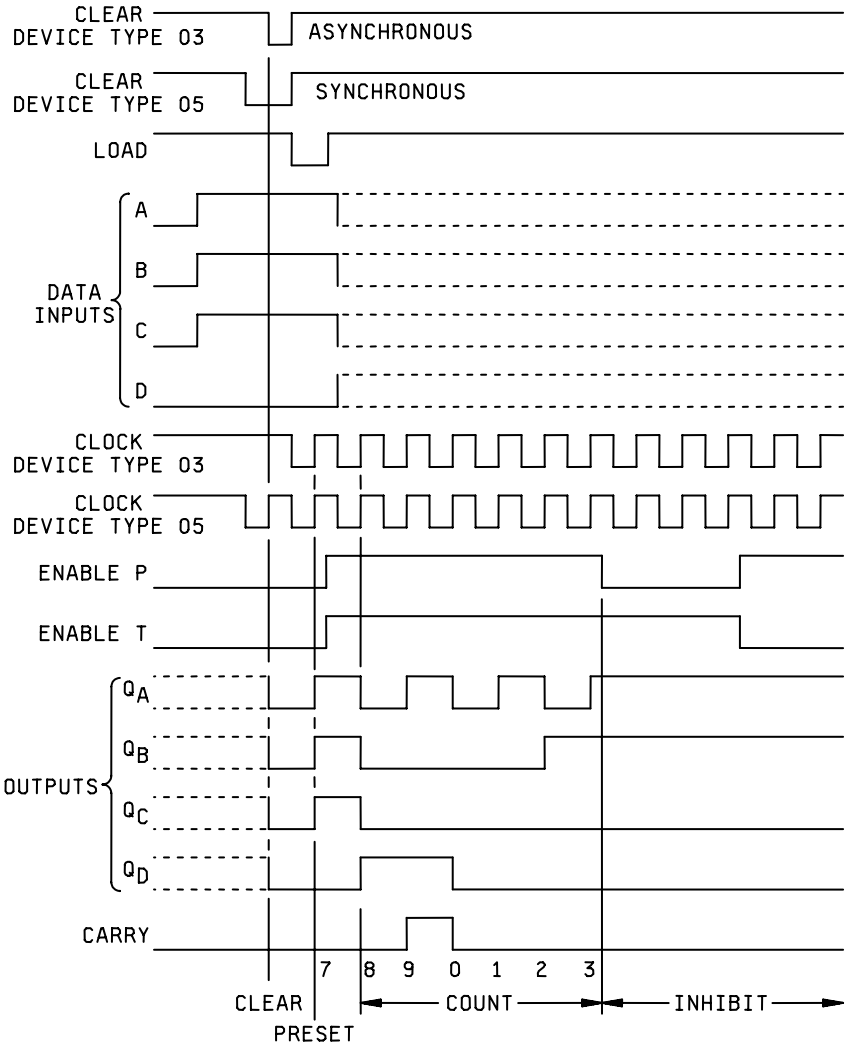

FIGURE 4. Timing diagrams.

DEVICE TYPES 04 AND 06: SYNCHRONOUS BINARY COUNTERS

typical clear, preset, count, and inhibit sequences.

Illustrated below is the following sequence:
1. Clear outputs to zero
2. Preset to binary twelve.
3. Count to thirteen, fourteen, fifteen, zero, one, and two.
4. Inhibit.

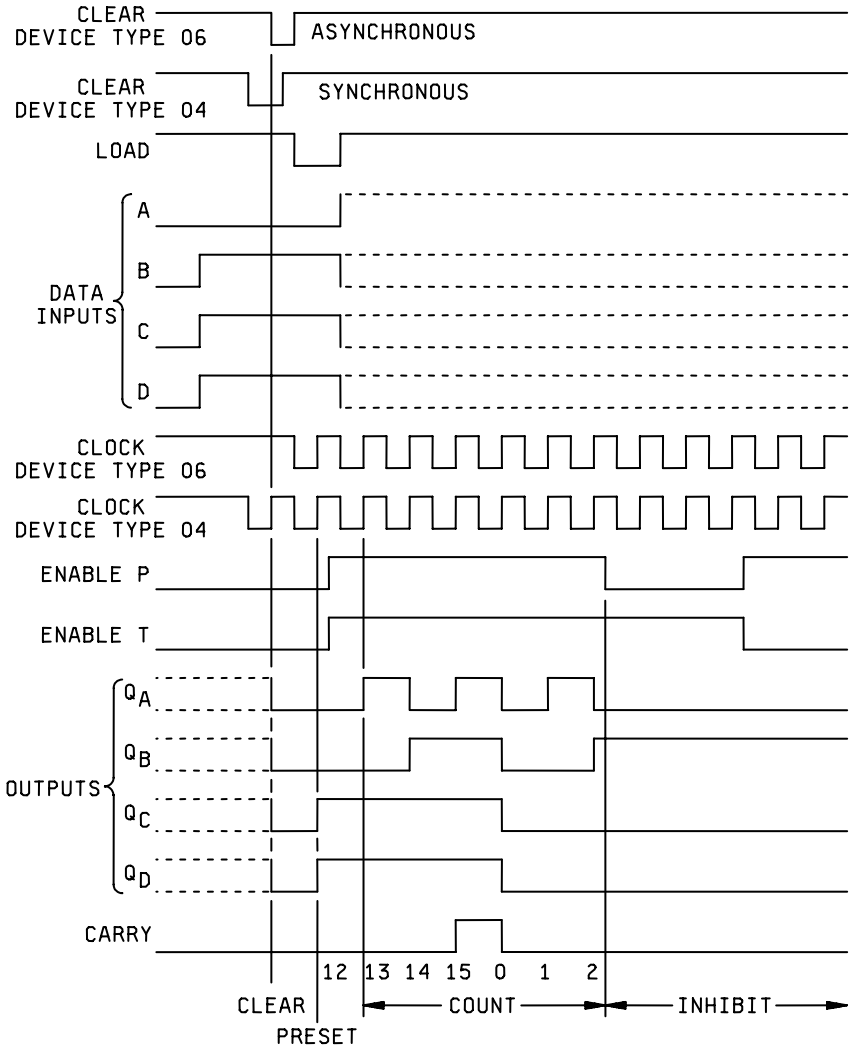

FIGURE 4. Timing diagrams - Continued.

typical clear, load, and count sequences

Illustrated below is the following sequence:
1. Clear outputs to zero.
2. Load (preset) to BCD seven.
3. Count up to eight, nine, carry, zero, one, and two.
4. Count down to one, zero, borrow, nine, eight, and seven.

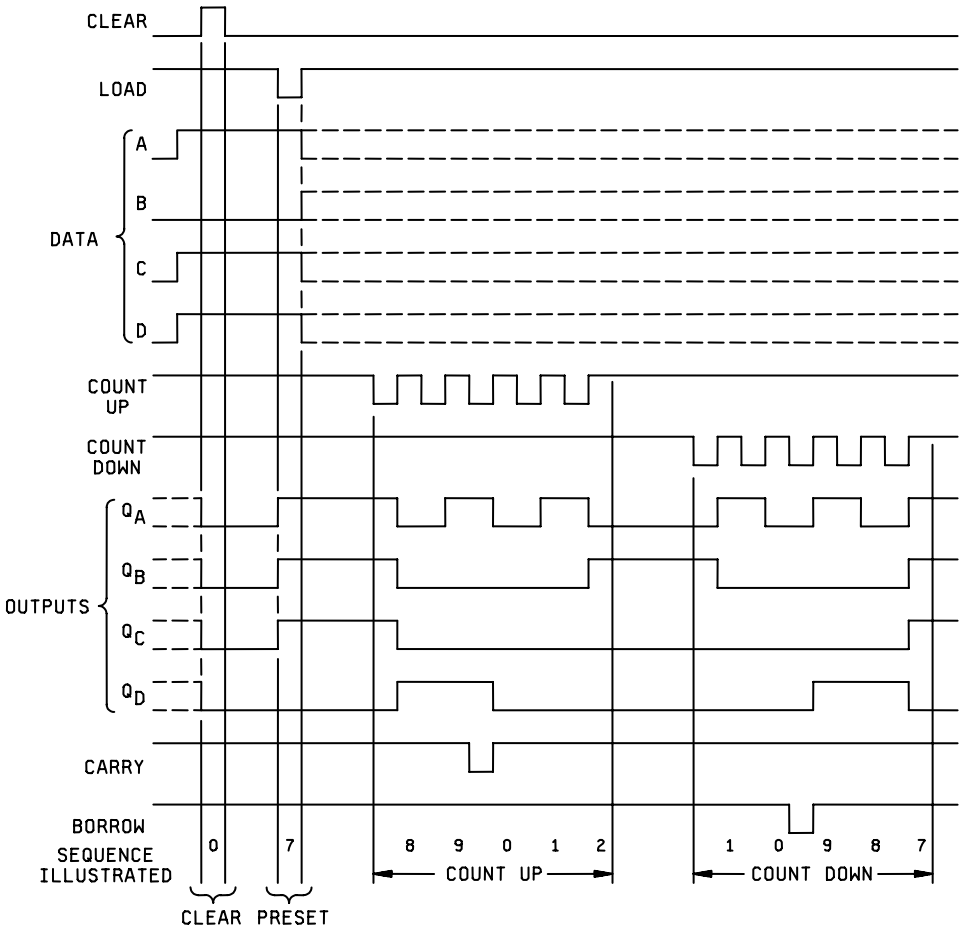

DEVICE TYPE 08 SYNCHRONOUS DECADE COUNTER

NOTES:
A. Clear overrides load, data, and count inputs.
B. When counting up, count down input must be high; when counting down, count-up input must be high.

FIGURE 4. Timing diagrams - Continued.

typical clear, load, and count sequences

Illustrated below is the following sequence:
1. Clear outputs to zero.
2. Load (preset) to binary thirteen.
3. Count up to fourteen, fifteen, carry, zero, one, and two.
4. Count down to one, zero, borrow, fifteen, fourteen, and thirteen.

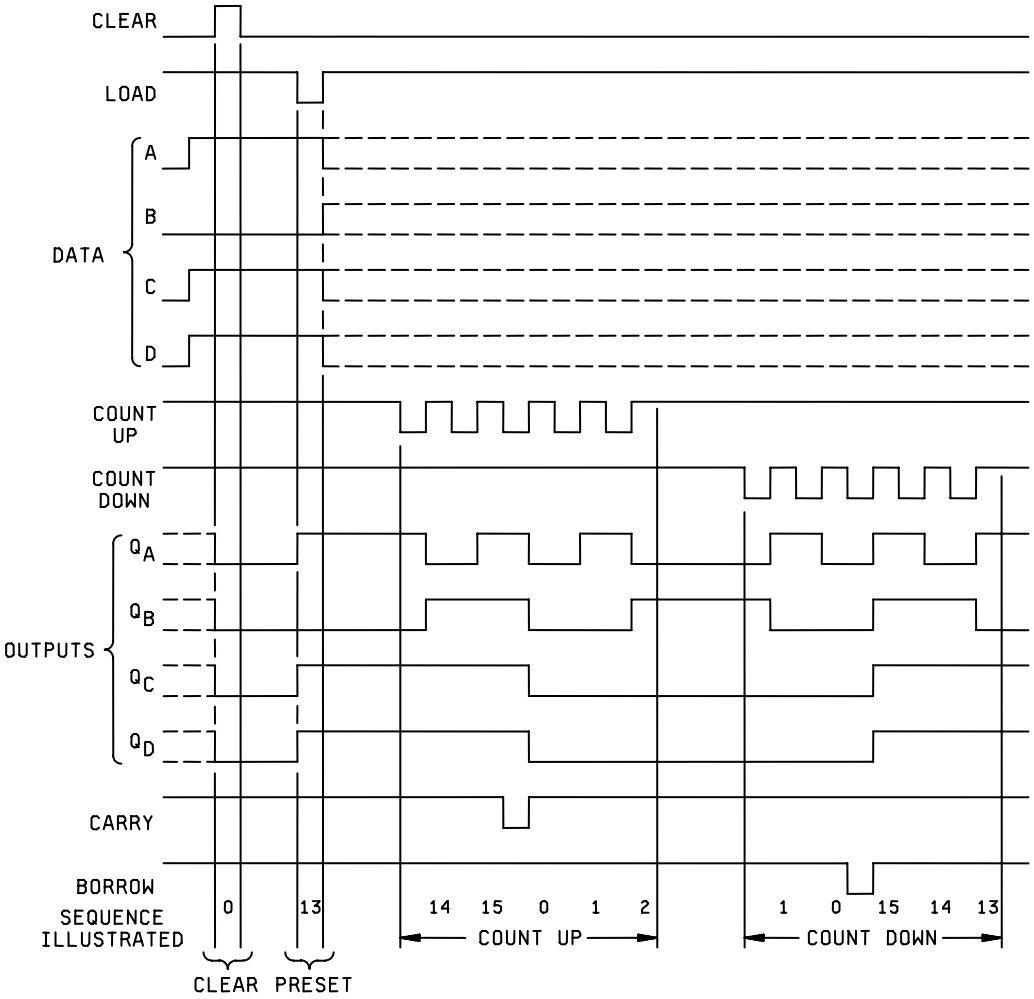

DEVICE TYPE 09: SYNCHRONOUS BINARY COUNTER

NOTES:
A. Clear overrides load, data, and count inputs.
B. When counting up, count-down input must be high; when counting down, count-up input must be high.

FIGURE 4. Timing diagrams - Continued.

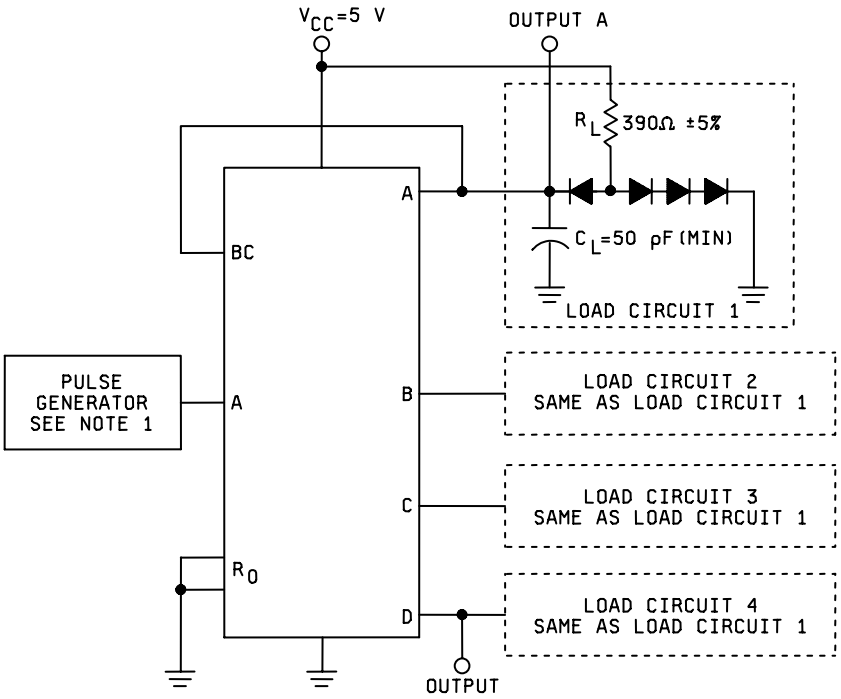

TEST CIRCUIT

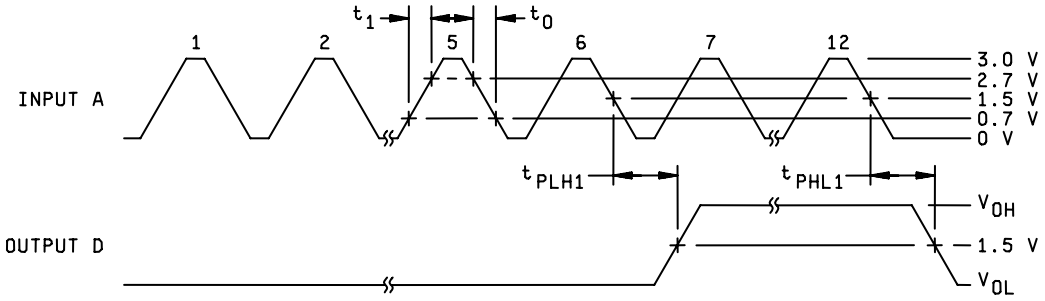

VOLTAGE WAVEFORMS

NOTES:

1. The pulse generator has the following characteristics: Vgen = 3 V, $t_0 = t_1 \leq 15$ ns, tp = .5 µs, PRR ≤ 1 MHz, $Z_{OUT} \approx 50\Omega$.
2. All diodes are 1N3064, or equivalent.
3. C_L includes probe and jig capacitance.
4. Voltage values are with respect to ground terminal.
5. F_{MAX} pulse generator has the following characteristics: Vgen = 3.0 V ±0.2 V, $t_0 = t_1 \leq 10$ ns, tp = 50 ns, PRR = 10 MHz.

FIGURE 5. Switching time test circuits and waveforms for device type 01.

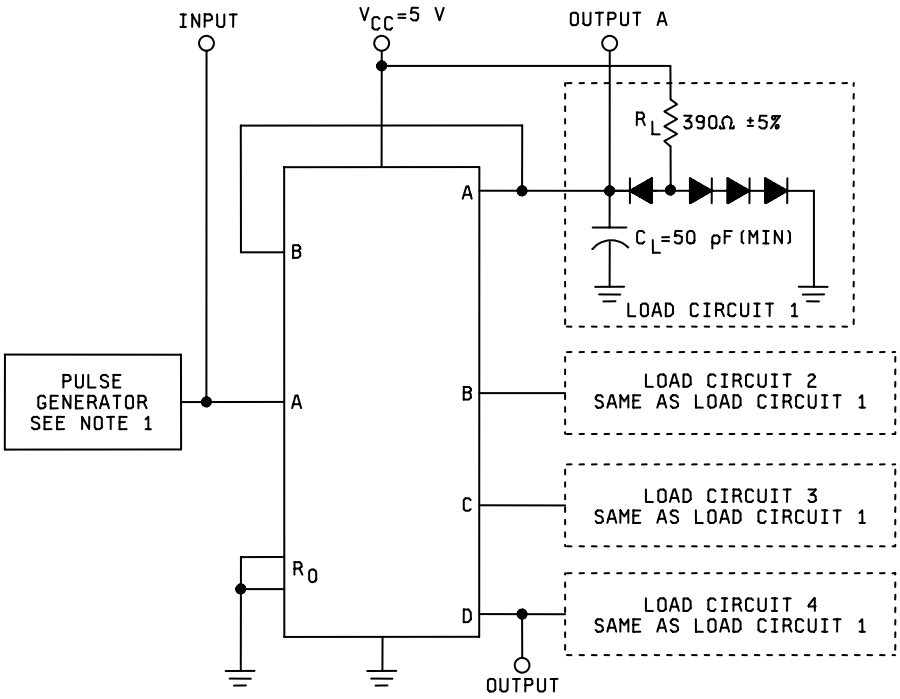

TEST CIRCUIT

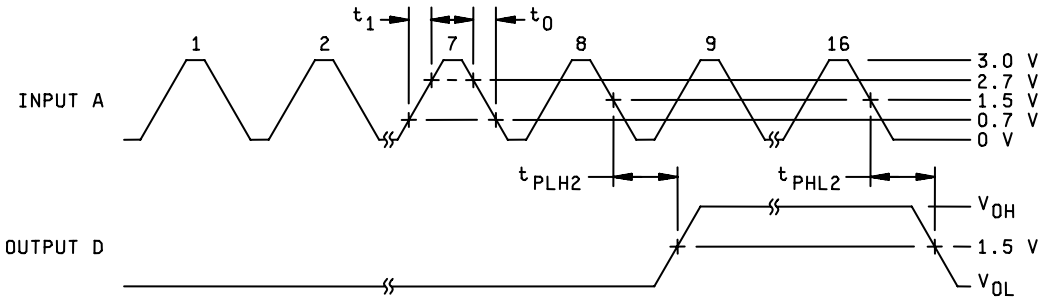

VOLTAGE WAVEFORMS

NOTES:

1. The pulse generator has the following characteristics: V_{gen} = 3 V, t_0 = t_1 < 15 ns, t_p = .5 µs, PRR ≤ 1 MHz, Z_{OUT} ≈ 50Ω.
2. All diodes are 1N3064 or equivalent.
3. C_L includes probe and jig capacitance.
4. Voltage values are with respect to ground terminal.
5. F_{MAX} pulse generator has the following characteristics: V_{gen} = 3.0 V ±0.2 V, t_0 = t_1 ≤ 10 ns, t_p = 50 ns, PRR = 10 MHz.

FIGURE 6. Switching time test circuit and waveforms for device type 02.

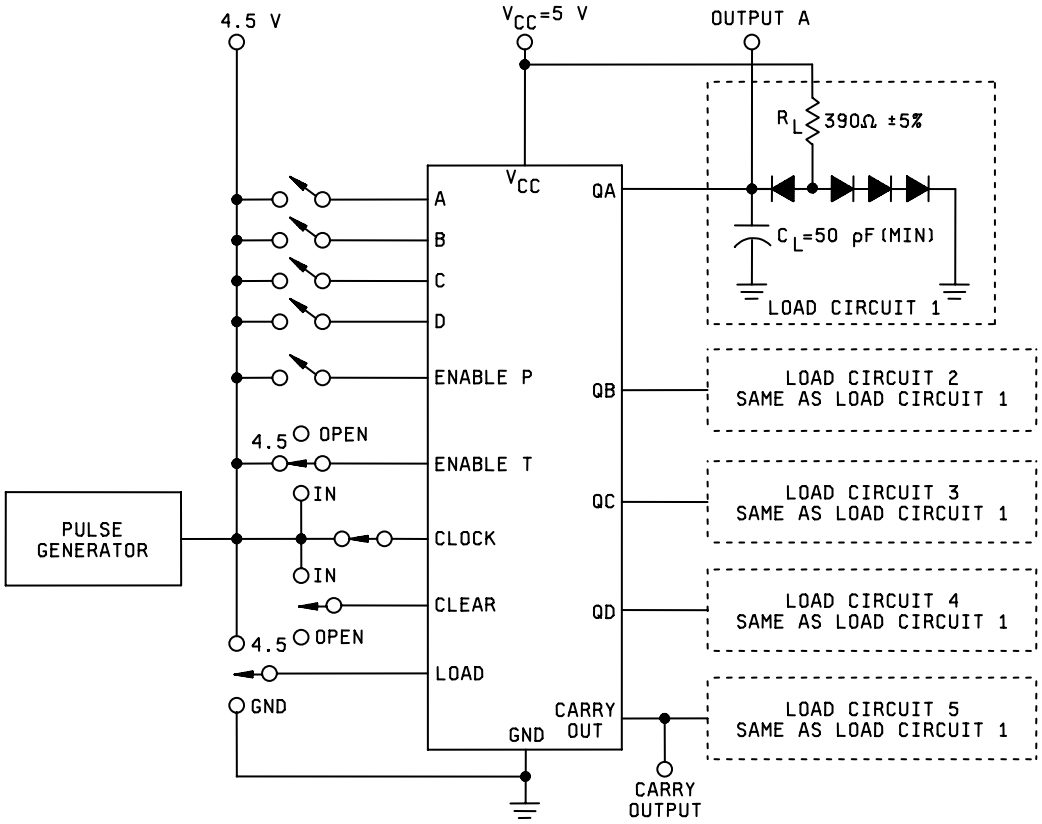

NOTES:

1. The pulse generator has the following characteristics: t_r < 10 ns, t_f < 10 ns, PRR < 1 MHz, duty cycle < 50%, Z_{OUT} ≈ 50Ω.
2. All diodes are 1N3064, or equivalent.
3. C_L includes probe and jig capacitance.
4. Voltage values are with respect to ground terminal.
5. Load circuits on a given output are only required where the specific test given in table III indicates “OUT” on that output. Load circuits may otherwise be omitted.

FIGURE 7. Switching time test circuits and waveform for device types 03, 04, 05, and 06.

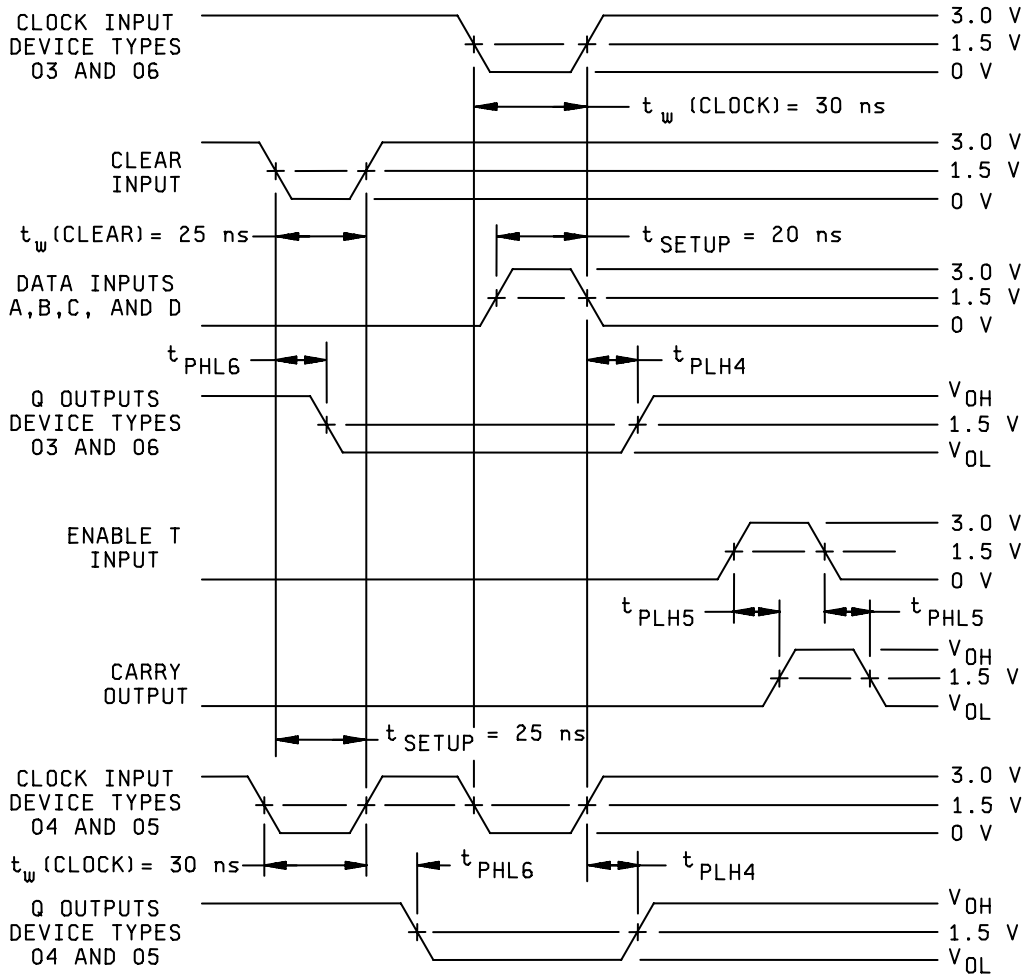

NOTES:

1. The input pulses are supplied by a generator having the following characteristics: $t_r \leq 10$ ns, $t_f \leq 10$ ns, PRR ≤ 1 MHz, $Z_{OUT} = 50\ \Omega$.
2. Enable T duty cycle $\leq 50\%$, PRR = 1 MHz.

FIGURE 7A. Switching time test circuits and waveforms for device types 03, 04, 05, and 06 – Continued.

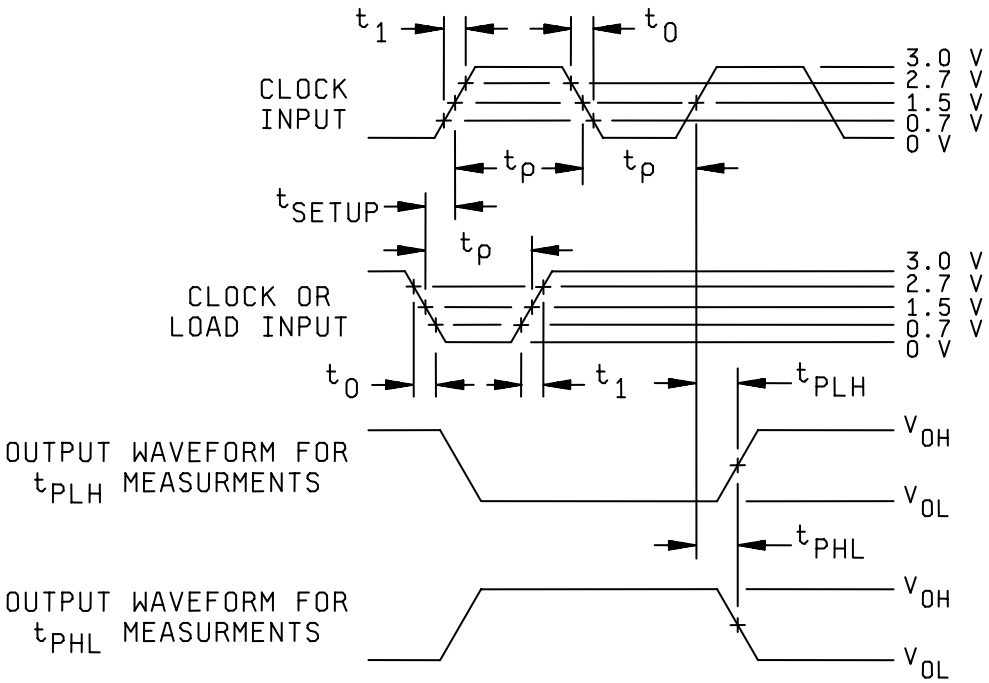

NOTES:

1. The input pulses are supplied by generators having the following characteristics: $t_0 = t_1 \leq 10$ ns, PRR ≤ 1.0 MHz, $Z_{OUT} \approx 50\Omega$.
2. The t_{SETUP} for load pulse = 30 ns; t_{SETUP} for clear pulse = 25 ns.

FIGURE 7B. Switching time test circuits and waveforms for device types 03, 04, 05 and 06 – Continued.

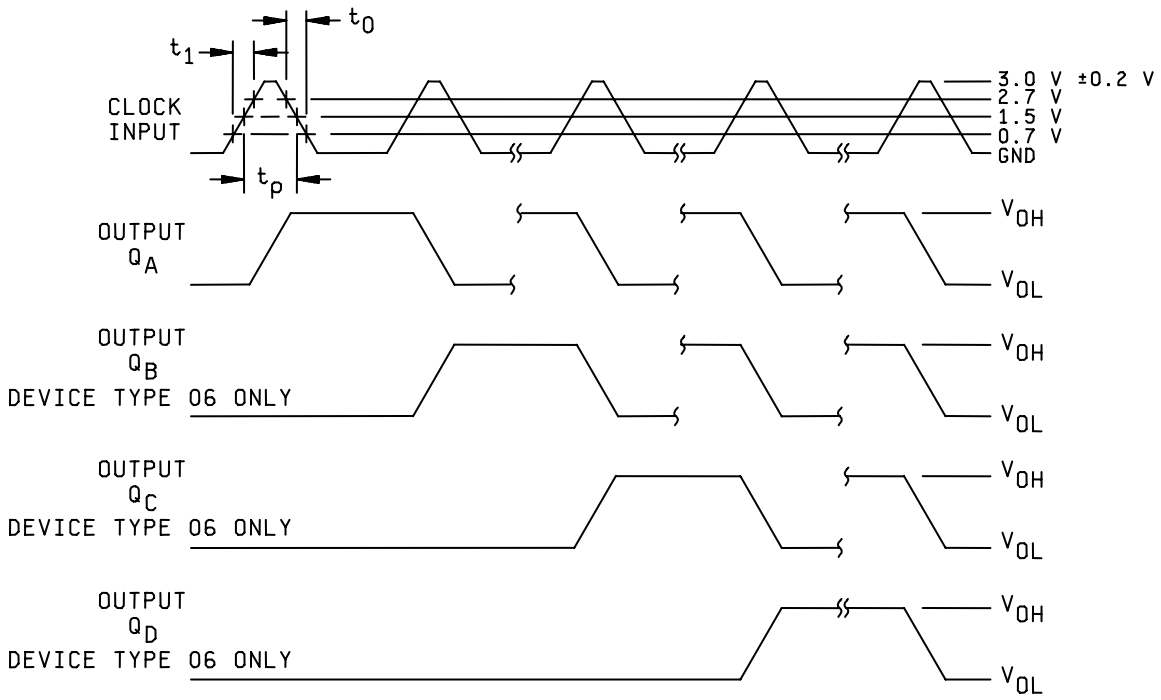

NOTES:

1. The pulse generator has the following characteristics: $t_0 = t_1 = 5 \pm 1$ ns, $t_p = 25$ ns, $V_{gen} = 3.0$ V, $Z_{OUT} \approx 50\Omega$, PRR = 20 MHz.
2. The output frequency shall be:
   a. Output Q_A = one-half the input frequency.
   b. Output QB = one-quarter the input frequency.
   c. Output QC = one-eighth the input frequency.
   d. Output QD = one-sixteenth the input frequency.

FIGURE 7C. F_{max} waveforms for device types 03, 04, 05, and 06 – Continued.

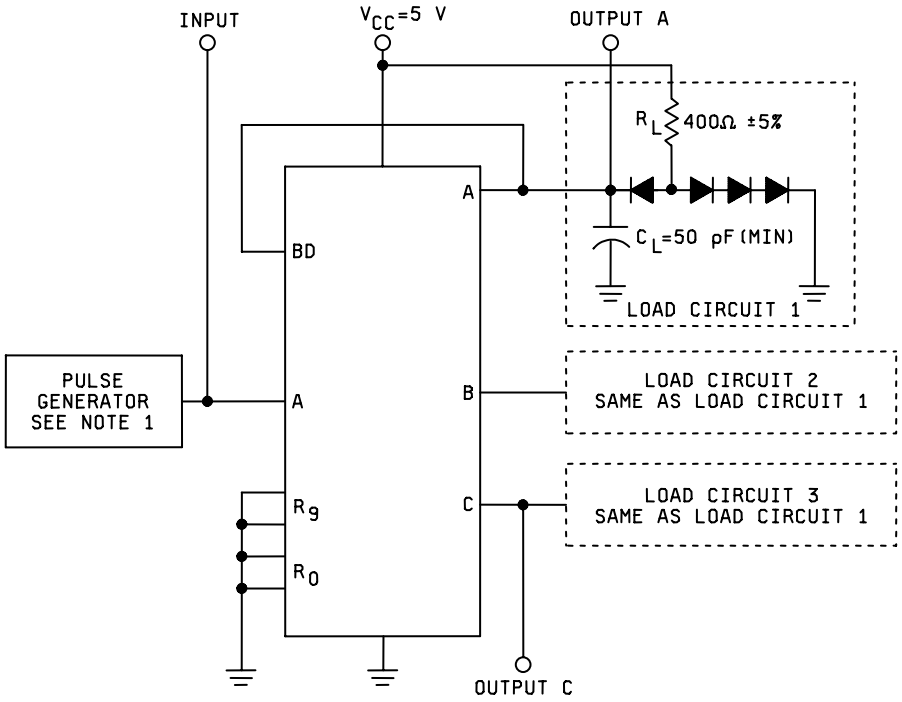

TEST CIRCUIT

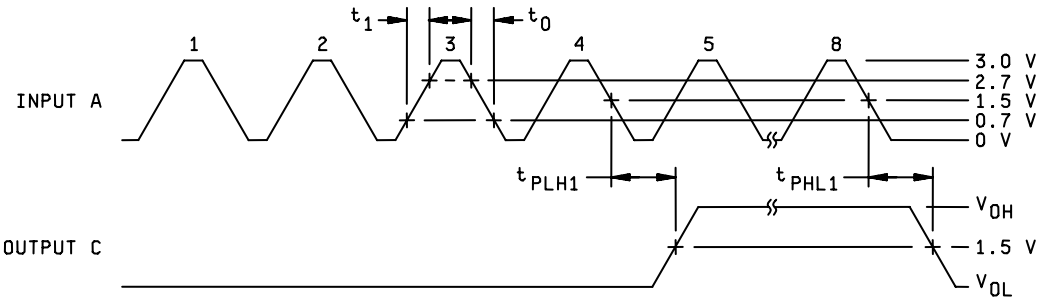

VOLTAGE WAVEFORMS

NOTES:

1. The pulse generator has the following characteristics: V_{gen} = 3 V, $t_0 = t_1 \leq$ 15 ns, t_p = .5 µs, PRR $\leq$ 1 MHz, $Z_{OUT} \approx$ 50Ω.
2. All diodes are 1N3064 or equivalent.
3. C_L includes probe and jig capacitance.
4. Voltage values are with respect to ground terminal.
5. F_{MAX} pulse generator has the following characteristics: Vgen = 3.0 V ±0.2 V, $t_0 = t_1$ < 10 ns, tp = 50 ns, PRR = 10 MHz.

FIGURE 8. Switching time test circuit and waveforms for device type 07.

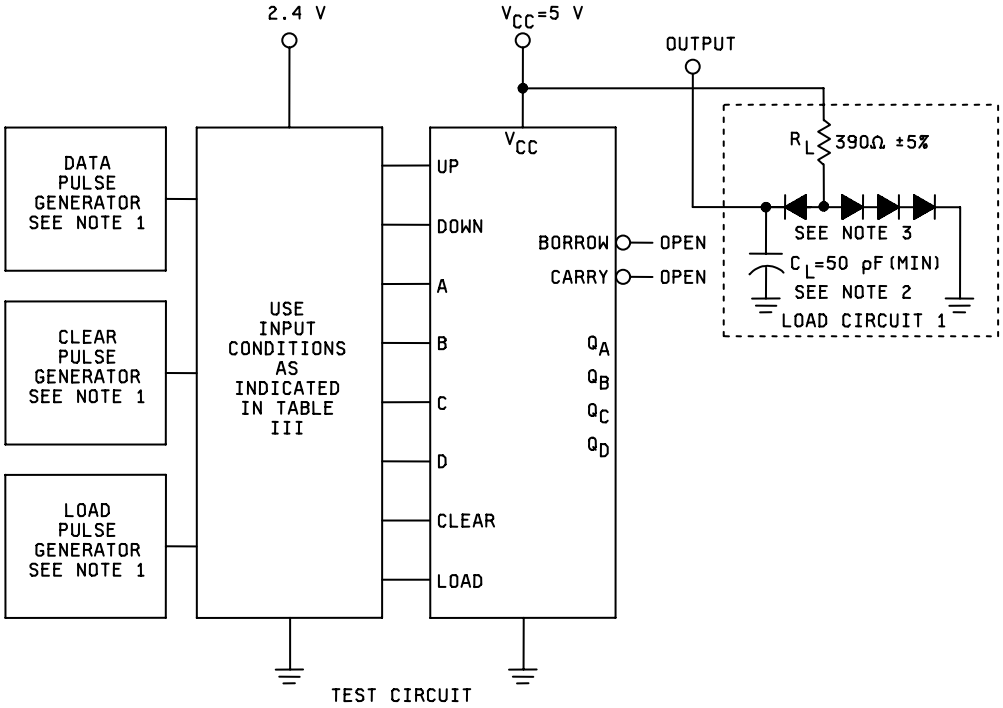

TEST CIRCUIT

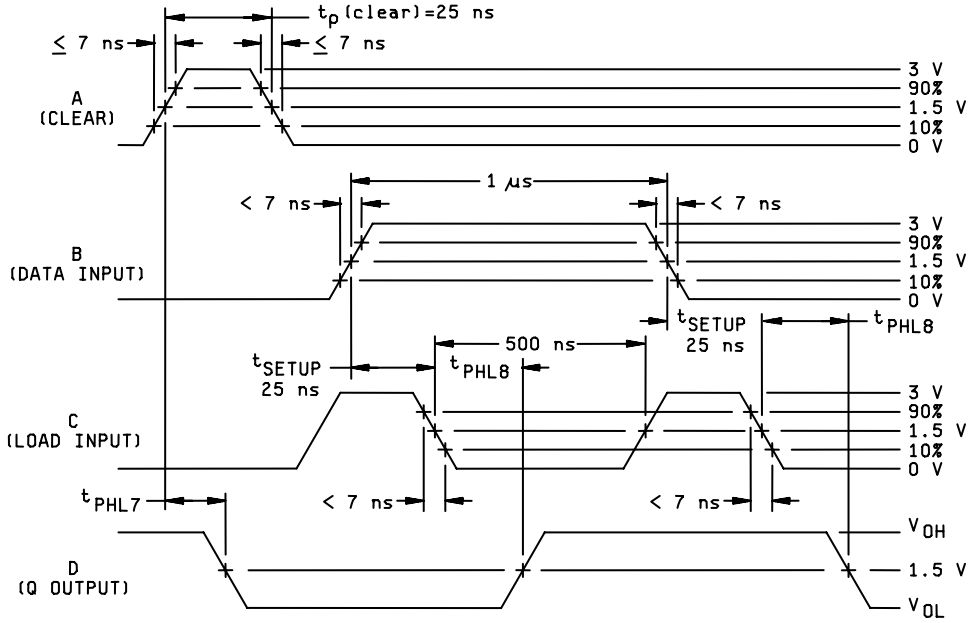

VOLTAGE WAVEFORMS

NOTES:

1. The pulse generators have the following characteristics: $Z_{out} \approx 50\ \Omega$; for the data pulse generator, PRR $\leq$ 500 kHz, duty cycle = 50%; for the load pulse generator, PRR = 1 MHz, duty cycle = 50%.
2. C_L includes probe and jig capacitance.
3. All diodes are 1N3064, or equivalent.

FIGURE 9. Switching time test circuits and waveforms for device types 08 and 09.

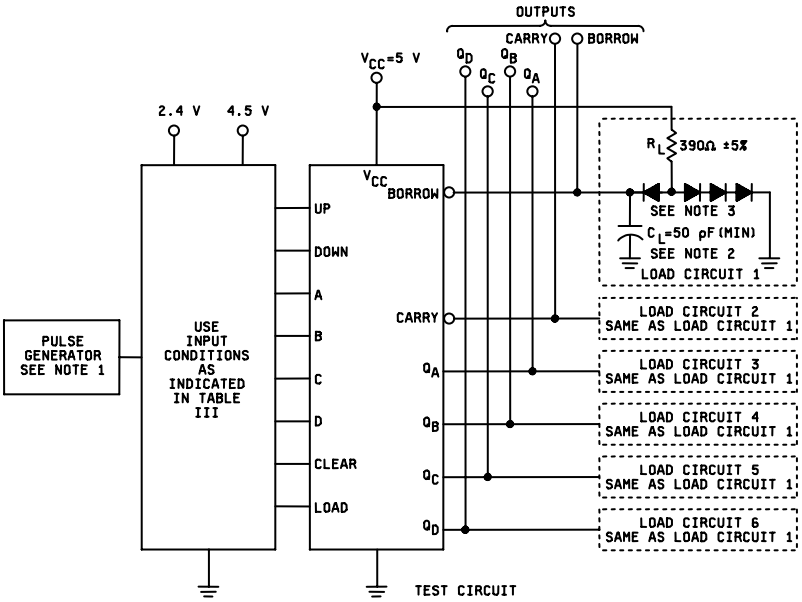

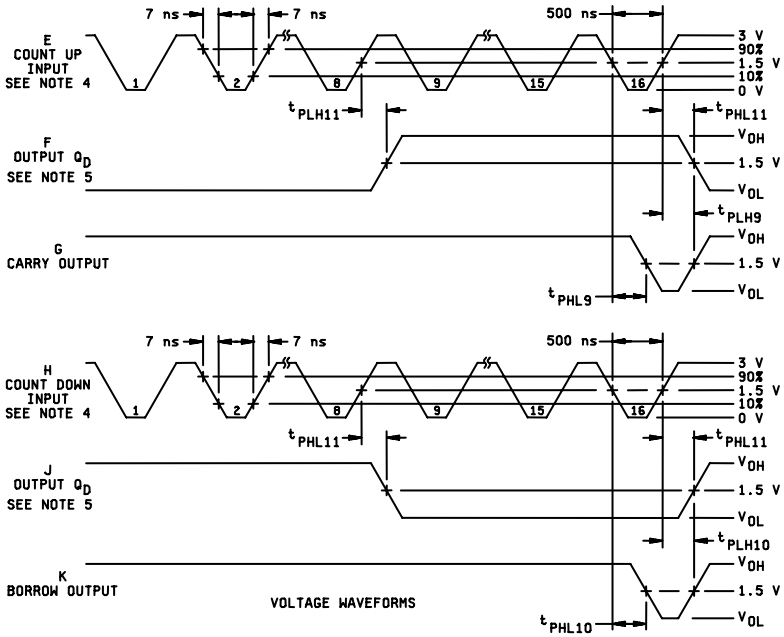

NOTES:

1. The pulse generator has the following characteristics: PRR ≤ 1 MHz, Z_{OUT} ≈ 50 Ω, duty cycle = 50%.
2. C_L includes probe and jig capacitance.
3. All diodes are 1N3064, or equivalent.
4. Count-up and count-down pulse shown are for device type 09 binary counters. Count cycle for the device type 08 decade counter is 1 through 10.
5. Waveforms for outputs Q_A, Q_B, and Q_C are omitted to simplify the drawing.
6. Load circuits on a given output are only required where the specific test given in table III indicates "OUT" on that output. Load circuits may otherwise be omitted.

FIGURE 9A. Switching time test circuits and waveforms for device types 08 and 09 – Continued.

TABLE III. Group A inspection for device type 01.
Terminal conditions 13/

Subgroup	Symbol	MIL-STD-883 method	Case A,B,D	1	2	3	4	5	6	7	8	9	10	11	12	13	14	Meas. terminal	Test limits Min	Max	Unit
			Case C	1	2	3	4	5	6	7	8	9	10	11	12	13	14				
			Test No.	In BC	NC	NC	NC	V_{CC}	$_0$ (1)	R_0 (2)	QD	QC	GND	QB	QA	NC	In A				
1	V_{OL}	3007	1	2.0 V				4.5 V	2.0 V	2.0 V	16 mA		GND				GND	QD		0.4	V
T_C = 25°C	"	"	2	2.0 V				"	"	"		16 mA	"				GND	QC		"	"
	"	"	3	2.0 V				"	"	"			"	16 mA			GND	QB		"	"
	"	"	4	GND				"	"	"			"		16 mA		2.0 V	QA		"	"
	V_{OH}	3006	5	1/ 6/				"	1/	1/	-400 µA		"				GND	QD	2.4		V
		"	6	1/ 7/				"	"	"		-400 µA	"				GND	QC	"		"
		"	7	1/ 8/				"	"	"			"	-400 µA			GND	QB	"		"
	"	"	8	GND				"	"	"			"		-400 µA		1/ 8/	QA	"		"
"	I_{OS}	3011	9	2/ 6/				5.5 V	2/	2/	GND		"					QD	-20	-57	mA
"		"	10	2/ 7/				"	"	"		GND	"				GND	QC	"	"	"
		"	11	2/ 8/				"	"	"			"	GND		GND	GND	QB	"	"	"
	"	"	12	GND				"	"	"			"		GND		2/ 8/	QA	"	"	"
"	I_{IH1}	3010	13					"	2.4 V	GND			"					R_0(1)			µA
"	I_{IH1}	"	14					"	GND	2.4 V			"					R_0(2)			"
	I_{IH2}	"	15					"	5.5 V	GND			"					R_0(1)	40		"
	I_{IH2}	"	16					"	GND	5.5 V			"					R_0(2)	40		"
	I_{IH3}	"	17					"					"				2.4 V	In A	100	80	"
	I_{IH4}	"	18					"					"				5.5 V	In A	100	200	"
	I_{IH5}	"	19	2.4 V				"					"					In BC		160	"
	I_{IH6}	"	20	5.5 V				"					"					In BC		400	"
	I_{IL1}	3009	21					"	0.4 V	4.5 V			"					R_0(1)	14/	14/	mA
	I_{IL1}	"	22					"	4.5 V	0.4 V			"					R_0(2)	"	"	"
	I_{IL2}	"	23					"	2/	2/			"				0.4 V	In A	"	"	"
	I_{IL3}	"	24	0.4 V				"	2/	2/			"					In BC	"	"	"
	I_{CC}	3005	25	GND				"	2/	2/			"				GND	V_{CC}		44	mA
	V_{IC}		26					4.5 V	-12mA				"					R_0(1)			V
	"		27					"		-12mA			"					R_0(2)			"
	"		28					"					"				-12mA	In A	-1.5	"	"
	"		29	-12 mA				"					"					In BC	"	"	"
2	Same tests, terminal conditions and limits as for subgroup1, except T_C = 125°C and V_{IC} tests are omitted.																				
3	Same tests, terminal conditions and limits as for subgroup1, except T_C = -55°C and V_{IC} tests are omitted.																				

See footnotes at end of device type 01.

TABLE III. Group A inspection for device type 01 – Continued.
Terminal conditions 13/

Subgroup	Symbol	MIL-STD-883 method	Case A,B,D	1	2	3	4	5	6	7	8	9	10	11	12	13	14	Meas. terminal	Test limits		
			Case C	1	2	3	4	5	6	7	8	9	10	11	12	13	14		Min	Max	Unit
			Test No.	In BC	NC	NC	NC	V_{CC}	$_0$(1)	R_0(2)	QD	QC	GND	QB	QA	NC	In A				
7	Func-	3014	30	B 3/				4.5 V[R]	A 3/	A 3/	L	L	GND	L	L		B 3/				
T_C = 25°C	tional	"	31	A				"	"	"	"	"	"	"	"		"				
	tests 4/	"	32	B				"	"	"	"	"	"	"	"		"				
	"	"	33	B				"	B	"	"	"	"	"	"		"				
	"	"	34	A				"	"	"	"	"	"	"	"		"				
	"	"	35	B				"	"	"	"	"	"	H	"		"				
	"	"	36	B				"	A	"	"	"	"	L	"		"				
	"	"	37	B				"	"	B	"	"	"	L	"		"				
	"	"	38	A				"	"	B	"	"	"	L	"		"				
	"	"	39	B				"	A	B	"	"	"	H	"		"				
	"	"	40	A				"	"	"	"	"	"	H	"		"				
	"	"	41	B				"	"	"	"	H	"	L	"		"				
	"	"	42	A				"	"	"	"	H	"	"	"		"				
	"	"	43	B				"	"	"	H	L	"	"	"		"				
	"	"	44	A				"	"	"	"	"	"	"	"		"				
	"	"	45	B				"	"	"	"	"	"	H	"		"				
	"	"	46	A				"	"	"	"	"	"	H	"		"				
	"	"	47	B				"	"	"	"	H	"	L	"		"				
	"	"	48	B				"	"	A	L	L	"	"	"		"			See 5/	
	"	"	49	B				"	B	"	"	"	"	"	"		"				
	"	"	50	A				"	"	"	"	"	"	"	"		"				
	"	"	51	B				"	"	"	"	"	"	H	"		"				
	"	"	52	A				"	"	"	"	"	"	H	"		"				
	"	"	53	B				"	"	"	"	H	"	L	"		"				
	"	"	54	A				"	"	"	"	H	"	"	"		"				
	"	"	55	B				"	"	"	H	L	"	"	"		"				
	"	"	56	A				"	"	"	"	"	"	"	"		"				
	"	"	57	B				"	"	"	"	"	"	H	"		"				
	"	"	58	A				"	"	"	"	"	"	H	"		"				
	"	"	59	B				"	"	"	"	H	"	L	"		"				
	"	"	60	A				"	"	"	"	H	"	"	"		"				
	"	"	61	B				"	"	"	L	L	"	"	"		"				
	"	"	62	"				"	"	"	"	"	"	"	"		A				
	"	"	63	"				"	"	"	"	"	"	"	H		B				
	"	"	64	"				"	"	"	"	"	"	"	H		A				
	"	"	65	"				"	"	"	"	"	"	"	L		B				
8	Repeat subgroup 7 at T_C = 125°C and T_C = -55°C.																				

See footnotes at end of device type 01.

TABLE III. Group A inspection for device type 01 – Continued.
Terminal conditions 13/

Subgroup	Symbol	MIL-STD-883 method	Case A,B,D	1	2	3	4	5	6	7	8	9	10	11	12	13	14	Meas. terminal	Test limits		
			Case C	1	2	3	4	5	6	7	8	9	10	11	12	13	14				
			Test No.	In BC	NC	NC	NC	V_{CC}	$_0$(1)	R_0(2)	QD	QC	GND	QB	QA	NC	In A		Min	Max	Unit
9	F_{MAX} 9/	Fig 5	66					5.0 V R	GND	GND	12/	12/		12/	OUT 11/		IN	QA	10		MHz
T_C = 25°C	t_{PLH1}	"	67	10/				"	"	"	OUT 11/	11/GND	"	11/	10/ 11/			QD	20	100	ns
	t_{PHL1}	"	68	10/				"	"	"	OUT 11/	11/	"	11/	10/ 11/	"		QD	20	100	ns
10	F_{MAX} 9/	Fig 5	69					"	"	"	12/	12/	"	12/	OUT 11/	"	IN	QA	10		MHz
T_C = 125°C	t_{PLH1}	"	70	10/				"	"	"	OUT 11/	11/	"	11/	10/ 11/			QD	20	115	ns
	t_{PHL1}	"	71	10/				"	"	"	OUT 11/	11/	"	11/	10/ 11/	"		QD	20	115	ns
11	Same tests, terminal conditions and limits as for subgroup 10, except T_C = -55°C.															"					

1/ Momentarily apply 2.4 V, then ground prior to taking measurements to set the device in desired state. Maintain ground for measurement.
2/ Apply 4.5 V pulse then ground prior to taking measurements to set the device in the desired state. Maintain ground for measurement.
3/ A ≥ 2.0 V, B ≤ 0.8 V. Input voltages shown are the maximum for V_{IL} and the minimum for V_{IH}.
4/ Only a summary of attributes data is required.
5/ Output voltages shall be either:
(a) H = 2.4 volts minimum and L = 0.4 volt maximum when using a high speed checker double comparator, or
(b) H ≥ 1.5 volts and L ≤ 1.5 volts when using a high speed checker single comparator.
6/ Input must be applied 3 times after R_0 pulses.
7/ Input must be applied 2 times after R_0 pulses.
8/ Input must be applied once after R_0 pulses.
9/ F_{MAX}, minimum limit specified is the frequency of the input pulse. The output frequency shall be one-half of the input frequency.
10/ Connect terminals together during test.
11/ See test figure 5 for terminal load.
12/ Omit specified loads for this test.
13/ Terminal conditions (pins not designated may be H ≥ 2.0 V, or L ≤ 0.8 V, or open).
14/ The limits shown shall be as follows:

	Min/Max limits (ma) for circuit:				
Test	A	B	C	D	E
I_{IL1}	-0.4/-1.3	-0.4/-1.3	-0.3/-1.3	-0.7/-1.6	-0.7/-1.6
I_{IL2}	-1.4/-3.2	-0.7/-3.2	-0.7/-3.2	-0.7/-3.2	-0.7/-3.2
I_{IL3}	-1.4/-4.8	-0.7/-4.8	-0.7/-4.8	-1.4/-6.4	-1.4/-6.4

TABLE III. Group A inspection for device type 02.
Terminal conditions 13/

Subgroup	Symbol	MIL-STD-883 method	Case A,B,D	1	2	3	4	5	6	7	8	9	10	11	12	13	14	Meas. terminal	Test limits		
			Case C	1	2	3	4	5	6	7	8	9	10	11	12	13	14		Min	Max	Unit
			Test No.	In B	$R_0(1)$	$R_0(2)$	NC	V_{CC}	NC	NC	QC	QB	GND	QD	QA	NC	In A				
1	V_{OL}	3007	1	GND	2.0 V	2.0 V		4.5 V							16 mA		2.0 V	QA		0.4	V
T_C = 25°C	"	"	2	2.0 V	"	"		"				16 mA	"				GND	QB		"	"
	"	"	3	2.0 V	"	"		"			16 mA	GND	"				GND	QC		"	"
	"	"	4	2.0 V	"	"		"					"	16 mA			GND	QD		"	"
	V_{OH}	3006	5	GND	1/	1/		"					"		-400 μA		1/ 6/	QA	2.4		V
	"	"	6	1/ 6/	"	"		"				-400 μA	"				GND	QB	"		"
	"	"	7	1/ 7/	"	"		"			-400 μA		"				GND	QC	"		"
	"	"	8	1/ 8/	"	"		"					"	-400 μA			GND	QD	"		"
	I_{OS}	3011	9	GND	2/	2/		5.5 V					"		GND		2/ 6/	QA	-20	-57	mA
	"	"	10	2/ 6/	"	"		"				GND	"				GND	QB	"	"	"
	"	"	11	2/ 7/	"	"		"			GND		"				GND	QC	"	"	"
	"	"	12	2/ 8/	"	"		"					"	GND			GND	QD	"	"	"
	I_{IH1}	3010	13		2.4 V	GND		"					"					$R_0(1)$			μA
	I_{IH1}	"	14		GND	2.4 V		"					"					$R_0(2)$			"
	I_{IH2}	"	15		5.5 V	GND		"					"					$R_0(1)$	40		"
	I_{IH2}	"	16		GND	5.5 V		"					"					$R_0(2)$	40		"
	I_{IH7}	"	17		5.5 V	"		"					"				2.4 V	In A	100	80	"
	I_{IH7}	"	18	2.4 V	"	"		"					"					In B	100	80	"
	I_{IH8}	"	19		"	"		"					"				5.5 V	In A		200	"
	I_{IH8}	"	20	5.5 V	"	"		"					"					In B		200	"
	I_{IL1}	3009	21		0.4 V	4.5 V		"					"					$R_0(1)$	14/	14/	mA
	I_{IL1}	"	22		4.5 V	0.4 V		"					"					$R_0(2)$	"	"	"
	I_{IL2}	"	23		2/	2/		"					"				0.4 V	In A	"	"	"
	I_{IL3}	"	24	0.4 V	2/	2/		"					"					In B	"	"	"
	I_{CC}	3005	25	GND	2/	2/		"					"				GND	V_{CC}		44	"
	V_{IC}		26					4.5 V					"				-12mA	In A		-1.5	V
	"		27	-12 mA				"					"					In B		"	"
	"		28		-12 mA			"					"					$R_0(1)$			"
	"		29			-12 mA		"					"					$R_0(2)$			"
2	Same tests, terminal conditions and limits as for subgroup 1, except T_C = 125°C and V_{IC} tests are omitted.																		"		
3	Same tests, terminal conditions and limits as for subgroup 1, except T_C = -55°C and V_{IC} tests are omitted.																		"		

See footnotes at end of device type 02.

TABLE III. Group A inspection for device type 02 – Continued.
Terminal conditions 13/

Subgroup	Symbol	MIL-STD-883 method	Case A,B,D	1	2	3	4	5	6	7	8	9	10	11	12	13	14	Meas. terminal	Test limits		
			Case C	1	2	3	4	5	6	7	8	9	10	11	12	13	14		Min	Max	Unit
			Test No.	In B	$R_0(1)$	$R_0(2)$	NC	V_{CC}	NC	NC	QC	QB	GND	QD	QA	NC	In A				
7	Func-	3014	30	B 5/	A 5/	A 5/		4.5 V			L	L	GND	L	L		B 5/				
T_C = 25°C	tional	"	31	A	"	"		"			"	"	"	"	"		"				
	tests 4/	"	32	B	"	"		"			"	"	"	"	"		"				
	"	"	33	B	"	B		"			"	"	"	"	"		"				
	"	"	34	A	"	"		"			"	"	"	"	"		"				
	"	"	35	B	"	"		"			"	H	"	"	"		"				
	"	"	36	B	"	A		"			"	L	"	"	"		"				
	"	"	37	B	B	"		"			"	"	"	"	"		"				
	"	"	38	A	"	"		"			"	"	"	"	"		"				
		"	39	A	"	B		"			"	"	"	"	"		"				
	"	"	40	B	"	B		"			"	H	"	"	"		"				
	"	"	41	A	B	B		"			"	H	"	"	"		"				
	"	"	42	B	"	"		"			H	L	"	"	"		"				
"	"	"	43	A	"	"		"			"	L	"	"	"		"				
	"	"	44	B	"	"		"			"	H	"	"	"		"				
	"	"	45	A	"	"		"			"	H	"	"	"		"				
	"	"	46	B	"	"		"			L	L	"	H	"		"				
	"	"	47	A	"	"		"			"	L	"	"	"		"				
	"	"	48	B	"	"		"			"	H	"	"	"		"				
	"	"	49	A	"	"		"			"	H	"	"	"		"				
	"	"	50	B	"	"		"			H	L	"	"	"		"			See 3/	
	"	"	51	A	"	"		"			"	L	"	"	"		"				
	"	"	52	B	"	"		"			"	H	"	"	"		"				
	"	"	53	A	"	"		"			"	H	"	"	"		"				
	"	"	54	B	"	"		"			L	L	"	L	"		"				
	"	"	55	A	"	"		"			"	L	"	"	"		"				
	"	"	56	B	"	"		"			"	H	"	"	"		"				
	"	"	57	A	"	"		"			"	H	"	"	"		"				
	"	"	58	B	"	"		"			H	L	"	"	"		"				
	"	"	59	A	"	"		"			"	L	"	"	"		"				
	"	"	60	B	"	"		"			"	H	"	"	"		"				
	"	"	61	A	"	"		"			"	H	"	"	"		"				
	"	"	62	B	"	"		"			L	L	"	H	"		"				
	"	"	63	A	"	"		"			L	L	"	H	"		"				
	"	"	64	B	"	"		"			"	H	"		"		"				
	"	"	65	B	A	"		"			"	"	"	"	"		"				
	"	"	66	A	"	"		"			"	"	"	"	"		"				
	"	"	67	B	"	"		"			H	L	"	"	"		"				
	"	"	68	A	"	"		"			"	L	"	"	"		"				
	"	"	69	B	"	"		"			"	H	"	"	"		"				
	"	"	70	A	"	"		"			"	H	"	"	"		"				
	"	"	71	A	"	A		"			L	L	"	L	"		"				

See footnotes at end of device type 02.

TABLE III. Group A inspection for device type 02 - Continued
Terminal conditions 13/

Subgroup	Symbol	MIL-STD-883 method	Case A, B, D	1	2	3	4	5	6	7	8	9	10	11	12	13	14	Meas. terminal	Test limits		
			Case C	1	2	3	4	5	6	7	8	9	10	11	12	13	14				
			Test No.	In B	R_0(1)	R_0 (2)	NC	V_{CC}	NC	NC	QC	QB	GND	QD	QA	NC	In A		Min	Max	Unit
7	Func-	3014	72	B	A	A		4.5 V			L	L	GND	L	L		B 5/				
T_C = 25°C	tional	"	73	"	B	B		"			"	"	"	"	"		A				
	tests 4/	"	74	"	"	"		"			"	"	"	"	H		B			See 3/	
		"	75	"	"	"		"			"	"	"	"	H		A				
		"	76	"	"	"		"			"	"	"	"	L		B				
8	Repeat subgroup 7 at T_C = 125°C and T_C = -55°C.																				
9	F_{MAX}9/	Fig 6	77		GND	GND		5.0 V			12/	12/	GND		OUT 11/		IN	QA	10		MHz
"																					
T_C = 25°C	t_{PLH2}	"	78	10/	"	"		"			11/	11/	"	OUT 11/	10/ 11/		ÍN	QD	20	135	ns
	t_{PHL2}	"	79	10/	"	"		"			11/	11/	"	OUT 11/	10/ 11/		IN	QD	20	135	ns
10	F_{MAX}9/	Fig 6	80		"	"		"			12/	12/	"		OUT 11/		IN	QA	10		MHz
T_C = 125°C	t_{PLH2}	"	81	10/	"	"		"			11/	11/	"	OUT 11/	10/ 11/		IN	QD	20	135	ns
	t_{PHL2}	"	82	10/	"	"		"			11/	11/	"	OUT 11/	10/ 11/		IN	QD	20	135	ns
11	Same tests, terminal conditions and limits as for subgroup 10, except T_C = -55°C.																				

1/ Momentarily apply 2.4 V, then ground prior to taking measurements to set the device in desired state. Maintain ground for measurement.
2/ Apply 4.5 V pulse, then ground prior to taking measurements to set the device in desired state. Maintain ground for measurement.
3/ Output voltages shall be either:
(a) H = 2.4 volts minimum and L = 0.4 volt maximum when using a high speed checker double comparator, or
(b) H ≥ 1.5 volts and L ≤ 1.5 volts when using a high speed checker single comparator.
4/ Only a summary of attributes data is required.
5/ A ≥ 2.0 V, B ≤ 0.8 V. Input voltages shown are the maximum for V_{IL} and the minimum for V_{IH}.
6/ Input pulse must be applied 1 time after R_0 pulses.
7/ Input pulse must be applied 2 times after R_0 pulses.
8/ Input pulse must be applied 4 times after R_0 pulses.
9/ F_{MAX}, minimum limit specified is the frequency of the input pulse. The output frequency shall be one-half of the input frequency.
10/ Connect terminals together during test.
11/ See test figure 6 for terminal load.
12/ Omit specified loads for this test.
13/ Terminal conditions (pins not designated may be H ≥ 2.0 V, or L ≤ 0.8 V, or open).
14/ The limits shown are as follows:

Test	Min/Max limits (mA) for circuit:				
	A	B	C	D	E
I_{IL1}	-0.4/-1.3	-0.4/-1.3	-0.4/-1.3	-0.7/-1.6	-0.7/-1.6
I_{IL2}	-0.7/-3.2	-0.7/-3.2	-0.7/-3.2	-0.7/-3.2	-0.7/-3.2
I_{IL3}	-0.7/-3.2	-0.7/-3.2	-0.7/-3.2	-0.7/-3.2	-0.7/-3.2

TABLE III. Group A inspection for device type 03.

Subgroup	Symbol	MIL-STD-883 method	Case E,F	1	2	3	4	5	6	7	8	9	10	11	12	13	14	15	16		Test limits		
						DATA INPUTS				Enable			Enable	Output	Output	Output	Output	Carry		Meas.			
			Test No.	Clear	Clock	A	B	C	D	P	GND	Load	T	Q_D	Q_C	Q_B	Q_A	output	V_{CC}	terminal		Max	Unit
1	V_{OH}	3006		4.5 V	1/				2.0 V		GND	GND		-800µA					4.5 V	Q_D	Min 2.4		V
T_C = 25°C	"	"	2	"	"			2.0 V			"	"			-800µA				"	Q_C	"		"
	"	" 1	3	"	"		2.0 V				"	"				-800µA			"	Q_B	"		"
	"	"	4	"	"	2.0 V					"	"					-800µA			Q_A	"		"
	"	"	5	"	"	2.0 V	0.8 V	0.8 V	2.0 V		"	"	2.0 V					-800µA	"	Carry	"		"
	V_{OL}	3007	6	"	"				0.8 V	0.8 V	"	"	0.8 V	16 mA				"	"	Q_D		0.4	"
	"	"	7	"	"			0.8 V			"	"	"		16 mA				"	Q_C			"
	"	"	8	"	"		0.8 V			"	"	"	"			16 mA			"	Q_B			"
	"	"	9	"	"	0.8 V			"	"	"	"	"				16 mA		"	Q_A	"		"
	"	"	10	"						"	"	"	"					16 mA	"	Carry	"		"
	V_{IC}		11			-12mA					"								"	Input A	"		"
	"		12				-12mA				"								"	Input B	"		"
	"		13					-12mA			"								"	Input C	-1.5		"
	"		14						-12mA		"								"	Input D	"		"
	"		15							-12mA	"								"	Enable P	"		"
	"		16								"	-12mA							"	Load	"		"
	"		17								"		-12mA						"	Enable T	"		"
	"		18	-12mA							"								"	Clear	"		"
	"		19		-12mA						"								"	Clock	"		"
	I_{IH9}	3010	20		2.4 V						"								5.5 V	Clock	"	80	µA
	I_{IH9}	"		1/		GND	GND	GND	GND	GND	"	GND	2.4 V						"	Enable T	"		"
	I_{IH10}	"	22		5.5 V						"								"	Clock			"
	I_{IH10}	" 21		1/		GND	GND	GND	GND	GND	"	GND	5.5 V						"	Enable T	80		"
	I_{IH11}	"	24	2.4 V							"								"	Clear	200		"
	"	"	25			2.4 V					"	5.5 V							"	Input A	200		"
	"	" 23	26				2.4 V				"	"							"	Input B	40		"
	"	"	27					2.4 V			"	"							"	Input C	"		"
	"	"	28						2.4 V		"	"							"	Input D	"		"
	"	"	29							2.4 V	"		GND						"	Enable P	"		"
	"	"	30								"	2.4 V							"	Load	"		"
	I_{IH12}	"	31	5.5 V							"								"	Clear	"		"
	"	"	32			5.5 V					"	5.5 V							"	Input A	"		"
	"	"	33				5.5 V				"	"							"	Input B	100		"
	"	"	34					5.5 V			"	"							"	Input C	"		"
	"	"	35						5.5 V		"	"							"	Input D	"		"
	"	"	36							5.5 V	"		GND						"	Enable P	"		"
	"	"	37								"	5.5 V							"	Load	"		"
	I_{IL5}	3009	38		0.4 V						"								"	Clock	-1.0	-2.3	mA
																					"		

See footnotes at end of device type 03.

TABLE III. Group A inspection for device type 03 – Continued

Terminal conditions 2/

Subgroup	Symbol	MIL-STD-883 method	Case E, F Test No.	1 Clear	2 Clock	3 DATA INPUTS A	4 DATA INPUTS B	5 DATA INPUTS C	6 DATA INPUTS D	7 Enable P	8 GND	9 Load	10 Enable T	11 Output Q_D	12 Output Q_C	13 Output Q_B	14 Output Q_A	15 Carry output	16 V_{CC}	Meas. terminal	Test limits Min	Test limits Max	Test limits Unit
1	I_{IL6}	3009	39			0.4 V					GND	GND							5.5 V	Input A	-0.4	-1.3	mA
T_C =25°C	"	"	40				0.4 V				"	"							"	Input B	"	"	"
	"	"	41					0.4 V			"	"							"	Input C	"	"	"
	"	"	42						0.4 V		"	"							"	Input D	"	"	"
	I_{IL7}	"	43							0.4 V	"		4.5 V						"	Enable P	-0.7 9/	-1.6	"
	"	"	44								"	0.4 V							"	Load	-0.5	"	"
	"	"	45	0.4 V							"								"	Clear	-0.7 9/	"	
	I_{IL8}	"	46	5.5 V	1/	5.5 V			5.5 V	5.5 V	"	GND	0.4 V						"	Enable T	-1.0	-3.2 "	"
	I_{OS}	3011	47	4.5 V	1/				4.5 V		"	GND		GND					"	Q_D	-20	-57	"
	"	"	48	"	"			4.5 V			"	"			GND				"	Q_C	"	"	"
	"	"	49	"	"		4.5 V				"	"				GND			"	Q_B	"	"	"
	"	"	50	"	"	4.5 V					"	"					GND		"	Q_A	"	"	"
	"	"	51	"	"	4.5 V	GND	GND	4.5 V		"	"	4.5 V					GND	"	Carry	"	"	"
	I_{CCH}	3005	52	5.5 V	5.5 V	5.5 V	5.5 V	5.5 V	5.5 V	5.5 V	"	5.5 V	5.5 V						"	V_{CC}		85	"
	I_{CCH}	"	53	5.5 V	5.5 V	5.5 V	5.5 V	5.5 V	5.5 V	5.5 V	"	GND	5.5 V						"	"		85	"
	I_{CCL}	"	54	GND	5.5 V	GND	GND	GND	GND	GND	"	GND	GND						"	"		91	"
	I_{CCL}	"	55	GND	GND	GND	GND	GND	GND	GND	"	GND	GND						"	"		91	"
2	Same tests, terminal conditions and limits as subgroup 1, except T_C = 125°C and V_{IC} tests are omitted.																						
3	Same tests, terminal conditions and limits as subgroup 1, except T_C = -55°C and V_{IC} tests are omitted.																						
7	Func-	3014	56	B 5/	A 5/	A 5/	A 5/	A 5/	A 5/	A 5/	GND	A 5/	A 5/	L	L	L	L	L	4.5 V			See	3/
T_C =25°C	tional	"	57	A	A	B	B	B	B	"	"	"	B	"	"	"	L	"	"				
"	tests 4/	"	58	"	B	A	A	A	A	"	"	"	A	"	"	"	L	"	"				
"	"	"	59	"	A	A	A	A	A	"	"	"	A	"	"	"	H	"	"				
"	"	"	60	"	A	B	B	B	B	"	"	"	B	"	"	"	H	"	"				
"	"	"	61	"	B	A	A	A	A	"	"	"	A	"	"	"	H	"	"				
"	"	"	62	"	A	A	A	A	A	"	"	"	A	"	"	H	L	"	"				
"	"	"	63	"	A	B	B	B	B	"	"	"	B	"	"	"	L	"	"				
"	"	"	64	"	B	A	A	A	A	"	"	"	A	"	"	"	L	"	"				
"	"	"	65	"	A	A	A	A	A	"	"	"	A	"	"	"	H	"	"				
"	"	"	66	"	A	B	B	B	B	"	"	"	B	"	"	"	H	"	"				
"	"	"	67	"	B	A	A	A	A	"	"	"	A	"	"	"	H	"	"				
"	"	"	68	"	A	A	A	A	A	"	"	"	A	"	H	L	L	"	"				
"	"	"	69	"	A	B	B	B	B	"	"	"	B	"	"	"	L	"	"				
"	"	"	70	"	B	A	A	A	A	"	"	"	A	"	"	"	L	"	"				
"	"	"	71	"	A	A	A	A	A	"	"	"	A	"	"	"	H	"	"				
"	"	"	72	"	A	B	B	B	B	"	"	"	B	"	"	"	H	"	"				
"	"	"	73	"	B	A	A	A	A	"	"	"	A	"	"	"	H	"	"				
"	"	"	74	"	A	A	A	A	A	"	"	"	A	"	"	H	L	"	"				
"	"	"	75	"	A	B	B	B	B	"	"	"	B	"	"	"	L	"	"				
"	"	"	76	"	B	A	A	A	A	"	"	"	A	"	"	"	L	"	"				
"	"	"	77	"	A	A	A	A	A	"	"	"	A	"	"	"	H	"	"				

See footnotes at end of device type 03.

TABLE III. Group A inspection for device type 03 – Continued.
Terminal conditions 2/

Subgroup	Symbol	MIL-STD-883 method	Case E, F	1	2	3	4	5	6	7	8	9	10	11	12	13	14	15	16	Meas. terminal	Test limits		
						DATA INPUTS				Enable			Enable	Output	Output	Output	Output	Carry					
			Test No.	Clear	Clock	A	B	C	D	P	GND	Load	T	Q_D	Q_C	Q_B	Q_A	output	V_{CC}		Min	Max	Unit
7	Func-	3014	78	A 5/	A 5/	B 5/	B 5/	B 5/	B 5/	A 5/	GND	A 5/	B	L	H	H	H	L	4.5 V				
T_C =25°C	tional	"	79	"	B	A	A	A	A	"	"	"	A	"	"	"	H	"	"				
	4/	"	80	"	A	A	A	A	A	"	"	"	A	H	L	L	L	"	"				
	"	"	81	"	A	B	B	B	B	"	"	"	B	"	"	"	L	"	"				
tests	"	"	82	"	B	A	A	A	A	"	"	"	A	"	"	"	L	"	"				
	"	"	83	"	A	A	A	A	A	"	"	"	A	"	"	"	H	H	"				
	"	"	84	"	A	B	B	B	B	"	"	"	B	"	"	"	H	L	"				
	"	"	85	"	B	A	A	A	A	"	"	"	A	"	"	"	H	H	"				
	"	"	86	"	A	"	"	"	"	"	"	"	"	L	"	"	L	L	"				
	"	"	87	B	A	"	"	"	"	"	"	"	"	"	"	"	"	"	"				
	"	"	88	A	A	"	"	"	"	B	"	"	"	"	"	"	"	"	"				
	"	"	89	"	B	"	"	"	"	B	"	"	"	"	"	"	"	"	"				
	"	"	90	"	A	"	"	"	"	B	"	"	"	"	"	"	"	"	"				
	"	"	91	"	A	B	B	B	B	A	"	"	B	"	"	"	"	"	"				
	"	"	92	"	A	A	A	A	A	"	"	"	"	"	"	"	"	"	"				
	"	"	93	"	B	"	A	A	A	"	"	"	"	"	"	"	"	"	"				
	"	"	94	"	A	"	A	A	A	"	"	"	"	"	"	"	"	"	"				
	"	"	95	"	A	"	B	B	B	"	"	B	"	"	"	"	"	"	"				
	"	"	96	"	B	"	B	B	"	"	"	"	"	"	"	"	"	"	"				
	"	"	97	"	A	"	B	B	"	"	"	"	"	"	"	"	H	"	"			See 3/	
	"	"	98	"	A	"	A	A	"	"	"	"	"	"	"	"	"	"	"				
	"	"	99	"	B	"	"	"	"	"	"	"	"	"	"	"	"	"	"				
	"	"	100	"	A	"	"	"	"	"	"	"	"	"	H	H	"	"	"				
	"	"	101	"	A	"	"	"	"	"	"	A	"	"	"	"	"	"	"				
	"	"	102	"	B	"	"	"	"	"	"	A	"	"	"	"	"	"	"				
	"	"	103	"	A	"	"	"	"	"	"	A	"	"	"	"	"	"	"				
	"	"	104	"	A	"	B	B	A	"	"	B	"	"	"	"	"	"	"				
	"	"	105	"	B	"	"	"	"	"	"	B	"	"	"	"	"	"	"				
	"	"	106	"	A	"	"	"	"	"	"	B	"	H	L	L	"	"	"				
	"	"	107	"	A	"	"	"	"	"	"	A	"	"	"	"	"	"	"				
	"	"	108	"	B	"	"	"	"	"	"	A	"	"	"	"	"	"	"				
	"	"	109	"	A	"	"	"	"	"	"	A	"	"	"	"	"	"	"				
	"	"	110	B	A	"	A	A	"	"	"	B	A	L	"	"	L	"	"				
	"	"	111	A	A	"	"	"	"	"	"	"	"	L	"	"	L	"	"				
	"	"	112	A	B	"	"	"	"	"	"	"	"	L	"	"	L	"	"				
	"	"	113	A	A	"	"	"	"	"	"	"	"	H	H	H	H	X	"				
	"	"	114	B	A	"	"	"	"	"	"	A	"	L	L	L	L	L	"				
	"	"	115	A	A	"	B	B	B	B	"	B	B	"	"	"	L	"	"				
	"	"	116	"	B	"	"	"	B	B	"	"	B	"	"	"	L	"	"				
	"	"	117	"	A	"	"	"	B	B	"	"	B	"	"	"	H	"	"				
	"	"	118	"	A	B	"	"	A	A	"	"	A	"	"	"	H	"	"				
	"	"	119	"	B	"	"	"	A	A	"	"	"	"	"	"	H	"	"				

See footnotes at end of device type 03.

TABLE III. Group A inspection for device type 03 – Continued.

Terminal conditions 2/

Subgroup	Symbol	MIL-STD-883 method	Case E, F	1	2	3	4	5	6	7	8	9	10	11	12	13	14	15	16	Meas. terminal	Test limits		
						DATA INPUTS																	
			Test No.	Clear	Clock	A	B	C	D	Enable P	GND	Load	Enable T	Output Q_D	Output Q_C	Output Q_B	Output Q_A	Carry output	V_{CC}		Min	Max	Unit
7	Func-	3014	120	A 5/	A 5/	B 5/	B 5/	B 5/	A 5/	A 5/	GND	B 5/	A 5/	H	L	L	L	L	4.5 V				
T_C =25°C	tional	"	121	"	A	"	A	"	B	B	"	"	"	H	"	"	"	"	"				
	tests 4/	"	122	"	B	"	A	"	B	"	"	"	"	H	"	"	"	"	"				
	"	"	123	"	A	"	A	"	B	"	"	"	"	L	"	H	"	"	"				
	"	"	124	"	A	"	B	A	A	"	"	"	"	L	"	H	"	"	"				
	"	"	125	"	B	"	B	"	"	"	"	"	"	L	"	H	"	"	"				
	"	"	126	"	A	"	B	"	"	"	"	B	"	H	H	L	"	"	"				
	"	"	127	"	A	"	A	"	"	"	"	B	B	"	"	L	"	"	"				
	"	"	128	"	B	"	"	"	"	"	"	"	B	"	"	L	"	"	"				
	"	"	129	"	A	"	"	"	"	"	"	"	B	"	"	H	"	"	"				
	"	"	130	"	A	A	B	B	"	A	"	"	A	"	"	H	"	"	"				
	"	"	131	"	B	"	B	B	"	A	"	"	A	"	"	H	"	"	"				
	"	"	132	"	A	"	B	B	"	A	"	"	A	"	L	L	H	H	"				
	"	"	133	"	A	"	A	A	B	B	"	"	B	"	L	L	"	L	"				
	"	"	134	"	B	"	"	A	B	B	"	"	"	"	L	L	"	"	"				
	"	"	135	"	A	"	"	A	B	B	"	"	"	L	H	H	"	"	"			See 3/	
	"	"	136	"	A	B	"	B	A	A	"	"	"	L	H	"	"	"	"				
	"	"	137	"	B	B	"	"	A	"	"	"	"	L	H	"	"	"	"				
	"	"	138	"	A	B	"	"	A	"	"	"	"	H	L	"	L	"	"				
	"	"	139	"	A	A	"	"	B	"	"	"	A	H	"	"	L	"	"				
	"	"	140	"	B	A	"	"	"	"	"	"	"	H	"	"	L	"	"				
	"	"	141	"	A	A	"	"	"	"	"	"	"	L	"	"	H	"	"				
	"	"	142	"	A	B	B	A	"	"	"	"	"	"	"	"	H	"	"				
	"	"	143	"	B	B	"	"	"	"	"	"	"	"	"	"	H	"	"				
	"	"	144	"	A	B	"	"	"	"	"	"	"	"	H	L	L	"	"				
	"	"	145	"	A	A	"	"	"	"	"	"	"	"	"	"	L	"	"				
	"	"	146	"	B	A	"	"	"	"	"	"	"	"	"	"	L	"	"				
	"	"	147	"	A	A	"	"	"	"	"	"	"	"	"	"	H	"	"				
	"	"	148	"	A	B	A	"	"	"	"	"	"	"	"	"	H	"	"				
	"	"	149	"	B	B	A	"	"	"	"	"	"	"	"	"	H	"	"				
	"	"	150	"	A	B	A	"	"	"	"	"	"	"	"	H	L	"	"				
8	Repeat subgroup 7 at T_C = 125°C and T_C = -55°C.																						
9	F_{MAX} 6/	Fig 7&7C	151	4.5 V	IN					4.5 V	GND	4.5 V	4.5 V				OUT		5.0 V	Q_A	20		MHz
T_C =25°C	tPLH3	Fig 7&7B	152	"	"	GND	GND	GND	4.5 V	"	"	IN	"					OUT	"	Carry	3	45	ns
	tPHL3	"	153	"	"	4.5 V	GND	"	4.5 V	"	"	"	"					OUT	"	Carry	"	45	"
	tPHL4	"	154	"	"	"	GND	"	GND	"	"	"	"				OUT		"	Q_A	"	30	"
	tPHL4	"	155	"	"	"	4.5 V	"	"	"	"	"	"			OUT			"	Q_B	"	"	"
	tPHL4	"	156	"	"	"	4.5 V	4.5 V	"	"	"	"	"		OUT				"	Q_C	"	"	"
	tPHL4	"	157	"	"	"	GND	GND	4.5 V	"	"	4.5 V	"	OUT					"	Q_D	"	"	"
	tPLH4	"	158	8/	"	"				"	"	IN	"				OUT		"	Q_A	"	28	"
	tPLH4	"	159	4.5 V	"	4.5 V	GND	GND	GND	"	"	"	"			OUT			"	Q_B	"	"	"
	tPLH4	"	160	"	"	"	4.5 V	GND	"	"	"	"	"		OUT				"	Q_C	"	"	"
	tPLH4	"	161	"	"	"	4.5 V	4.5 V	"	"	"	"	"	OUT					"	Q_D	"	"	"

See footnotes at end of device type 03.

TABLE III. Group A inspection for device type 03 – Continued.

Terminal conditions 2/

Subgroup	Symbol	MIL-STD-883 method	Case E, F	1	2	3	4	5	6	7	8	9	10	11	12	13	14	15	16	Meas. terminal	Test limits		
						DATA INPUTS																	
			Test No.	Clear	Clock	A	B	C	D	Enable P	GND	Load	Enable T	Output Q_D	Output Q_C	Output Q_B	Output Q_A	Carry output	V_{CC}		Min	Max	Unit
9	t_{PLH4}	Fig 7	162	8/	IN	IN	4.5 V	4.5 V	4.5 V	4.5 V	GND	GND	4.5 V				OUT		5.0 V	Q_A	3	28	ns
T_C =25°C	t_{PLH4}	and 7A	163	"	"	4.5 V	IN	4.5 V	"	"	"	"	"			OUT			"	Q_B	"	"	"
	t_{PLH4}	"	164	"	"	"	4.5 V	IN	"	"	"	"	"		OUT				"	Q_C	"	"	"
	t_{PLH4}	"	165	"	"	"	4.5 V	4.5 V	IN	"	"	"	"	OUT					"	Q_D	"	"	"
	t_{PLH5}	"	166	4.5 V	7/	"	GND	GND	4.5 V	"	"	"	IN					OUT	"	Carry	"	18	"
	t_{PHL5}	"	167	4.5 V	7/	"	GND	GND	"	"	"	"	IN					OUT	"	Carry	"	21	"
	t_{PHL6}	"	168	IN	IN	"	4.5 V	4.5 V	"	"	"	"	4.5 V				OUT		"	Q_A	"	39	"
	t_{PHL6}	"	169	"	"	"	"	"	"	"	"	"	"			OUT				"	Q_B	"	"	"
	t_{PHL6}	"	170	"	"	"	"	"	"	"	"	"	"		OUT					"	Q_C	"	"	"
	t_{PHL6}	"	171	"	"	"	"	"	"	"	"	"	"	OUT					"	Q_D	"	"	"
10	F_{MAX} 6/	Fig 7&7C	172	4.5 V	IN					4.5 V	"	4.5 V	4.5 V				OUT		"	Q_A	20		MHz
T_C =125°C	t_{PLH3}	Fig 7&7B	173	"	"	GND	GND	GND	4.5 V	"	"	IN	"					OUT	"	Carry	3	58	ns
	t_{PHL3}	"	174	"	"	4.5 V	"	"	4.5 V	"	"	"	"					OUT	"	Carry	"	58	"
	t_{PHL4}	"	175	"	"	"	"	"	GND	"	"	"	"				OUT		"	Q_A	"	**38**	"
	t_{PHL4}	"	176	"	"		4.5 V	"		"	"	"	"			OUT			"	Q_B	"	"	"
	t_{PHL4}	"	177	"	"	"	4.5 V	4.5 V	"	"	"	"	"		OUT				"	Q_C	"	"	"
	t_{PHL4}	"		"	"	"	GND	GND	4.5 V	"	"	"	"	OUT					"	Q_D	"	"	"
	t_{PHL4}	"		8/						"	"	4.5 V	"				OUT		"	Q_A	"	36	"
	t_{PHL4}		180	4.5 V	"	4.5 V	GND	GND	GND	"	"	IN	"			OUT			"	Q_B	"	"	"
	t_{PHL4}	178		" "	"		4.5 V	GND	"	"	"	"	"		OUT				"	Q_C	"	"	"
	t_{PHL4}	"179	182	"	"		4.5 V	4.5 V	"	"	"	"	"	OUT					"	Q_D	"	"	"
	t_{PHL4}	Fig 7	183	8/	"	IN	4.5 V	4.5 V	4.5 V	"	"	GND	"				OUT		"	Q_A	"	"	"
	t_{PHL4}	181 and 7A	184	"	"	4.5 V	IN	4.5 V	4.5 V	"	"	"	"			OUT			"	Q_B	"	"	"
	t_{PHL4}	"	185	"	"	"	4.5 V	IN	4.5 V	"	"	"	"		OUT				"	Q_C	"	"	"
	t_{PHL4}	"	186	"	"	"	4.5 V	4.5 V	IN	"	"	"	"	OUT					"	Q_D	"	"	"
	t_{PHL5}	"	187	4.5 V	7/	"	GND	GND	4.5 V	"	"	"	IN					OUT	"	Carry	"	27	"
	t_{PHL5}	"	188	4.5 V	7/	"	GND	GND	"	"	"	"	IN					OUT	"	Carry	"	27	"
	t_{PHL6}	"	189	IN	IN	"	4.5 V	4.5 V	"	"	"	"	4.5 V				OUT		"	Q_A	"	47	"
	t_{PHL6}	"	190	"	"	"	"	"	"	"	"	"	"			OUT				"	Q_B	"	"	"
	t_{PHL6}		191	"	"	"	"	"	"	"	"	"	"		OUT					"	Q_C	"	"	"
	t_{PHL6}	"	192	"	"	"	"	"	"	"	"	"	"	OUT					"	Q_D	"	"	"
11	Same tests, terminal conditions and limits as subgroup 10, except T_C = -55°C.																						

See footnotes on next page.

TABLE III. Group A inspection for device type 03 – Continued.
Terminal conditions 2/

1/ Normal clock pulse: ($V_{IL} \leq 0.8$ V, $V_{IH} \geq 2.0$ V).
2/ Terminal conditions (pins not designated may be H $\geq$ 2.0 V, or L $\leq$ 0.8 V, or open).
3/ Output voltages shall be either:
(a) H = 2.4 volts minimum and L = 0.4 volt maximum when using a high speed checker double comparator, or
(b) H $\geq$ 1.5 volts and L $\leq$ 1.5 volts when using a high speed checker single comparator.
(c) X = Don't care.
4/ Only a summary of attributes data is required.
5/ A $\geq$ 2.0 V, B $\leq$ 0.8 V. Input voltages shown are the maximum for V_{IL} and the minimum for V_{IH}.
6/ F_{MAX}, minimum limit specified is the frequency of the input pulse. The output frequency shall be one-half of the input frequency.
7/ Apply 1 clock pulse prior to input pulses.
8/ Apply momentary GND, then 4.5 volts prior to input pulses, maintain 4.5 volts during test.
9/ Minimum limit for circuit C shall be -0.5 mA.

TABLE III. Group A inspection for device type 04.
Terminal conditions 2/

Subgroup	Symbol	MIL-STD-883 method	Case E,F Test No.	1 Clear	2 Clock	3 DATA INPUTS A	4 DATA INPUTS B	5 DATA INPUTS C	6 DATA INPUTS D	7 Enable P	8 GND	9 Load	10 Enable T	11 Output Q_D	12 Output Q_C	13 Output B	14 Output A	15 Carry output	16 V_{CC}	Meas. terminal	Test limits Min	Test limits Max	Test limits Unit
1	V_{OH}	3006	1	4.5 V	1/				2.0 V		GND	GND		-800 µA					4.5 V	Q_D	2.4		V
T_C = 25°C	"	"	2	"	"			2.0 V			"	"			-800 µA	Q			"	Q_C	"		"
	"	"	3	"	"		2.0 V				"	"				-800 µA			"	Q_B	"		"
	"	"	4	"	"	2.0 V					"	"					-800 µA			Q_A	"		"
	"	"	5	"	"	2.0 V	2.0 V	2.0 V	2.0 V		"	"	2.0 V					-800 µA	"	Carry	"		"
	V_{OL}	3007	6	"	"				0.8 V	0.8 V	"	"	0.8 V	16 mA				"	"	Q_D		0.4	"
	"	"	7	"	"			0.8 V		"	"	"	"		16 mA				"	Q_C		"	"
	"	"	8	"	"		0.8 V			"	"	"	"			16 mA			"	Q_B		"	"
	"	"	9	"	"	0.8 V				"	"	"	"				16 mA		"	Q_A		"	"
	"	"	10	"	"					"	"	"	"					16 mA	"	Carry		"	"
	V_{IC}		11			-12 mA					"								"	Input A		-1.5	"
	"		12				-12 mA				"								"	Input B		"	"
	"		13					-12 mA			"								"	Input C		"	"
	"		14						-12 mA		"								"	Input D		"	"
	"		15							-12 mA	"								"	Enable P		"	"
	"		16								"	-12 mA							"	Load		"	"
	"		17								"		-12 mA						"	Enable T		"	"
	"		18	-12 mA							"								"	Clear		"	"
	"		19		-12 mA						"								"	Clock		"	"
	I_{IH9}	3010	20		2.4 V						"								5.5 V	Clock		80	µA
	I_{IH9}	"	21	1/		GND	GND	GND	GND	GND	"	GND	2.4 V						"	Enable T		80	"
	I_{IH10}	"	22		5.5 V						"								"	Clock		200	"
	I_{IH10}	"	23	1/		GND	GND	GND	GND	GND	"	GND	5.5 V						"	Enable T		200	"
	I_{IH11}	"	24	2.4 V							"								"	Clear		40	"
	"	"	25			2.4 V					"	5.5 V							"	Input A		'	"
	"	"	26				2.4 V				"	"							"	Input B		"	"
	"	"	27					2.4 V			"	"							"	Input C		"	"
	"	"	28						2.4 V		"	"							"	Input D		"	"
	"	"	29							2.4 V	"	"	GND						"	Enable P		"	"
	"	"	30								"	2.4 V							"	Load		"	"
	I_{IH12}	"	31	5.5 V							"								"	Clear		100	"
	"	"	32			5.5 V					"	5.5 V							"	Input A		"	"
	"	"	33				5.5 V				"	"							"	Input B		"	"
	"	"	34					5.5 V			"	"							"	Input C		"	"
	"	"	35						5.5 V		"	"							"	Input D		"	"
	"	"	36							5.5 V	"	"	GND						"	Enable P		"	"
	"	"	37								"	5.5 V							"	Load		"	"
	I_{IL5}	3009	38		0.4 V						"								"	Clock	-1.0	-2.3	mA

See footnotes at end of device type 04.

TABLE III. Group A inspection for device type 04 – Continued.
Terminal conditions 2/

Subgroup	Symbol	MIL-STD-883 method	Case E,F Test No.	1 Clear	2 Clock	3 A	4 B	5 C	6 D	7 P	8 GND	9 Load	10 T	11 Q_D	12 Q_C	13 B	14 A	15 Carry output	16 V_{CC}	Meas. terminal	Test limits Min	Max	Unit
						DATA INPUTS				Enable			Enable	Output	Output	Output	Output	Carry					
1	I_{IL6}	3009	39			0.4 V					GND	GND							5.5 V	Input A	-0.4	-1.3	mA
T_C = 25°C	"	"	40				0.4 V				"	"			Q	Q			"	Input B	"	"	"
	"	"	41					0.4 V			"	"							"	Input C	"	"	"
	"	"	42						0.4 V		"	"							"	Input D	"	"	"
	I_{IL7}	"	43							0.4 V	"		4.5 V						"	Enable P	-0.7 9/	-1.6	
	I_{IL7}	"	44								"	0.4 V							"	Load	-0.5	-1.6	"
	I_{IL7}	"	45	0.4 V							"								"	Clear	-0.7 9/	-1.6	
	I_{IL8}	"		4.5 V	1/	4.5 V	4.5 V	4.5 V	4.5 V	4.5 V	"	GND	0.4 V						"	Enable T	-1.0	-3.2	"
	I_{OS}	3011	47	4.5 V	1/				4.5 V		"	GND	GND	GND					"	Q_D	-20	-57	mA
	"	"	48	"	"			4.5 V			"	"			GND				"	Q_C	"	"	"
	"	" 46	49	"	"		4.5 V				"	"				GND			"	Q_B	"	"	"
		"	50	"	"	4.5 V					"	"					GND		"	Q_A	"	"	"
	"	"	51	"	"	4.5 V	4.5 V	4.5 V	4.5 V		"	"	4.5 V					GND	"	Carry	"	"	"
	I_{CCH}	3005	52	5.5 V	5.5 V	5.5 V	5.5 V	5.5 V	5.5 V	5.5 V	"	5.5 V	5.5 V						"	V_{CC}		85	"
"	I_{CCH}	"	53	5.5 V	5.5 V	5.5 V	5.5 V	5.5 V	5.5 V	5.5 V	"	GND	5.5 V						"	"		85	"
	I_{CCL}	"	54	GND	5.5 V	GND	GND	GND	GND	GND	"	GND	GND						"	"		91	"
	I_{CCL}	"	55	GND	GND	GND	GND	GND	GND	GND	"	GND	GND						"	"		91	"
2	Same tests, terminal conditions and limits as subgroup 1, except T_C = 125°C and V_{IC} tests are omitted.																						
3	Same tests, terminal conditions and limits as subgroup 1, except T_C = -55°C and V_{IC} tests are omitted.																						
7	Func-	3014	56	B 5/	B 5/	B 5/	B 5/	B 5/	B 5/	A 5/	GND	B 5/	A 5/	X	X	X	X	X	4.5 V				
T_C = 25°C	tional	"	56A	B	A	B	B	B	B	"	"	"	"	L	L	L	L	L	"				
	tests 4/	"	57	A	B	B	B	B	B	"	"	"	"	"	"	"	"	"	"				
	"	"	58	A	A	B	B	B	B	"	"	"	"	"	"	"	"	"	"				
	"	"	59	B	A	A	A	A	A	"	"	A	"	"	"	"	"	"	"				
	"	"	60	B	B	A	A	A	A	"	"	"	"	"	"	"	"	"	"				
	"	"	61	B	A	A	A	A	A	"	"	"	"	"	"	"	"	"	"				
	"	"	62	A	A	B	B	B	B	"	"	"	B	"	"	"	"	"	"				
	"	"	63	"	B	A	A	A	A	"	"	"	A	"	"	"	"	"	"				
	"	"	64	"	A	A	A	A	A	"	"	"	A	"	"	"	H	"	"				
	"	"	65	"	A	B	B	B	B	"	"	"	B	"	"	"	H	"	"			See 3/	
	"	"	66	"	B	A	A	A	A	"	"	"	A	"	"	"	H	"	"				
	"	"	67	"	A	A	A	A	A	"	"	"	A	"	"	H	L	"	"				
	"	"	68	"	A	B	B	B	B	"	"	"	B	"	"	"	L	"	"				
	"	"	69	"	B	A	A	A	A	"	"	"	A	"	"	"	L	"	"				
	"	"	70	"	A	A	A	A	A	"	"	"	A	"	"	"	H	"	"				
	"	"	71	"	A	B	B	B	B	"	"	"	B	"	"	"	H	"	"				
	"	"	72	"	B	A	A	A	A	"	"	"	A	"	"	"	H	"	"				
	"	"	73	"	A	A	A	A	A	"	"	"	A	"	H	L	L	"	"				
	"	"	74	"	A	B	B	B	B	"	"	"	B	"	"	"	L	"	"				
	"	"	75	"	B	A	A	A	A	"	"	"	A	"	"	"	L	"	"				
	"	"	76	"	A	A	A	A	A	"	"	"	A	"	"	"	H	"	"				

See footnotes at end of device type 04.

TABLE III. Group A inspection for device type 04 – Continued.

Terminal conditions 2/

Subgroup	Symbol	MIL-STD-883 method	Case E,F Test No.	1 Clear	2 Clock	3 A	4 B	5 C	6 D	7 P	8 GND	9 Load	10 T	11 Q_D	12 Q_C	13 B	14 A	15 output	16 V_{CC}	Meas. terminal	Test limits Min	Max	Unit
						DATA INPUTS				Enable			Enable	Output	Output	Output	Output	Carry					
7	Func-	3014	77	A 5/	A 5/	B 5/	B 5/	B 5/	B 5/	A 5/	GND	A 5/	B 5/	L	H	L	H	L	4.5 V				
T_C = 25°C	tional	"	78	"	B	A	A	A	A	"	"	"	A	"	" Q	" Q	H	"	"				
	tests 4/	"	79	"	A	A	A	A	A	"	"	"	A	"	"	H	L	"	"				
	"	"	80	"	A	B	B	B	B	"	"	"	B	"	"	"	L	"	"				
	"	"	81	"	B	A	A	A	A	"	"	"	A	"	"	"	L	"	"				
	"	"	82	"	A	A	A	A	A	"	"	"	A	"	"	"	H	"	"				
	"	"	83	"	A	B	B	B	B	"	"	"	B	"	"	"	H	"	"				
	"	"	84	"	B	A	A	A	A	"	"	"	A	"	"	"	H	"	"				
	"	"	85	"	A	A	A	A	A	"	"	"	A	H	L	L	L	"	"				
	"	"	86	"	A	B	B	B	B	"	"	"	B	"	"	"	L	"	"				
	"	"	87	"	B	A	A	A	A	"	"	"	A	"	"	"	L	"	"				
	"	"	88	"	A	A	A	A	A	"	"	"	A	"	"	"	H	"	"				
	"	"	89	"	A	B	B	B	B	"	"	"	B	"	"	"	H	"	"				
	"	"	90	"	B	A	A	A	A	"	"	"	A	"	"	"	H	"	"				
	"	"	91	"	A	A	A	A	A	"	"	"	A	"	"	"	L	"	"				
	"	"	92	"	A	B	B	B	B	"	"	"	B	"	"	H	L	"	"				
	"	"	93	"	B	A	A	A	A	"	"	"	A	"			L	"	"				
	"	"	94	"	A	A	A	A	A	"	"	"	A	"	"	"	H	"	"				
	"	"	95	"	A	B	B	B	B	"	"	"	B	"	"	"	H	"	"				
	"	"	96	"	B	A	A	A	A	"	"	"	A	"	"	"	H	"	"				
	"	"	97	"	A	A	A	A	A	"	"	"	A	"	H	L	L	"	"				
	"	"	98	"	A	B	B	B	B	"	"	"	B	"	"	"	L	"	"		See 3/		
	"	"	99	"	B	A	A	A	A	"	"	"	A	"	"	"	L	"	"				
	"	"	100	"	A	A	A	A	A	"	"	"	A	"	"	"	H	"	"				
	"	"	101	"	A	B	B	B	B	"	"	"	B	"	"	"	H	"	"				
	"	"	102	"	B	A	A	A	A	"	"	"	A	"	"	"	H	"	"				
	"	"	103	"	A	A	A	A	A	"	"	"	A	"	"	"	L	"	"				
	"	"	104	"	A	B	B	B	B	"	"	"	B	"	"	H	L	"	"				
	"	"	105	"	B	A	A	A	A	"	"	"	A	"	"	"	L	"	"				
	"	"	106	"	A	A	A	A	A	"	"	"	A	"	"	"	H	H	"				
	"	"	107	"	A	B	B	B	B	"	"	"	B	"	"	"	H	L	"				
	"	"	108	"	B	A	A	A	A	"	"	"	A	"	"	"	H	H	"				
	"	"	109	"	A	"	"	"	"	"	"	"	A	L	L	L	L	L	"				
	"	"	110	"	B	"	"	"	"	"	"	"	B	"	"	"	"	"	"				
	"	"	111	"	A	"	"	"	"	"	"	"	"	"	"	"	"	"	"				
	"	"	112	"	B	"	"	"	"	"	"	"	"	"	"	"	"	"	"				
	"	"	113	"	A	"	B	B	B	"	"	A	"	"	"	"	"	"	"				
	"	"	114	"	B	"	"	"	"	"	"	B	"	"	"	"	"	"	"				
	"	"	115	"	A	"	"	"	"	"	"	"	"	"	"	"	"	"	"				
	"	"	116	"	A	"	A	A	"	"	"	"	"	"	"	"	H	"	"				
	"	"	117	"	B	"	"	"	"	"	"	"	"	"	"	"	"	"	"				
	"	"	118	"	A	"	"	"	"	"	"	"	"	"	H	H	"	"	"				
	"	"	119	"	A	"	"	"	"	"	"	A	"	"	"	"	"	"	"				

See footnotes at end of device type 04.

TABLE III. Group A inspection for device type 04 – Continued.

Terminal conditions 2/

Subgroup	Symbol	MIL-STD-883 method	Case E,F Test No.	1 Clear	2 Clock	3 DATA INPUTS A	4 DATA INPUTS B	5 DATA INPUTS C	6 DATA INPUTS D	7 Enable P	8 GND	9 Load	10 Enable T	11 Output Q_D	12 Output Q_C	13 Output B	14 Output A	15 Carry output	16 V_{CC}	Meas. terminal	Test limits		
																						Max	Unit
7	Func-	3014	120	A 5/	B 5/	A 5/	A 5/	A 5/	B 5/	A 5/	GND	A 5/	B 5/	L	H	H	H	L	4.5 V	Min			
T_C = 25°C	tional	"	121	"	A	"	B	B	A	"	"	A	"	"	" Q	" Q	"	"	"				
	tests 4/	"	122	"	B	"	B	B	"	"	"	B	"	"	"	"	"	"	"				
	"	"	123	"	A	"	B	B	"	"	"	"	"	H	L	L	"	"	"				
	"	"	124	"	A	"	A	A	"	"	"	"	A	H	L	L	"	"	"				
	"	"	125	"	B	"	A	A	"	"	"	"	A	H	L	L	"	"	"				
	"	"	126	"	A	A	A	A	"	"	"	"	"	H	H	H	"	H	"				
	"	"	127	"	A	B	"	"	"	"	"	"	"	"	"	"	"	"	"				
	"	"	128	"	B	A	"	"	"	"	"	"	"	"	"	"	"	"	"				
	"	"	129	"	B	A	B	B	B	"	"	"	"	"	"	"	"	"	"				
	"	"	130	"	A	A	B	B	B	"	"	"	"	L	L	L	"	L	"				
	"	"	131	"	"	B	"	B	B	"	"	"	"	"	"	"	"	"	"				
	"	"	132	"	"	A	"	A	A	"	"	"	"	"	"	"	"	"	"				
	"	"	133	"	"	B	"	"	A	"	"	"	"	"	"	"	"	"	"				
	"	"	134	"	"	A	"	"	B	"	"	"	"	"	"	"	"	"	"				
	"	"	135	"	"	B	"	"	"	"	"	"	"	"	"	"	"	"	"				
	"	"	136	"	"	B	A	B	"	"	"	"	"	"	"	"	"	"	"				
	"	"	137	"	"	A	"	"	"	"	"	"	"	"	"	"	"	"	"				
	"	"	138	"	B	"	"	"	"	"	"	"	"	"	"	"	"	"	"				
	"	"	139	"	A	"	"	"	"	"	"	"	"	"	"	H	"	"	"				
	"	"	140	"	A	B	B	A	"	"	"	"	"	"	"	H	"	"	"				
	"	"	141	"	B	B	"	"	"	"	"	"	"	"	"	H	"	"	"			See 3/	
	"	"	142	"	A	B	"	"	"	A	"	"	"	"	H	L	L	"	"				
	"	"	143	"	A	A	"	"	"	"	"	"	"	"	"		L	"	"				
	"	"	144	"	B	A	"	"	"	"	"	"	"	"	"	" "	L	"	"				
	"	"	145	"	A	A	"	"	"	"	"	"	"	"	"	"	H	"	"				
	"	"	146	"	A	B	A	"	"	"	"	"	"	"	"	"	H	"	"				
	"	"	147	"	B	"	A	"	"	"	"	"	"	"	"	"	H	"	"				
	"	"	148	"	A	"	A	"	"	"	"	"	"	"	"	H	L	"	"				
	"	"	149	"	A	"	B	B	A	"	"	"	"	"	"	H	"	"	"				
	"	"	150	"	B	"	B	"	"	"	"	"	"	"	"	H	"	"	"				
	"	"	151	"	A	"	B	"	"	"	"	"	"	H	L	L	"	"	"				
	"	"	152	"	A	"	A	"	"	"	"	"	"	"	"	L	"	"	"				
	"	"	153	"	B	"	"	"	"	"	"	"	"	"	"	L	"	"	"				
	"	"	154	"	A	"	"	"	"	"	"	"	"	"	"	H	"	"	"				
	"	"	155	"	A	A	"	"	"	"	"	"	"	"	"	"	"	"	"				
	"	"	156	"	B	A	"	"	"	"	"	"	"	"	"	"	"	"	"				
	"	"	157	"	A	A	"	"	"	"	"	"	"	"	"	"	H	"	"				
	"	"	158	"	A	B	B	A	"	"	"	"	"	"	"	"	H	"	"				
	"	"	159	"	B	B	"	"	"	"	"	"	"	"	"	"	H	"	"				
	"	"	160	"	A	B	"	"	"	"	"	"	"	"	H	L	L	"	"				
	"	"	161	"	A	A	"	"	"	"	"	"	"	"	"	"	L	"	"				
	"	"	162	"	B	A	"	"	"	"	"	"	"	"	"	"	L	"	"				

See footnotes at end of device type 04.

TABLE III. Group A inspection for device type 04– Continued.

Terminal conditions 2/

Subgroup	Symbol	MIL-STD-883 method	Case E, F Test No.	1 Clear	2 Clock	3 A	4 B	5 C	6 D	7 P	8 GND	9 Load	10 T	11 Q_D	12 Q_C	13 Q_B	14 Q_A	15 output	16 V_{CC}	Meas. terminal	Test limits Min	Max	Unit
						DATA INPUTS				Enable			Enable	Output	Output	Output	Output	Carry					
7	Funct-	3014	163	A	A	A	B	A	A	A	GND	B	A	H	H	L	H	L	4.5 V	}			
T_C = 25°C	tional	"	164	"	A	"	"	"	"	"	"	A	"	"	"	"	H	"	"			See 3/	
	4/	"	165	"	B	"		"	"	"	"	A	"	"		"	H	"	"				
	"	"	166	"	A	"	"	"	"	"	"	A	"	"	"	H	L	"	"				
8 tests	Repeat subgroup 7 at T_C = 125°C and T_C = -55°C.																						
9	F_{MAX} 6/	Fig 7 & 7C	167	4.5 V	IN					4.5 V	GND	4.5 V	4.5 V				OUT		5.0 V	Q_A	20		MHz
T_C = 25°C	t_{PLH3}	Fig 7 & 7B	168	"	"	GND	4.5 V	4.5 V	4.5 V	"	"	IN	"					OUT	"	Carry	3	45	ns
	t_{PHL3}	"	169	"	"	4.5 V	4.5 V	4.5 V	4.5 V	"	"	"	"					OUT	"	Carry	"	45	"
	t_{PHL4}	"	170	"	"	"	GND	GND	GND	"	"	"	"				OUT		"	Q_A	"	30	"
	t_{PHL4}	"	171	"	"	"	4.5 V	GND	"	"	"	"	"			OUT			"	Q_B	"	"	"
	t_{PHL4}	"	172	"	"	"	4.5 V	4.5 V	"	"	"	"	"		OUT				"	Q_C	"	"	"
	t_{PHL4}	"	173	"	"	"	4.5 V	4.5 V	4.5 V	"	"	"	"	OUT					"	Q_D	"	"	"
	t_{PLH4}	"	174	IN	"	"				"	"	4.5 V	"				OUT		"	Q_A	"	28	"
	t_{PLH4}	"	175	4.5 V	"	4.5 V	GND	GND	GND	"	"	IN	"			OUT			"	Q_B	"	"	"
	t_{PLH4}	"	176	4.5 V	"	"	4.5 V	GND	"	"	"	"	"		OUT				"	Q_C	"	"	"
	t_{PLH4}	"	177	4.5 V	"	"	"	4.5 V	"	"	"	"	"	OUT					"	Q_D	"	"	"
	t_{PLH4}	Fig 7 & 7A	178	8/	"	IN	"	"	4.5 V	"	"	GND	"						"	Q_A	"	"	"
	t_{PLH4}	"	179	"	"	4.5 V	IN	"	4.5 V	"	"	"	"				OUT		"	Q_B	"	"	"
	t_{PLH4}	"	180	"	"	"	4.5 V	IN	4.5 V	"	"	"	"			OUT			"	Q_C	"	"	"
	t_{PLH4}	"	181	"	"	"	4.5 V	4.5 V	IN	"	"	"	"		OUT				"	Q_D	"	"	"
	t_{PLH5}	"	182	4.5 V	7/	"	"	"	4.5 V	"	"	"	IN	OUT				OUT	"	Carry	"	18	"
	t_{PHL5}	"	183	4.5 V	7/	"	"	"	"	"	"	"	IN					OUT	"	Carry	"	21	"
	t_{PHL6}	"	184	IN	IN	"	"	"	"	"	"	"	4.5 V				OUT		"	Q_A	"	30	"
	t_{PHL6}	"	185	"	"	"	"	"	"	"	"	"	"			OUT				"	Q_B	"	"	"
	t_{PHL6}	"	186	"	"	"	"	"	"	"	"	"	"		OUT					"	Q_C	"	"	"
	t_{PHL6}	"	187	"	"	"	"	"	"	"	"	"	"	OUT					"	Q_D	"	"	"
10	F_{MAX} 6/	Fig 7 & 7C	188	4.5 V	IN					4.5 V	"	4.5 V	4.5 V				OUT		"	Q_A	20		MHz
T_C =125°C	t_{PLH3}	Fig 7 & 7B	189	"	"	GND	4.5 V	4.5 V	4.5 V	"	"	IN	"					OUT	"	Carry	3	58	ns
	t_{PHL3}	"	190	"	"	4.5 V	4.5 V	4.5 V	4.5 V	"	"	"	"					OUT	"	Carry	"	58	"
	t_{PHL4}	"	191	"	"	"	GND	GND	GND	"	"	"	"				OUT		"	Q_A	"	**38**	"
	t_{PHL4}	"	192	"	"	"	4.5 V	GND	"	"	"	"	"			OUT			"	Q_B	"	"	"
	t_{PHL4}	"	193	"	"	"	"	4.5 V	"	"	"	"	"		OUT				"	Q_C	"	"	"
	t_{PHL4}	"	194	"	"	"	"	4.5 V	4.5 V	"	"	"	"	OUT					"	Q_D	"	"	"
	t_{PLH4}	"	195	IN	"					"	"	4.5 V	"				OUT		"	Q_A	"	36	"
	t_{PLH4}	"	196	4.5 V	"	4.5 V	GND	GND	GND	"	"	IN	"			OUT			"	Q_B	"	"	"
	t_{PLH4}	"	197	"	"	"	4.5 V	GND	"	"	"	"	"		OUT				"	Q_C	"	"	"
	t_{PLH4}	"	198	"	"	"	4.5 V	4.5 V	"	"	"	"	"	OUT					"	Q_D	"	"	"

See footnotes at end of device type 04.

TABLE III. Group A inspection for device type 04– Continued.

Terminal conditions 2/

Subgroup	Symbol	MIL-STD-883 method	Case E, F	1	2	3	4	5	6	7	8	9	10	11	12	13	14	15	16	Meas. terminal	Test limits		
			Test No.	Clear	Clock	DATA INPUTS A	B	C	D	Enable P	GND	Load	Enable T	Output Q_D	Output Q_C	Output Q_B	Output Q_A	Carry output	V_{CC}		Min	Max	Unit
10	t_{PLH4}	Fig 7	199	8/	IN	IN	4.5 V	4.5 V	4.5 V	4.5 V	GND	GND	4.5 V				OUT		5.0 V	Q_A	3	36	ns
T_C =125°C	t_{PLH4}	and 7A	200	"	"	4.5 V	IN	4.5 V	4.5 V	"	"	"	"			OUT			"	Q_B	"	"	"
	t_{PLH4}	"	201	"	"	"	4.5 V	IN	4.5 V	"	"	"	"		OUT				"	Q_C	"	"	"
	t_{PHL4}	"	202	"	"	"		4.5 V	IN	"	"	"		OUT					"	Q_D	"	"	"
	t_{PLH5}	"		4.5 V	7/	"	"	"	4.5 V	"	"	"	IN					OUT	"	Carry		27	"
	t_{PHL5}	"		4.5 V	7/	"	"	"	"	"	"	"	IN					OUT	"	Carry		27	"
	t_{PHL6}	"		IN	IN	"	"	"	"	"	"	"	4.5 V				OUT		"	Q_A	"	38	"
	t_{PHL6}	"203	206	"	"	"		"	"	"	"	"				OUT			"	Q_B	"	"	"
	t_{PHL6}	"204	207	"	"	"		"	"	"	"	"			OUT				"	Q_C	"	"	"
	t_{PHL6}	"205	208	"	"	"		"	"	"	"	"		OUT					"	Q_D	"	"	"
11	Same tests, terminal conditions and limits as subgroup 10, except T_C = -55°C.																						

1/ Normal clock pulse: ($V_{IL} \leq 0.8$ V, $V_{IH} \geq 2.0$ V).

2/ Terminal conditions (pins not designated may be H $\geq$ 2.0 V, or L $\leq$ 0.8 V, or open).

3/ Output voltages shall be either:

(a) H = 2.4 volts minimum and L = 0.4 volt maximum when using a high speed checker double comparator, or

(b) H $\geq$ 1.5 volts and L $\leq$ 1.5 volts when using a high speed checker single comparator.

(c) X = Don't care.

4/ Only a summary of attributes data is required.

5/ A $\geq$ 2.0 V, B $\leq$ 0.8 V. Input voltages shown are the maximum for V_{IL} and the minimum for V_{IH}.

6/ F_{MAX}, minimum limit specified is the frequency of the input pulse. The output frequency shall be one-half of the input frequency.

7/ Apply 1 clock pulse prior to input pulses.

8/ Momentarily ground, then apply 4.5 V.

9/ Minimum limit for circuit C shall be -0.5 mA.

TABLE III. Group A inspection for device type 05.
Terminal conditions 2/

Subgroup	Symbol	MIL-STD-883 method	Case E,F Test No.	1 Clear	2 Clock	3 DATA INPUTS A	4 B	5 C	6 D	7 Enable P	8 GND	9 Load	10 Enable T	11 Output Q_D	12 Output Q_C	13 Output B	14 Output A	15 Carry output	16 V_{CC}	Meas. terminal	Test limits		
																						Max	Unit
1	V_{OH}	3006	1	4.5 V	1/				2.0 V		GND	GND		-800 µA					4.5 V	Q_D	Min 2.4		V
T_C = 25°C	"	"	2	"	"			2.0 V			"	"			-800 µA	Q			"	Q_C	"		"
"	"	"	3	"	"		2.0 V				"	"				-800 µA			"	Q_B	"		"
"	"	"	4	"	"	2.0 V					"	"					-800 µA			Q_A	"		"
"	"	"	5	"	"	2.0 V	0.8 V	0.8 V	2.0 V		"	"	2.0 V					-800 µA	"	Carry	"		"
"	V_{OL}	3007	6	"	"				0.8 V	0.8 V	"	"	0.8 V	16 mA				"	"	Q_D		0.4	"
"	"	"	7	"	"			0.8 V		"	"	"	"		16 mA				"	Q_C		"	"
"	"	"	8	"	"		0.8 V			"	"	"	"			16 mA			"	Q_B		"	"
"	"	"	9	"	"	0.8 V				"	"	"	"				16 mA		"	Q_A		"	"
"	"	"	10	"	"					"	"	"	"					16 mA	"	Carry		"	"
"	V_{IC}		11			-12 mA					"								"	Input A		-1.5	"
"	"		12				-12 mA				"								"	Input B		"	"
"	"		13					-12 mA			"								"	Input C		"	"
"	"		14						-12 mA		"								"	Input D		"	"
"	"		15							-12 mA	"								"	Enable P		"	"
"	"		16								"	-12 mA							"	Load		"	"
"	"		17								"		-12 mA						"	Enable T		"	"
"	"		18	-12 mA							"								"	Clear		"	"
"	"		19		-12 mA						"								"	Clock		"	"
"	I_{IH9}	3010	20		2.4 V						"								5.5 V	Clock		80	µA
"	I_{IH9}	"	21	1/		GND	GND	GND	GND	GND	"	GND	2.4 V						"	Enable T		80	"
"	I_{IH10}	"	22		5.5 V						"								"	Clock		200	"
"	I_{IH10}	"	23	1/		GND	GND	GND	GND	GND	"	GND	5.5 V						"	Enable T		200	"
"	I_{IH11}	"	24	2.4 V							"								"	Clear		40	"
"	"	"	25			2.4 V					"	5.5 V							"	Input A		'	"
"	"	"	26				2.4 V				"	"							"	Input B		"	"
"	"	"	27					2.4 V			"	"							"	Input C		"	"
"	"	"	28						2.4 V		"	"							"	Input D		"	"
"	"	"	29							2.4 V	"	"	GND						"	Enable P		"	"
"	"	"	30								"	2.4 V							"	Load		"	"
"	I_{IH12}	"	31	5.5 V							"								"	Clear		100	"
"	"	"	32			5.5 V					"	5.5 V							"	Input A		"	"
"	"	"	33				5.5 V				"	"							"	Input B		"	"
"	"	"	34					5.5 V			"	"							"	Input C		"	"
"	"	"	35						5.5 V		"	"							"	Input D		"	"
"	"	"	36							5.5 V	"	"	GND						"	Enable P		"	"
"	"	"	37								"	5.5 V							"	Load		"	"
"	I_{IL5}	3009	38		0.4 V						"								"	Clock	-1.0	-2.3	mA

See footnotes at end of device type 05.

TABLE III. Group A inspection for device type 05 – Continued.

Terminal conditions 2/

Subgroup	Symbol	MIL-STD-883 method	Case E,F Test No.	1 Clear	2 Clock	3 A	4 B	5 C	6 D	7 Enable P	8 GND	9 Load	10 Enable T	11 Output Q_D	12 Output Q_C	13 Output B	14 Output A	15 Carry output	16 V_{CC}	Meas. terminal	Test limits		
						DATA INPUTS																Max	Unit
1	I_{IL6}	3009	39			0.4 V					GND	GND							5.5 V	Input A	Min -0.4	-1.3	mA
T_C = 25°C	"	"	40				0.4 V				"	"			Q	Q			"	Input B	"	"	"
	"	"	41					0.4 V			"	"							"	Input C	"	"	"
	"	"	42						0.4 V		"	"							"	Input D	"	"	"
	I_{IL7}	"	43							0.4 V	"		4.5 V						"	Enable P	-0.7 9/	-1.6	"
	I_{IL7}	"	44								"	0.4 V							"	Load	-0.7 9/	-1.6	"
	I_{IL7}	"	45	0.4 V							"								"	Clear	-0.7 9/	-1.6	"
	I_{IL8}	"		4.5 V	1/	4.5 V			4.5 V	4.5 V	"	GND	0.4 V						"	Enable T	-1.0	-3.2	"
	I_{OS}	3011	47	4.5 V	1/				4.5 V		GND	GND	GND	GND					5.5 V	Q_D	-20	-57	"
	"	"	48	"	"			4.5 V			"	"			GND				"	Q_C	"	"	"
	"	"46	49	"	"		4.5 V				"	"				GND			"	Q_B	"	"	"
	"	"	50	"	"	4.5 V					"	"					GND		"	Q_A	"	"	"
	"	"	51	"	"	4.5 V			4.5 V		"	"						GND	"	Carry	"	"	"
	I_{CCH}	3005	52	5.5 V	5.5 V	5.5 V	5.5 V	5.5 V	5.5 V	5.5 V	"	5.5 V	5.5 V						"	V_{CC}		85	"
	I_{CCH}	"	53	5.5 V	5.5 V	5.5 V	5.5 V	5.5 V	5.5 V	5.5 V	"	GND	5.5 V						"	"		85	"
	I_{CCL}	"	54	GND	5.5 V	GND	GND	GND	GND	GND	"	GND	GND						"	"		91	"
	I_{CCL}	"	55	GND	GND	GND	GND	GND	GND	GND	"	GND	GND						"	"		91	"
2	Same tests, terminal conditions and limits as subgroup 1, except T_C = 125°C and V_{IC} tests are omitted.																						
3	Same tests, terminal conditions and limits as subgroup 1, except T_C = -55°C and V_{IC} tests are omitted.																						
7	Func-	3014	56	B 5/	B 5/	B 5/	B 5/	B 5/	B 5/	A 5/	GND	B 5/	A 5/	X	X	X	X	X	4.5 V				
T_C = 25°C	tional	"	56A	B	A	"	"	"	"	"	"	"	"	L	L	L	L	L	"				
	tests 4/	"	57	A	B	"	"	"	"	"	"	"	"	"	"	"	"	"	"				
	"	"	58	A	A	"	"	"	"	"	"	"	"	"	"	"	"	"	"				
	"	"	59	B	A	A	A	A	A	"	"	A	"	"	"	"	"	"	"				
	"	"	60	B	B	A	A	A	A	"	"	"	"	"	"	"	"	"	"				
	"	"	61	B	A	A	A	A	A	"	"	"	"	"	"	"	"	"	"				
	"	"	62	A	A	B	B	B	B	"	"	"	B	"	"	"	"	"	"				
	"	"	63	"	B	A	A	A	A	"	"	"	A	"	"	"	"	"	"				
	"	"	64	"	A	A	A	A	A	"	"	"	A	"	"	"	H	"	"				
	"	"	65	"	A	B	B	B	B	"	"	"	B	"	"	"	H	"	"			See 3/	
	"	"	66	"	B	A	A	A	A	"	"	"	A	"	"	"	H	"	"				
	"	"	67	"	A	A	A	A	A	"	"	"	A	"	"	H	L	"	"				
	"	"	68	"	A	B	B	B	B	"	"	"	B	"	"	"	L	"	"				
	"	"	69	"	B	A	A	A	A	"	"	"	A	"	"	"	L	"	"				
	"	"	70	"	A	A	A	A	A	"	"	"	A	"	"	"	H	"	"				
	"	"	71	"	A	B	B	B	B	"	"	"	B	"	"	"	H	"	"				
	"	"	72	"	B	A	A	A	A	"	"	"	A	"	"	"	H	"	"				
	"	"	73	"	A	A	A	A	A	"	"	"	A	"	H	L	L	"	"				
	"	"	74	"	A	B	B	B	B	"	"	"	B	"	"	"	L	"	"				
	"	"	75	"	B	A	A	A	A	"	"	"	A	"	"	"	L	"	"				
	"	"	76	"	A	A	A	A	A	"	"	"	A	"	"	"	H	"	"				

See footnotes at end of device type 05.

TABLE III. Group A inspection for device type 05 – Continued.
Terminal conditions 2/

Subgroup	Symbol	MIL-STD-883 method	Case E,F Test No.	1 Clear	2 Clock	3 DATA INPUTS A	4 DATA INPUTS B	5 DATA INPUTS C	6 DATA INPUTS D	7 Enable P	8 GND	9 Load	10 Enable T	11 Output Q_D	12 Output Q_C	13 Output B	14 Output A	15 Carry output	16 V_{CC}	Meas. terminal	Test limits		
																						Max	Unit
7	Func-	3014	77	A 5/	A 5/	B 5/	B 5/	B 5/	B 5/	A 5/	GND	A 5/	B 5/	L	H	L	H	L	4.5 V	Min			
T_C = 25°C	tional	"	78	"	B	A	A	A	A	"	"	"	A	"	" Q	" Q	H	"	"				
	tests 4/	"	79	"	A	A	A	A	A	"	"	"	A	"	"	H	L	"	"				
	"	"	80	"	A	B	B	B	B	"	"	"	B	"	"	"	L	"	"				
	"	"	81	"	B	A	A	A	A	"	"	"	A	"	"	"	L	"	"				
	"	"	82	"	A	A	A	A	A	"	"	"	A	"	"	"	H	"	"				
	"	"	83	"	A	B	B	B	B	"	"	"	B	"	"	"	H	"	"				
	"	"	84	"	B	A	A	A	A	"	"	"	A	"	"	"	H	"	"				
	"	"	85	"	A	A	A	A	A	"	"	"	A	H	L	L	L	"	"				
	"	"	86	"	A	B	B	B	B	"	"	"	B	"	"	"	L	"	"				
	"	"	86A	"	B	B	B	B	B	"	"	"	B	"	"	"	L	"	"				
	"	"	87	"	B 5/	A	A	A	A	"	"	"	A	"	"	"	L	"	"				
	"	"	88	"	A	A	A	A	A	"	"	"	A	"	"	"	H	H	"				
	"	"	89	"	A	B	B	B	B	"	"	"	B	"	"	"	H	L	"				
	"	"	90	"	B	A	A	A	A	"	"	"	A	"	"	"	H	H	"				
	"	"	91	"	A	"	"	"	"	"	"	"	"	L	"	"	L	L	"				
	"	"	92	"	A	"	"	"	"	B	"	"	"	"	"	"	"	"	"				
	"	"	93	"	B	"	"	"	"	B	"	"	"	"			"	"	"				
	"	"	94	"	A	"	"	"	"	A	"	"	B	"	" "	" "	"	"	"				
	"	"	95	"	B	"	"	"	"	"	"	"	"	"	"	"	"	"	"				
	"	"	96	"	A	"	B	B	B	"	"	"	"	"	"	"	"	"	"				
	"	"	97	"	B	"	B	B	"	"	"	B	"	"	"	"	"	"	"			See 3/	
	"	"	98	"	A	"	B	B	"	"	"	"	"	"	"	"	H	"	"				
	"	"	99	"	A	"	A	A	"	"	"	"	"	"	"	"	"	"	"				
	"	"	100	"	B	"	"	A	"	"	"	"	"	"	"	"	"	"	"				
	"	"	101	"	A	"	"	"	"	"	"	"	"	"	H	H	"	"	"				
	"	"	102	"	A	"	"	"	"	"	"	A	"	"	"	"	"	"	"				
	"	"	103	"	B	"	"	"	"	"	"	"	"	"	"	"	"	"	"				
	"	"	104	"	A	"	"	"	"	"	"	"	"	"	"	"	"	"	"				
	"	"	105	"	B	"	B	B	A	"	"	B	"	"	"	"	"	"	"				
	"	"	106	"	A	"	"	"	"	"	"	B	"	H	L	L	"	"	"				
	"	"	107	"	A	"	"	"	"	"	"	A	"	"	"	"	"	"	"				
	"	"	108	"	B	"	"	"	"	"	"	"	"	"	"	"	"	"	"				
	"	"	109	"	A	"	"	"	"	"	"	"	"	"	"	"	"	"	"				
	"	"	110	B	B	"	A	A	"	"	"	"	A	"	"	"	"	H	"				
	"	"	111	B	A	"	"	"	"	"	"	"	"	L	"	"	L	L	"				
	"	"	112	A	A	"	"	"	"	"	"	B	"	L	"	"	L	"	"				
	"	"	113	"	B	"	B	B	"	"	"	"	"	L	"	"	L	"	"				
	"	"	114	"	A	"	"	"	"	"	"	"	"	H	"	"	H	"	"				
	"	"	115	"	B	"	"	"	"	"	"	"	"	"	"	"	"	"	"				
	"	"	116	"	A	"	"	"	"	"	"	"	"	"	"	"	"	"	"				
	"	"	117	B	B	"	"	"	"	"	"	"	"	"	"	"	"	"	"				
	"	"	118	B	A	"	"	"	"	"	"	"	"	L	"	"	L	"	"				

See footnotes at end of device type 05.

TABLE III. Group A inspection for device type 05 – Continued.
Terminal conditions 2/

Subgroup	Symbol	MIL-STD-883 method	Case E,F Test No.	1 Clear	2 Clock	3 DATA INPUTS A	4 B	5 C	6 D	7 Enable P	8 GND	9 Load	10 Enable T	11 Output Q_D	12 Output Q_C	13 Output B	14 Output A	15 Carry output	16 V_{CC}	Meas. terminal	Test limits		
7	Func-	3014	119	A 5/	A 5/	B 5/	B 5/	B 5/	B 5/	A 5/	GND	B 5/	B 5/	L	L	L	L	L	4.5 V	Min			
T_C = 25°C	tional	"	120	"	B	"	A	"	B	"	"	"	"	"	" Q	" Q	"	"	"				
	tests 4/	"	121	"	A	"	A	"	B	"	"	"	"	"	"	H	"	"	"				
	"	"	122	"	A	"	B	"	A	"	"	"	"	"	"	H	"	"	"				
	"	"	123	"	B	"	"	"	A	"	"	"	"	"	"	H	"	"	"				
	"	"	124	"	A	"	"	"	A	"	"	"	"	H	"	L	"	"	"				
	"	"	125	"	A	"	"	"	B	"	"	"	A	H	"	"	"	"	"				
	"	"	126	"	B	"	"	"	B	"	"	"	"	H	"	"	"	"	"				
	"	"	127	"	A	"	"	"	B	"	"	"	"	L	"	"	"	"	"				
	"	"	128	"	A	"	A	A	A	"	"	"	"	L	"	"	"	"	"				
	"	"	129	"	B	"	"	A	A	"	"	"	"	L	"	"	"	"	"				
	"	"	130	"	A	"	"	A	A	"	"	"	"	H	H	H	"	"	"				
	"	"	131	"	A	A	"	B	B	"	"	"	"	H	H	"	"	"	"				
	"	"	132	"	B	A	"	B	"	"	"	"	"	H	H	"	"	"	"				
	"	"	133	"	A	A	"	B	"	"	"	"	"	L	L	"	H	"	"				
	"	"	134	"	A	B	B	A	"	"	"	"	"	"	L	"	H	"	"				
	"	"	135	"	B	B	"	"	"	"	"	"	"	"	L	"	H	"	"			See 3/	
	"	"	136	"	A	B	"	"	"	"	"	"	"	"	H	L	L	"	"				
	"	"	137	"	A	A	"	"	"	"	"	"	"	"	"	"	L	"	"				
	"	"	138	"	B	A	"	"	"	"	"	"	"	"	"	"	L	"	"				
	"	"	139	"	A	A	"	"	"	"	"	"	"	"	"	"	H	"	"				
	"	"	140	"	A	B	A	"	"	"	"	"	"	"	"	"	H	"	"				
	"	"	141	"	B	"	A	"	"	"	"	"	"	"	"	"	H	"	"				
	"	"	142	"	A	"	A	"	"	"	"	"	"	"	"	H	L	"	"				
	"	"	143	"	A	"	B	B	A	"	"	"	"	"			"	"	"				
	"	"	144	"	B	"	"	"	"	"	"	"	"	"	"	H H	"	"	"				
	"	"	145	"	A	"	"	"	"	"	"	"	"	H	L	L	"	"	"				
	"	"	146	"	A	A	"	"	"	"	"	"	"	"	"	"	"	"	"				
	"	"	147	"	B	"	"	"	"	"	"	"	"	"	"	"	"	"	"				
	"	"	148	"	A	"	"	"	"	"	"	"	"	"	"	"	H	H	"				
	"	"	149	"	A	"	A	A	"	"	"	A	"	"	"	"	H	H	"				
	"	"	150	"	B	"	A	A	"	"	"	A	"	"	"	"	H	H	"				
	"	"	151	"	A	"	A	A	"	"	"	A	"	L	"	"	L	L	"				
8	Repeat subgroup 7 at T_C = 125°C and T_C = -55°C.																						
9	F_{MAX} 6/	Fig 7&7C	152	4.5 V	IN					4.5 V	GND	4.5 V	4.5 V				OUT		5.0 V	Q_A	20		MHz
T_C = 25°C	t_{PLH3}	Fig 7&7B	153	"	"	GND	GND	GND	4.5 V	"	"	IN	"					OUT	"	Carry	3	45	ns
	t_{PHL3}	"	154	"	"	4.5 V	"	"	4.5 V	"	"	"	"					OUT	"	Carry	"	45	"
	t_{PHL4}	"	155	"	"	"	"	"	GND	"	"	"	"				OUT		"	Q_A	"	30	"
	t_{PHL4}	"	156	"	"	"	4.5 V	"	"	"	"	"	"			OUT			"	Q_B	"	"	"
	t_{PHL4}	"	157	"	"	"	4.5 V	4.5 V	"	"	"	"	"		OUT				"	Q_C	"	"	"
	t_{PHL4}	"	158	"	"	"	GND	GND	4.5 V	"	"	"	"	OUT					"	Q_D	"	"	"

See footnotes at end of device type 05.

TABLE III. Group A inspection for device type 05 – Continued.
Terminal conditions 2/

Subgroup	Symbol	MIL-STD-883 method	Case E, F	1	2	3	4	5	6	7	8	9	10	11	12	13	14	15	16	Meas. terminal	Test limits		
			Test No.	Clear	Clock	DATA INPUTS A	B	C	D	Enable P	GND	Load	Enable T	Output Q_D	Output Q_C	Output Q_B	Output Q_A	Carry output	V_{CC}		Min	Max	Unit
9	t_{PLH4}	Fig 7 & 7B	159	IN	IN					4.5 V	GND	4.5 V	4.5 V				OUT		5.0 V	Q_A	3	28	ns
T_C = 25°C	t_{PLH4}	"	160	4.5 V	"	4.5 V	GND	GND	GND	"	"	IN	"			OUT			"	Q_B	"	"	"
	t_{PLH4}	"	161	"	"	"	4.5 V	GND	"	"	"	"	"		OUT				"	Q_C	"	"	"
	t_{PLH4}	"	162	"	"	"	4.5 V	4.5 V	"	"	"	"	"	OUT					"	Q_D	"	"	"
	t_{PLH4}	Fig 7	163	8/	"	IN	4.5 V	4.5 V	4.5 V	"	"	GND	"				OUT		"	Q_A	"	"	"
	t_{PLH4}	and 7A	164	"	"	4.5 V	IN	4.5 V	4.5 V	"	"	"	"			OUT			"	Q_B	"	"	"
	t_{PLH4}	"	165	"	"	"	4.5 V	IN	4.5 V	"	"	"	"		OUT				"	Q_C	"	"	"
	t_{PLH4}	"	166	"	"	"	4.5 V	4.5 V	IN	"	"	"	"	OUT					"	Q_D	"	"	"
	t_{PLH5}	"	167	4.5 V	7/	"	GND	GND	4.5 V	"	"	"	IN					OUT	"	Carry	"	18	"
	t_{PHL5}	"	168	4.5 V	7/	"	GND	GND	"	"	"	"	IN					OUT	"	Carry	"	21	"
	t_{PHL6}	"	169	IN	IN	"	4.5 V	4.5 V	"	"	"	"	4.5 V				OUT		"	Q_A	"	30	"
	t_{PHL6}	"	170	"	"	"	"	"	"	"	"	"	"			OUT				"	Q_B	"	"	"
	t_{PHL6}	"	171	"	"	"	"	"	"	"	"	"	"		OUT					"	Q_C	"	"	"
	t_{PHL6}	"	172	"	"	"	"	"	"	"	"	"	"	OUT					"	Q_D	"	"	"
10	F_{MAX} 6/	Fig 7 & 7C	173	4.5 V	IN					"	"	4.5 V	"				OUT		"	Q_A	20		MHz
T_C =125°C	t_{PHL3}	Fig 7 & 7B	174	"	"	GND	GND	GND	4.5 V	"	"	IN	"					OUT	"	Carry	3	58	ns
	t_{PHL3}	"	175	"	"	4.5 V	"	"	4.5 V	"	"	"	"					OUT	"	Carry	"	58	"
	t_{PHL4}	"	176	"	"	"	"	"	GND	"	"	"	"				OUT		"	Q_A	"	**38**	"
	t_{PHL4}	"	177	"	"	"	4.5 V	"	"	"	"	"	"			OUT			"	Q_B	"	"	"
	t_{PHL4}	"	178	"	"	"	4.5 V	4.5 V	"	"	"	"	"		OUT				"	Q_C	"	"	"
	t_{PHL4}	"	179	"	"	"	GND	GND	4.5 V	"	"	"	"	OUT					"	Q_D	"	"	"
	t_{PLH4}	"	180	IN	"					"	"	4.5 V	"				OUT		"	Q_A	"	36	"
	t_{PLH4}	"	181	4.5 V	"	4.5 V	GND	GND	GND	"	"	IN	"			OUT			"	Q_B	"	"	"
	t_{PLH4}	"	182	"	"	"	4.5 V	GND	"	"	"	"	"		OUT				"	Q_C	"	"	"
	t_{PLH4}	"	183	"	"	"	4.5 V	4.5 V	"	"	"	"	"	OUT					"	Q_D	"	"	"
	t_{PLH4}	Fig 7	184	8/	"	IN	4.5 V	4.5 V	4.5 V	"	"	GND	"				OUT		"	Q_A	"	"	"
	t_{PLH4}	and 7A	185	"	"	4.5 V	IN	4.5 V	4.5 V	"	"	"	"			OUT			"	Q_B	"	"	"
	t_{PLH4}	"	186	"	"	"	4.5 V	IN	4.5 V	"	"	"	"		OUT				"	Q_C	"	"	"
	t_{PLH4}	"	187	"	"	"	4.5 V	4.5 V	IN	"	"	"	"	OUT					"	Q_D	"	"	"
	t_{PLH5}	"	188	4.5 V	7/	"	GND	GND	4.5 V	"	"	"	IN					OUT	"	Carry	"	27	"
	t_{PHL5}	"	189	4.5 V	7/	"	GND	GND	"	"	"	"	IN					OUT	"	Carry	"	27	"
	t_{PHL6}	"	190	IN	IN	"	4.5 V	4.5 V	"	"	"	"	4.5 V				OUT		"	Q_A	"	38	"
	t_{PHL6}	"	191	"	"	"	"	"	"	"	"	"	"			OUT				"	Q_B	"	"	"
	t_{PHL6}	"	192	"	"	"	"	"	"	"	"	"	"		OUT					"	Q_C	"	"	"
	t_{PHL6}	"	193	"	"	"	"	"	"	"	"	"	"	OUT					"	Q_D	"	"	"
11	Same tests, terminal conditions and limits as subgroup 10, except T_C = -55°C.																						

See footnotes on next page.

TABLE III. Group A inspection for device type 05 – Continued.
Terminal conditions 2/

1/ Normal clock pulse: ($V_{IL} \leq 0.8$ V, $V_{IH} \geq 2.0$ V).
2/ Terminal conditions (pins not designated may be H $\geq$ 2.0 V, or L $\leq$ 0.8 V, or open).
3/ Output voltages shall be either:
(a) H = 2.4 volts minimum and L = 0.4 volt maximum when using a high speed checker double comparator, or
(b) H $\geq$ 1.5 volts and L $\leq$ 1.5 volts when using a high speed checker single comparator.
4/ Only a summary of attributes data is required.
5/ A $\geq$ 2.0 V, B $\leq$ 0.8 V. Input voltages shown are the maximum for V_{IL} and the minimum for V_{IH}.
6/ F_{MAX}, minimum limit specified is the frequency of the input pulse. The output frequency shall be one-half of the input frequency.
7/ Apply 1 clock pulse prior to input pulses.
8/ Momentarily ground, then apply 4.5 V.
9/ Minimum limit for circuit C shall be -0.5 mA.

TABLE III. Group A inspection for device type 06.
Terminal conditions 2/

Subgroup	Symbol	MIL-STD-883 method	Case E,F Test No.	1 Clear	2 Clock	3 A	4 B	5 C	6 D	7 Enable P	8 GND	9 Load	10 Enable T	11 Output Q_D	12 Output Q_C	13 Output B	14 Output A	15 Carry output	16 V_{CC}	Meas. terminal	Test limits Min	Test limits Max	Test limits Unit
						DATA INPUTS																	
1	V_{OH}	3006	1	4.5 V	1/				2.0 V		GND	GND		-800 µA					4.5 V	Q_D	Min 2.4		V
T_C = 25°C	"	"	2	"	1/			2.0 V			"	"			-800 µA	Q			"	Q_C	"		"
		"	3	"	1/		2.0 V				"	"				-800 µA			"	Q_B	"		"
		"	4	"	1/	2.0 V					"	"					-800 µA			Q_A	"		"
		"	5	"	1/	2.0 V	2.0 V	2.0 V	2.0 V		"	"	2.0 V					-800 µA	"	Carry	"		"
"	V_{OL}	3007	6	"	1/				0.8 V	0.8 V	"	"	0.8 V	16 mA				"	"	Q_D		0.4	"
"	"	"	7	"	1/			0.8 V		"	"	"	"		16 mA				"	Q_C		"	"
"		"	8	"	1/		0.8 V			"	"	"	"			16 mA			"	Q_B		"	"
		"	9	"	1/	0.8 V				"	"	"	"				16 mA		"	Q_A		"	"
		"	10	"						"	"	"	"					16 mA	"	Carry		"	"
"	V_{IC}		11			-12 mA					"								"	Input A		-1.5	"
"	"		12				-12 mA				"								"	Input B		"	"
"	"		13					-12 mA			"								"	Input C		"	"
	"		14						-12 mA		"								"	Input D		"	"
	"		15							-12 mA	"								"	Enable P		"	"
	"		16								"	-12 mA							"	Load		"	"
	"		17								"		-12 mA						"	Enable T		"	"
	"		18	-12 mA							"								"	Clear		"	"
	"		19		-12 mA						"								"	Clock		"	"
	I_{IH9}	3010	20		2.4 V						"								5.5 V	Clock		80	µA
	I_{IH9}	"	21	1/		GND	GND	GND	GND	GND	"	GND	2.4 V						"	Enable T		80	"
	I_{IH10}	"	22		5.5 V						"								"	Clock		200	"
	I_{IH10}	"	23	1/		GND	GND	GND	GND	GND	"	GND	5.5 V						"	Enable T		200	"
	I_{IH11}	"	24	2.4 V							"								"	Clear		40	"
	"	"	25			2.4 V					"	5.5 V							"	Input A		'	"
	"	"	26				2.4 V				"	"							"	Input B		"	"
	"	"	27					2.4 V			"	"							"	Input C		"	"
	"	"	28						2.4 V		"	"							"	Input D		"	"
	"	"	29							2.4 V	"	"	GND						"	Enable P		"	"
	"	"	30								"	2.4 V							"	Load		"	"
	I_{IH12}	"	31	5.5 V							"								"	Clear		100	"
	"	"	32			5.5 V					"	5.5 V							"	Input A		"	"
	"	"	33				5.5 V				"	"							"	Input B		"	"
	"	"	34					5.5 V			"	"							"	Input C		"	"
	"	"	35						5.5 V		"	"							"	Input D		"	"
	"	"	36							5.5 V	"	"	GND						"	Enable P		"	"
	"	"	37								"	5.5 V							"	Load		"	"
	I_{IL5}	3009	38		0.4 V						"								"	Clock	-1.0	-2.3	mA

See footnotes at end of device type 06.

TABLE III. Group A inspection for device type 06 – Continued.

Terminal conditions 2/

Subgroup	Symbol	MIL-STD-883 method	Case E,F Test No.	1 Clear	2 Clock	3 A	4 B	5 C	6 D	7 P	8 GND	9 Load	10 T	11 Q_D	12 Q_C	13 B	14 A	15 output	16 V_{CC}	Meas. terminal	Test limits		
						DATA INPUTS				Enable			Enable	Output	Output	Output	Output	Carry				Max	Unit
1	I_{IL6}	3009	39			0.4 V					GND	GND							5.5 V	Input A	Min -0.4	-1.3	mA
T_C = 25°C	"	"	40				0.4 V				"	"			Q	Q			"	Input B	"	"	"
	"	"	41					0.4 V			"	"							"	Input C	"	"	"
	"	"	42						0.4 V		"	"							"	Input D	"	"	"
	I_{IL7}	"	43							0.4 V	"		4.5 V						"	Enable P	-0.7 9/	-1.6	"
	I_{IL7}	"	44								"	0.4 V							"	Load	-0.5	-1.6	"
	I_{IL7}	"	45	0.4 V							"								"	Clear	-0.7 9/	-1.6	"
	I_{IL8}	"		4.5 V	1/	4.5 V	4.5 V	4.5 V	4.5 V	4.5 V	"	GND	0.4 V						"	Enable T	-1.0	-3.2	"
	I_{OS}	3011	47	4.5 V	1/				4.5 V		"	GND		GND					"	Q_D	-20	-57	"
	"	"	48	"	"			4.5 V			"	"			GND				"	Q_C	"	"	"
	"	" 46	49	"	"		4.5 V				"	"				GND			"	Q_B	"	"	"
	"	"	50	"	"	4.5 V					"	"					GND		"	Q_A	"	"	"
	"	"	51	"	"	4.5 V	4.5 V	4.5 V	4.5 V		"	"	4.5 V					GND	"	Carry	"	"	"
	I_{CCH}	3005	52	5.5 V	5.5 V	5.5 V	5.5 V	5.5 V	5.5 V	5.5 V	"	5.5 V	5.5 V						"	V_{CC}		85	"
	I_{CCH}	"	53	5.5 V	5.5 V	5.5 V	5.5 V	5.5 V	5.5 V	5.5 V	"	GND	5.5 V						"	"		85	"
	I_{CCL}	"	54	GND	5.5 V	GND	GND	GND	GND	GND	"	GND	GND						"	"		91	"
	I_{CCL}	"	55	GND	GND	GND	GND	GND	GND	GND	"	GND	GND						"	"		91	"
2	Same tests, terminal conditions and limits as subgroup 1, except T_C = 125°C and V_{IC} tests are omitted.																						
3	Same tests, terminal conditions and limits as subgroup 1, except T_C = -55°C and V_{IC} tests are omitted.																						
7	Func-	3014	56	B 5/	A 5/	A 5/	A 5/	A 5/	A 5/	A 5/	GND	A 5/	A 5/	L	L	L	L	L	4.5 V				
T_C = 25°C	tional	"	57	A	A	B	B	B	B	"	"	"	B	"	"	"	L	"	"				
	tests 4/	"	58	"	B	A	A	A	A	"	"	"	A	"	"	"	L	"	"				
	"	"	59	"	A	A	A	A	A	"	"	"	A	"	"	"	H	"	"				
	"	"	60	"	A	B	B	B	B	"	"	"	B	"	"	"	H	"	"				
	"	"	61	"	B	A	A	A	A	"	"	"	A	"	"	"	H	"	"				
	"	"	62	"	A	A	A	A	A	"	"	"	A	"	"	H	L	"	"				
	"	"	63	"	A	B	B	B	B	"	"	"	B	"	"	"	L	"	"				
	"	"	64	"	B	A	A	A	A	"	"	"	A	"	"	"	L	"	"				
	"	"	65	"	A	A	A	A	A	"	"	"	A	"	"	"	H	"	"				
	"	"	66	"	A	B	B	B	B	"	"	"	B	"	"	"	H	"	"			See 3/	
	"	"	67	"	B	A	A	A	A	"	"	"	A	"	"	"	H	"	"				
	"	"	68	"	A	A	A	A	A	"	"	"	A	"	H	L	L	"	"				
	"	"	69	"	A	B	B	B	B	"	"	"	B	"	"	"	L	"	"				
	"	"	70	"	B	A	A	A	A	"	"	"	A	"	"	"	L	"	"				
	"	"	71	"	A	A	A	A	A	"	"	"	A	"	"	"	H	"	"				
	"	"	72	"	A	B	B	B	B	"	"	"	B	"	"	"	H	"	"				
	"	"	73	"	B	A	A	A	A	"	"	"	A	"	"	"	H	"	"				
	"	"	74	"	A	A	A	A	A	"	"	"	A	"	"	H	L	"	"				
	"	"	75	"	A	B	B	B	B	"	"	"	B	"	"	"	L	"	"				
	"	"	76	"	B	A	A	A	A	"	"	"	A	"	"	"	L	"	"				
	"	"	77	"	A	A	A	A	A	"	"	"	A	"	"	"	H	"	"				

See footnotes at end of device type 06.

TABLE III. Group A inspection for device type 06 – Continued.

Terminal conditions 2/

Subgroup	Symbol	MIL-STD-883 method	Case E,F Test No.	1 Clear	2 Clock	3 DATA INPUTS A	4 DATA INPUTS B	5 DATA INPUTS C	6 DATA INPUTS D	7 Enable P	8 GND	9 Load	10 Enable T	11 Output Q_D	12 Output Q_C	13 Output B	14 Output A	15 Carry output	16 V_{CC}	Meas. terminal	Test limits		
																						Max	Unit
1	Func-	3014	78	A 5/	A 5/	B 5/	B 5/	B 5/	B 5/	A 5/	GND	A 5/	B 5/	L	H	H	H	L	4.5 V	Min			
T_C = 25°C	tional	"	79	"	B	A	A	A	A	"	"	"	A	L	H Q	H Q	H	"	"				
	tests 4/	"	80	"	A	A	A	A	A	"	"	"	A	H	L	L	L	"	"				
	"	"	81	"	A	B	B	B	B	"	"	"	B	"	"	"	L	"	"				
	"	"	82	"	B	A	A	A	A	"	"	"	A	"	"	"	L	"	"				
	"	"	83	"	A	A	A	A	A	"	"	"	A	"	"	"	H	"	"				
	"	"	84	"	A	B	B	B	B	"	"	"	B	"	"	"	H	"	"				
	"	"	85	"	B	A	A	A	A	"	"	"	A	"	"	"	H	"	"				
	"	"	86	"	A	A	A	A	A	"	"	"	A	"	"	H	L	"	"				
	"	"	87	"	A	B	B	B	B	"	"	"	B	"	"	"	L	"	"				
	"	"	88	"	B	A	A	A	A	"	"	"	A	"	"	"	L	"	"				
	"	"	89	"	A	A	A	A	A	"	"	"	A	"	"	"	H	"	"				
	"	"	90	"	A	B	B	B	B	"	"	"	B	"	"	"	H	"	"				
	"	"	91	"	B	A	A	A	A	"	"	"	A	"	"	"	H	"	"				
	"	"	92	"	A	A	A	A	A	"	"	"	A	"	H	L	L	L	"				
	"	"	93	"	A	B	B	B	B	"	"	"	B	"			L	"	"				
	"	"	94	"	B	A	A	A	A	"	"	"	A	"	"	"	L	"	"				
	"	"	95	"	A	A	A	A	A	"	"	"	A	"	"	"	H	"	"				
	"	"	96	"	A	B	B	B	B	"	"	"	B	"	"	"	H	"	"				
	"	"	97	"	B	A	A	A	A	"	"	"	A	"	"	"	H	"	"				
	"	"	98	"	A	A	A	A	A	"	"	"	A	"	"	H	L	"	"				
	"	"	99	"	A	B	B	B	B	"	"	"	B	"	"	"	L	"	"			See 3/	
	"	"	100	"	B	A	A	A	A	"	"	"	A	"	"	"	L	"	"				
	"	"	101	"	A	A	A	A	A	"	"	"	A	"	"	"	H	H	"				
	"	"	102	"	A	B	B	B	B	"	"	"	B	"	"	"	H	L	"				
	"	"	103	"	B	A	A	A	A	"	"	"	A	"	"	"	H	H	"				
	"	"	104	"	A	"	"	"	"	"	"	"	"	L	L	L	L	L	"				
	"	"	105	B	A	"	"	"	"	"	"	"	"	"	"	"	"	"	"				
	"	"	106	A	A	"	"	"	"	B	"	"	"	"	"	"	"	"	"				
	"	"	107	"	B	"	"	"	"	B	"	"	B	"	"	"	"	"	"				
	"	"	108	"	A	"	"	"	"	A	"	"	"	"	"	"	"	"	"				
	"	"	109	"	B	"	B	B	B	"	"	"	"	"	"	"	"	"	"				
	"	"	110	"	A	"	B	B	B	"	"	"	"	"	"	"	"	"	"				
	"	"	111	"	B	"	B	B	"	"	"	B	"	"	"	"	"	"	"				
	"	"	112	"	A	"	B	B	"	"	"	"	"	"	"	"	H	"	"				
	"	"	113	"	A	"	A	A	"	"	"	"	"	"	"	"	"	"	"				
	"	"	114	"	B	"	"	"	"	"	"	"	"	"	"	"	"	"	"				
	"	"	115	"	A	"	"	"	"	"	"	"	"	"	H	H	"	"	"				
	"	"	116	"	A	"	"	"	"	"	"	A	"	"	"	"	"	"	"				
	"	"	117	"	B	"	"	"	"	"	"	A	"	"	"	"	"	"	"				
	"	"	118	"	A	"	"	"	"	"	"	A	"	"	"	"	"	"	"				
	"	"	119	"	B	"	B	B	A	"	"	B	"	"	"	"	"	"	"				
	"	"	120	"	A	"	B	B	"	"	"	"	"	H	L	L	"	"	"				

See footnotes at end of device type 06.

TABLE III. Group A inspection for device type 06 – Continued.

Terminal conditions 2/

Subgroup	Symbol	MIL-STD-883 method	Case E,F Test No.	1 Clear	2 Clock	3 DATA INPUTS A	4 DATA INPUTS B	5 DATA INPUTS C	6 DATA INPUTS D	7 Enable	8 GND	9 Load	10 Enable T	11 Output Q_D	12 Output Q_C	13 Output B	14 Output A	15 Carry output	16 V_{CC}	Meas. terminal	Test limits		
																						Max	Unit
7	Func-	3014	121	B 5/	A 5/	A 5/	A 5/	A 5/	A 5/	A 5/	GND	B 5/	A 5/	L	L	L	L	L	4.5 V	Min			
T_C = 25°C	tional	"	122	A	A	"	"	"	" P	"	"	"	"	L	" Q	L Q	L	"	"				
	tests 4/	"	123	"	B	"	"	"	"	"	"	"	"	L	"	L	L	"	"				
	"	"	124	"	A	"	"	"	"	"	"	"	"	H	H	H	H	H	"				
	"	"	125	"	B	"	"	"	"	"	"	"	"	H	H	H	H	H	"				
	"	"	126	B	A	"	"	"	"	"	"	A	"	L	L	L	L	L	"				
	"	"	127	A	A	B	"	"	"	"	"	B	"	L	L	L	"	"	"				
	"	"	128	"	B	"	"	"	"	"	"	"	"	L	L	L	"	"	"				
	"	"	129	"	A	"	"	"	"	"	"	"	"	H	H	H	"	"	"				
	"	"	130	"	A	"	"	B	B	"	"	"	"	H	H	"	"	"	"				
	"	"	131	"	B	"	"	"	"	"	"	"	"	H	H	"	"	"	"				
	"	"	132	"	A	"	"	"	"	"	"	"	"	L	L	"	"	"	"				
	"	"	133	"	A	A	"	"	"	"	"	"	"	"	"	"	"	"	"				
	"	"	134	"	B	A	"	"	"	"	"	"	"	"	"	"	"	"	"				
	"	"	135	"	A	A	"	"	"	"	"	"	"	"	"	"	H	"	"				
	"	"	136	"	A	B	B	A	"	"	"	"	"	"	"	"	H	"	"				
	"	"	137	"	B	B	"	"	"	"	"	"	"	"	"	"	H	"	"				
	"	"	138	"	A	B	"	"	"	"	"	"	"	"	H	L	L	"	"				
	"	"	139	"	A	A	"	"	"	"	"	"	"	"	"	"	L	"	"			See 3/	
	"	"	140	"	B	A	"	"	"	"	"	"	"	"	"	"	L	"	"				
	"	"	141	"	A	A	"	"	"	"	"	"	"	"	"	"	H	"	"				
	"	"	142	"	A	B	A	"	"	"	"	"	"	"	"	"	H	"	"				
	"	"	143	"	B	"	A	"	"	"	"	"	"	"		"	H	"	"				
	"	"	144	"	A	"	A	"	"	"	"	"	"	"	"	H	L	"	"				
	"	"	145	"	A	"	B	B	A	"	"	"	"	"	"	H	"	"	"				
	"	"	146	"	B	"	B	"	"	"	"	"	"	"	"	H	"	"	"				
	"	"	147	"	A	"	B	"	"	"	"	"	"	H	L	L	"	"	"				
	"	"	148	"	A	A	A	"	"	"	"	"	"	"	"	L	"	"	"				
	"	"	149	"	B	A	A	"	"	"	"	"	"	"	"	L	"	"	"				
	"	"	150	"	A	A	A	"	"	"	"	"	"	"	"	H	H	"	"				
	"	"	151	"	A	B	B	A	"	"	"	"	"	"	"	H	H	"	"				
	"	"	152	"	B	B	"	"	"	"	"	"	"	"	"	H	H	"	"				
	"	"	153	"	A	B	"	"	"	"	"	"	"	"	H	L	L	"	"				
	"	"	154	"	A	A	"	"	"	"	"	"	"	"	"	"	L	"	"				
	"	"	155	"	B	A	"	"	"	"	"	"	"	"	"	"	L	"	"				
	"	"	156	"	A	A	"	"	"	"	"	"	"	"	"	"	H	"	"				
8	Repeat subgroup 7 at T_C = 125°C and T_C = -55°C.																						
9	F_{MAX} 6/	Fig 7 & 7C	157	4.5 V	IN					4.5 V	GND	4.5 V	4.5 V				OUT		5.0 V	Q_A	20		MHz
T_C = 25°C	"	Fig 7 & 7B	158	"	"					"	"	"	"			OUT			"	Q_B	"		"
	"	"	159	"	"					"	"	"	"		OUT				"	Q_C	"		"
		"	160	"	"					"	"	"	"	OUT					"	Q_D	"		"

See footnotes at end of device type 06.

TABLE III. Group A inspection for device type 06 – Continued.
Terminal conditions 2/

Subgroup	Symbol	MIL-STD-883 method	Case E, F	1	2	3	4	5	6	7	8	9	10	11	12	13	14	15	16	Meas. terminal	Test limits		
			Test No.	Clear	Clock	DATA INPUTS A	B	C	D	Enable P	GND	Load	Enable T	Output Q_D	Output Q_C	Output Q_B	Output Q_A	Carry output	V_{CC}		Min	Max	Unit
9	t_{PLH3}	Fig 7 & 7B	161	4.5 V	IN	GND	4.5 V	4.5 V	4.5 V	4.5 V	GND	IN	4.5 V					OUT	5.0 V	Carry	3	45	ns
T_C = 25°C	t_{PHL3}	"	162	"	"	4.5 V	4.5 V	4.5 V	4.5 V	"	"	"	"					OUT	"	Carry	"	45	"
	t_{PHL4}	"	163	"	"	"	GND	GND	GND	"	"	"					OUT			Q_A	"	30	"
	t_{PHL4}	"	164	"	"	"	4.5 V	GND	"	"	"	"				OUT				Q_B	"	"	"
	t_{PHL4}	"	165	"	"	"	"	4.5 V	"	"	"	"			OUT			"		Q_C	"	"	"
	t_{PHL4}	"	166	"	"	"	"	4.5 V	4.5 V	"	"	"	"	OUT				"	"	Q_D	"	"	"
	t_{PHL4}	"		8/						"	"	4.5 V	"				OUT	"	"	Q_A	"	28	"
	t_{PHL4}	"	168	4.5 V	"	4.5 V	GND	GND	GND	"	"	IN	"			OUT			"	Q_B	"	"	"
	t_{PHL4}	"	169	"	"	"	4.5 V	GND	"	"	"	"			OUT					Q_C	"	"	"
	t_{PHL4}	"167	170	"	"	"	4.5 V	4.5 V	"	"	"	"	"	OUT					"	Q_D	"	"	"
	t_{PHL4}	Fig 7	171	8/	"	IN	4.5 V	4.5 V	4.5 V	"	"	GND	"				OUT	"	"	Q_A	"	"	"
	t_{PHL4}	and 7A	172	"	"	4.5 V	IN	4.5 V	4.5 V	"	"	"	"			OUT			"	Q_B	"	"	"
	t_{PHL4}	"	173	"	"	"	4.5 V	IN	4.5 V	"	"	"	"		OUT				"	Q_C	"	"	"
	t_{PHL4}	"	174	"	"	"	"	4.5 V	IN	"	"	"	"	OUT					"	Q_D	"	"	"
	t_{PHL5}	"	175	4.5 V	7/	"	"	"	4.5 V	"	"	"	IN					OUT	"	Carry	"	18	"
	t_{PHL5}	"	176	4.5 V	7/	"	"	"	"	"	"	"	IN					OUT	"	Carry	"	21	"
	t_{PHL6}	"	177	IN	IN	"	"	"	"	"	"	"	4.5 V				OUT		"	Q_A	"	39	"
	t_{PHL6}	"	178	"	"	"	"	"	"	"	"	"	"			OUT				"	Q_B	"	"	"
	t_{PHL6}	"	179	"	"	"	"	"	"	"	"	"	"		OUT					"	Q_C	"	"	"
	t_{PHL6}	"	180	"	"	"	"	"	"	"	"	"	"	OUT					"	Q_D	"	"	"
10	6/F_{MAX}	Fig 7 & 7C	181	4.5 V	"					"	"	4.5 V	"				OUT		"	Q_A	20		MHz
T_C =125°C	"	Fig 7 & 7B	182	"	"					"	"	"				OUT				Q_B	"		"
	"	"	183	"	"					"	"	"			OUT					Q_C	"		"
	"	"	184	"	"					"	"	"		OUT				"		Q_D	"		"
	t_{PLH3}	"	185	"	"	GND	4.5 V	4.5 V	4.5 V	"	"	IN	"					OUT	"	Carry	3	58	ns
	t_{PHL3}	"	186	"	"	4.5 V	4.5 V	4.5 V	4.5 V	"	"	"	"					OUT	"	Carry	"	58	"
	t_{PHL4}	"	187	"	"	"	GND	GND	GND	"	"	"	"				OUT		"	Q_A	"	**38**	"
	t_{PHL4}	"	188	"	"	"	4.5 V	GND	"	"	"	"	"			OUT			"	Q_B	"	"	"
	t_{PHL4}	"	189	"	"	"	"	4.5 V	"	"	"	"	"		OUT				"	Q_C	"	"	"
	t_{PHL4}	"	190	"	"	"	"	4.5 V	4.5 V	"	"	"	"	OUT					"	Q_D	"	"	"
	t_{PHL4}	"	191	8/	"	"				"	"	4.5 V	"				OUT		"	Q_A	"	36	"
	t_{PHL4}	"	192	4.5 V	"	4.5 V	GND	GND	GND	"	"	IN	"			OUT			"	Q_B	"	"	"
	t_{PHL4}	"	193	4.5 V	"	4.5 V	4.5 V	GND	GND	"	"	IN	"		OUT				"	Q_C	"	"	"
	t_{PHL4}	"	194	4.5 V	"	4.5 V	4.5 V	4.5 V	GND	"	"	IN	"	OUT					"	Q_D	"	"	"

See footnotes at end of device type 06.

TABLE III. Group A inspection for device type 06 – Continued.
Terminal conditions 2/

Subgroup	Symbol	MIL-STD-883 method	Case E, F	1	2	3	4	5	6	7	8	9	10	11	12	13	14	15	16	Meas. terminal	Test limits		
			Test No.	Clear	Clock	DATA INPUTS A	B	C	D	Enable P	GND	Load	Enable T	Output Q_D	Output Q_C	Output Q_B	Output Q_A	Carry output	V_{CC}		Min	Max	Unit
10	tPLH4	Fig 7	195	8/	IN	IN	4.5 V	4.5 V	4.5 V	4.5 V	GND	GND	4.5 V				OUT		5.0 V	Q_A	3	36	ns
T_C =125°C	tPLH4	and 7A	196	"	"	4.5 V	IN	4.5 V	4.5 V	"	"	"	"			OUT			"	Q_B	"	"	"
	tPLH4	"	197	"	"	"	4.5 V	IN	4.5 V	"	"	"	"		OUT				"	Q_C	"	"	"
	tPLH4	"	198	"	"	"	"	4.5 V	IN	"	"	"	"	OUT					"	Q_D	"	"	"
	tPLH5	"	199	4.5 V	7/		"	"	4.5 V	"	"	"	IN					OUT	"	Carry	"	27	"
	tPHL5	"	200	4.5 V	7/	"	"	"	"	"	"	"	IN					OUT	"	Carry	"	27	"
	tPHL6	"	201	IN	IN	"	"			"	"	"	4.5 V				OUT		"	Q_A	"	47	"
	tPHL6	"	202	"	"	"	"	"		"	"	"	"			OUT			"	Q_B	"	"	"
	tPHL6	"	203	"	"	"	"	"		"	"	"	"		OUT				"	Q_C	"	"	"
	tPHL6	"	204	"	"	"	"	"		"	"	"	"	OUT					"	Q_D	"	"	"
11	Same tests, terminal conditions and limits as subgroup 10, except T_C = -55°C.																						

1/ Normal clock pulse: ($V_{IL} \leq 0.8$ V, $V_{IH} \geq 2.0$ V).
2/ Terminal conditions (pins not designated may be H $\geq$ 2.0 V, or L $\leq$ 0.8 V, or open).
3/ Output voltages shall be either:
(a) H = 2.4 volts minimum and L = 0.4 volt maximum when using a high speed checker double comparator, or
(b) H $\geq$ 1.5 volts and L $\leq$ 1.5 volts when using a high speed checker single comparator.
4/ Only a summary of attributes data is required.
5/ A $\geq$ 2.0 V, B $\leq$ 0.8 V. Input voltages shown are the maximum for V_{IL} and the minimum for V_{IH}.
6/ F_{MAX}, minimum limit specified is the frequency of the input pulse. The output frequency shall be as follows: $F_{MAX}/2$ at Q_A, $F_{MAX}/4$ at Q_B, $F_{MAX}/8$ at Q_C, $F_{MAX}/16$ at Q_D.
7/ Apply 1 clock pulse prior to input pulses.
8/ Apply momentarily GND, then 4.5 volts prior to input pulses, maintain 4.5 volts during test.
9/ Minimum limit for circuit C shall be -0.5 mA.

TABLE III. Group A inspection for device type 07.
Terminal conditions 12/

Subgroup	Symbol	MIL-STD-883 method	Case C, D	1	2	3	4	5	6	7	8	9	10	11	12	13	14	Meas. terminal	Test limits		
			Test No.	Input BD	Reset $R_0(1)$	Reset $R_0(2)$	NC	V_{CC}	Reset $R_9(1)$	Reset $R_9(2)$	Output QC	Output QB	GND	Output QD	Output QA	NC	Input A		Min	Max	Unit
1	V_{OL}	3007	1	2.0 V	2.0 V	2.0 V		4.5 V	GND	GND	16 mA		GND				GND	QC		0.4	V
T_C = 25°C		"	2	2.0 V	"	"		"	GND	GND		16 mA	"				GND	QB		"	"
		"	3	2.0 V	"	"		"	4.5 V	0.8 V			"	16 mA			GND	QD		"	"
		"	4	GND	"	"		"	0.8 V	4.5 V			"		16 mA		2.0 V	QA		"	"
		"	5	2.0 V	4.5 V	0.8 V		"	2.0 V	2.0 V	16 mA		"				GND	QC		"	"
		"	6	2.0 V	0.8 V	4.5 V		"	"	"		16 mA	"				GND	QB		"	"
	OH	3006	7	2.0 V	4.5 V	0.8 V		"	"	"			"	-0.4 mA			GND	QD	2.4		V
		"	8	GND	0.8 V	4.5 V		"	"	"			"		-0.4 mA		2.0 V	QA	"		"
		"	9	2.0 V	"	0.8 V		"	"	"			"	-0.4 mA			GND	QD	"		"
V		"	10	GND	"	0.8 V		"	"	"			"		-0.4 mA		2.0 V	QA	"		"
		"	11	1/ 4/	1/	1/		"	0.8 V	0.8 V	-0.4 mA		"				GND	QC	"		"
		"	12	1/ 3/	1/	1/		"	0.8 V	0.8 V		-0.4 mA	"				GND	QB	"		"
	IL1	3009	13		0.4 V	4.5 V		5.5 V					"					$R_0(1)$	13/	13/	mA
	"	"	14		4.5 V	0.4 V		"					"					$R_0(2)$	"	"	"
	"	"	15					"	0.4 V	4.5 V			"					$R_g(1)$	"	"	"
I	"	"	16					"	4.5 V	0.4 V			"					$R_0(2)$	"	"	"
	IL2	"	17		GND	GND		"	2/	2/			"				0.4 V	Input A	"	"	"
	IL3	"	18	0.4 V	GND	GND		"	2/	2/			"					Input BD	"	"	"
I	IC		19		-12 mA			4.5 V					"					$R_0(1)$		-1.5	V
I	"		20			-12 mA		"					"					$R_0(2)$		"	"
V	"		21					"	-12 mA				"					$R_g(1)$		"	"
			22					"		-12 mA			"					$R_0(2)$		"	"
	"		23			GND		"	GND	GND			"				-12 mA	Input A		"	"
	"		24	-12 mA	GND	GND		"	GND	GND			"					Input BD		"	"
				GND																	

See footnotes at end of device type 07.

TABLE III. Group A inspection for device type 07 – Continued.
Terminal conditions 12/

Subgroup	Symbol	MIL-STD-883 method	Case C, D Test No.	1 Input BD	2 Reset $R_0(1)$	3 Reset R_0 (2)	4 NC	5 V_{CC}	6 Reset R_9 (1)	7 Reset R_9 (2)	8 Output QC	9 Output QB	10 GND	11 Output QD	12 Output QA	13 NC	14 Input A	Meas. terminal	Test limits Min	Max	Unit
1	I_{IH1}	3010	25		2.4 V	GND		5.5 V					GND					$R_0(1)$			µA
T_C = 25°C	"	"	26		GND	2.4 V		"					"					$R_0(2)$	40		"
	"	"	27					"	2.4 V	GND			"					$R_9(1)$	"		"
	"	"	28					"	GND	2.4 V			"					$R_9(2)$	"		"
	I_{IH3}	"	29		GND	GND		"	GND	GND			"				2.4 V	Input A	"	80	"
	I_{IH5}	"	30	2.4 V	GND	GND		"	GND	GND								Input BD	"	160	"
	I_{IH2}	"	31		5.5 V	GND		"					"					$R_0(1)$			"
	"	"	32		GND	5.5 V		"				"	"					$R_0(2)$	100		"
	"	"	33					"	5.5 V	GND			"					$R_9(1)$	"		"
	"	"	34					"	GND	5.5 V			"					$R_9(2)$	"		"
	I_{IH4}	"	35		GND	GND		"	GND	GND			"				5.5 V	Input A	"	200	"
	I_{IH6}	"	36	5.5 V	GND	GND		"	GND	GND								Input BD	"	400	"
	I_{OS}	3011	37		GND	GND		"	4.5 V	4.5 V			"	GND				QD	-20	-57	mA
	"	"	38		GND	GND		"	4.5 V	4.5 V		"	"		GND			QA	"	"	"
		"	39	2/ 3/	2/	2/		"	GND	GND		GND	"					QB	"	"	"
		"	40	2/ 4/	2/	2/		"	GND	GND	GND							QC	"	"	"
	I_{CC}		41	GND	2/	2/		"	GND	GND							GND	V_{CC}		44	mA
2	Same tests, terminal conditions and limits as for subgroup 1, except T_C = 125°C and V_{IC} tests are omitted. "																				
3	Same tests, terminal conditions and limits as for subgroup 1, except T_C = -55°C and V_{IC} tests are omitted. "																				
7	Func-	3014	42	A 6/	A 6/	A 6/		4.5 V	A 6/	A 6/	L	L	GND	H	H		B 6/				
T_C = 25°C	tional	"	43	B	"	"		"	A	A	"	"	"	H	H		"				
	tests 5/	"	44	B	"	"		"	B	B	"	"	"	L	L		"				
	"	"	45	A	B	B		"	A	A	"	"	"	H	H		"				
	"	"	46	B	B	B		"	A	A	"	"	"	H	H		"				
	"	"	47	B	A	A		"	B	B	"	"	"	L	L		"				
	"	"	48	A	A	"		"	"	B	"	"	"	"	"		"				
	"	"	49	B	A	"		"	"	A	"	"	"	"	"		"				
	"	"	50	A	B	"		"	"	"	"	"	"	"	"		"			See 7/	
	"	"	51	B	"	"		"	"	"	"	H	"	"	"		"				
	"	"	52	A	"	"		"	"	"	"	H	"	"	"		"				
	"	"	53	B	"	"		"	"	"	H	L	"	"	"		"				
	"	"	54	A	"	"		"	"	"	"	L	"	"	"		"				
	"	"	55	B	"	"		"	"	"	"	H	"	"	"		"				
	"	"	56	A	"	"		"	"	"	"	H	"	"	"		"				
	"	"	57	B	"	"		"	"	"	L	L	"	H	"		"				
	"	"	58	A	"	"		"	"	"	"	"	"	H	"		"				

See footnotes at end of device type 07.

TABLE III. Group A inspection for device type 07 – Continued.

Terminal conditions 12/

Subgroup	Symbol	MIL-STD-883 method	Case C, D Test No.	1 Input BD	2 Reset $R_0(1)$	3 Reset R_0 (2)	4 NC	5 V_{CC}	6 Reset R_9 (1)	7 Reset R_9 (2)	8 Output QC	9 Output QB	10 GND	11 Output QD	12 Output QA	13 NC	14 Input A	Meas. terminal	Test limits Min	Test limits Max	Test limits Unit
7	Func	3014	59	B 6/	B 6/	A 6/		4.5 V	B 6/	A 6/	L	L	GND	L	L		B 6/				
T_C = 25°C	tional	"	60	B	"	B		"	B	B	"	"	"	"	"		"				
	tests 5/	"	61	A	"	"		"	A	"	"	"	"	"	"		"				
	"	"	62	B	A	"		"	"	"	"	H	"	"	"		"				
	"	"	63	A	"	"		"	"	"	"	H	"	"	"		"				
	"	"	64	B	"	"		"	"	"	H	L	"	"	"		"				
	"	"	65	A	"	"		"	"	"	"	L	"	"	"		"				
	"	"	66	B	"	"		"	"	"	"	H	"	"	"		"				
	"	"	67	A	"	"		"	"	"	"	H	"	"	"		"				
	"	"	68	B	"	"		"	"	"	L	L	"	H	"		"				
	"	"	69	A	"	"		"	"	"	"	"	"	H	"		"				
	"	"	70	B	"	"		"	"	"	"	"	"	L	"		"				
	"	"	71	B	B	"		"	B	"	"	"	"	"	"		"				
	"	"	72	A	B	"		"	"	"	"	"	"	"	"		"				
	"	"	73	B	A	"		"	"	A	"	H	"	"	"		"				
	"	"	74	A	"	"		"	"	"	"	H	"	"	"		"				
	"	"	75	B	"	"		"	"	"	H	L	"	"	"		"				
	"	"	76	A	"	"		"	"	"	"	L	"	"	"		"				
	"	"	77	B	"	"		"	"	"	"	H	"	"	"		"				
	"	"	78	B	"	A		"	"	B	L	L	"	"	"		"				
	"	"	79	B	B	"		"	A	"	"	"	"	"	"		"				
	"	"	80	A	"	"		"	"	"	"	"	"	"	"		"			See 7/	
	"	"	81	B	"	"		"	"	"	"	H	"	"	"		"				
	"	"	82	A	"	"		"	"	"	"	H	"	"	"		"				
	"	"	83	B	"	"		"	"	"	H	L	"	"	"		"				
	"	"	84	A	"	"		"	"	"	"	L	"	"	"		"				
	"	"	85	B	"	"		"	"	"	"	H	"	"	"		"				
	"	"	86	A	"	B		"	"	A	L	L	"	H	H		"				
	"	"	87	A	"	B		"	"	B	"	"	"	H	H		"				
	"	"	88	A	A	A		"	B	"	"	"	"	L	L		"				
	"	"	89	B	A	A		"	"	"	"	"	"	"	"		"				
	"	"	90	A	B	B		"	"	"	"	"	"	"	"		"				
	"	"	91	B	"	"		"	"	"	"	H	"	"	"		"				
	"	"	92	A	"	"		"	"	"	"	H	"	"	"		"				
	"	"	93	B	"	"		"	"	"	H	L	"	"	"		"				
	"	"	94	A	"	"		"	"	"	"	L	"	"	"		"				
	"	"	95	B	"	"		"	"	"	"	H	"	"	"		"				
	"	"	96	A	"	"		"	"	"	"	H	"	"	"		"				
	"	"	97	B	A	A		"	"	"	L	L	"	"	"		"				
	"	"	98	B	B	B		"	"	"	"	L	"	"	"		"				
	"	"	99	A	"	"		"	"	"	"	L	"	"	"		"				
	"	"	100	B	"	"		"	"	"	"	H	"	"	"		"				
	"	"	101	A	"	"		"	"	"	"	H	"	"	"		"				
	"	"	102	B	"	"		"	"	"	H	L	"	"	"		"				

See footnotes at end of device type 07.

TABLE III. Group A inspection for device type 07 – Continued.

Terminal conditions 12/

Subgroup	Symbol	MIL-STD-883 method	Case C, D Test No.	1 Input BD	2 Reset R_0(1)	3 Reset R_0 (2)	4 NC	5 V_{CC}	6 Reset R_9 (1)	7 Reset R_9 (2)	8 Output QC	9 Output QB	10 GND	11 Output QD	12 Output QA	13 NC	14 Input A	Meas. terminal	Test limits Min	Test limits Max	Test limits Unit
7	Func-	3014	103	A	B	B		4.5 V	B	B	H	L	GND	L	L		B				
T_C = 25°C	tional	"	104	B	"	"		"	"	"	"	H	"	"	"		"				
	tests 5/	"	105	A	"	"		"	"	"	"	H	"	"	"		"				
		"	106	A	"	"		"	A	A	L	L	"	H	H		"				
		"	107	B	"	"		"	A	A	"	"	"	"	"		"			See 7/	
		"	108	B	"	"		"	B	B	"	"	"	"	"		"				
		"	109	A	"	"		"	"	"	"	"	"	"	"		"				
"		"	110	A	A	A		"	"	"	"	"	"	L	L		"				
"		"	111	B	A	A		"	"	"	"	"	"	L	L		"				
8	Repeat subgroup 7 at T_C = 125°C and T_C = -55°C.																				
9	F_{MAX} 8/	Fig 8	112		GND	GND		5.0 V	GND	GND	11/	11/		11/	OUT 10/			QA	10		MHz
T_C = 25°C	t_{PLH1}	"	113	9/	"	"		"	"	"	OUT 10/	10/	GND "	11/	9/ 10/		IN	QC	20	100	ns
	t_{PHL1}	"	114	9/	"	"		"	"	"	OUT 10/	10/	"	11/	9/ 10/	IN	IN	QC	20	100	ns
10	F_{MAX} 8/	"	115		"	"		"	"	"	11/	11/	"	11/	OUT 10/			QA	10		MHz
T_C = 125°C	t_{PLH1}	"	116	9/	"	"		"	"	"	OUT 10/	10/	"	11/	9/ 10/		IN	QC	20	115	ns
	t_{PHL1}	"	117	9/	"	"		"	"	"	OUT 10/	10/	"	11/	9/ 10/	IN	IN	QC	20	115	ns
11	Same test terminal conditions and limits as subgroup 10, except T_C = -55°C.																				

1/ Momentarily apply 2.0 V, then ground prior to taking measurements to set the device in desired state. Maintain ground for measurement.

2/ Apply 4.5 V pulse then ground prior to taking measurements to set the device in the desired state. Maintain ground for measurement.

3/ Apply one pulse after reset (R_0) pulses.

4/ Apply two pulses after reset (R_0) pulses.

5/ Only a summary of attributes data is required.

6/ A $\geq$ 2.0 V, B $\leq$ 0.8 V. Input voltages shown are the maximum for V_{IL} and the minimum for V_{IH}.

7/ Output voltages shall be either:

(a) H = 2.4 volts minimum and L = 0.4 volt maximum when using a high speed checker double comparator, or

(b) H $\geq$ 1.5 volts and L $\leq$ 1.5 volts when using a high speed checker single comparator.

8/ F_{MAX}, minimum limit specified is the frequency of the input pulse. The output frequency shall be one-half of the input frequency.

9/ Connect terminals together during test.

10/ See test figure 8 for terminal load.

11/ Omit specified loads for this test.

12/ Terminal conditions (pins not designated may be H $\geq$ 2.0 V, or L $\leq$ 0.8 V, open).

13/ The limits shown shall be as follows:

Test	Min/Max limits (ma) for circuit: A	B	C
I_{IL1}	-0.4/-1.3	-0.4/-1.3	-0.7/-1.6
I_{IL2}	-1.4/-3.2	-0.7/-3.2	-0.7/-3.2
I_{IL3}	-1.4/-4.8	-0.7/-4.8	-1.4/-6.4

TABLE III. Group A inspection for device type 08.
Terminal conditions 17/

Subgroup	Symbol	MIL-STD-883 method	Case E, F	1	2	3	4	5	6	7	8	9	10	11	12	13	14	15	16	Meas.	Test limits		
			Test No.	Data B Input	Output Q_B	Output Q_A	Count Down	Count Up	Output Q_C	Output Q_D	GND	Data D Input	Data C Input	Load	Carry Output	Borrow Output	Clear Input	Data A Input	V_{CC}	terminal	Min	Max	Unit
1	I_{IL2}	3010	1								GND			GND			GND	0.4 V	5.5 V	Data A	-0.7	-1.6	mA
T_C =25°C	I_{IL6}	"	2	0.4 V							"			"			"		"	Data B	"	"	"
	"	"	3								"		0.4 V	"			"		"	Data C	"	"	"
	"	"	4								"	0.4 V		"			"		"	Data D	"	"	"
	I_{IL7}	"	5								"			0.4 V			"		"	Load	18/	18/	"
	I_{IL8}	"	6								"						0.4 V		"	Clear	"	"	"
	I_{IL5}	"	7					0.4 V			"								"	Count Up	"	"	"
	I_{IL5}	"	8				0.4 V				"								"	Count Down	"	"	"
	I_{IH11}	"	9								"			4.5 V			4.5 V	2.4 V	"	Data A		40	µA
	"	"	10	2.4 V							"			"			"		"	Data B		"	"
	"	"	11								"		2.4 V	"			"		"	Data C		"	"
	"	"	12								"	2.4 V		"			"		"	Data D		"	"
	"	"	13								"			2.4 V			"		"	Load		"	"
	"	"	14								"						2.4 V		"	Clear		"	"
	"	"	15					2.4 V			"								"	Count Up		"	"
	"	"	16				2.4 V				"								"	Count Down		"	"
	I_{IH12}	"	17								"			4.5 V			4.5 V	5.5 V	"	Data A		100	µA
	"	"	18	5.5 V							"			"			"		"	Data B		"	"
	"	"	19								"		5.5 V	"			"		"	Data C		"	"
	"	"	20								"	5.5 V		"			"		"	Data D		"	"
	"	"	21								"			5.5 V			"		"	Load		"	"
	"	"	22								"						5.5 V		"	Clear		"	"
	"	"	23					5.5 V			"								"	Count Up		"	"
	"	"	24				5.5 V				"								"	Count Down		"	"

See footnotes at end of device type 08.

TABLE III. Group A inspection for device type 08 – Continued.
Terminal conditions 17/

Subgroup	Symbol	MIL-STD-883 method	Case E, F Test No.	1 Data B Input	2 Output Q_B	3 Output Q_A	4 Count Down	5 Count Up	6 Output Q_C	7 Output Q_D	8 GND	9 Data D Input	10 Data C Input	11 Load	12 Carry Output	13 Borrow Output	14 Clear Input	15 Data A Input	16 V_{CC}	Meas. terminal	Test limits Min	Max	Unit
1	V_{OH}	3006	25			-400µA					GND			0.8 V			0.8 V	2.0 V	4.5 V	Q_A	2.4		V
T_C =25°C	"		26	2.0 V	-400µA						"			"			"			Q_B	"		"
"	"		27						-400µA				2.0 V	"			"		"	Q_C	"		"
		"	28							-400µA	"	2.0 V		"			"		"	Q_D	"		"
	"	"	29					2.0 V			"				-400µA				"	Carry	"		"
		"	30				2.0 V			"	"					-400µA	"		"	Borrow	"		"
"	V_{OL}	3007	31			16 mA					"			0.8 V			0.8 V	0.8 V	"	Q_A		**0.4**	"
"	"	"	32	0.8 V	16 mA						"			"		"	"		"	Q_B			"
"	"	"	33						16 mA		"		0.8 V	"			"		"	Q_C			"
	"	"	34							16 mA	"	0.8 V		"			"		"	Q_D	"		"
		"	35	2.4 V				0.8 V			"	2.4 V	2.4 V	GND	16 mA		"	2.4 V	"	Carry	"	"	"
	"	"	36				0.8 V				"					16 mA	2.0 V		"	Borrow	"	"	"
	"	"	37				0.8 V				"			2.0 V		16 mA	2.0 V		"	Borrow		"	"
"	I_{OS}	3011	38			GND					"			GND			GND	2.4 V	5.5 V	Q_A	-20	-65	mA
	"	"	39	2.4 V	GND						"			"			"		"	Q_B	"	"	"
		"	40						GND		"		2.4 V	"			"		"	Q_C	"	"	"
		"	41							GND	"	2.4 V		"			"		"	Q_D	"	"	"
		"	42					2.4 V			"				GND		"		"	Carry	"	"	"
"		"	43				2.4 V				"					GND	"		"	Borrow	"	"	"
"	I_{CC}	3010	44								"			GND					"	V_{CC}		89	"
"	V_{IC}		45								"							-12 mA	4.5 V	Data A		-1.5	V
"	"		46	-12 mA							"								"	Data B		"	"
	"		47								"		-12 mA						"	Data C		"	"
	"		48								"	-12 mA							"	Data D		"	"
	"		49								"			-12 mA					"	Load		"	"
	"		50								"						-12 mA		"	Clear		"	"
			51					-12 mA			"								"	Count Up		"	"
	"		52				-12 mA				"								"	Count Down			"
2	Same tests, terminal conditions and limits as for subgroup 1, except T_C = 125°C, and V_{IC} tests are omitted.																				"		
3	Same tests, terminal conditions and limits as for subgroup 1, except T_C = -55°C, and V_{IC} tests are omitted.																						

See footnotes at end of device type 08.

TABLE III. Group A inspection for device type 08 – Continued.

Terminal conditions 17/

Subgroup	Symbol	MIL-STD-883 method	Case E, F	1	2	3	4	5	6	7	8	9	10	11	12	13	14	15	16	Meas. terminal	Test limits		
			Test No.	Data B Input	Output Q_B	Output Q_A	Count Down	Count Up	Output Q_C	Output Q_D	GND	Data D Input	Data C Input	Load	Carry Output	Borrow Output	Clear Input	Data A Input	V_{CC}		Min	Max	Unit
7	Func-	3014	53	A 3/	L	L	A 3/	A 3/	L	L	GND	A 3/	A 3/	A 3/	H	H	A 3/	A 3/	4.5 V				
T_C =25°C	tional	"	54	"	"	L	"	A	"	"	"	"	"	"	"	"	B	"	"				
	tests 2/	"	55	"	"	L	"	B	"	"	"	"	"	"	"	"	"	"	"				
	"	"	56	"	"	H	"	A	"	"	"	"	"	"	"	"	"	"	"				
	"	"	57	"	"	H	"	B	"	"	"	"	"	"	"	"	"	"	"				
	"	"	58	"	H	L	"	A	"	"	"	"	"	"	"	"	"	"	"				
	"	"	59	"	"	L	"	B	"	"	"	"	"	"	"	"	"	"	"				
	"	"	60	"	"	H	"	A	"	"	"	"	"	"	"	"	"	"	"				
	"	"	61	"	"	H	"	B	"	"	"	"	"	"	"	"	"	"	"				
	"	"	62	"	L	L	"	A	H	"	"	"	"	"	"	"	"	"	"				
	"	"	63	"	"	L	"	B	"	"	"	"	"	"	"	"	"	"	"				
	"	"	64	"	"	H	"	A	"	"	"	"	"	"	"	"	"	"	"				
	"	"	65	"	"	H	"	B	"	"	"	"	"	"	"	"	"	"	"				
	"	"	66	"	H	L	"	A	"	"	"	"	"	"	"	"	"	"	"				
	"	"	67	"	"	L	"	B	"	"	"	"	"	"	"	"	"	"	"				
	"	"	68	"	"	H	"	A	"	"	"	"	"	"	"	"	"	"	"				
	"	"	69	"	"	H	"	B	"	"	"	"	"	"	"	"	"	"	"				
	"	"	70	"	L	L	"	A	L	H	"	"	"	"	"	"	"	"	"				
	"	"	71	"	"	L	"	B	"	"	"	"	"	"	"	"	"	"	"				
	"	"	72	"	"	H	"	A	"	"	"	"	"	"	"	"	"	"	"				
	"	"	73	"	"	H	"	B	"	"	"	"	"	"	L	"	"	"	"				
	"	"	74	"	"	L	"	A	"	L	"	"	"	"	H	"	"	"	"		See 1/		
	"	"	75	"	"	L	B	"	"	L	"	"	"	"	"	L	"	"	"				
	"	"	76	"	"	H	A	"	"	H	"	"	"	"	"	H	"	"	"				
	"	"	77	"	"	H	B	"	"	"	"	"	"	"	"	"	"	"	"				
	"	"	78	"	"	L	A	"	"	"	"	"	"	"	"	"	"	"	"				
	"	"	79	"	"	L	B	"	"	"	"	"	"	"	"	"	"	"	"				
	"	"	80	"	H	H	A	"	H	L	"	"	"	"	"	"	"	"	"				
	"	"	81	"	"	H	B	"	"	"	"	"	"	"	"	"	"	"	"				
	"	"	82	"	"	L	A	"	"	"	"	"	"	"	"	"	"	"	"				
	"	"	83	"	"	L	B	"	"	"	"	"	"	"	"	"	"	"	"				
	"	"	84	"	L	H	A	"	"	"	"	"	"	"	"	"	"	"	"				
	"	"	85	"	"	H	B	"	"	"	"	"	"	"	"	"	"	"	"				
	"	"	86	"	"	L	A	"	"	"	"	"	"	"	"	"	"	"	"				
	"	"	87	"	"	L	B	"	"	"	"	"	"	"	"	"	"	"	"				
	"	"	88	"	H	H	A	"	L	"	"	"	"	"	"	"	"	"	"				
	"	"	89	"	"	H	B	"	"	"	"	"	"	"	"	"	"	"	"				
	"	"	90	"	"	L	A	"	"	"	"	"	"	"	"	"	"	"	"				
	"	"	91	"	"	L	B	"	"	"	"	"	"	"	"	"	"	"	"				
	"	"	92	"	L	H	A	"	"	"	"	"	"	"	"	"	"	"	"				
	"	"	93	"	"	H	B	"	"	"	"	"	"	"	"	"	"	"	"				
	"	"	94	"	"	L	A	"	"	"	"	"	"	"	"	"	"	"	"				
	"	"	95	"	"	L	B	"	"	"	"	"	"	"	"	L	"	"	"				

See footnotes at end of device type 08.

TABLE III. Group A inspection for device type 08 – Continued.

Terminal conditions 17/

Subgroup	Symbol	MIL-STD-883 method	Case E, F Test No.	1 Data B Input	2 Output Q_B	3 Output Q_A	4 Count Down	5 Count	6 Output Q_C	7 Output Q_D	8 GND	9 Data D Input	10 Data C Input	11 Load	12 Carry Output	13 Borrow Output	14 Clear Input	15 Data A Input	16 V_{CC}	Meas. terminal	Test limits Min	Max	Unit
7	Func-	3014	96	A 3/	L	H	A 3/	A 3/	L	H	GND	A 3/	A 3/	A 3/	H	H	B	A 3/	4.5 V				
T_C =25°C	tional	"	97	"	H	H	" Up	"	H	H	"	"	"	B	"	"	"	"	"				
	tests 2/	"	98	"	L	L	"	"	L	L	"	"	"	B	"	"	A	"	"				
	"	"	99	"	H	H	"	"	H	H	"	"	"	B	"	"	B	"	"				
	"	"	100	"	H	H	"	"	H	H	"	"	"	A	"	"	B	"	"				
	"	"	101	"	L	L	"	"	L	L	"	"	"	A	"	"	A	"	"				
	"	"	102	"	L	L	"	"	L	L	"	"	"	A	"	"	B	"	"				
	"	"	103	"	H	H	"	"	H	H	"	"	"	B	H	H	B	"	"				
	"	"	104	"	H	H	"	"	H	H	"	"	"	A	"	"	"	A	"				
	"	"	105	B	H	H	"	"	H	H	"	B	B	A	"	"	"	B	"				
	"	"	106	"	L	L	"	"	L	L	"	"	"	B	"	"	"	"	"			See 1/	
	"	"	107	"	"	"	B	"	"	"	"	"	"	"	"	L	"	"	"				
	"	"	108	"	"	"	A	"	"	"	"	"	"	"	"	H	"	"	"				
	"	"	109	"	"	"	"	B	"	"	"	"	"	"	"	"	"	"	"				
	"	"	110	"	"	"	"	A	"	"	"	"	"	"	"	"	"	"	"				
	"	"	111	"	"	"	"	"	"	"	"	"	"	A	"	"	"	"	"				
	"	"	112	"	"	"	"	"	"	"	"	"	"	"	"	"	A	"	"				
	"	"	113	"	"	"	B	"	"	"	"	"	"	"	"	L	"	"	"				
	"	"	114	"	"	"	A	"	"	"	"	"	"	"	"	H	"	"	"				
	"	"	115	"	"	"	A	B	"	"	"	"	"	"	"	H	"	"	"				
	"	"	116	"	"	'	A	A	"	"	"	"	"	"	"	H	"	"	"				
8	Repeat subgroup 7 at T_C = 125°C and T_C = -55°C.																						
9	F_{MAX} 14/	Fig 9A	117			OUT	2.4 V	4/						2.4 V			GND		5.0 V	Q_A	20		MHz
T_C =25°C	F_{MAX} 14/	Fig 9A	118			"	4/	2.4 V						2.4 V			GND		"	Q_A	20		MHz
	t_{PHL7}	Fig 9	119			"	GND	GND		"	"			5/			5/	2.4 V	"	Q_A	3	44	ns
	t_{PLH8}	Fig 9	120			"	GND	GND		"	"			6/			GND	6/	"	Q_A	"	44	"
	t_{PHL8}	Fig 9	121			"	GND	GND			"			7/			GND	7/	"	Q_A	"	44	"
	t_{PHL9}	Fig 9A	122	GND			2.4 V	8/			"	2.4 V	GND	8/	OUT		8/ GND	GND	"	Carry	"	28	"
	t_{PLH9}	"	123	"			"	9/			"	2.4 V	"	9/	OUT		9/	"	"	Carry	"	30	"
	t_{PHL10}	"	124	"			10/	2.4 V			"	GND	"	2.4 V		OUT	10/	"	"	Borrow	"	28	"
	t_{PLH10}	"	125	"			11/	2.4 V			"	GND	"	2.4 V		OUT	11/	"	"	Borrow	"	28	"
	t_{PLH11}	"	126	GND		OUT	2.4 V	15/			"	GND	"	15/			GND	GND	"	Q_A	"	42	"
	"	"	127	GND	OUT		"	"			"	"	"	"			"	2.4 V	"	Q_B	"	"	"
	"	"	128	2.4 V				"	OUT		"	"	"	"			"	2.4 V	"	Q_C	"	"	"
	"	"	129	2.4 V			"	"		OUT	"	"	2.4 V	"			"	2.4 V	"	Q_D	"	"	"
	t_{PHL11}	"	130	GND		"	16/	2.4 V		OUT	"	2.4 V	GND	16/			"	GND	"	Q_D	"	51	"
		"	131	GND			16/	2.4 V	OUT		"	GND	2.4 V	"			"	GND	"	Q_C	"	"	"
		"	132	2.4 V	OUT		16/	2.4 V			"	GND	GND	"			"	GND	"	Q_B	"	"	"
		"	133	GND		OUT	16/	2.4 V			"	GND	GND	"			"	2.4 V	"	Q_A	"	"	"

See footnotes at end of device type 08.

TABLE III. Group A inspection for device type 08 – Continued.
Terminal conditions 17/

Subgroup	Symbol	MIL-STD-883 method	Case E, F Test No.	1 Data B Input	2 Output Q_B	3 Output Q_A	4 Count Down	5 Count	6 Output Q_C	7 Output Q_D	8 GND	9 Data D Input	10 Data C Input	11 Load	12 Carry Output	13 Borrow Output	14 Clear Input	15 Data A Input	16 V_{CC}	Meas. terminal	Test limits Min	Max	Unit
10	F_{MAX} 14/	Fig 9A	134			OUT	2.4 V Up	4/			GND			2.4 V			GND		5.0 V	Q_A	20		MHz
T_C =125°C	F_{MAX} 14/	Fig 9A	135			"	4/	2.4 V			"			2.4 V			GND		"	Q_A	20		MHz
	t_{PHL7}	Fig 9	136			"	GND	GND			"			5/			5/	2.4 V	"	Q_A	3	57	ns
	t_{PLH8}	Fig 9	137			"	GND	GND			"			6/			GND	6/	"	Q_A	"	66	"
	t_{PHL8}	Fig 9	138			"	GND	GND			"			7/			GND	7/	"	Q_A	"	62	"
	t_{PHL9}	Fig 9A	139	GND			2.4 V	8/			"	2.4 V	GND	8/	OUT		8/ GND	GND	"	Carry	"	39	"
	t_{PLH9}	"	140	"			2.4 V	9/			"	2.4 V	"	9/	OUT		9/	"	"	Carry	"	45	"
	t_{PHL10}	"	141	"			10/	2.4 V			"	GND	"	2.4 V		OUT	10/	"	"	Borrow	"	39	"
	t_{PLH10}	"	142	"			11/	2.4 V			"	GND	"	2.4 V		OUT	11/	"	"	Borrow	"	42	"
	t_{PLH11}	"	143	GND		OUT	2.4 V	15/			"	GND	GND	15/			GND	GND	"	Q_A	"	63	"
		"	144	GND	OUT		2.4 V	15/			"	GND	GND	15/			"	2.4 V	"	Q_B	"	63	"
	"	"	145	2.4 V			2.4 V	15/	OUT		"	GND	GND	15/			"	2.4 V	"	Q_C	"	63	"
	"	"	146	2.4 V			2.4 V	15/		OUT	"	GND	2.4 V	15/			"	2.4 V	"	Q_D	"	63	"
"	t_{PHL11}	"	147	GND			16/	2.4 V		OUT	"	2.4 V	GND	16/			"	GND	"	Q_D	"	71	"
	"	"	148	GND			16/	2.4 V	OUT		"	GND	2.4 V	16/			"	GND	"	Q_C	"	71	"
		"	149	2.4 V	OUT		16/	2.4 V			"	GND	GND	16/			"	GND	"	Q_B	"	71	"
		"	150	GND		OUT	16/	2.4 V			"	GND	GND	16/			"	2.4 V	"	Q_A	"	71	"
11	Same tests, terminal conditions, and limits as subgroup 10, except T_C = -55°C.																						
"																							

1/ " Output voltages shall be either:
(a) H = 2.4 volts minimum and L = 0.4 volt maximum when using a high speed checker double comparator, or
(b) H ≥1.5 volts and L <1.5 volts when using a high speed checker single comparator.
2/ Only a summary of attributes data is required.
3/ A ≥2.0 V, B ≤0.8 V. Input voltages shown are the maximum for V_{IL} and the minimum for V_{IH}.
4/ See figure 9A. Apply waveform E for tests 117 and 134, and waveform H for tests 118 and 135.
5/ See figure 9, waveforms A, B, C, and D. Load A_{IN}, then apply waveform A and observe the drop in Q_A output.
6/ See figure 9, waveforms B, C, and D. Load A_{IN}, and observe t_{PLH} of waveform D at output Q_A.
7/ Repeat steps as in note 6. Observe the pulse delay of the drop in Q_A when the load pulse is applied.
8/ See figures 9 and 9A, waveforms A, B, C, E, F, and G. First use clear pulse, then load pulse, then one count up pulse. Also see figure 9A, note 4.
9/ See note 5, add one more count up pulse for t_{PLH9} as shown on figure 10A, waveforms F and G.
10/ See figures 9 and 9A. First clear pulse, then one count down pulse.
11/ See note 7. Clear pulse first, figure 9 waveforms A, B, and C, add one more count down pulse for t_{PLH10} as shown on figure 9A, waveforms J and K.
12/ See figures 9 and 9A. First a clear pulse, then one count up pulse for Q_A. On next three tests enter count up pulses to appropriate count to check Q_B, Q_C, and Q_D.
13/ See figure 9A waveforms H and J. On next three tests enter count down pulse, waveform H and observe t_{PHL11}, waveform J on outputs Q_C, Q_B, and Q_A.
14/ F_{MAX}, minimum limit specified is the frequency of the input pulse. The output frequency shall be one-half of the input frequency.
15/ Load pulse before count up input, then 4.5 V.
16/ Load pulse before count down input, then 4.5 V.
17/ Terminal conditions (pins not designated may be H ≥ 2.0 V, or L ≤ 0.8 V, or open).
18/ The limits shall be: -0.5 mA minimum, -1.3 mA maximum for circuit C, and -0.7 mA minimum, -1.6 mA maximum for all other circuits.

TABLE III. Group A inspection for device type 09.
Terminal conditions 17/

Subgroup	Symbol	MIL-STD-883 method	Case E, F	1	2	3	4	5	6	7	8	9	10	11	12	13	14	15	16	Meas. terminal	Test limits		
			Test No.	Data B Input	Output Q_B	Output Q_A	Down	Count Up	Output Q_C	Output D	GND	Data D Input	Data C Input	Load	Carry Output	Borrow Output	Clear Input	Data A Input	V_{CC}		Min	Max	Unit
1	I_{IL2}	3010	1								GND			GND			GND	0.4 V	5.5 V	Data A	-0.7	-1.6	mA
T_C =25°C	I_{IL6}	"	2	0.4 V					Q		"			"			"		"	Data B	"	19/	"
"		"	3								"		0.4 V	"			"		"	Data C	"	"	"
"		"	4								"	0.4 V		"			"		"	Data D	"	"	"
	I_{IL7}	"	5								"			0.4 V			"		"	Load	18/	18/	"
	I_{IL7}	"	6								"						0.4 V		"	Clear	"		"
	I_{IL5}	"	7					0.4 V			"								"	Count Up	"		"
	I_{IL5}	"	8				0.4 V				"								"	Count Down	"	"	"
	I_{IH11}	"	9	2.4 V							"			4.5 V			4.5 V	2.4 V	"	Data A		40	μA
	"	"	10								"			"			"		"	Data B		"	"
	"	"	11								"		2.4 V	"			"		"	Data C		"	"
	"	"	12								"	2.4 V		"			"		"	Data D		"	"
	"	"	13								"			2.4 V			"		"	Load		"	"
	"	"	14								"						2.4 V		"	Clear		"	"
	"	"	15					2.4 V			"								"	Count Up		"	"
	"	"	16				2.4 V				"								"	Count Down		"	"
	I_{IH12}	"	17	5.5 V							"			4.5 V			4.5 V	5.5 V	"	Data A		100	μA
	"	"	18								"			"			"		"	Data B		"	"
	"	"	19								"		5.5 V	"			"		"	Data C		"	"
	"	"	20								"	5.5 V		"			"		"	Data D		"	"
	"	"	21								"			5.5 V			"		"	Load		"	"
	"	"	22								"						5.5 V		"	Clear		"	"
	"	"	23					5.5 V			"								"	Count Up		"	"
	"	"	24				5.5 V				"								"	Count Down		"	"

See footnotes at end of device type 09.

TABLE III. Group A inspection for device type 09 – Continued.
Terminal conditions 17/

Subgroup	Symbol	MIL-STD-883 method	Case E, F Test No.	1 Data B Input	2 Output Q_B	3 Output Q_A	4 Count Down	5 Count	6 Output Q_C	7 Output Q_D	8 GND	9 Data D Input	10 Data C Input	11 Load	12 Carry Output	13 Borrow Output	14 Clear Input	15 Data A Input	16 V_{CC}	Meas. terminal	Test limits Min	Max	Unit
1	V_{OH}	3006	25			-400µA	Up				GND			0.8 V			0.8 V	2.0 V	4.5V	Q_A	2.4		V
T_C =25°C	"		26	2.0 V	-400µA						"								"	Q_B	"		"
	"	"	27						-400µA				2.0 V	"			"		"	Q_C	"		"
	""	"	28							-400µA	"	2.0 V	"			"			"	Q_D	"		"
	"	"	29					2.0 V		"	"				-400µA				"	Carry	"		"
	"	"	30				2.0 V				"		"			" -400µA	"		"	Borrow	"		"
	V_{OL}	3007	31			16 mA					"			0.8 V			0.8 V	0.8 V	"	Q_A		**0.4**	"
	"	"	32	0.8 V	16 mA						"								"	Q_B			"
		"	33						16 mA		"		0.8 V				"		"	Q_C	"		"
	"	"	34							16 mA	"	0.8 V	"	"		"	"		"	Q_D	"		"
	"	"	35	2.4 V				0.8 V			"	2.4 V	2.4 V	GND	16 mA		"	2.4 V	"	Carry	"	"	"
	"	"	36				0.8 V				"					16 mA	2.0 V		"	Borrow		"	"
	I_{OS}	3011	37			GND					"			GND			0.8 V	2.4 V	5.5V	Q_A	-20	-65	mA
	"	"	38	2.4 V	GND						"								"	Q_B	"	"	"
	"	"	39						GND		"		2.4 V	"			"		"	Q_C	"	"	"
	"	"	40							GND	"	2.4 V	"	"		"	"		"	Q_D	"	"	"
		"	41					2.4 V							GND				"	Carry	"	"	"
		"	42				2.4 V			"	"					GND "	"		"	Borrow	"	"	"
"	I_{CC}	3010	43								"			GND			"		"	V_{CC}		89	"
"	V_{IC}		44								"							-12 mA	4.5V	Data A		-1.5	V
	"		45	-12 mA							"								"	Data B		"	"
	"		46								"		-12 mA						"	Data C		"	"
	"		47								"	-12 mA							"	Data D		"	"
	"		48								"			-12 mA					"	Load		"	"
	"		49								"						-12 mA		"	Clear		"	"
	"		50					-12 mA			"								"	Count Up		"	"
	"		51				-12 mA				"								"	Count Down			"
2	Same tests, terminal conditions and limits as for subgroup 1, except T_C = 125°C, and V_{IC} tests are omitted.																				"		
3	Same tests, terminal conditions and limits as for subgroup 1, except T_C = -55°C, and V_{IC} tests are omitted.																						

See footnotes at end of device type 09.

TABLE III. Group A inspection for device type 09 – Continued.

Terminal conditions 17/

Subgroup	Symbol	MIL-STD-883 method	Case E, F	1	2	3	4	5	6	7	8	9	10	11	12	13	14	15	16	Meas. terminal	Test limits		
			Test No.	Data B Input	Output Q_B	Output Q_A	Count Down	Count Up	Output Q_C	Output Q_D	GND	Data D Input	Data C Input	Load	Carry Output	Borrow Output	Clear Input	Data A Input	V_{CC}		Min	Max	Unit
7	Func-	3014	52	B 3/	L	L	A 3/	A 3/	L	L	GND	B 3/	B 3/	B 3/	H	H	B 3/	B 3/	4.5 V				
T_C =25°C	tional	"	53	"	"	L	"	"	"	"	"	"	"	A	"	"	"	B	"				
	tests 2/	"	54	"	"	H	"	"	"	"	"	"	"	B	"	"	"	A	"				
	"	"	55	"	"	H	"	"	"	"	"	"	"	A	"	"	"	A	"				
	"	"	56	A	H	L	"	"	"	"	"	"	"	B	"	"	"	B	"				
	"	"	57	"	"	L	"	"	"	"	"	"	"	A	"	"	"	B	"				
	"	"	58	"	"	H	"	"	"	"	"	"	"	B	"	"	"	A	"				
	"	"	59	"	"	H	"	"	"	"	"	"	"	A	"	"	"	A	"				
	"	"	60	B	L	L	"	"	H	"	"	"	A	B	"	"	"	B	"				
	"	"	61	"	"	L	"	"	"	"	"	"	"	A	"	"	"	B	"				
	"	"	62	"	"	H	"	"	"	"	"	"	"	B	"	"	"	A	"				
	"	"	63	"	"	H	"	"	"	"	"	"	"	A	"	"	"	A	"				
	"	"	64	A	H	L	"	"	"	"	"	"	"	B	"	"	"	B	"				
	"	"	65	"	"	L	"	"	"	"	"	"	"	A	"	"	"	B	"				
	"	"	66	"	"	H	"	"	"	"	"	"	"	B	"	"	"	A	"				
	"	"	67	"	"	H	"	"	"	"	"	"	"	A	"	"	"	A	"				
	"	"	68	B	L	L	"	"	L	H	"	A	B	B	"	"	"	B	"				
	"	"	69	"	"	L	"	"	"	"	"	"	"	A	"	"	"	B	"				
	"	"	70	"	"	H	"	"	"	"	"	"	"	B	"	"	"	A	"				
	"	"	71	"	"	H	"	"	"	"	"	"	"	A	"	"	"	A	"				
	"	"	72	A	H	L	"	"	"	"	"	"	"	B	"	"	"	B	"				
	"	"	73	"	"	L	"	"	"	"	"	"	"	A	"	"	"	B	"		See 1/		
	"	"	74	"	"	H	"	"	"	"	"	"	"	B	"	"	"	A	"				
	"	"	75	"	"	H	"	"	"	"	"	"	"	A	"	"	"	A	"				
	"	"	76	B	L	L	"	"	H	"	"	"	A	B	"	"	"	B	"				
	"	"	77	"	"	L	"	"	"	"	"	"	"	A	"	"	"	B	"				
	"	"	78	"	"	H	"	"	"	"	"	"	"	B	"	"	"	A	"				
	"	"	79	"	"	H	"	"	"	"	"	"	"	A	"	"	"	A	"				
	"	"	80	A	H	L	"	"	"	"	"	"	"	B	"	"	"	B	"				
	"	"	81	"	H	L	"	"	"	"	"	"	"	A	"	"	"	B	"				
	"	"	82	"	H	H	"	"	"	"	"	"	"	B	"	"	"	A	"				
	"	"	83	"	L	L	"	"	L	L	"	"	"	B	"	"	A	"	"				
	"	"	84	"	"	"	"	"	"	"	"	"	"	A	"	"	A	"	"				
	"	"	85	"	"	"	"	"	"	"	"	"	"	"	"	"	B	"	"				
	"	"	86	"	"	"	B	"	"	"	"	"	"	"	"	L	"	"	"				
	"	"	87	"	H	H	A	"	H	H	"	"	"	"	"	H	"	"	"				
	"	"	88	"	"	H	B	"	"	"	"	"	"	"	"	"	"	"	"				
	"	"	89	"	"	L	A	"	"	"	"	"	"	"	"	"	"	"	"				
	"	"	90	"	"	L	B	"	"	"	"	"	"	"	"	"	"	"	"				
	"	"	91	"	L	H	A	"	"	"	"	"	"	"	"	"	"	"	"				
	"	"	92	"	"	H	B	"	"	"	"	"	"	"	"	"	"	"	"				
	"	"	93	"	"	L	A	"	"	"	"	"	"	"	"	"	"	"	"				
	"	"	94	"	"	L	B	"	"	"	"	"	"	"	"	"	"	"	"				

See footnotes at end of device type 09.

TABLE III. Group A inspection for device type 09 – Continued.

Terminal conditions 17/

Subgroup	Symbol	MIL-STD-883 method	Case E, F	1	2	3	4	5	6	7	8	9	10	11	12	13	14	15	16	Meas. terminal	Test limits		
			Test No.	Data B Input	Output Q_B	Output Q_A	Count Down	Count Up	Output Q_C	Output Q_D	GND	Data D Input	Data C Input	Load	Carry Output	Borrow Output	Clear Input	Data A Input	V_{CC}		Min	Max	Unit
7	Func-	3014	95	A 3/	H	H	A 3/	A 3/	L	H	GND	A 3/	A 3/	A 3/	H	H	B 3/	A 3/	4.5 V				
T_C =25°C	tional	"	96	"	"	H	B	"	"	"	"	"	"	"	"	"	"	"	"				
	tests 2/	"	97	"	"	L	A	"	"	"	"	"	"	"	"	"	"	"	"				
	"	"	98	"	"	L	B	"	"	"	"	"	"	"	"	"	"	"	"				
	"	"	99	"	L	H	A	"	"	"	"	"	"	"	"	"	"	"	"				
	"	"	100	"	"	H	B	"	"	"	"	"	"	"	"	"	"	"	"				
	"	"	101	"	"	L	A	"	"	"	"	"	"	"	"	"	"	"	"				
	"	"	102	"	"	L	B	"	"	"	"	"	"	"	"	"	"	"	"				
	"	"	103	"	H	H	A	"	H	L	"	"	"	"	"	"	"	"	"				
	"	"	104	"	"	H	B	"	"	"	"	"	"	"	"	"	"	"	"				
	"	"	105	"	"	L	A	"	"	"	"	"	"	"	"	"	"	"	"				
	"	"	106	"	"	L	B	"	"	"	"	"	"	"	"	"	"	"	"				
	"	"	107	"	L	H	A	"	"	"	"	"	"	"	"	"	"	"	"				
	"	"	108	"	"	H	B	"	"	"	"	"	"	"	"	"	"	"	"				
	"	"	109	"	"	L	A	"	"	"	"	"	"	"	"	"	"	"	"				
	"	"	110	"	"	L	B	"	"	"	"	"	"	"	"	"	"	"	"				
	"	"	111	"	H	H	A	"	L	"	"	"	"	"	"	"	"	"	"				
	"	"	112	"	"	H	B	"	"	"	"	"	"	"	"	"	"	"	"				
	"	"	113	"	"	L	A	"	"	"	"	"	"	"	"	"	"	"	"				
	"	"	114	"	"	L	B	"	"	"	"	"	"	"	"	"	"	"	"				
	"	"	115	"	L	H	A	"	"	"	"	"	"	"	"	"	"	"	"				
	"	"	116	"	"	H	B	"	"	"	"	"	"	"	"	"	"	"	"		See 1/		
	"	"	117	"	"	L	A	"	"	"	"	"	"	"	"	"	"	"	"				
	"	"	118	"	"	L	"	B	"	"	"	"	"	"	"	"	"	"	"				
	"	"	119	"	"	H	"	A	"	"	"	"	"	"	"	"	"	"	"				
	"	"	120	"	"	H	"	B	"	"	"	"	"	"	"	"	"	"	"				
	"	"	121	"	H	L	"	A	"	"	"	"	"	"	"	"	"	"	"				
	"	"	122	"	"	L	"	B	"	"	"	"	"	"	"	"	"	"	"				
	"	"	123	"	"	H	"	A	"	"	"	"	"	"	"	"	"	"	"				
	"	"	124	"	"	H	"	B	"	"	"	"	"	"	"	"	"	"	"				
	"	"	125	"	L	L	"	A	H	"	"	"	"	"	"	"	"	"	"				
	"	"	126	"	"	L	"	B	"	"	"	"	"	"	"	"	"	"	"				
	"	"	127	"	"	H	"	A	"	"	"	"	"	"	"	"	"	"	"				
	"	"	128	"	"	H	"	B	"	"	"	"	"	"	"	"	"	"	"				
	"	"	129	"	H	L	"	A	"	"	"	"	"	"	"	"	"	"	"				
	"	"	130	"	H	L	"	B	"	"	"	"	"	"	"	"	"	"	"				
	"	"	131	"	H	H	"	A	"	"	"	"	"	"	"	"	"	"	"				
	"	"	132	"	H	H	"	B	"	"	"	"	"	"	"	"	"	"	"				
	"	"	133	"	L	L	"	A	L	H	"	"	"	"	"	"	"	"	"				
	"	"	134	"	"	L	"	B	"	"	"	"	"	"	"	"	"	"	"				
	"	"	135	"	"	H	"	A	"	"	"	"	"	"	"	"	"	"	"				
	"	"	136	"	"	H	"	B	"	"	"	"	"	"	"	"	"	"	"				
		"	137	"	H	L	"	A	"	"	"	"	"	"	"	"	"	"	"				

See footnotes at end of device type 09.

"

TABLE III. Group A inspection for device type 09 – Continued.

Terminal conditions 17/

Subgroup	Symbol	MIL-STD-883 method	Case E, F Test No.	1 Data B Input	2 Output Q_B	3 Output Q_A	4 Count Down	5 Count Up	6 Output Q_C	7 Output Q_D	8 GND	9 Data D Input	10 Data C Input	11 Load	12 Carry Output	13 Borrow Output	14 Clear Input	15 Data A Input	16 V_{CC}	Meas. terminal	Test limits Min	Max	Unit
7	Func-	3014	138	A 3/	H	L	A 3/	B 3/	L	H	GND	A 3/	A 3/	A 3/	H	H	B 3/	A 3/	4.5 V				
T_C = 25°C	tional	"	139	"	"	H	"	A	"	"	"	"	"	"	"	"	"	"	"				
	tests 2/	"	140	"	"	H	"	B	"	"	"	"	"	"	"	"	"	"	"				
		"	141	"	L	L	"	A	H	"	"	"	"	"	"	"	"	"	"				
		"	142	"	"	L	"	B	"	"	"	"	"	"	"	"	"	"	"				
		"	143	"	"	H	"	A	"	"	"	"	"	"	"	"	"	"	"				
"		"	144	"	"	H	"	B	"	"	"	"	"	"	"	"	"	"	"				
"		"	145	"	H	L	"	A	"	"	"	"	"	"	"	"	"	"	"				
"		"	146	"	"	L	"	B	"	"	"	"	"	"	"	"	"	"	"				
"		"	147	"	"	H	"	A	"	"	"	"	"	"	"	"	"	"	"				
"		"	148	"	"	H	"	B	"	"	"	"	"	"	L	"	"	"	"				
"		"	149	"	L	L	"	A	L	L	"	"	"	"	H	"	"	"	"				
"		"	150	"	"	"	"	A	"	"	"	"	"	"	"	"	A	"	"			See 1/	
"		"	151	"	"	"	"	B	"	"	"	"	"	"	"	"	"	"	"				
"		"	152	"	"	"	"	A	"	"	"	"	"	"	"	"	"	"	"				
"	"	"	153	"	"	"	B	"	"	"	"	"	"	"	"	L	"	"	"				
"	"	"	154	"	"	"	A	"	"	"	"	"	"	"	"	H	"	"	"				
"	"	"	155	"	"	"	"	"	"	"	"	"	"	"	"	"	B	"	"				
	"	"	156	"	H	H	"	"	H	H	"	"	"	B	"	"	"	"	"				
	"	"	157	"	"	"	"	B	"	"	"	"	"	"	L	"	"	"	"				
	"	"	158	"	"	"	"	A	"	"	"	"	"	"	H	"	"	"	"				
	"	"	159	"	"	"	B	A	"	"	"	"	"	"	H	"	"	"	"				
	"	"	160	"	"	"	A	A	"	"	"	"	"	"	H	"	"	"	"				
8	Repeat subgroup 7 at T_C = 125°C and T_C = -55°C.																						
9	F_{MAX} 14/	Fig 9A	161			OUT	2.4 V	4/			"			2.4 V			GND		5.0 V	Q_A	20		MHz
T_C = 25°C	F_{MAX} 14/	Fig 9A	162				4/	2.4 V			"			2.4 V			GND		"	Q_A	20		MHz
	t_{PHL7}	Fig 9	163				GND	GND			"			5/			5/	2.4 V	"	Q_A	3	44	ns
	t_{PLH8}	Fig 9	164				GND	GND			"			6/			GND	6/	"	Q_A	"	44	"
	t_{PHL8}	Fig 9	165				GND	GND			"			7/			GND	7/	"	Q_A	"	44	"
	t_{PHL9}	Fig 9A	166	2.4 V			2.4 V	8/			"	2.4 V	2.4 V	8/	OUT		8/ GND	GND	"	Carry	"	28	"
	t_{PLH9}	"	167	2.4 V				9/			"	2.4 V	2.4 V	9/	OUT		9/	"	"	Carry	"	30	"
	t_{PHL10}	"	168	GND			10/	2.4 V			"	GND	GND	2.4 V		OUT	10/	"	"	Borrow	"	28	"
	t_{PLH10}	"	169	GND			11/	2.4 V			"	GND	GND	2.4 V		OUT	11/	"	"	Borrow	"	28	"

See footnotes at end of device type 09.

TABLE III. Group A inspection for device type 09 – Continued.
Terminal conditions 17/

Subgroup	Symbol	MIL-STD-883 method	Case E, F	1	2	3	4	5	6	7	8	9	10	11	12	13	14	15	16	Meas. terminal	Test limits		
			Test No.	Data B Input	Output Q_B	Output Q_A	Count Down	Count	Output Q_C	Output Q_D	GND	Data D Input	Data C Input	Load	Carry Output	Borrow Output	Clear Input	Data A Input	V_{CC}		Min	Max	Unit
9	t_{PLH11}	Fig 9A	170	GND		OUT	2.4 V Up	15/			GND	GND	GND	2.4 V			GND	GND	5.0 V	Q_A	3	42	ns
T_C = 25°C	"	"	171	GND	OUT		"	"			"	"	GND	"			"	2.4 V	"	Q_B	"	"	"
	"	"	172	2.4 V			"	"	OUT		"	"	GND	"			"	2.4 V	"	Q_C	"	"	"
	"	"	173	2.4 V			"	"		OUT	"	"	2.4 V	"			"	2.4 V	"	Q_D	"	"	"
	t_{PHL11}	"	174	GND			16/	2.4 V		OUT	"	2.4 V	GND	16/			"	GND	"	Q_D	"	51	"
		"	175	GND			"	"	OUT		"	GND	2.4 V	16/			"	GND	"	Q_C	"	"	"
		"	176	2.4 V	OUT		"	"			"	GND	GND	16/			"	GND	"	Q_B	"	"	"
"		"	177	GND		OUT	"	"			"	GND	GND	16/			"	2.4 V	"	Q_A	"	"	"
10	F_{MAX} 14/	Fig 9A	178			OUT	2.4 V	4/			"			2.4 V			GND		"	Q_A	20		MHz
"																							
T_C = 125°C	F_{MAX} 14/	Fig 9A	179			"	4/	2.4 V			"			2.4 V			GND		"	Q_A	20		MHz
"																							
	t_{PHL7}	Fig 9	180			"	GND	GND			"			5/			5/	2.4 V	"	Q_A	3	57	ns
	t_{PLH8}	Fig 9	181			"	GND	GND			"			6/			GND	6/	"	Q_A	"	**66**	"
	t_{PHL8}	Fig 9	182			"	GND	GND			"			7/			GND	7/	"	Q_A	"	62	"
	t_{PLH9}	Fig 9A	183	2.4 V			2.4 V	8/			"	2.4 V	2.4 V	8/	OUT		8/ GND	GND	"	Carry	"	39	"
	t_{PLH9}	"	184	2.4 V			2.4 V	9/			"	2.4 V	2.4 V	9/	OUT		9/	"	"	Carry	"	45	"
	t_{PHL10}	"	185	GND			10/	2.4 V			"	GND	GND	2.4 V		OUT	10/	"	"	Borrow	"	39	"
	t_{PLH10}	"	186	GND			11/	2.4 V			"	GND	GND	2.4 V		OUT	11/	"	"	Borrow	"	42	"
	t_{PLH11}	"	187	GND		OUT	2.4 V	15/			"	GND	GND	2.4 V			GND	GND	"	Q_A	"	63	"
	"	"	188	GND	OUT		2.4 V	"			"		GND	2.4 V			"	2.4 V	"	Q_B	"	63	"
	"	"	189	2.4 V			2.4 V	"	OUT		"		GND	2.4 V			"	2.4 V	"	Q_C	"	63	"
	"	"	190	2.4 V			2.4 V	"		OUT	"	GND	2.4 V	2.4 V			"	2.4 V	"	Q_D	"	63	"
	t_{PHL11}	"	191	GND			16/	2.4 V		OUT	"	2.4 V	GND	16/			"	GND	"	Q_D	"	71	"
		"	192	GND			"	"	OUT		"	GND	2.4 V	16/			"	GND	"	Q_C	"	71	"
		"	193	2.4 V	OUT		"	"			"	GND	GND	16/			"	GND	"	Q_B	"	71	"
"		"	194	GND		OUT	"	"			"	GND	GND	16/			"	2.4 V	"	Q_A	"	71	"
11	Same tests, terminal conditions, and limits as subgroup 10, except T_C = -55°C.																						
"																							

See footnotes on next page.

TABLE III. Group A inspection for device type 09 – Continued.
Terminal conditions 17/

1/ Output voltages shall be either:
(a) H = 2.4 volts minimum and L = 0.4 volt maximum when using a high speed checker double comparator, or
(b) H ≥ 1.5 volts and L < 1.5 volts when using a high speed checker single comparator.

2/ Only a summary of attributes data is required.

3/ A ≥2.0 V, B ≤0.8 V. Input voltages shown are the maximum for V_{IL} and the minimum for V_{IH}.

4/ See figure 9A. Apply waveform E for tests 161 and 178, and waveform H for tests 162 and 179.

5/ See figure 9, waveforms A, B, C, and D. Load A_{IN}, then apply waveform A and observe the drop in Q_A output.

6/ See figure 9, waveforms B, C, and D. Load A_{IN}, and observe t_{PLH} of waveform D at output Q_A.

7/ Repeat steps as in note 6. Observe the pulse delay of the drop in Q_A when the load pulse is applied.

8/ See figures 9 and 9A, waveforms A, B, C, E, F, and G. First use clear pulse, then load pulse, then one count up pulse. Also see figure 9B, note 7.

9/ See note 8, add one more count up pulse for t_{PLH9} as shown on figure 9A, waveforms F and G.

10/ See figures 9 and 9A. First clear pulse, then one count down pulse.

11/ See note 9. Clear pulse first, figure 9, waveforms A, B, and C, add one more count down pulse for t_{PLH10} as shown on figure 9A, waveforms J and K.

12/ See figures 9 and 9A. First a clear pulse, then one count up pulse for Q_A. On next three tests enter count up pulses to appropriate count to check Q_B, Q_C, and Q_D.

13/ See figure 9A, waveforms H and J. On next three tests enter count down pulse, waveform H and observe t_{PHL11}, waveform J on outputs Q_C, Q_B, and Q_A.

14/ F_{MAX}, minimum limit specified is the frequency of the input pulse. The output frequency shall be one-half of the input frequency.

15/ Load pulse before count up input, then 4.5 V.

16/ Load pulse before count down input, then 4.5 volts.

17/ Terminal conditions (pins not designated may be H ≥ 2.0 V, or L ≤ 0.8 V, or open).

18/ The limits shall be: -0.5 mA minimum, -1.3 mA maximum for circuit C, and -0.7 mA minimum, -1.6 mA maximum for all other circuits.

19/ The limits shall be -0.5 mA minimum and -1.3 mA maximum for circuit E.

5. PACKAGING

5.1 Packaging requirements. For acquisition purposes, the packaging requirements shall be as specified in the contract or order (see 6.2). When packaging of materiel is to be performed by DoD or in-house contractor personnel, these personnel need to contact the responsible packaging activity to ascertain packaging requirements. Packaging requirements are maintained by the Inventory Control Point's packaging activity within the Military Service or Defense Agency, or within the military service's system command. Packaging data retrieval is available from the managing Military Department's or Defense Agency's automated packaging files, CD-ROM products, or by contacting the responsible packaging activity.

6. NOTES

(This section contains information of a general or explanatory nature that may be helpful, but it is not mandatory)

6.1 Intended use. Microcircuits conforming to this specification are intended for logistic support of existing equipment.

6.2 Acquisition requirements. Acquisition documents should specify the following:

a. Title, number, and date of the specification.

b. PIN and compliance identifier, if applicable (see 1.2).

c. Requirements for delivery of one copy of the conformance inspection data pertinent to the device inspection lot to be supplied with each shipment by the device manufacturer, if applicable.

d. Requirements for certificate of compliance, if applicable.

e. Requirements for notification of change of product or process to contracting activity in addition to notification to the qualifying activity, if applicable.

f. Requirements for failure analysis (including required test condition of method 5003 of MIL-STD-883), corrective action, and reporting of results, if applicable.

g. Requirements for product assurance options.

h. Requirements for special carriers, lead lengths, or lead forming, if applicable. These requirements should not affect the part number. Unless otherwise specified, these requirements will not apply to direct purchase by or direct shipment to the Government.

i. Requirements for "JAN" marking.

j. Packaging requirements (see 5.1).

6.3 Qualification. With respect to products requiring qualification, awards will be made only for products which are, at the time of award of contract, qualified for inclusion in Qualified Manufacturers List QML-38535 whether or not such products have actually been so listed by that date. The attention of the contractors is called to these requirements, and manufacturers are urged to arrange to have the products that they propose to offer to the Federal Government tested for qualification in order that they may be eligible to be awarded contracts or purchase orders for the products covered by this specification. Information pertaining to qualification of products may be obtained from DSCC-VQ, 3990 E. Broad Street, Columbus, Ohio 43123-1199.

6.4 Superseding information. The requirements of MIL-M-38510 have been superseded to take advantage of the available Qualified Manufacturer Listing (QML) system provided by MIL-PRF-38535. Previous references to MIL-M-38510 in this document have been replaced by appropriate references to MIL-PRF-38535. All technical requirements now consist of this specification and MIL-PRF-38535. The MIL-M-38510 specification sheet number and PIN have been retained to avoid adversely impacting existing government logistics systems and contractor's parts lists.

6.5 Abbreviations, symbols, and definitions. The abbreviations, symbols, and definitions used herein are defined in MIL-PRF-38535, MIL-HDBK-1331, and as follows:

GND ..... Ground zero voltage potential
V_{IN} ..... Voltage level at an input terminal
I_{IN} ..... Current flowing into an input terminal

6.6 Logistic support. Lead materials and finishes (see 3.4) are interchangeable. Unless otherwise specified, microcircuits acquired for Government logistic support will be acquired to device class B (see 1.2.2), lead material and finish A (see 3.4). Longer length leads and lead forming should not affect the part number.

6.7 Substitutability. The cross-reference information below is presented for the convenience of users. Microcircuits covered by this specification will functionally replace the listed generic-industry type. Generic-industry microcircuit types may not have equivalent operational performance characteristics across military temperature ranges or reliability factors equivalent to MIL-M-35810 device types and may have slight physical variations in relation to case size. The presence of this information should not be deemed as permitting substitution of generic-industry types for MIL-M-38510 types or as a waiver of any of the provisions of MIL-PRF-38535.

Military device type	Generic-industry type
01	5492
02	5493
03	54160
04	54163A
05	54162
06	54161
07	5490
08	54192
09	54193

6.8 Manufacturers' designation. Manufacturers' circuits which form a part of this specification are designated with an "X" as shown in table IV herein.

TABLE IV. Manufacturers' designations.

Circuit	A	B	C	D	E	F
Device type	Texas Instruments, Incorporated	National Semiconductor Corporation	Motorola Incorporated	Advanced Micro Devices, Incorporated	Signetics Corporation	Fairchild Semi-conductor
01	X	X	X		X	
02	X	X	X		X	
03	X	X	X	X	X	
04	X	X	X	X	X	
05	X	X	X	X	X	X
06	X	X	X	X	X	X
07	X	X	X		X	
08			X		X	
09	X		X		X	

6.9 Changes from previous issue. Marginal notations are not used in this revision to identify changes with respect to the previous issue due to the extensiveness of the changes.

Custodians:
Army - CR
Navy - EC
Air Force - 11
DLA - CC

Preparing activity:
DLA - CC

(Project 5962-2101)

Review activities:
Army - MI, SM
Navy - AS, CG, MC, SH, TD
Air Force - 03, 19, 99

NOTE: The activities listed above were interested in this document as of the date of this document. Since organizations and responsibilities can change, you should verify the currency of the information above using the ASSIST Online database at http://assist.daps.dla.mil.