INCH-POUND
MIL-M-38510/105A
23 January 2006
SUPERSEDING
MIL-M-38510/105
23 December 1980

MILITARY SPECIFICATION

MICROCIRCUITS, LINEAR, CMOS, HIGH LEVEL ANALOG SWITCH WITH DRIVER, MONOLITHIC SILICON

This specification is approved for use by all Departments and Agencies of the Department of Defense.

Inactive for new design after 10 July 1995.

The requirement for acquiring the product herein shall consist of this specification sheet and MIL-PRF-38535.

1. SCOPE

1.1 Scope. This specification covers the detail requirements for silicon, CMOS, monolithic, analog switches. Two product assurance classes and a choice of case outlines and lead finishes are provided and are reflected in the complete part number. For this product, the requirements of MIL-M-38510 have been superseded by MIL-PRF-38535, (see 6.4)

1.2 Part or Identifying Number (PIN). The PIN is in accordance with MIL-PRF-38535, and as specified herein.

1.2.1 Device types. The device types are as follows:

Device type	Circuit
01	One-channel, 75 ohm, SPST switch
02	Two-channel, 75 ohm, SPST switch
03	One-channel, 75 ohm, SPDT switch
04	Two-channel, 75 ohm, SPDT switch
05	One-channel, 75 ohm, DPST switch
06	Two-channel, 75 ohm, DPST switch
07	One-channel, 75 ohm, DPDT switch
08	One-channel, 75 ohm, 4PST switch

NOTE: A channel is defined as a driver with associated switches.

1.2.2 Device class. The device class is the product assurance level as defined in MIL-PRF-38535.

1.2.3 Case outline. The case outlines are as designated in MIL-STD-1835 and as follows:

Outline letter	Descriptive designator	Terminals	Package style
A 1/	GDFP5-F14 or CDFP6-F14	14	Flat pack
E	GDIP1-T16 or CDIP2-T16	16	Dual-in-line
I	MACY1-X10	10	Can

1/ Inactive for new design. Acceptable only for use in equipment designed or redesigned on or before 29 November 1986.

Comments, suggestions, or questions on this document should be addressed to: Commander, Defense Supply Center Columbus, ATTN: DSCC-VAS, 3990 East Broad St., Columbus, OH 43218-3990, or email linear@dscc.dla.mil. Since contact information can change, you may want to verify the currency of this address information using the ASSIST Online database at http://assist.daps.dla.mil.

1.3 Absolute maximum ratings.

V+ - V-	33 V dc
V+ - V_D	30 V dc
V_D - V-	30 V dc
V_D - V_S	±22 V dc
V_L – V-	33 V dc
V_L – V_{IN}	30 V dc
V_L – V_R	20 V dc
V_{IN} – V_R	20 V dc
V_R – V-	33 V dc
V_R – V_{IN}	2 V dc
Current (any terminal except S or D)	30 mA
Storage temperature	-65°C to +150°C
Lead temperature (soldering, 60 seconds)	+300°C
Junction temperature (T_J)	+175°C

1.4 Recommended operating conditions.

$+V_{CC}$	+15 V dc
$-V_{CC}$	-15 V dc
V_R	0 V dc
V_L	5 V dc
Ambient operating temperature range (T_A)	-55°C ≤ T_A ≤ +125°C

1.5 Power and thermal characteristics.

Case outline	Maximum allowable power dissipation 2/	Maximum θ_{JC} 3/	Maximum θ_{JA}
A	350 mW at T_A = 125°C	60°C/W	140°C/W
E	400 mW at T_A = 125°C	35°C/W	120°C/W
I	350 mW at T_A = 125°C	40°C/W	140°C/W

2/ All leads welded or soldered to PC board.
3/ Applies only when $T_A \geq 75°C$.

2. APPLICABLE DOCUMENTS

2.1 General. The documents listed in this section are specified in sections 3, 4, or 5 of this specification. This section does not include documents cited in other sections of this specification or recommended for additional information or as examples. While every effort has been made to ensure the completeness of this list, document users are cautioned that they must meet all specified requirements of documents cited in sections 3, 4, or 5 of this specification, whether or not they are listed.

2.1.1 Specifications, standards, and handbooks. The following specifications and standards form a part of this specification to the extent specified herein. Unless otherwise specified, the issues of these documents are those cited in the solicitation or contract.

DEPARTMENT OF DEFENSE SPECIFICATIONS

MIL-PRF-38535 - Integrated Circuits (Microcircuits) Manufacturing, General Specification for.

DEPARTMENT OF DEFENSE STANDARDS

MIL-STD-883 - Test Method Standard for Microelectronics.
MIL-STD-1835 - Interface Standard Electronic Component Case Outlines.

(Copies of these documents are available online at http://assist.daps.dla.mil/quicksearch/ or http://assist.daps.dla.mil or from the Standardization Document Order Desk, 700 Robbins Avenue, Building 4D, Philadelphia, PA 19111-5094.

2.2 Order of precedence. In the event of a conflict between the text of this specification and the references cited herein the text of this document shall take precedence. Nothing in this document, however, supersedes applicable laws and regulations unless a specific exemption has been obtained.

3. REQUIREMENTS

3.1 Qualification. Microcircuits furnished under this specification shall be products that are manufactured by a manufacturer authorized by the qualifying activity for listing on the applicable qualified manufacturers list before contract award (see 4.3 and 6.3).

3.2 Item requirements. The individual item requirements shall be in accordance with MIL-PRF-38535 and as specified herein or as modified in the device manufacturer's Quality Management (QM) plan. The modification in the QM plan shall not affect the form, fit, or function as described herein.

3.3 Design, construction, and physical dimensions. The design, construction, and physical dimensions shall be as specified in MIL-PRF-38535 and herein.

3.3.1 Circuit diagram and terminal connections. The circuit diagram and terminal connections shall be as specified on figure 1.

3.3.2 Schematic circuits. The schematic circuits shall be maintained by the manufacturer and made available to the qualifying activity and the preparing activity upon request.

3.3.4 Case outlines. The case outlines shall be as specified in 1.2.3.

3.4 Lead material and finish. The lead material and finish shall be in accordance with MIL-PRF-38535 (see 6.6).

3.5 Electrical performance characteristics. The electrical performance characteristics are as specified in table I, and apply over the full recommended ambient operating temperature range, unless otherwise specified.

3.5.1 Switch operation. The analog switches listed below are guaranteed to turn “on” with either a “low” input ($V_R \leq V_{IL} \leq 0.8$ V) or “high” input (2.4 V $\leq V_{IH} \leq V_{IL}$) as specified below (see figure 1).

Device types	V_{IN}	Channels ON		Channels OFF	
01	2.4 V dc	1			
	0.8 V dc			1	
02, 05, 03	2.4 V dc	1, 2	1		2
	0.8 V dc		2	1, 2	1
04	2.4 V dc	1, 2		3, 4	
	0.8 V dc	3, 4		1, 2	
07	2.4 V dc	2, 3		1, 4	
	0.8 V dc	1, 4		2, 3	
06, 08	2.4 V dc	1, 2, 3, 4			
	0.8 V dc			1, 2, 3, 4	

3.6 Electrical test requirements. Electrical test requirements for each device class shall be the subgroups specified in table II. The electrical tests for each subgroup are described in table III.

3.7 Marking. Marking shall be in accordance with MIL-PRF-38535.

3.8 Microcircuit group assignment. The devices covered by this specification shall be in microcircuit group number 82 (see MIL-PRF-38535, appendix A).

TABLE I. Electrical performance characteristics.

Characteristic	Symbol	Conditions V_{CC} = ±15 V, GND = 0 V unless otherwise specified	Temperature range	Device type	Limits		Unit
					Min	Max	
Drain-source ON resistance	R_{DS}	V_D = -10 V, I_S = 10 mA, see figure 2	T_A = -55°C, 25°C	All		75	Ω 1/
			T_A = 125°C			150	
		V_D = 10 V, I_S = -10 mA, see figure 2	T_A = -55°C, 25°C	All		75	
			T_A = 125°C			150	
		V_D = -7.5 V, V_{CC} = ±10 V, I_S = 10 mA, see figure 2	T_A = -55°C, 25°C	All		75	
			T_A = 125°C			150	
		V_D = 7.5 V, V_{CC} = ±10 V, I_S = -10 mA, see figure 2	T_A = -55°C, 25°C	All		75	
			T_A = 125°C			150	
Channel ON leakage current	$I_{D(ON)}$	V_S = V_D = 10 V, (see 3.5.1 for V_{IN}), see figure 3	T_A = -55°C, 125°C	All	-200	200	nA
			T_A = 25°C		-2	+2	
		V_S = V_D = -10 V, (see 3.5.1 for V_{IN}), see figure 3	T_A = -55°C, 125°C	All	-200	200	
			T_A = 25°C		-2	+2	
Drain OFF leakage current	$I_{D(OFF)}$	V_D = 10 V, V_S = -10 V, (see 3.5.1 for V_{IN}), see figure 4	T_A = -55°C, 125°C	All	-100	100	nA
			T_A = 25°C		-1	+1	
		V_D = -10 V, V_S = 10 V, (see 3.5.1 for V_{IN}), See figure 4	T_A = -55°C, 125°C	All	-100	100	
			T_A = 25°C		-1	+1	
Source OFF leakage current	$I_{S(OFF)}$	V_D = -10 V, V_S = 10 V, (see 3.5.1 for V_{IN}), see figure 5	T_A = -55°C, 125°C	All	-100	100	nA
			T_A = 25°C		-1	+1	
		V_D = 10 V, V_S = -10 V, (see 3.5.1 for V_{IN}), see figure 5	T_A = -55°C, 125°C	All	-100	100	
			T_A = 25°C		-1	+1	
Input current, input voltage low	I_{IL}	V_{IN} = 0 V, see figure 6	T_A = -55°C, 25°C	All	-1	0	μA
			T_A = 125°C		-10	0	
Input current, input voltage high	I_{IH}	V_{IN} = 2.4 V, 5 V, see figure 6	T_A = -55°C, 25°C	All	0	1	μA
			T_A = 125°C		0	10	

See footnotes at end of table.

TABLE I. Electrical performance characteristics – Continued.

Test	Symbol	Conditions V_{CC} = ±15 V, GND = 0 V unless otherwise specified	Temperature range	Device type	Limits		Unit
					Min	Max	
Positive supply current	$+I_{CC}$	V_{IN} = 0 V, 5 V see figure 7	T_A = -55°C, 25°C	All		10	µA
			T_A = 125°C			100	
Negative supply current	$-I_{CC}$	V_{IN} = 0 V, 5 V see figure 7	T_A = -55°C, 25°C	All	-10		µA
			T_A = 125°C		-100		
Logic supply current	$+I_L$	V_{IN} = 0 V, 5 V, see figure 7	T_A = -55°C, 25°C	All		10	µA
			T_A = 125°C			100	
Reference supply current	$+I_R$	V_{IN} = 0 V, 5 V, see figure 7	T_A = -55°C, 25°C	All	-10		µA
			T_A = 125°C		-100		
Turn ON time	t_{ON}	See figure 8	T_A = -55°C	All		375	ns
			T_A = 25°C			450	
			T_A = 125°C			550	
Turn OFF time	t_{OFF}	See figure 8	T_A = -55°C	All		250	ns
			T_A = 25°C			250	
			T_A = 125°C			400	
Single channel isolation	V_{ISO}	f = 1 MHz , V_{GEN} = 1 V_{P-P}, see figure 9	T_A = 25°C	All	50		dB
Crosstalk between channels	V_{CT}	f = 1 MHz , V_{GEN} = 1 V_{P-P}, see figure 10	T_A = 25°C	All	50		dB
Charge transfer error	V_{CTE}	V_S = GND, see figure 11	T_A = 25°C	All		15	mV
Break-before-make time delay	t_D	See figure 12	-55°C ≤ T_A ≤ 125°C	03,04, 07	20		ns

See footnotes at end of table.

TABLE I. Electrical performance characteristics – Continued.

Test	Symbol	Conditions V_{CC} = ±15 V, GND = 0 V unless otherwise specified	Temperature range	Device type	Limits		Unit
Driver input capacitance	C_A	V_{IN} = 0 V, see 4.4.1d	T_A = 25°C	All		30	pF
Switch input capacitance	C_{IS}	See 4.4.1d, switch off	T_A = 25°C	All		20	pF
Switch output capacitance	C_{OS}	See 4.4.1d, switch off	T_A = 25°C	All		20	pF

1/ The listed resistance limits correspond to the following voltage values:

75 Ω correspond to ±9.25 V and ±6.75 V; 150 Ω correspond to ±8.50 V and ±6.0 V; see table III.

4. VERIFICATION.

4.1 Sampling and inspection. Sampling and inspection procedures shall be in accordance with MIL-PRF-38535 or as modified in the device manufacturer's Quality Management (QM) plan. The modification in the QM plan shall not effect the form, fit, or function as function as described herein.

4.2 Screening. Screening shall be in accordance with MIL-PRF-38535, and shall be conducted on all devices prior to qualification and quality conformance inspection. The following additional criteria shall apply:

a. The burn-in test duration, test condition, and test temperature, or approved alternatives shall be as specified in the device manufacturer's QM plan in accordance with MIL-PRF-38535. The burn-in test circuit shall be maintained under document control by the device manufacturer's Technology Review Board (TRB) in accordance with MIL-PRF-38535 and shall be made available to the acquiring or preparing activity upon request. The test circuit shall specify the inputs, outputs, biases, and power dissipation, as applicable, in accordance with the intent specified in test method 1015 of MIL-STD-883.

b. Reverse bias burn-in (method 1015 of MIL-STD-883). This screen shall apply to class S only. However, regardless of device class, for devices 03, 04, and 07, an additional burn-in shall be performed with the logic level of the switch drivers opposite that used in the first burn-in. Ambient temperature (T_A) shall be 125°C minimum. Duration for reverse bias test shall be 24 hours minimum for class S devices, and duration for additional burn-in (class B devices) shall be 160 hours minimum.

c. Interim and final electrical test parameters shall be as specified in table II, except interim electrical parameters test prior to burn-in is optional at the discretion of the manufacturer.

d. For class S devices, post dynamic burn-in, or class B devices, post static burn-in, electrical parameter measurements may, at the manufacturer's option, be performed separately or included in the final electrical parameter measurements.

e. Additional screening for space level product shall be as specified in MIL-PRF-38535.

TABLE II. Electrical test requirements.

MIL-PRF-38535 test requirements	Subgroups (see table III)	
	Class S devices	Class B devices
Interim electrical parameters	1	1
Final electrical test parameters	1*, 2, 3, 9	1*, 2, 3, 9
Group A test requirements	1,2,3,(4,7)**, 9,10,11, (12,13,14)***	1,2,3,(4,7)**, 9,10,11, (12,13,14)***
Group B electrical test parameters when using the method 5005 QCI option	1,2,3 and table IV delta limits	N/A
Group C end-point electrical parameters	1,2,3 and table IV delta limits	1 and table IV delta limits
Additional electrical subgroups for group C periodic inspections	N/A	(4, 7)****
Group D end-point electrical parameters	1,2,3	1
Additional electrical subgroups for group D periodic inspections	(4,7)*****	None

*PDA applies to subgroup 1.
** See 4.4.1e
*** See 4.4.1c
**** See 4.4.3c
***** See 4.4.4b

4.3 Qualification inspection. Qualification inspection shall be in accordance with MIL-PRF-38535.

4.4 Technology Conformance inspection (TCI). Technology conformance inspection shall be in accordance with MIL-PRF-38535 and herein for groups A, B, C, and D inspections (see 4.4.1 through 4.4.4).

4.4.1 Group A inspection. Group A inspection shall be in accordance with table III of MIL-PRF-38535 and as follows:

a. Tests shall be as specified in table II herein.

b. Subgroups 5, 6, and 8 shall be omitted.

c. Special subgroups shall be added to group A inspection and shall consist of group A subgroups 12, 13, and 14 as specified in table III herein. The sample size series for subgroup 12 shall be 5 with no failures allowed, for all classes. The sample size series for subgroup 13 shall be 7 for all classes. The sample size series for subgroup 14 shall be 10 for all classes

d. C_X measurements shall be made only for initial qualification and after process or design changes which may affect capacitance measurements. Capacitance shall be measured between the designated terminal and ground at the frequency of 1 MHz. (See method 3012 of MIL-STD-883). C_{IS} and C_{OS} tests will be measured with the switch off (see 3.5.1).

e. Subgroups 4 and 7 shall be performed for initial qualification only using a sample of 5 devices for each device type submitted to group A inspection, with no failure allowed. If not more than 1 failure is found in the first sample of 5, a second sample of 5 is permitted with no further failures allowed.

4.4.2 Group B inspection. Group B inspection shall be in accordance with table II of MIL-PRF-38535.

4.4.3 Group C inspection. Group C inspection shall be in accordance with table IV of MIL-PRF-38535 and as follows:

a. End point electrical parameters shall be as specified in table II herein.

b. The steady-state life test duration, test condition, and test temperature, or approved alternatives shall be as specified in the device manufacturer's QM plan in accordance with MIL-PRF-38535. The burn-in test circuit shall be maintained under document control by the device manufacturer's Technology Review Board (TRB) in accordance with MIL-PRF-38535 and shall be made available to the acquiring or preparing activity upon request. The test circuit shall specify the inputs, outputs, biases, and power dissipation, as applicable, in accordance with the intent specified in test method 1005 of MIL-STD-883. For device types 03, 04, and 07, life test duration shall be divided equally between forward bias and reverse bias.

c. A special subgroup shall be added to group C inspection for class B devices only, and it shall consist of the group A subgroups 4 and 7 as specified in table III herein. This special subgroup shall be performed on each device type that is qualified from those listed in 1.2.1 herein. After initial qualification, the special subgroup shall be performed periodically on a single device type selected from those device types previously qualified. A sample of 5 devices (of the device type to be inspected) shall be chosen and submitted to test with no failures allowed. If not more than 1 failure is found in the first sample of 5, a second sample of 5 is permitted with no further failures allowed. When more than one device type is qualified, the single device type selected shall be different device type for each subsequent periodic inspection until all qualified device types have been inspected. The sequence of single device types shall be repeated to fulfill the periodic inspection requirement.

4.4.4 Group D inspection. Group D inspection shall be in accordance with table V of MIL-PRF-38535.

a. End point electrical parameters shall be as specified in table II herein.

b. A special subgroup shall be added to group D inspection for class S devices only, and it shall consist of the group A subgroups 4 and 7 as specified in table III herein.

c. A special subgroup shall be added to group D inspection for class S devices only, and it shall consist of the group A subgroups 4 and 7 as specified in table III herein. This special subgroup shall be performed on each device type that is qualified from those listed in 1.2.1 herein. After initial qualification, the special subgroup shall be performed periodically on a single device type selected from those device types previously qualified. When more than one device type is qualified, the single device type selected shall be different device type for each subsequent periodic inspection until all qualified device types have been inspected. The sequence of single device types shall be repeated to fulfill the periodic inspection requirements.

4.5 Methods of inspection. Methods of inspection shall be specified and as follows.

4.5.1 Voltage and current. All voltage values given are referenced to the microcircuit ground terminals. Currents given are conventional current and positive when flowing into the referenced terminal.

DEVICE TYPE 01

CASE A

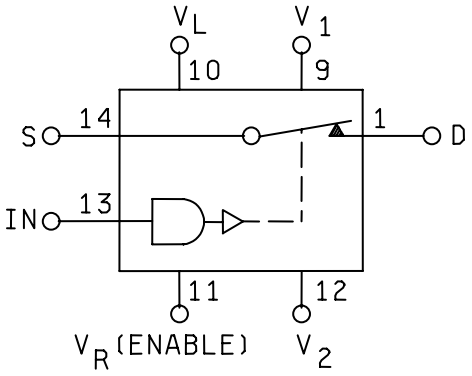

CASE E

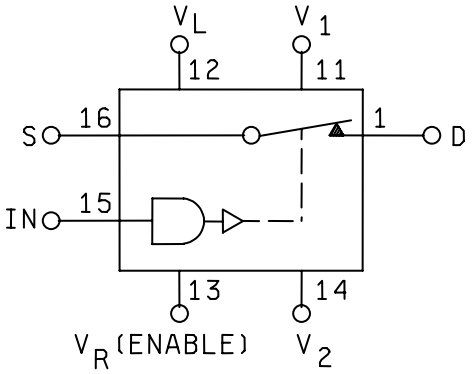

Figure 1. Terminal connection.

DEVICE TYPE 02

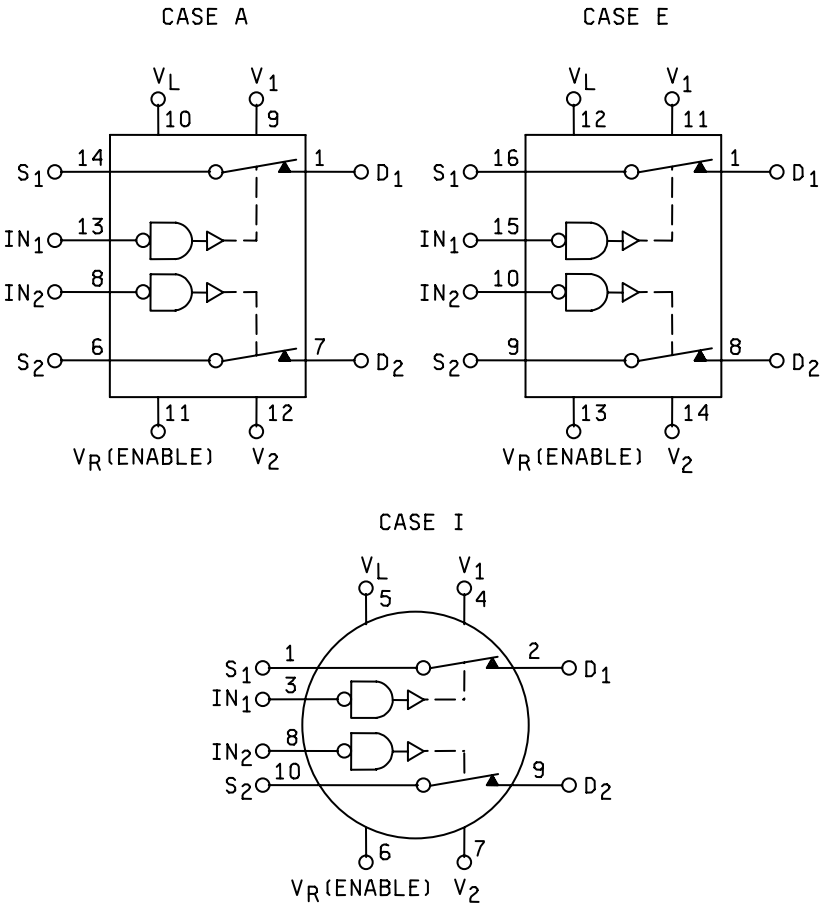

Figure 1. Terminal connection – continued.

DEVICE TYPE 03

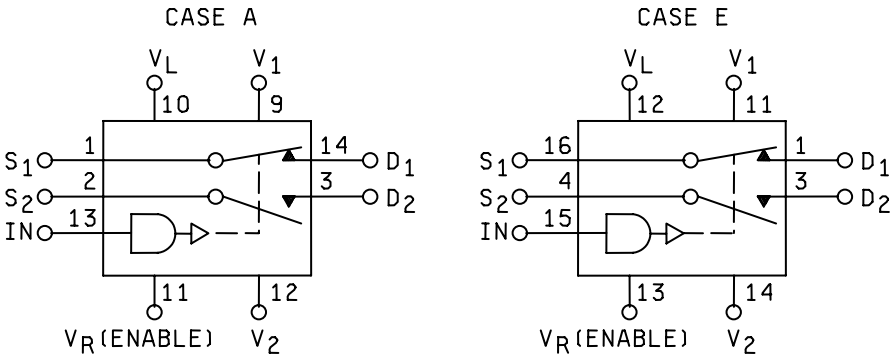

DEVICE TYPE 04

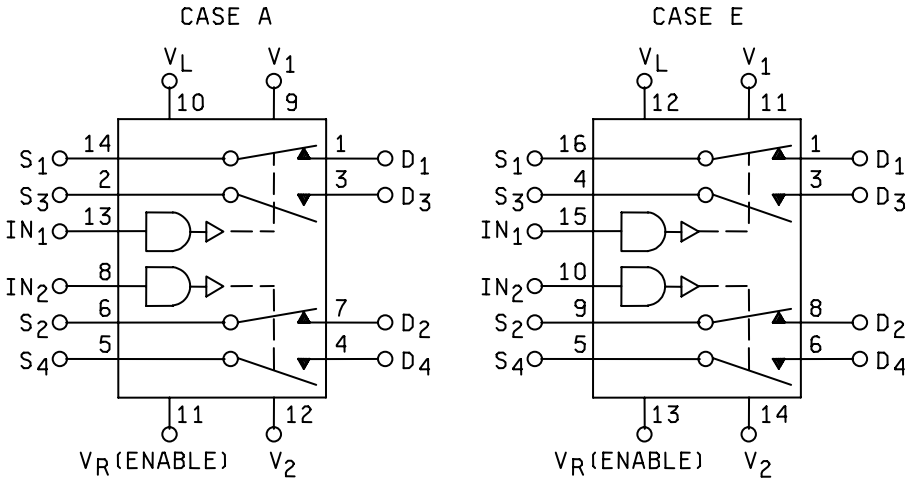

Figure 1. Terminal connections – Continued.

DEVICE TYPE 05

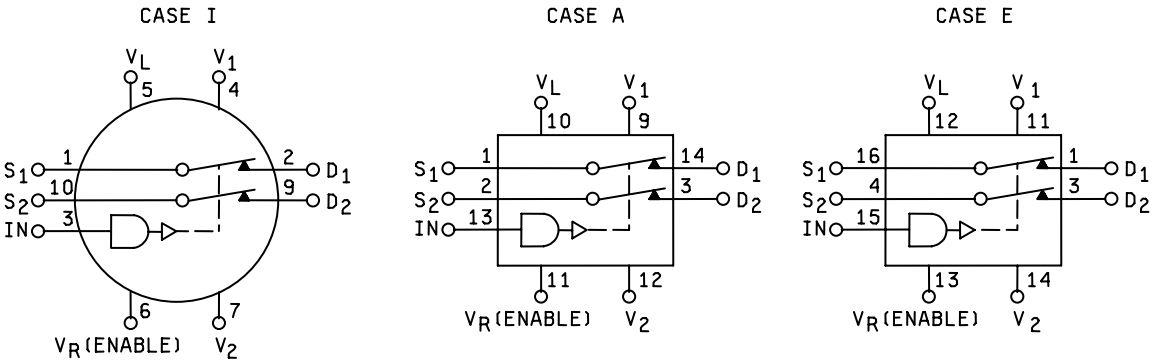

DEVICE TYPE 06

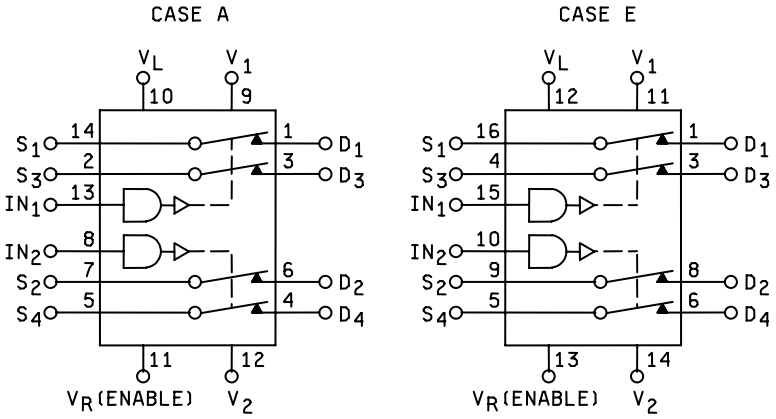

Figure 1. Terminal connections – Continued.

DEVICE TYPE 07

CASE A

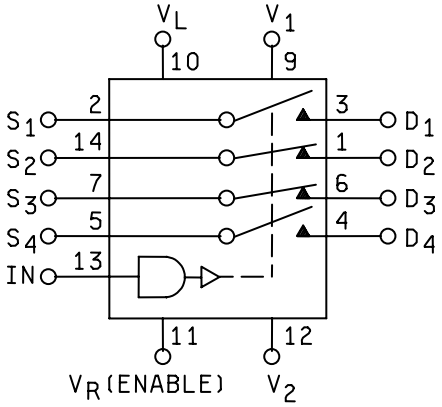

CASE E

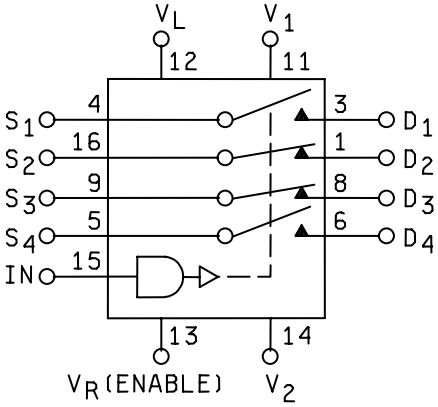

DEVICE TYPE 08

CASE A

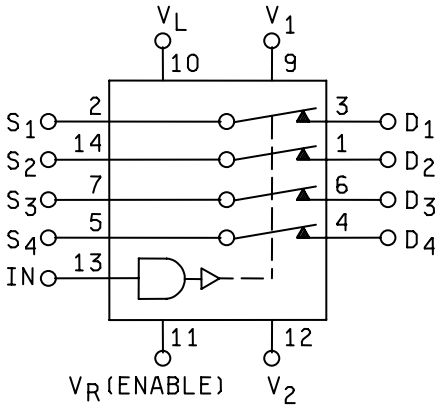

CASE E

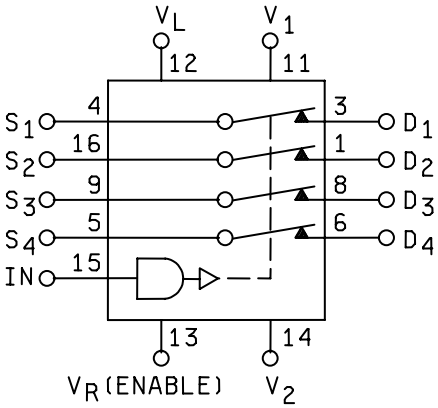

Figure 1. Terminal connections – Continued.

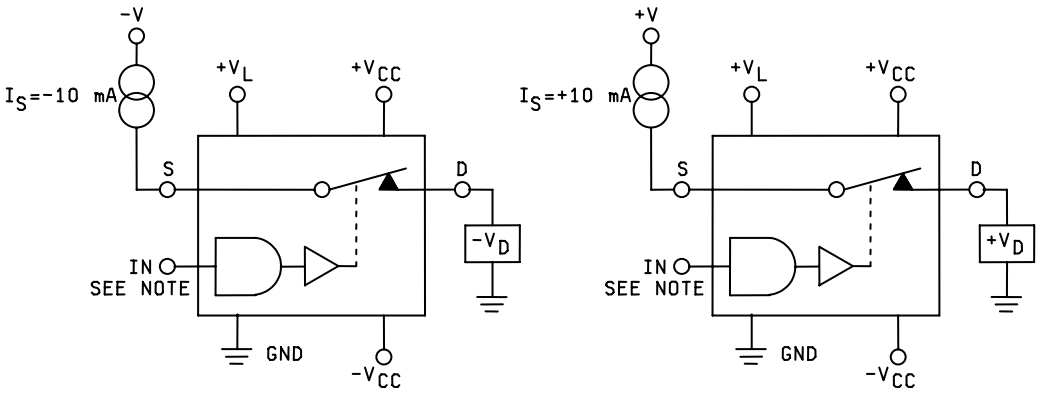

NOTE: V_{IN} from table I, $R_{DS} = (V_S – V_D) / -10$ mA

NOTE: V_{IN} from table I, $R_{DS} = (V_S – V_D) / 10$ mA

Figure 2. R_{DS} test circuit.

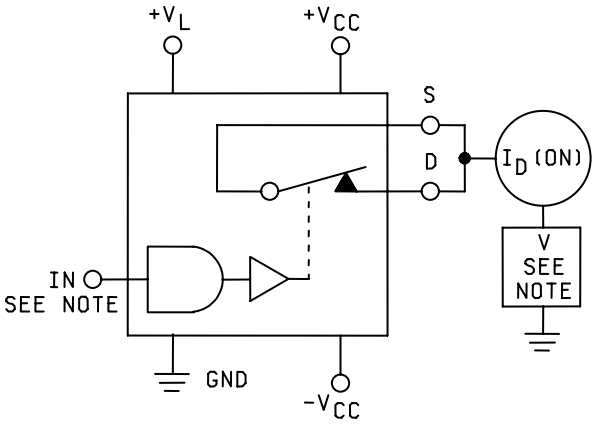

NOTE: Conditions are from table I.

Figure 3. $I_{D(on)}$ test circuit.

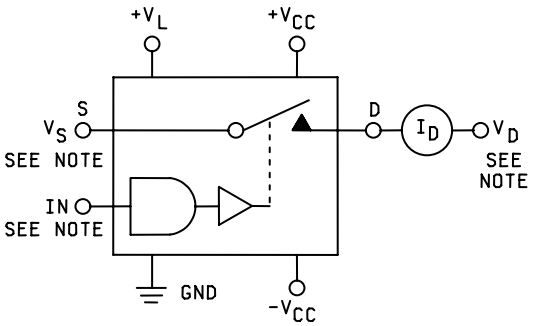

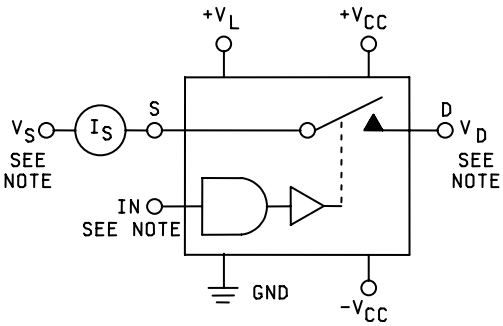

NOTE: Test conditions are from table I.

FIGURE 4. $I_{D(off)}$ test circuit.

FIGURE 5. $I_{S(off)}$ test circuit.

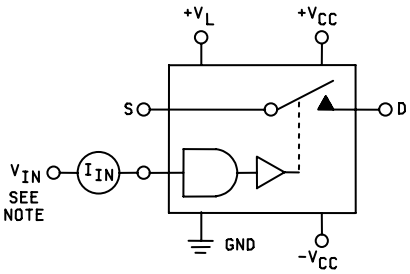

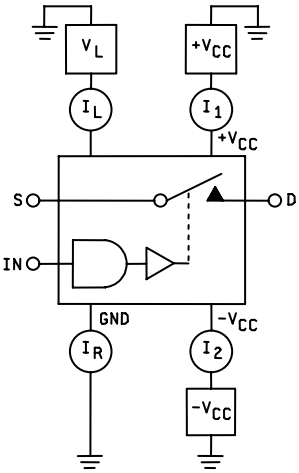

NOTE: Test conditions are from table I.

FIGURE 6. I_{IL}, I_{IH} test circuit.

FIGURE 7. I+, I- test circuit.

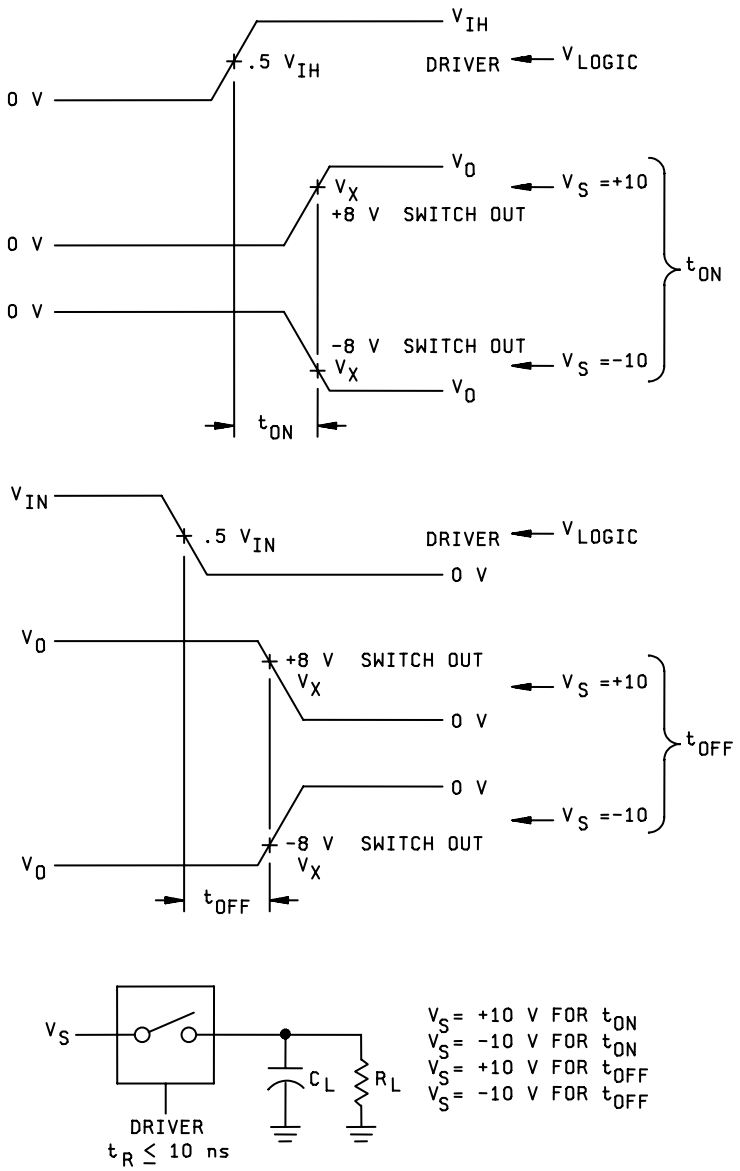

R_L = 1 kΩ ±5 %.

C_L = 95 pF minimum to 200 pF maximum (includes test jig capacitance).

FIGURE 8. Input output waveforms for time delay tests.

NOTES:

1. The logic driver shall have the following characteristics:
   a. V_{LOGIC} = 0 V to +3 V for device types 01 through 08.
   b. Rise time (0.3 V to 2.7 V) $\leq$ 10 ns for device types 01 through 08.
      Fall time (2.7 V to 0.3 V) $\leq$ 10 ns for device types 01 through 08.
2. See 3.5.1 for appropriate switching conditions.
3. V_{SOURCE} (V_S) = +10 V and -10 V for t_{ON}.
   V_{SOURCE} (V_S) = +10 V and -10 V for t_{OFF}.
4. V_X = +8 V for +10 V condition in (3), above.
   V_X = -8 V for -10 V condition in (3), above.

FIGURE 8. Input output waveforms for time delay tests – Continued.

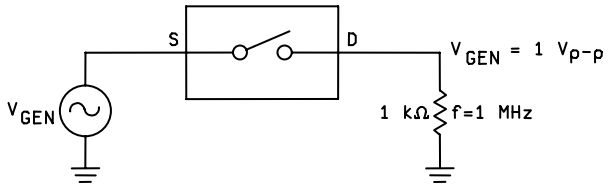

FIGURE 9. Isolation test circuit.

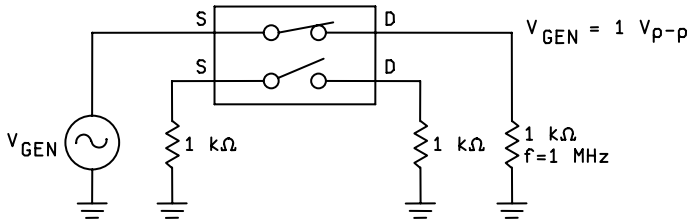

FIGURE 10. Crosstalk test circuit.

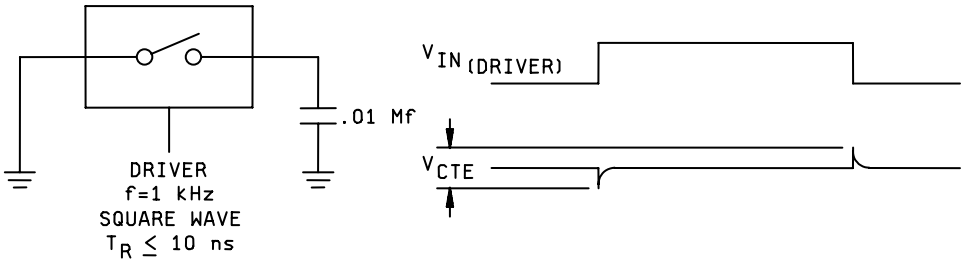

FIGURE 11. Charge transfer error test circuit.

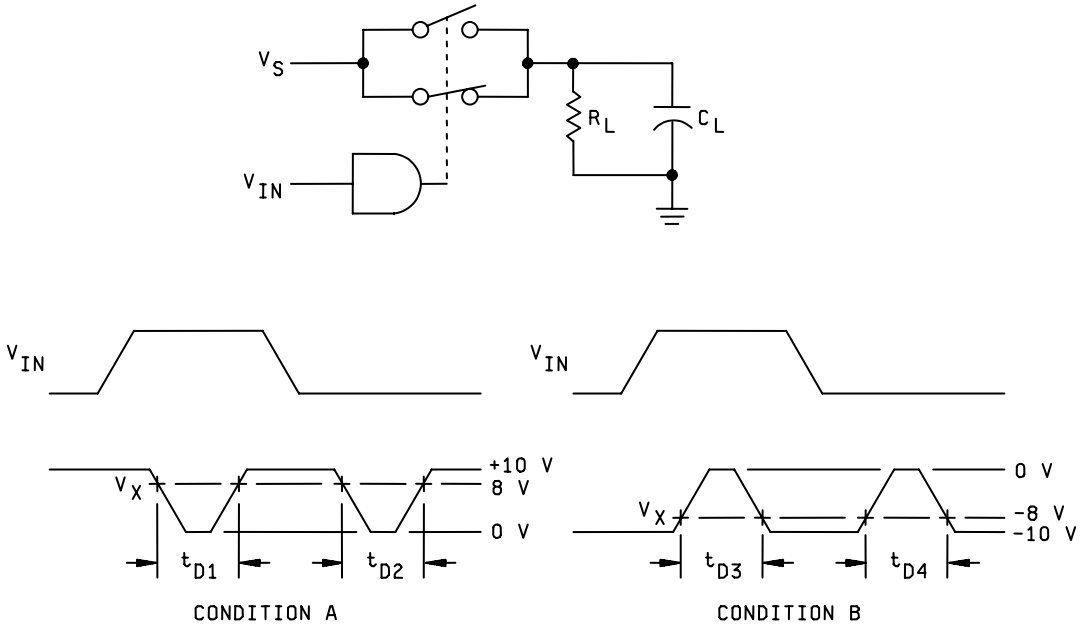

NOTES:

1. R_L = 1 kΩ ±5%, C_L = 95 pF minimum to 200 pF maximum.
2. t_{D1}, t_{D2}, t_{D3}, and t_{D4} shall be measured. These measurements shall apply only to device types 03, 04, and 07. See 3.5.1 for switch conditions.
3. V_{SOURCE} (V_S) = +10 V for condition A (all device types).
   V_{SOURCE} (V_S) = -10 V for condition B (all device types).
4. V_X = +8 V for condition A (all device types).
   V_X = -8 V for condition B (all device types).
5. The logic driver shall have the following characteristics:

   a. V_{LOGIC} = 0 V to 3 V for parts 01 through 08.
   b. Rise time (0.3 V to 2.7 V) ≤ 10 ns, for part types 01 through 08.
      Fall time (2.7 V to 0.3 V) ≤ 10 ns, for part types 01 through 08.

FIGURE 12. Break-before-make test circuit.

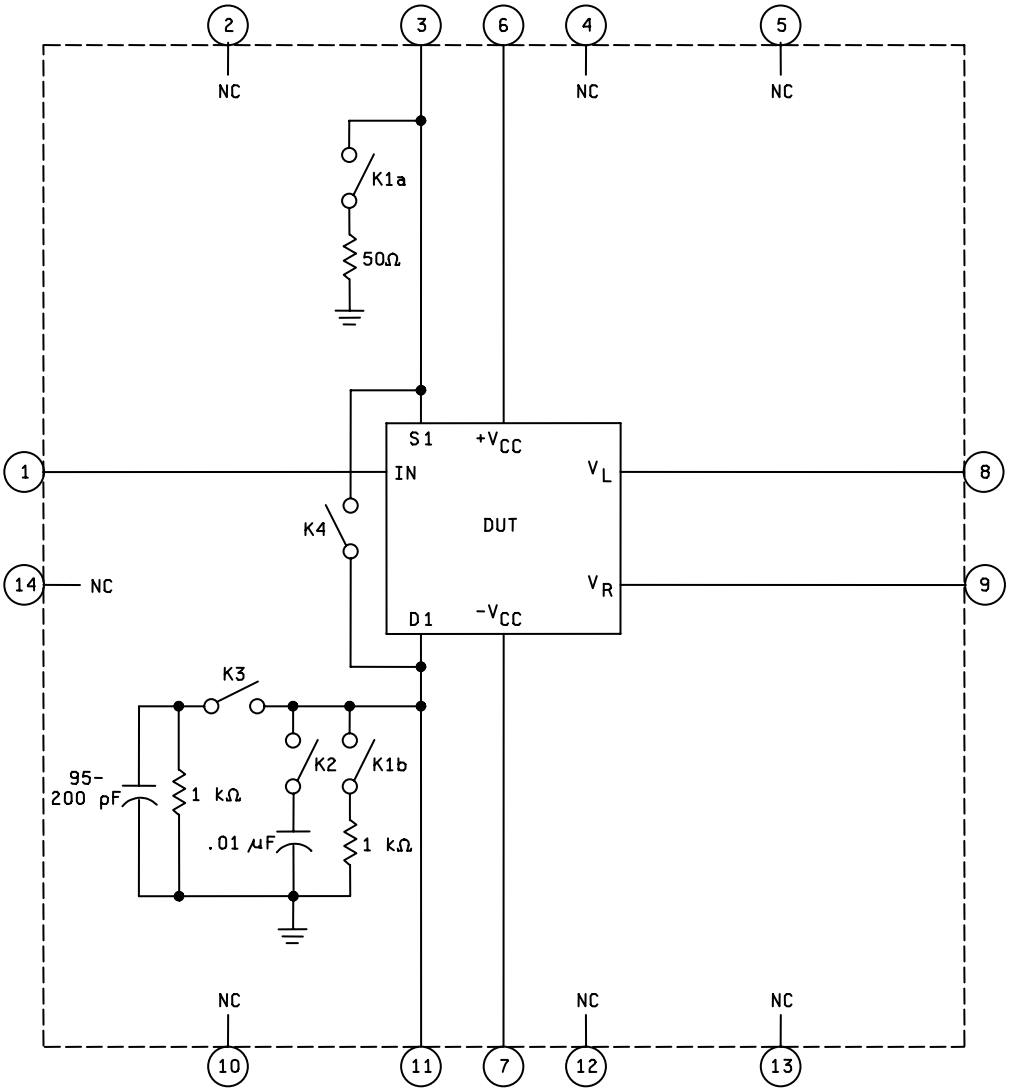

FIGURE 13. Test circuit (static and dynamic tests) for device type 01.

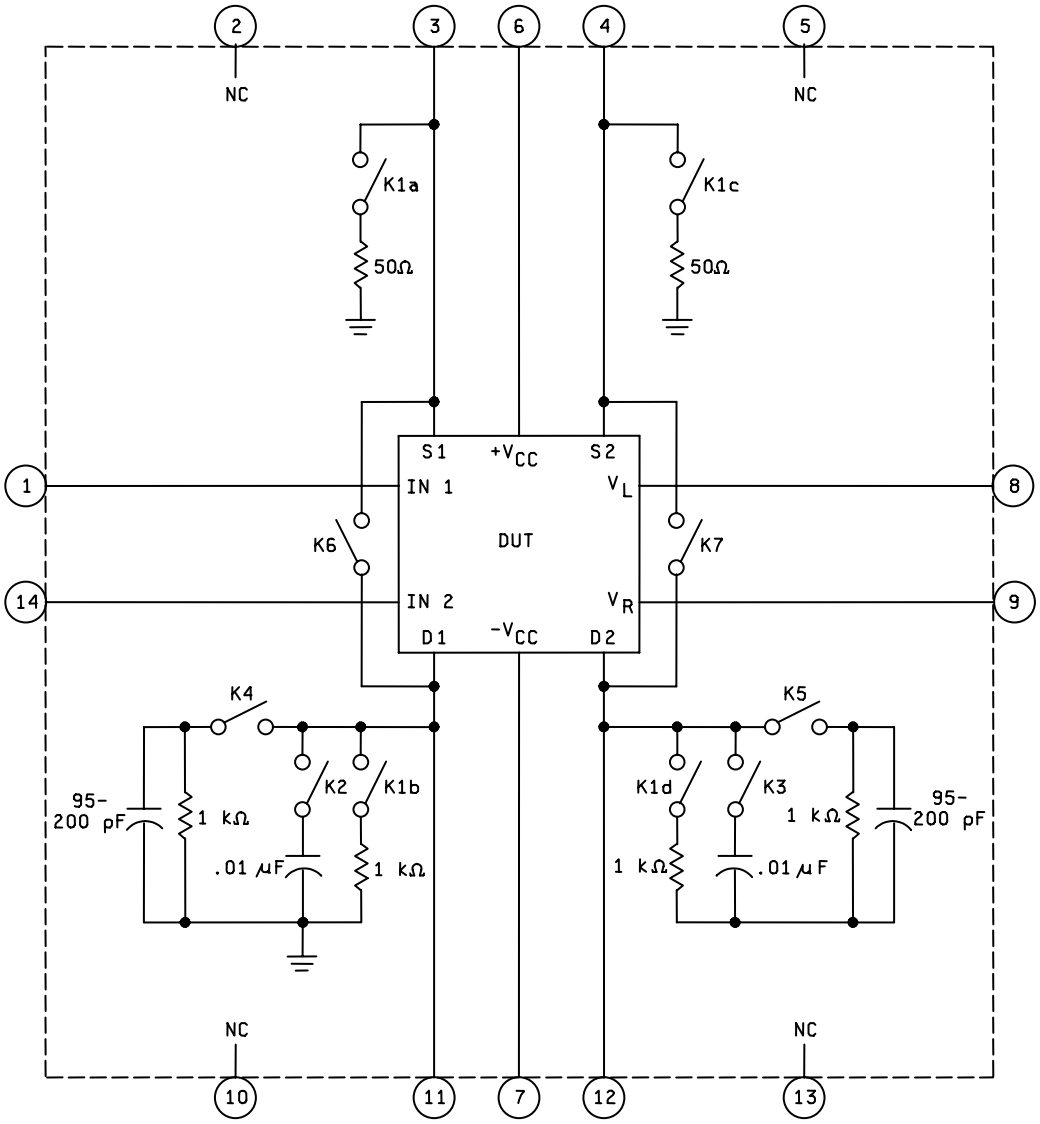

FIGURE 14. Test circuit (static and dynamic tests) for device type 02.

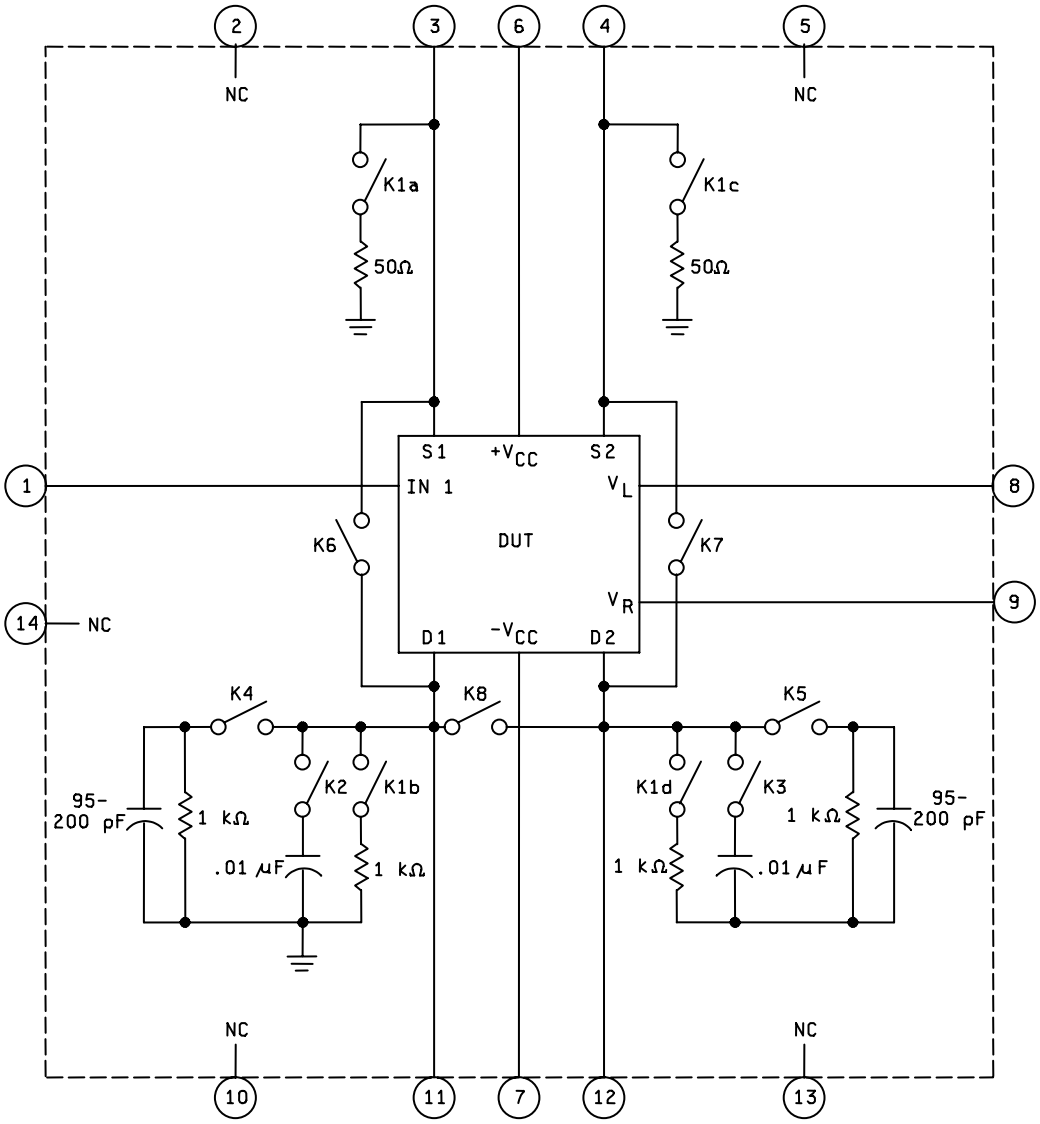

FIGURE 15. Test circuit (static and dynamic tests) for device types 03 and 05.

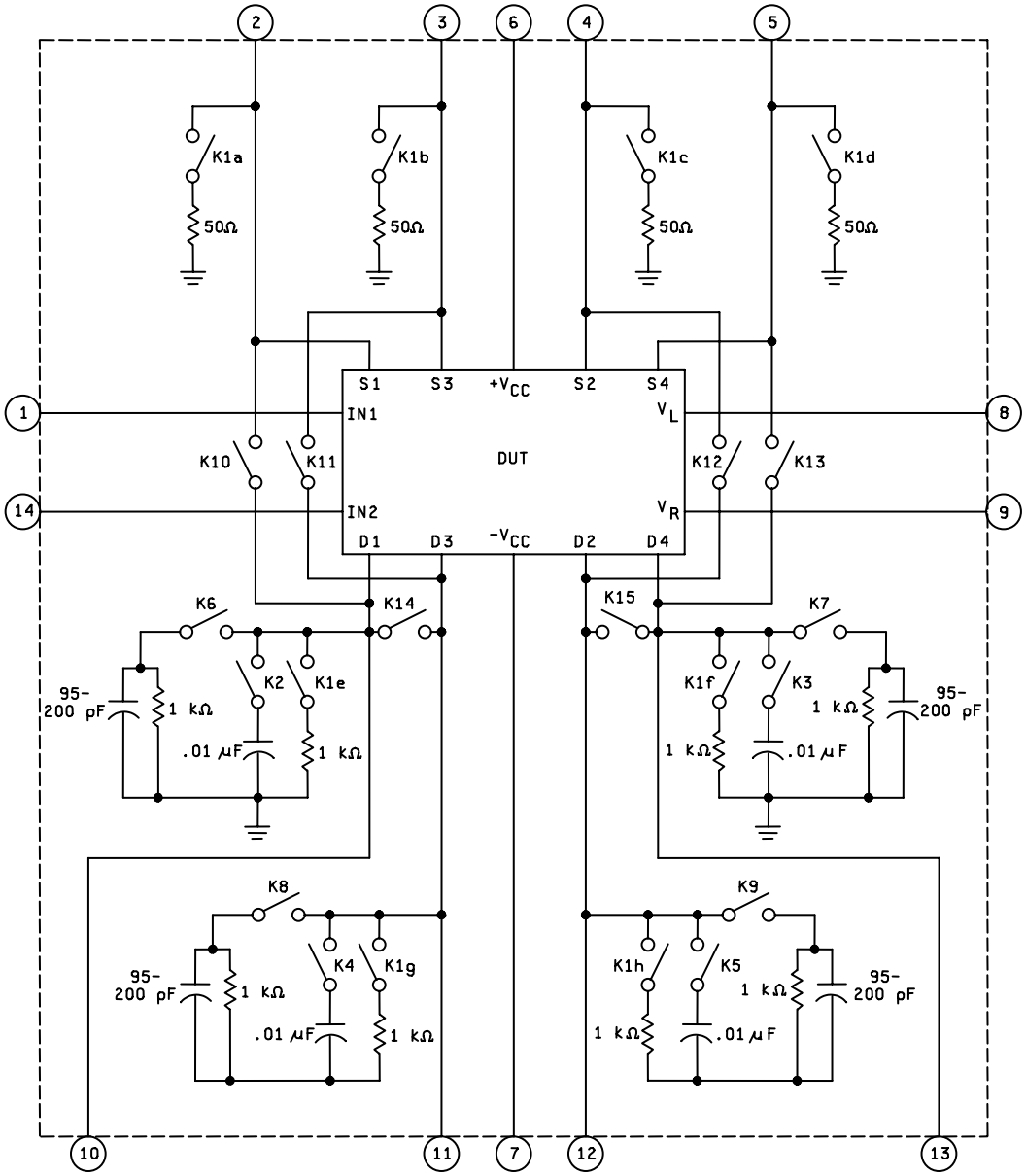

FIGURE 16. Test circuit (static and dynamic tests) for device types 04 and 06.

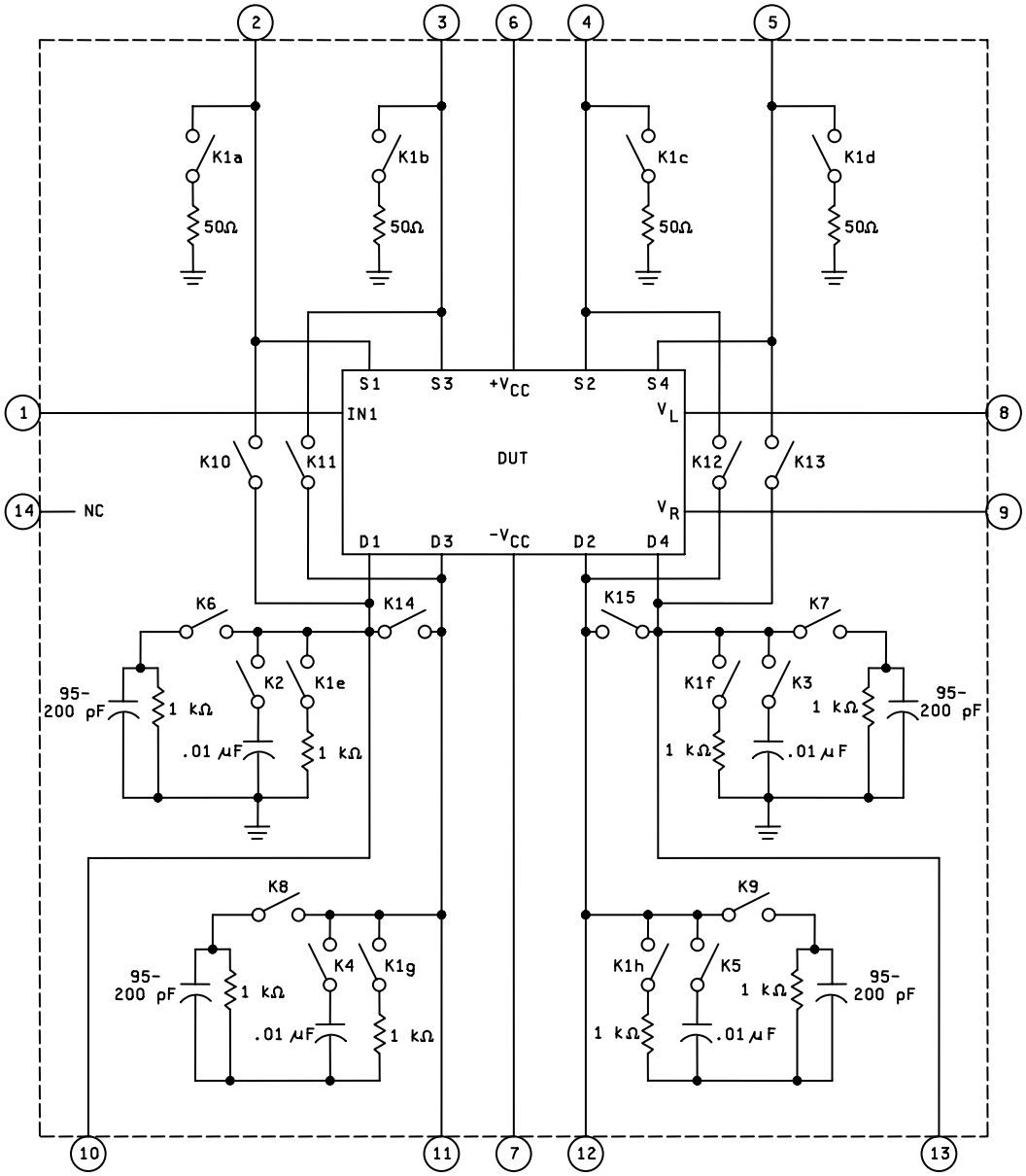

FIGURE 17. Test circuit (static and dynamic tests) for device types 07 and 08.

TABLE III. Group A inspection for device type 01.

Symbol	Test number	Adapter pin number 1/														Relays energized	Measured pin number	Test limits						Unit
		IN	N.C.	S_1	N.C.	N.C.	$+V_{CC}$	$-V_{CC}$	L	R	N.C.	D_1	N.C.	N.C.	N.C.			Subgroup 1 T_A = 25°C		Subgroup 2 T_A = 125°C		Subgroup 3 T_A = -55°C		
		1	2	3	4	5	6	7 V	8 V	9	10	11	12	13	14			Min	Max	Min	Max	Min	Max	
R_{DS}	1	2.4 V		10 mA			15.0 V	-15.0 V	+5.0 V	GND		-10.0 V				None	3		-9.25		-8.50		-9.25	V 2/
"	2	"		-10 mA			15.0 V	-15.0 V	"	"		10.0 V				"	3	9.25		8.50		9.25		"
"	3	"		10 mA			10.0 V	-10. V	"	"		-7.5 V				"	3		-6.75		-6.0		-6.75	"
"	4	"		-10 mA			10.0 V	-10. V	"	"		7.5 V				"	3	6.75		6.0		6.75		"
$I_{D(ON)}$	5	"		10.0 V			15.0 V	-15.0 V	"	"		10.0 V				K4	3	-2	2	-200	200	-200	200	nA
"	6	"		-10.0 V			"	"	"	"		-10.0 V				K4	3	-2	2	-200	200	-200	200	"
$I_{D(OFF)}$	7	0.8 V		-10.0 V			"	"	"	"		10.0 V				None	11	-1	1	-100	100	-100	100	"
"	8	"		10.0 V			"	"	"	"		-10.0 V				"	11	"	"	-100	100	-100	100	"
$I_{S(OFF)}$	9	"		-10.0 V			"	"	"	"		10.0 V				"	3	"	"	-100	100	-100	100	"
"	10	"		10.0 V			"	"	"	"		-10.0 V				"	3	"	"	-100	100	-100	100	"
I_{IL}	11	0.0 V					"	"	"	"						"	1	-1	0	-10	0	-1	0	µA
I_{IH}	12	2.4 V					"	"	"	"						"	1	0	1	0	10	0	1	"
"	13	5.0 V					"	"	"	"						"	1	0	1	0	10	0	1	"
I_{CC}	14	0.0 V					"	"	"	"							6	---	10	---	100	---	10	"
"	15	5.0 V					"	"	"	"							6	---	10	---	100	---	10	"
$-I_{CC}$	16	0.0 V					"	"	"	"							7	-10	---	-100	---	-10	---	"
"	17	5.0 V					"	"	"	"							7	-10	---	-100	---	-10	---	"
$+I_L$	18	0.0 V					"	"	"	"					"		8	---	10	---	100	---	10	"
"	19	5.0 V					"	"	"	"					"		8	---	10	---	100	---	10	"
$+I_R$	20	0.0 V					"	"	"	"					"		9	-10	---	-100	---	-10	---	"
"	21	5.0 V					"	"	"	"					"		9	-10	---	-100	---	-10	---	"
															"			Subgroup 4 T_A = 25°C		Subgroup 7 T_A = 25°C		Subgroup 9 T_A = 25°C		
															"			Min	Max	Min	Max	Min	Max	
V_{CTE}	22	IN 3/					15.0 V	-15.0 V	+5.0 V	GND					"	K2	11	---	15					mV
V_{CT}	23	0.8 V		IN 4/			15.0 V	-15.0 V	+5.0 V	GND						K1	11				3.16			mV_{PP}
					dB_{CT} = -20 log (V_{OUT} / V_{IN})															50				dB
V_{ISO}	24	2.4 V		IN 4/			15.0 V	-15.0 V	+5.0 V	GND						K1	11				3.16			mV_{PP}
					dB_{ISO} = -20 log (V_{OUT} /V_{IN})															50				dB
t_{ON}	25	IN		IN			15.0 V	-15.0 V	+5.0 V	GND		OUT				K3	1 to 11						450	ns
t_{OFF}	26	IN		IN			"	"	"	"		OUT				K3	1 to 11						250	ns
																		Subgroup 10 T_A = 125°C		Subgroup 11 T_A = -55°C		Subgroup 12 T_A = 25°C		
																		Min	Max	Min	Max	Min	Max	
t_{ON}	27	IN		IN			15.0 V	-15.0 V	+5.0 V	GND		OUT				K3	1 to 11		550					ns
t_{OFF}	28	IN		IN			"	"	"	"		OUT				"	"		400					"
t_{ON}	29	IN		IN			"	"	"	"		OUT				"	"				375			"
t_{OFF}	30	IN		IN			"	"	"	"		OUT				"	"				250			"
C_A	31	0.0 V					"	"	"	"						None	1						30	pF
C_{IS}	32						"	"	"	"						"	3						20	"
C_{OS}	33						"	"	"	"						"	11						20	"

See footnotes at end of table.

TABLE III. Group A inspection for device type 02.

Symbol	Test number	Adapter pin number 1/														Relays energized	Measured pin number	Test limits						Unit
		IN1	N.C.	S_1	2	N.C.	$+V_{CC}$	$-V_{CC}$	L	R	N.C.	D_1	2	N.C.	IN2			Subgroup 1 T_A = 25°C		Subgroup 2 T_A = 125°C		Subgroup 3 T_A = -55°C		
		1	2	3 S	4	5	6	7 V	8 V	9	10	11 D	12	13	14			Min	Max	Min	Max	Min	Max	
R_{DS}	1	2.4 V		10 mA			15.0 V	-15.0 V	+5.0 V	GND		-10.0 V				None	3		-9.25		-8.50		-9.25	V 2/
"	2				10 mA		"	"	"	"			-10.0 V		2.4 V	"	4		-9.25		-8.50		-9.25	"
"	3	2.4 V		-10 mA			"	"	"	"		10.0 V				"	3	9.25		8.50		9.25		"
"	4				-10 mA		"	"	"	"			10.0 V		2.4 V	"	4	9.25		8.50		9.25		"
"	5	2.4 V		10 mA			10.0 V	-10.0 V	"	"		-7.5 V				"	3		-6.75		-6.0		-6.75	"
"	6				10 mA		"	"	"	"			-7.5 V		2.4 V	"	4		-6.75		-6.0		-6.75	"
"	7	2.4 V		-10 mA			"	"	"	"		7.5 V				"	3	6.75		6.0		6.75		"
	8				-10 mA		"	"	"	"			7.5 V		2.4 V	"	4	6.75		6.0		6.75		"
$I_{D(ON)}$	9	2.4 V		10.0 V			15.0 V	-15.0 V	"	"		10.0 V				K6	3	-2	2	-200	200	-200	200	nA
"	10				10.0 V		"	"	"	"			10.0 V		2.4 V	K7	4	"	"	"	"	"	"	"
"	11	2.4 V		-10.0 V			"	"	"	"		-10.0 V				K6	3	"	"	"	"	"	"	"
"	12				-10.0 V		"	"	"	"			-10.0 V		2.4 V	K7	4	"	"	"	"	"	"	"
$I_{D(OFF)}$	13	0.8 V		-10.0 V			"	"	"	"		10.0 V				None	11	-1	1	-100	100	-100	100	nA
"	14				-10.0 V		"	"	"	"			10.0 V		0.8 V	"	12	"	"	"	"	"	"	"
"	15	0.8 V		10.0 V			"	"	"	"		-10.0 V				"	11	"	"	"	"	"	"	"
"	16				10.0 V		"	"	"	"			-10.0 V		0.8 V	"	12	"	"	"	"	"	"	"
$I_{S(OFF)}$	17	0.8 V		-10.0 V			"	"	"	"		10.0 V				None	3	-1	1	-100	100	-100	100	nA
"	18				-10.0 V		"	"	"	"			10.0 V		0.8 V	"	4	"	"	"	"	"	"	"
"	19	0.8 V		10.0 V			"	"	"	"		-10.0 V				"	3	"	"	"	"	"	"	"
"	20				10.0 V		"	"	"	"			-10.0 V		0.8 V	"	4	"	"	"	"	"	"	"
I_{IL}	21	0.0 V					"	"	"	"						"	1	-1	0	-10	0	-1	0	µA
"	22						"	"	"	"					0.0 V	"	14	-1	0	-10	0	-1	0	"
I_{IH}	23	2.4 V					"	"	"	"						"	1	0	1	0	10	0	1	"
"	24						"	"	"	"					2.4 V	"	14	0	1	0	10	0	1	"
"	25	5.0 V					"	"	"	"						"	1	0	1	0	10	0	1	"
"	26						"	"	"	"					5.0 V	"	14	0	1	0	10	0	1	"
$+I_{CC}$	27	0.0 V					"	"	"	"					0.0 V	"	6	---	10	---	100	---	10	"
"	28	5.0 V					"	"	"	"					5.0 V	"	6	---	10	---	100	---	10	"
$-I_{CC}$	29	0.0 V					"	"	"	"					0.0 V	"	7	-10	---	-100	---	-10	---	"
"	30	5.0 V					"	"	"	"					5.0 V	"	7	-10	---	-100	---	-10	---	"
$+I_L$	31	0.0 V					"	"	"	"					0.0 V	"	8	---	10	---	100	---	10	"
"	32	5.0 V					"	"	"	"					5.0 V	"	8	---	10	---	100	---	10	"
$+I_R$	33	0.0 V					"	"	"	"					0.0 V	"	9	-10	---	-100	---	-10	---	"
"	34	5.0 V					"	"	"	"					5.0 V	"	9	-10	---	-100	---	-10	---	"
																		Subgroup 4 T_A = 25°C		Subgroup 7 T_A = 25°C		Subgroup 9 T_A = 25°C		
																		Min	Max	Min	Max	Min	Max	
V_{CTE}	35	IN 3/					15.0 V	-15.0 V	+5.0 V	GND						K2	11	---	15					mV
"	36						"	"	"	"					IN 3/	K3	12	---	15					"
V_{CT}	37	0.8 V					15.0 V	-15.0 V	+5.0 V	GND					2.4 V	K1	12				3.16			mV_{PP}
"		dB_{CT} = -20 log (V_{OUT} / V_{IN})																		50				dB
V_{ISO}	38	2.4 V		IN 4/			15.0 V	-15.0 V	+5.0 V	GND						K1	11				3.16			mV_{PP}
"	39				IN 4/		15.0 V	-15.0 V	+5.0 V	GND					2.4 V	K1	12				3.16			"
		dB_{ISO} = -20 log (V_{OUT} / V_{IN})																		50				dB
t_{ON}	40	IN		IN			15.0 V	-15.0 V	+5.0 V	GND		OUT				K4	1 to 11						450	ns
"	41				IN		"	"	"	"			OUT		IN	K5	14 to 12						450	"
t_{OFF}	42	IN		IN			"	"	"	"		OUT				K4	1 to 11						250	ns
"	43				IN		"	"	"	"			OUT		IN	K5	14 to 12						250	"

See footnotes at end of table.

TABLE III. Group A inspection for device type 02. – Continued.

Symbol	Test number	Adapter pin number 1/														Relays energized	Measured pin number	Test limits						Unit
			N.C.	S_1	2	N.C.	$+V_{CC}$	$-V_{CC}$	L	R	N.C.	D_1	2	N.C.	IN2			Subgroup 10 T_A = 125°C		Subgroup 11 T_A = -55°C		Subgroup 12 T_A = 25°C		
		1	2	3	4	5	6	7	8	9	10	11	12	13	14			Min	Max	Min	Max	Min	Max	
t_{ON}	44	IN1 IN		IN S			15.0 V	-15.0 V	+5.0 V V	GND		OUT D				K4	1 to 11	---	550					ns
"	45				IN		"	"	"	"			OUT		IN	K5	14 to 12	---	550					"
t_{OFF}	46	IN		IN			"	"	"	"		OUT				K4	1 to 11	---	400					"
"	47				IN		"	"	"	"			OUT		IN	K5	14 to 12	---	400					"
t_{ON}	48	IN		IN			"	"	"	"		OUT				K4	1 to 11			---	375			"
"	49				IN		"	"	"	"			OUT		IN	K5	14 to 12			---	375			"
t_{OFF}	50	IN		IN			"	"	"	"		OUT				K4	1 to 11			---	250			"
"	51				IN		"	"	"	"			OUT		IN	K5	14 to 12			---	250			"
C_A	52	0.0 V					"	"	"	"						None	1					---	30	pF
"	53						"	"	"	"					0.0 V	"	14					---	30	"
C_{IS}	54						"	"	"	"						"	3					---	20	"
"							"	"	"	"						"	4					---	20	"
C_{OS}	56						"	"	"	"						"	11					---	20	"
"	57						"	"	"	"						"	12					---	20	"

55

See notes at end of table.

TABLE III. Group A inspection for device types 03, 05.

Symbol	Test number		Adapter pin number 1/														Relays energized	Measured pin number	Test limits						Unit
			IN	N.C.	S_1	2	N.C.	$+V_{CC}$	$-V_{CC}$	L	R	N.C.	D_1	2	N.C.	N.C.			Subgroup 1 T_A = 25°C		Subgroup 2 T_A = 125°C		Subgroup 3 T_A = -55°C		
		1 6/	1 7/	2	3	4	5	6	7	8	9	10	11	12	13	14			Min	Max	Min	Max	Min	Max	
R_{DS}	1	0.8 V	2.4 V		10 mA	10 mA		15.0 V	-15.0 V	+5.0 V	GND			-10.0 V			None	4		-9.25		-8.50		-9.25	V 2/
"	2	2.4 V	"		10 mA			"	"	"	"		-10.0 V				"	3		-9.25		-8.50		-9.25	"
"	3	0.8 V	"			-10 mA		"	"	"	"			10.0 V			"	4	9.25		8.50		9.25		"
"	4	2.4 V	"		-10 mA			"	"	"	"		10.0 V				"	3	9.25		8.50		9.25		"
"	5	0.8 V	"			10 mA		10.0 V	-10.0 V	"	"			-7.5 V			"	4		-6.75		-6.0		-6.75	"
"	6	2.4 V	"		10 mA			"	"	"	"		-7.5 V				"	3		-6.75		-6.0		-6.75	"
"	7	0.8 V	"			-10 mA		"	"	"	"			7.5 V			"	4	6.75		6.0		6.75		"
"	8	2.4 V	"		-10 mA			"	"	"	"		7.5 V				"	3	6.75		6.0		6.75		"
$I_{D(ON)}$	9	0.8 V	"			10.0 V		15.0 V	-15.0 V	"	"			10.0 V			K7	4	-2	2	-200	200	-200	200	nA
"	10	2.4 V	"		10.0 V			"	"	"	"		10.0 V				K6	3	"	"	"	"	"	"	"
"	11	0.8 V	"			-10.0 V		"	"	"	"			-10.0 V			K7	4	"	"	"	"	"	"	"
"	12	2.4 V	"		-10.0 V			"	"	"	"		-10.0 V				K6	3	"	"	"	"	"	"	"
$I_{D(OFF)}$	13	0.8 V	0.8 V		-10.0 V			"	"	"	"		10.0 V				None	11	-1	1	-100	100	-100	100	nA
"	14	2.4 V	"			-10.0 V		"	"	"	"			10.0 V			"	12	"	"	"	"	"	"	"
"	15	0.8 V	"		10.0 V			"	"	"	"		-10.0 V				"	11	"	"	"	"	"	"	"
"	16	2.4 V	"			10.0 V		"	"	"	"			-10.0 V			"	12	"	"	"	"	"	"	"
$I_{S(OFF)}$	17	0.8 V	"		-10.0 V			"	"	"	"		10.0 V				None	3	-1	1	-100	100	-100	100	nA
"	18	2.4 V	"			-10.0 V		"	"	"	"			10.0 V			"	4	"	"	"	"	"	"	"
"	19	0.8 V	"		10.0 V			"	"	"	"		-10.0 V				"	3	"	"	"	"	"	"	"
"	20	2.4 V	"			10.0 V		"	"	"	"			-10.0 V			"	4	"	"	"	"	"	"	"
I_{IL}	21	0.0 V	0.0 V					"	"	"	"						"	1	-1	0	-10	0	-1	0	µA
I_{IH}	22	2.4 V	2.4 V					"	"	"	"						"	1	0	1	0	10	0	1	"
"	23	5.0 V	5.0 V					"	"	"	"						"	1	0	1	0	10	0	1	"
$+I_{CC}$	24	0.0 V	0.0 V					"	"	"	"						"	6	---	10	---	100	---	10	"
"	25	5.0 V	5.0 V					"	"	"	"						"	6	---	10	---	100	---	10	"
$-I_{CC}$	26	0.0 V	0.0 V					"	"	"	"						"	7	-10	---	-100	---	-10	---	"
"	27	5.0 V	5.0 V					"	"	"	"						"	7	-10	---	-100	---	-10	---	"
$+I_L$	28	0.0 V	0.0 V					"	"	"	"						"	8	---	10	---	100	---	10	"
"	29	5.0 V	5.0 V					"	"	"	"						"	8	---	10	---	100	---	10	"
$+I_R$	30	0.0 V	0.0 V					"	"	"	"						"	9	-10	---	-100	---	-10	---	"
"	31	5.0 V	5.0 V					"	"	"	"						"	9	-10	---	-100	---	-10	---	"

See footnotes at end of table.

TABLE III. Group A inspection for device types 03, 05 – Continued.

Symbol	Test number	Adapter pin number 1/														Relays energized	Measured pin number	Test limits						Unit
			N.C.	S_1	2	N.C.	$+V_{CC}$	$-V_{CC}$	L	R	N.C.	D_1	2	N.C.	NC			Subgroup 4 T_A = 25°C		Subgroup 7 T_A = 25°C		Subgroup 9 T_A = 25°C		
		1	2	3	4	5	6	7	8	9	10	11	12	13	14			Min	Max	Min	Max	Min	Max	
V_{CTE}	32 IN	IN 3/		GND			15.0 V	-15.0 V	+5.0 V	GND						K2	11	---	15					mV
"	33	IN 3/		S	GND		"	"	" V	"		D				K3	12	---	15					"
V_{CT}	34	2.4 V		IN 4/												K1	12				3.16			mV_{PP}
					dB_{CT} = 20 log (V_{OUT} / V_{IN})															50				dB
V_{ISO}	35	2.4 V			IN 4/		15.0 V	-15.0 V	+5.0 V	GND						K1	12				3.16			mV_{PP}
"	36	0.8 V		IN 4/			15.0 V	-15.0 V	+5.0 V	GND						K1	11				3.16			"
					dB_{ISO} = -20 log (V_{OUT} / V_{IN})															50				dB
t_{ON}	37	IN		IN			15.0 V	-15.0 V	+5.0 V	GND		OUT				K4	11						450	ns
"	38	"			IN		"	"	"	"			OUT			K5	12						450	"
t_{OFF}	39	IN		IN			"	"	"	"		OUT				K4	11						250	"
"	40	"			IN		"	"	"	"			OUT			K5	12						250	"
																		Subgroup 10 T_A = 125°C		Subgroup 11 T_A = -55°C		Subgroup 12 T_A = 25°C		
																		Min	Max	Min	Max	Min	Max	
t_{ON}	41	IN		IN			15.0 V	-15.0 V	+5.0 V	GND		OUT				K4	11	---	550					ns
"	42	"			IN		"	"	"	"			OUT			K5	12	---	550					"
t_{OFF}	43	IN		IN			"	"	"	"		OUT				K4	11	---	400					"
"	44	"			IN		"	"	"	"			OUT			K5	12	---	400					"
t_{ON}	45	IN		IN			"	"	"	"		OUT				K4	11			---	375			"
"	46	"			IN		"	"	"	"			OUT			K5	12			---	375			"
t_{OFF}	47	IN		IN			"	"	"	"		OUT				K4	11			---	250			"
"	48	"			IN		"	"	"	"			OUT			K5	12			---	250			"
C_A	49	0.0 V					"	"	"	"						None	1					---	30	pF
C_{IS}	50						"	"	"	"						"	3					---	20	"
"	51						"	"	"	"						"	4					---	20	"
C_{OS}	52						"	"	"	"						"	11					---	20	"
"	53						"	"	"	"						"	12					---	20	"
																		Subgroup 13 T_A = 25°C		Subgroup 14 T_A = 125°C		Subgroup 14 T_A = -55°C		
																		Min	Max	Min	Max	Min	Max	
t_{D} 5/	54	IN		IN	IN		15.0 V	-15.0 V	+5.0 V	GND						K4, K8	11	20	---					ns
	55	"		"	"		"	"	"	"						"	12	20	---					"
t_{D} 5/	56	"			"			"	"	"						"	11			20	---			"
	57	"			"			"	"	"						"	12			20	---			"
t_{D} 5/	58	"			"			"	"	"						"	11					20	---	"
	59	"			"			"	"	"						"	12					20	---	"

See notes at end of table.

TABLE III. Group A inspection for device types 04, 06.

Symbol	Test number	Adapter pin number 1/																Relays energized	Measured pin	Test limits						Unit
			IN1	S_1	3	2	4	$+V_{CC}$	$-V_{CC}$	L	R	1	3	2	4	IN2	IN2			Subgroup 1 $T_A = 25°C$		Subgroup 2 $T_A = 125°C$		Subgroup 3 $T_A = -55°C$		
		1 8/	1 9/	2	3	4	5	6	7	8	9	10	11	12	13	14 8/	14 9/		number	Min	Max	Min	Max	Min	Max	
R_{DS}	1	2.4 V	2.4 V	10.0 mA	S	S		15.0 V	-15.0 V	+5.0 V	GND	-10.0 V	D	D				None	2		-9.25		-8.50		-9.25	V 2/
"	2	2.4 V	0.8 V		10.0 mA			"					-10.0 V					"	3		-9.25		-8.50		-9.25	"
"	3					10.0 mA		"	"	"				-10.0 V		2.4 V	2.4 V	"	4		-9.25		-8.50		-9.25	"
"	4						10.0 mA	"	"	"					-10.0 V	2.4 V	0.8 V	"	5		-9.25		-8.50		-9.25	"
"	5	2.4 V	2.4 V	-10.0 mA				"	"	"	"	10.0 V						"	2	9.25		8.50		9.25		"
"	6	2.4 V	0.8 V		-10.0 mA			"	"	"	"		10.0 V					"	3	9.25		8.50		9.25		"
"	7					-10.0 mA		"	"	"				10.0 V		2.4 V	2.4 V	"	4	9.25		8.50		9.25		"
"	8						-10.0 mA	"	"	"	"				10.0 V	2.4 V	0.8 V	"	5	9.25		8.50		9.25		"
"	9	2.4 V	2.4 V	10.0 mA				10.0 V	-10.0 V	"	"	-7.5 V						"	2		-6.75		-6.0		-6.75	"
"	10	2.4 V	0.8 V		10.0 mA			"					-7.5 V					"	3		-6.75		-6.0		-6.75	"
"	11					10.0 mA		"	"	"				-7.5 V		2.4 V	2.4 V	"	4		-6.75		-6.0		-6.75	"
"	12						10.0 mA	"	"	"					-7.5 V	2.4 V	0.8 V	"	5		-6.75		-6.0		-6.75	"
"	13	2.4 V	2.4 V	-10.0 mA				"	"	"	"	7.5 V						"	2	6.75		6.0		6.75		"
"	14	2.4 V	0.8 V		-10.0 mA			"					7.5 V					"	3	6.75		6.0		6.75		"
"	15					-10.0 mA		"	"	"				7.5 V		2.4 V	2.4 V	"	4	6.75		6.0		6.75		"
"	16						-10.0 mA	"	"	"					7.5 V	2.4 V	0.8 V	"	5	6.75		6.0		6.75		"
$I_{D(ON)}$	17	2.4 V	2.4 V	10.0 V				15.0 V	-15.0 V	"	"	10.0 V						K10	2	-2	2	-200	200	-200	200	nA
"	18	2.4 V	0.8 V		10.0 V			"	"	"	"		10.0 V					K11	3	"	"	"	"	"	"	"
"	19					10.0 V		"	"	"	"			10.0 V		2.4 V	2.4 V	K12	4	"	"	"	"	"	"	"
"	20						10.0 V	"	"	"	"				10.0 V	2.4 V	0.8 V	K13	5	"	"	"	"	"	"	"
"	21	2.4 V	2.4 V	-10.0 V				"	"	"	"	-10.0 V						K10	2	"	"	"	"	"	"	"
"	22	2.4 V	0.8 V		-10.0 V			"					-10.0 V					K11	3	"		"	"	"		"
"	23					-10.0 V		"	"	"				-10.0 V		2.4 V	2.4 V	K12	4	"		"	"	"		"
"	24						-10.0 V	"	"	"					-10.0 V	2.4 V	0.8 V	K13	5	"		"	"	"		"
$I_{D(OFF)}$	25	0.8 V	0.8 V	-10.0 V				"	"	"	"	10.0 V						None	10	-1	1	-100	100	-100	100	nA
"	26	0.8 V	2.4 V		-10.0 V			"	"	"	"		10.0 V					"	11	"	"	"	"	"	"	"
"	27					-10.0 V		"	"	"	"			10.0 V		0.8 V	0.8 V	"	12	"	"	"	"	"	"	"
"	28						-10.0 V	"	"	"	"				10.0 V	0.8 V	2.4 V	"	13	"	"	"	"	"	"	"
"	29	0.8 V	0.8 V	10.0 V				"	"	"	"	-10.0 V						"	10	"	"	"	"	"	"	"
"	30	0.8 V	2.4 V		10.0 V			"					-10.0 V					"	11	"		"	"	"		"
"	31					10.0 V		"	"	"				-10.0 V		0.8 V	0.8 V	"	12	"		"	"	"		"
"	32						10.0 V	"	"	"					-10.0 V	0.8 V	2.4 V	"	13	"		"	"	"		"
$I_{S(OFF)}$	33	0.8 V	0.8 V	-10.0 V				15.0 V	-15.0 V	+5.0 V	GND	10.0 V						None	2	-1	1	-100	100	-100	100	nA
"	34	0.8 V	2.4 V		-10.0 V			"	"	"	"		10.0 V					"	3	"	"	"	"	"	"	"
"	35					-10.0 V		"	"	"	"			10.0 V		0.8 V	0.8 V	"	4	"	"	"	"	"	"	"
"	36						-10.0 V	"	"	"	"				10.0 V	0.8 V	2.4 V	"	5	"	"	"	"	"	"	"
"	37	0.8 V	0.8 V	10.0 V				"	"	"	"	-10.0 V						"	2	"	"	"	"	"	"	"
"	38	0.8 V	2.4 V		10.0 V			"					-10.0 V					"	3	"		"	"	"		"
"	39					10.0 V		"	"	"				-10.0 V		0.8 V	0.8 V	"	4	"		"	"	"		"
"	40						10.0 V	"	"	"					-10.0 V	0.8 V	2.4 V	"	5	"		"	"	"		"
I_{IL}	41	0.0 V	0.0 V					"	"	"	"							"	1	-1	0	-10	0	-1	0	µA
"	42							"	"	"	"					0.0 V	0.0 V	"	14	-1	0	-10	0	-1	0	"
I_{IH}	43	2.4 V	2.4 V					"	"	"	"							"	1	0	1	0	10	0	1	"
"	44							"	"	"	"					2.4 V	2.4 V	"	14	0	1	0	10	0	1	"
"	45	5.0 V	5.0 V					"	"	"	"							"	1	0	1	0	10	0	1	"
"	46							"	"	"	"					5.0 V	5.0 V	"	14	0	1	0	10	0	1	"
$+I_{CC}$	47	0.0 V	0.0 V					"	"	"	"					0.0 V	0.0 V	"	6	---	10	---	100	---	10	"
"	48	5.0 V	5.0 V					"	"	"	"					5.0 V	5.0 V	"	6	---	10	---	100	---	10	"
$-I_{CC}$	49	0.0 V	0.0 V					"	"	"	"					0.0 V	0.0 V	"	7	-10	---	-100	---	-10	---	"
"	50	5.0 V	5.0 V					"	"	"	"					5.0 V	5.0 V	"	7	-10	---	-100	---	-10	---	"
$+I_L$	51	0.0 V	0.0 V					"	"	"	"					0.0 V	0.0 V	"	8	---	10	---	100	---	10	"
"	52	5.0 V	5.0 V					"	"	"	"					5.0 V	5.0 V	"	8	---	10	---	100	---	10	"
$+I_R$	53	0.0 V	0.0 V					"	"	"	"					0.0 V	0.0 V	"	9	-10	---	-100	---	-10	---	"
"	54	5.0 V	5.0 V					"	"	"	"					5.0 V	5.0 V	"	9	-10	---	-100	---	-10	---	"

See footnotes at end of table.

TABLE III. Group A inspection for device types 04, 06 – Continued.

Symbol	Test number	Adapter pin number 1/														Relays energized	Measured pin number	Test limits						Unit
			S_1	3	2	4	$+V_{CC}$	$-V_{CC}$	L	R	1	3	2	4	IN2			Subgroup 4 T_A = 25°C						
		1	2	3	4	5	6	7	8	9	10	11	12	13	14			Min	Max					
V_{CTE}	55	IN 3/	GND	S	S		15.0 V	-15.0 V	+5.0 V	GND	D	D	D			K2	10		15					mV
"	56	IN 3/	S	GND			"	"	"	"						K4	11		"					"
"	57				GND		"	"	"	"					IN 3/	K5	12							"
"	58					GND	"	"	"	"					IN 3/	K3	13							"
																		Subgroup 7 T_A = 25°C		Subgroup 9 T_A = 25°C		Subgroup 10 T_A = 125°C		
																		Min	Max	Min	Max	Min	Max	
V_{CT}	59	2.4 V	IN 4/				15.0 V	-15.0 V	+5.0 V	GND						K1	12	"	3.16					mV_{PP}
"	60				IN 4/		"	"	"	"					2.4 V	K1	10		3.16					"
"					dB_{CT} = -20 log (V_{OUT} / V_{IN})													50						dB
V_{ISO}	61	0.8 V	IN 4/				15.0 V	-15.0 V	+5.0 V	GND						K1	10		3.16					mV_{PP}
"	62	0.8 V		IN 4/			"	"	"	"						K1	11		3.16					"
"	63				IN 4/		"	"	"	"					0.8 V	K1	12		3.16					"
"	64					IN 4/	"	"	"	"					0.8 V	K1	13		3.16					"
"					dB_{ISO} = -20 log (V_{OUT} / V_{IN})													50						dB
t_{ON}	65	IN	IN				15.0 V	-15.0 V	+5.0 V	GND	OUT					K6	2 to 10				450			ns
"	66	IN		IN			"	"	"	"		OUT				K8	3 to 11				450			"
"	67				IN		"	"	"	"			OUT		IN	K9	4 to 12				450			"
"	68					IN	"	"	"	"				OUT	IN	K7	5 to 13				450			"
t_{OFF}	69	IN	IN				15.0 V	-15.0 V	+5.0 V	GND	OUT					K6	2 to 10				250			"
"	70	IN		IN			"	"	"	"		OUT				K8	3 to 11				250			"
"	71				IN		"	"	"	"			OUT		IN	K9	4 to 12				250			"
"	72					IN	"	"	"	"				OUT	IN	K7	5 to 13				250			"
t_{ON}	73	IN	IN				15.0 V	-15.0 V	+5.0 V	GND	OUT					K6	2 to 10						550	ns
"	74	IN		IN			"	"	"	"		OUT				K8	3 to 11						550	"
"	75				IN		"	"	"	"			OUT		IN	K9	4 to 12						550	"
"	76					IN	"	"	"	"				OUT	IN	K7	5 to 13						550	"
t_{OFF}	77	IN	IN				15.0 V	-15.0 V	+5.0 V	GND	OUT					K6	2 to 10						400	"
"	78	IN		IN			"	"	"	"		OUT				K8	3 to 11						400	"
"	79				IN		"	"	"	"			OUT		IN	K9	4 to 12						400	"
"	80					IN	"	"	"	"				OUT	IN	K7	5 to 13						400	"
																		Subgroup 11 T_A = -55°C		Subgroup 12 T_A = 25°C		Subgroup 13 T_A = 125°C		
																		Min	Max	Min	Max	Min	Max	
t_{ON}	81	IN	IN				15.0 V	-15.0 V	+5.0 V	GND	OUT					K6	2 to 10	---	375					ns
"	82	IN		IN			"	"	"	"		OUT				K8	3 to 11	---	375					"
"	83				IN		"	"	"	"			OUT		IN	K9	4 to 12	---	375					"
"	84					IN	"	"	"	"				OUT	IN	K7	5 to 13	---	375					"
t_{OFF}	85	IN	IN				15.0 V	-15.0 V	+5.0 V	GND	OUT					K6	2 to 10	---	250					"
"	86	IN		IN			"	"	"	"		OUT				K8	3 to 11	---	250					"
"	87				IN		"	"	"	"			OUT		IN	K9	4 to 12	---	250					"
"	88					IN	"	"	"	"				OUT	IN	K7	5 to 13	---	250					"
C_A	89	0.0 V					"	"	"	"						None	1			---	30			pF
"	90						"	"	"	"					0.0 V	"	14			---	30			"
C_{IS}	91						"	"	"	"						"	2			---	20			"
"	92						"	"	"	"						"	3			---	20			"
"	93						"	"	"	"						"	4			---	20			"
"	94						"	"	"	"						"	5			---	20			"
C_{OS}	95						"	"	"	"						"	10			---	20			"
"	96						"	"	"	"						"	11			---	20			"
"	97						"	"	"	"						"	12			---	20			"
"	98						"	"	"	"						"	13			---	20			"
t_D 5/	99	IN	IN	IN			"	"	"	"						K6, K14	10					20	---	ns
"	100	IN	IN	IN			"	"	"	"						K6, K14	11					20	---	"
"	101				IN	IN	"	"	"	"					IN	K7, K15	12					20	---	"
"	102				IN	IN	"	"	"	"					IN	K7, K15	13					20	---	"

See footnotes at end of table.

TABLE III. Group A inspection for device types 04, 06 – Continued.

Symbol	Test number	Adapter pin number 1/														Relays energized	Measured pin number	Test limits						Unit
		IN1	S_1	3	2	4	$+V_{CC}$	$-V_{CC}$	L	R	1	3	2	4	IN2			Subgroup 14 T_A = 125°C		Subgroup 14 T_A = -55°C				
		1	2	3	4	5	6	7	8	9	10	11	12	13	14			Min	Max	Min	Max			
t_{D5} 5/	103	IN	IN	IN			15.0 V	-15.0 V	+5.0 V	GND						K6, K14	10	20	---					ns
	104	IN	IN	IN	S		"	"	"	"	D	D	D			K6, K14	11	20	---					"
"	105		S	S	IN	IN	"	"	"	"					IN	K7, K15	12	20	---					"
"	106				IN	IN	"	"	"	"					IN	K7, K15	13	20	---					"
t_{D5} 5/	107	IN	IN	IN			"	"	"	"						K6, K14	10			20	---			"
	108	IN	IN	IN			"	"	"	"						K6, K14	11			20	---			"
"	109				IN	IN	"	"	"	"					IN	K7, K15	12			20	---			"
"	110				IN	IN	"	"	"	"					IN	K7, K15	13			20	---			"

See footnotes at end of table.

TABLE III. Group A inspection for device type 07, 08.

Symbol	Test number	Adapter pin number 1/															Relays energized	Measured pin number	Test limits						Unit
			IN	S_1	3	2	4	$+V_{CC}$	$-V_{CC}$	L	R	1	3	2	4	N.C.			Subgroup 1 T_A = 25°C		Subgroup 2 T_A = 125°C		Subgroup 3 T_A = -55°C		
		1 10/	1 11/	2	3	4	5	6	7	8	9	10	11	12	13	14			Min	Max	Min	Max	Min	Max	
R_{DS}	1	2.4 V	0.8 V	10.0 mA	S	S		15.0 V	-15.0 V	+5.0 V	GND	-10.0 V	D	D			None	2		-9.25		-8.50		-9.25	V 2/
"	2	"	2.4 V	S	10.0 mA			"	"	V	D	D	-10.0 V				"	3		-9.25		-8.50		-9.25	"
"	3	"	2.4 V			10.0 mA		"	"	"	"			-10.0 V			"	4		-9.25		-8.50		-9.25	"
"	4	"	0.8 V				10.0 mA	"	"	"	"				-10.0 V		"	5		-9.25		-8.50		-9.25	"
"	5	"	0.8 V	-10.0 mA						"	"	10.0 V					"	2	9.25		8.50		9.25		"
"	6	"	2.4 V		-10.0 mA			"	"	"	"		10.0 V				"	3	9.25		8.50		9.25		"
"	7	"	2.4 V			-10.0 mA		"	"	"	"			10.0 V			"	4	9.25		8.50		9.25		"
"	8	"	0.8 V				-10.0 mA	"	"	"	"				10.0 V		"	5	9.25		8.50		9.25		"
"	9	"	0.8 V	10.0 mA				10.0 V	-10.0 V	"	"	-7.5 V					"	2		-6.75		-6.0		-6.75	"
"	10	"	2.4 V		10.0 mA			"	"	"	"		-7.5 V				"	3		-6.75		-6.0		-6.75	"
"	11	"	2.4 V			10.0 mA		"	"	"	"			-7.5 V			"	4		-6.75		-6.0		-6.75	"
"	12	"	0.8 V				10.0 mA	"	"	"	"				-7.5 V		"	5		-6.75		-6.0		-6.75	"
"	13	"	0.8 V	-10.0 mA				"	"	"	"	7.5 V					"	2	6.75		6.0		6.75		"
"	14	"	2.4 V		-10.0 mA			"	"	"	"		7.5 V				"	3	6.75		6.0		6.75		"
"	15	"	2.4 V			-10.0 mA		"	"	"	"			7.5 V			"	4	6.75		6.0		6.75		"
"	16	"	0.8 V				-10.0 mA	"	"	"	"				7.5 V		"	5	6.75		6.0		6.75		"
$I_{D(ON)}$	17	"	0.8 V	10.0 V				15.0 V	-15.0 V	"	"	10.0 V					K10	2	-2	2	-200	200	-200	200	nA
"	18	"	2.4 V		10.0 V			"	"	"	"		10.0 V				K11	3	"	"	"	"	"	"	"
"	19	"	2.4 V			10.0 V		"	"	"	"			10.0 V			K12	4	"	"	"	"	"	"	"
"	20	"	0.8 V				10.0 V	"	"	"	"				10.0 V		K13	5	"	"	"	"	"	"	"
"	21	"	0.8 V	-10.0 V				"	"	"	"	-10.0 V					K10	2	"	"	"	"	"	"	"
"	22	"	2.4 V		-10.0 V			"	"	"	"		-10.0 V				K11	3	"	"	"	"	"	"	"
"	23	"	2.4 V			-10.0 V		"	"	"	"			-10.0 V			K12	4	"	"	"	"	"	"	"
"	24	"	0.8 V				-10.0 V	"	"	"	"				-10.0 V		K13	5	"	"	"	"	"	"	"
$I_{D(OFF)}$	25	0.8 V	2.4 V	-10.0 V				"	"	"	"	10.0 V					None	10	-1	1	-100	100	-100	100	nA
"	26	"	0.8 V		-10.0 V			"	"	"	"		10.0 V				"	11	"	"	"	"	"	"	"
"	27	"	0.8 V			-10.0 V		"	"	"	"			10.0 V			"	12	"	"	"	"	"	"	"
"	28	"	2.4 V				-10.0 V	"	"	"	"				10.0 V		"	13	"	"	"	"	"	"	"
"	29	"	2.4 V	10.0 V				"	"	"	"	-10.0 V					"	10	"	"	"	"	"	"	"
"	30	"	0.8 V		10.0 V			"	"	"	"		-10.0 V				"	11	"	"	"	"	"	"	"
"	31	"	0.8 V			10.0 V		"	"	"	"			-10.0 V			"	12	"	"	"	"	"	"	"
"	32	"	2.4 V				10.0 V	"	"	"	"				-10.0 V		"	13	"	"	"	"	"	"	"
$I_{S(OFF)}$	33	"	2.4 V	-10.0 V				"	"	"	"	10.0 V					None	2	-1	1	-100	100	-100	100	nA
"	34	"	0.8 V		-10.0 V			"	"	"	"		10.0 V				"	3	"	"	"	"	"	"	"
"	35	"	0.8 V			-10.0 V		"	"	"	"			10.0 V			"	4	"	"	"	"	"	"	"
"	36	"	2.4 V				-10.0 V	"	"	"	"				10.0 V		"	5	"	"	"	"	"	"	"
"	37	"	2.4 V	10.0 V				"	"	"	"	-10.0 V					"	2	"	"	"	"	"	"	"
"	38	"	0.8 V		10.0 V			"	"	"	"		-10.0 V				"	3	"	"	"	"	"	"	"
"	39	"	0.8 V			10.0 V		"	"	"	"			-10.0 V			"	4	"	"	"	"	"	"	"
"	40	"	2.4 V				10.0 V	"	"	"	"				-10.0 V		"	5	"	"	"	"	"	"	"
I_{IL}	41	0.0 V	0.0 V					"	"	"	"						"	1	-1	0	-10	0	-1	0	µA
I_{IH}	42	2.4 V	2.4 V					"	"	"	"						"	1	0	1	0	10	0	1	"
"	43	5.0 V	5.0 V					"	"	"	"						"	1	0	1	0	10	0	1	"
$+I_{CC}$	44	0.0 V	0.0 V					"	"	"	"						"	6	---	10	---	100	---	10	"
"	45	5.0 V	5.0 V					"	"	"	"						"	6	---	10	---	100	---	10	"
$-I_{CC}$	46	0.0 V	0.0 V					"	"	"	"						"	7	-10	---	-100	---	-10	---	"
"	47	5.0 V	5.0 V					"	"	"	"						"	7	-10	---	-100	---	-10	---	"
$+I_L$	48	0.0 V	0.0 V					"	"	"	"						"	8	---	10	---	100	---	10	"
"	49	5.0 V	5.0 V					"	"	"	"						"	8	---	10	---	100	---	10	"
$+I_R$	50	0.0 V	0.0 V					"	"	"	"						"	9	-10	---	-100	---	-10	---	"
"	51	5.0 V	5.0 V					"	"	"	"						"	9	-10	---	-100	---	-10	---	"

See footnotes at end of table.

TABLE III. Group A inspection for device types 07, 08 – Continued.

Symbol	Test number	Adapter pin number 1/ IN1	S_1	3	2	4	$+V_{CC}$	$-V_{CC}$	L	R	1	3	2	4	NC	Relays energized	Measured pin number	Test limits: Subgroup 4 T_A = 25°C Min	Max					Unit
		1	2	3	4	5	6	7	8	9	10	11	12	13	14									
V_{CTE}	52	IN 3/	S	S	S		15.0 V	-15.0 V	+5.0 V	GND	D	D	D			K2	10		15					mV
"	53	IN 3/					"	"	"	"						K4	11		"					"
"	54	IN 3/					"	"	"	"						K5	12		"					"
"	55	IN 3/					"	"	"	"						K3	13		"					"
																		Subgroup 7 T_A = 25°C Min	Max	Subgroup 9 T_A = 25°C Min	Max	Subgroup 10 T_A = 125°C Min	Max	
V_{CT}	56	2.4 V	IN 4/				15.0 V	-15.0 V	+5.0 V	GND						K1	12		3.16		3.16			mV_{PP}
					dB_{CT} = -20 log (V_{OUT} / V_{IN})													50						dB
"	57	2.4 V			IN 4/		15.0 V	-15.0 V	+5.0 V	GND						K1	10		3.16					mV_{PP}
V_{ISO}	58	0.8 V					15.0 V	-15.0 V	+5.0 V	GND						K1	10		3.16					mV_{PP}
"	59	0.8 V					"	"	"	"						K1	11		3.16					"
"	60	0.8 V					"	"	"	"						K1	12		3.16					"
"	61	0.8 V					"	"	"	"						K1	13		3.16					"
"					dB_{ISO} = -20 log (V_{OUT} / V_{IN})													50						dB
t_{ON}	62	IN	IN				15.0 V	-15.0 V	+5.0 V	GND	OUT					K6	2 to 10				450			ns
"	63	IN		IN			"	"	"	"		OUT				K8	3 to 11				450			"
"	64	IN			IN		"	"	"	"			OUT			K9	4 to 12				450			"
"	65	IN				IN	"	"	"	"				OUT		K7	5 to 13				450			"
t_{OFF}	66	IN	IN				15.0 V	-15.0 V	+5.0 V	GND	OUT					K6	2 to 10				250			"
"	67	IN		IN			"	"	"	"		OUT				K8	3 to 11				250			"
"	68	IN			IN		"	"	"	"			OUT			K9	4 to 12				250			"
"	69	IN				IN	"	"	"	"				OUT		K7	5 to 13				250			"
t_{ON}	70	IN	IN				15.0 V	-15.0 V	+5.0 V	GND	OUT					K6	2 to 10						550	ns
"	71	IN		IN			"	"	"	"		OUT				K8	3 to 11						550	"
"	72	IN			IN		"	"	"	"			OUT			K9	4 to 12						550	"
"	73	IN				IN	"	"	"	"				OUT		K7	5 to 13						550	"
t_{OFF}	74	IN	IN				15.0 V	-15.0 V	+5.0 V	GND	OUT					K6	2 to 10						400	"
"	75	IN		IN			"	"	"	"		OUT				K8	3 to 11						400	"
"	76	IN			IN		"	"	"	"			OUT			K9	4 to 12						400	"
"	77	IN				IN	"	"	"	"				OUT		K7	5 to 13						400	"
																		Subgroup 11 T_A = -55°C Min	Max	Subgroup 12 T_A = 25°C Min	Max	Subgroup 13 T_A = 25°C Min	Max	
t_{ON}	78	IN	IN				15.0 V	-15.0 V	+5.0 V	GND	OUT					K6	2 to 10	---	375					ns
"	79	IN		IN			"	"	"	"		OUT				K8	3 to 11	---	375					"
"	80	IN			IN		"	"	"	"			OUT			K9	4 to 12	---	375					"
"	81	IN				IN	"	"	"	"				OUT		K7	5 to 13	---	375					"
t_{OFF}	82	IN	IN				15.0 V	-15.0 V	+5.0 V	GND	OUT					K6	2 to 10	---	250					"
"	83	IN		IN			"	"	"	"		OUT				K8	3 to 11	---	250					"
"	84	IN			IN		"	"	"	"			OUT			K9	4 to 12	---	250					"
"	85	IN				IN	"	"	"	"				OUT		K7	5 to 13	---	250					"
C_A	86	0.0 V					"	"	"	"						None	1			---	30			pF
C_{IS}	87						"	"	"	"						"	2			---	20			"
"	88						"	"	"	"						"	3			---	20			"
"	89						"	"	"	"						"	4			---	20			"
"	90						"	"	"	"						"	5			---	20			"
C_{OS}	91						"	"	"	"						"	10			---	20			"
"	92						"	"	"	"						"	11			---	20			"
"	93						"	"	"	"						"	12			---	20			"
"	94						"	"	"	"						"	13			---	20			"
t_D 5/	95	IN	IN	IN			"	"	"	"						K6, K14	10					20	---	ns
"	96	IN	IN	IN			"	"	"	"						K6, K14	11					20	---	"
"	97	IN			IN	IN	"	"	"	"						K7, K15	12					20	---	"
"	98	IN			IN	IN	"	"	"	"						K7, K15	13					20	---	"

See footnotes at end of table.

TABLE III. Group A inspection for device types 07, 08 – Continued.

Symbol	Test number	Adapter pin number 1/														Relays energized	Measured pin number	Test limits						Unit
		IN1	S_1	3	2	4	$+V_{CC}$	$-V_{CC}$	L	R	1	3	2	4	IN2			Subgroup 14 T_A = 125°C		Subgroup 14 T_A = -55°C				
		1	2	3	4	5	6	7	8	9	10	11	12	13	14			Min	Max	Min	Max			
t_{D5} 5/	99	IN	IN	IN			15.0 V	-15.0 V	+5.0 V	GND						K6, K14	10	20	---					ns
"	100	IN	IN S	IN S	S		"	"	" V	" D	D	D	D			K6, K14	11	20	---					"
"	101	IN			IN	IN	"	"	"	"						K7, K15	12	20	---					"
"	102	IN			IN	IN	"	"	"	"						K7, K15	13	20	---					"
t_{D5} 5/	103	IN	IN	IN			"	"	"	"						K6, K14	10			20	---			"
"	104	IN	IN	IN			"	"	"	"						K6, K14	11			20	---			"
"	105	IN			IN	IN	"	"	"	"						K7, K15	12			20	---			"
"	106	IN			IN	IN	"	"	"	"						K7, K15	13			20	---			"

1/ The test circuits used with table III are shown in figure 13, 14, 15, 16, and 17. The waveforms of figure 8 apply to all device types as specified in table III (see tests for t_{ON} and t_{OFF}). The waveforms of figure 12 apply to devices 03, 04, and 07 only as specified in table III.

2/ R_{DS} may be measured differentially with respect to V_A. In case of differentially measured voltages, the table III limits representing voltage drop across the tested switch must be maintained.

3/ The input pulse generator shall have the following characteristics: V_{GEN} = 0-3 V for all device types: rise time / fall time $\leq$ 10 ns; PRR = 1 kHz at 50 percent duty cycle.

4/ The input generator shall have the following characteristics: V_{GEN} = 1 V_{PP} at 1 MHz.

5/ Break-before-make test applies to devices 03, 04, and 07 only.

6/ Conditions for device type 03 only.

7/ Conditions for device type 05 only.

8/ Conditions for device type 06 only.

9/ Conditions for device type 04 only.

10/ Conditions for device type 08 only.

11/ Conditions for device type 07 only.

Table IV. Groups C end point electrical parameters. (T_A = 25°C, $\pm V_{CC}$ = ±15 V).

Test	Device types 01 - 08		
	Limits		Delta
	Min	Max	
R_{DS}	+9.25 V	-9.25 V	50 mV
R_{DS}	-10.00 V	+10.00 V	50 mV
$I_{S(OFF)}$	-1 nA	+1 nA	±0.5 nA
$I_{D(OFF)}$	-1 nA	+1 nA	±0.5 nA

5. PACKAGING

5.1 Packaging requirements. For acquisition purposes, the packaging requirements shall be as specified in the contract or order (see 6.2). When packaging of materiel is to be performed by DoD personnel, these personnel need to contact the responsible packaging activity to ascertain requisite packaging requirements. Packaging requirements are maintained by the Inventory Control Point's packaging activity within the Military Department of Defense Agency, or within the Military Department's System Command. Packaging data retrieval is available from the managing Military Department's or Defense Agency's automated packaging files, CD-ROM products, or by contacting the responsible packaging activity.

6. NOTES

(This section contains information of a general or explanatory nature which may be helpful, but is not mandatory.)

6.1 Intended use. Microcircuits conforming to this specification are intended for logistic support of existing equipment.

6.2 Acquisition requirements. Acquisition documents should specify the following:

a. Title, number, and date of the specification.

b. PIN and compliance identifier, if applicable (1.2).

c. Requirements for delivery of one copy of the conformance inspection data pertinent to the device inspection lot to be supplied with each shipment by the device manufacturer, if applicable.

d. Requirements for certificate of compliance, if applicable.

e. Requirements for notification of change of product or process to acquiring activity in addition to notification of the qualifying activity, if applicable.

f. Requirements for failure analysis (including required test condition of MIL-STD-883, method 5003), corrective action and reporting of results, if applicable.

g. Requirements for product assurance options.

h. Requirements for special carriers, lead lengths, or lead forming, if applicable. These requirements should not affect the part number. Unless otherwise specified, these requirements will not apply to direct purchase by or direct shipment to the Government.

i. Requirements for "JAN" marking.

j. Packaging requirements (see 5.1).

6.3 Qualification. With respect to products requiring qualification, awards will be made only for products which are, at the time of award of contract, qualified for inclusion in Qualified Manufacturers List QML-38535 whether or not such products have actually been so listed by that date. The attention of the contractors is called to these requirements, and manufacturers are urged to arrange to have the products that they propose to offer to the Federal Government tested for qualification in order that they may be eligible to be awarded contracts or purchase orders for the products covered by this specification. Information pertaining to qualification of products may be obtained from DSCC-VQ, 3990 E. Broad Street, Columbus, Ohio 43123-1199.

6.4 Superseding information. The requirements of MIL-M-38510 have been superseded to take advantage of the available Qualified Manufacturer Listing (QML) system provided by MIL-PRF-38535. Previous references to MIL-M-38510 in this document have been replaced by appropriate references to MIL-PRF-38535. All technical requirements now consist of this specification and MIL-PRF-38535. The MIL-M-38510 specification sheet number and PIN have been retained to avoid adversely impacting existing government logistics systems and contractor's parts lists.

6.5 Abbreviations, symbols, and definitions. The abbreviations, symbols, and definitions used herein are defined in MIL-PRF-38535, MIL-HDBK-1331, and as follows:.

$+V_{CC}$ ..... Positive supply voltage.
$-V_{CC}$ ..... Negative supply voltage.
$+I_{CC}$ ..... Positive supply current.
$-I_{CC}$ ..... Negative supply current.
V_L ..... Logic supply voltage.
I_L ..... Logic supply current.
R_{DS} ..... Resistance of an “ON” switch.
V_D ..... Drain voltage.
V_S ..... Source voltage.
$I_{D(ON)}$ ..... Leakage current from an “ON” driver into the switch.
$I_{D(OFF)}$ ..... Leakage current into the drain terminal of an “OFF” switch.
$I_{S(OFF)}$ ..... Leakage current into the source terminal of an “OFF” switch.
t_{ON} ..... Switching time as defined in figure 8.
t_{OFF} ..... Switching time as defined in figure 8.
V_{CTE} ..... Charge transfer error.
V_{CT} ..... Crosstalk between switches.
V_{ISO} ..... Isolation from source to drain of a closed switch.

6.6 Logistic support. Lead materials and finishes (see 3.4) are interchangeable. Unless otherwise specified, microcircuits acquired for Government logistic support will be acquired to device class B (see 1.2.2), lead material and finish A (see 3.4). Longer length leads and lead forming should not affect the part number.

6.7 Substitutability. The cross-reference information below is presented for the convenience of users. Microcircuits covered by this specification will functionally replace the listed generic-industry type. Generic-industry microcircuit types may not have equivalent operational performance characteristics across military temperature ranges or reliability factors equivalent to MIL-M-38510 device types and may have slight physical variations in relation to case size. The presence of this information should not be deemed as permitting substitution of generic-industry types for MIL-M-38510 types or as a waiver of any of the provisions of MIL-PRF-38535.

Military device type	Generic-industry type
01	5040
02	5041
03	5042
04	5043
05	5044
06	5045
07	5046
08	5047

6.8 Changes from previous issue. Marginal notations is revision to identify changes with respect to the previous issue, due to the extensiveness of the changes.

Custodians:
Army – CR
Navy - EC
Air Force - 11
NASA – NA
DLA – CC

Preparing activity:
DLA - CC

Project 5962-2005-056

Review activities:
Army – MI, SM
Navy – AS, CG, MC, SH, TD
Air Force – 03, 19, 99

NOTE: The activities listed above were interested in this document as of the date of this document. Since organizations and responsibilities can change, you should verify the currency of the information above using the ASSIST Online database at http://assist.daps.dla.mil.