INCH-POUND

MIL-M-38510/10D
16 February 2005
SUPERSEDING
MIL-M-38510/10C
3 March 1986

MILITARY SPECIFICATION

MICROCIRCUITS, DIGITAL, BIPOLAR, TTL, DECODERS MONOLITHIC SILICON

Inactive for new design after 7 September 1995.

This specification is approved for use by all Departments and Agencies of the Department of Defense.

The requirements for acquiring the product herein shall consist of this specification sheet and MIL-PRF 38535

1. SCOPE

1.1 Scope. This specification covers the detail requirements for monolithic silicon, TTL, microcircuit decoders. Two product assurance classes and a choice of case outlines and lead finishes are provided for each type and are reflected in the complete part number. For this product, the requirements of MIL-M-38510 have been superseded by MIL-PRF-38535, (see 6.4).

1.2 Part or Identifying Number (PIN). The PIN is in accordance with MIL-PRF-38535.

1.2.1 Device types. The device types are as follows:

Device type	Circuit
01	BCD-to-decimal decoder
02	Excess-3-to-decimal decoder
03	Excess-3-gray-to-decimal decoder
04	BCD-to-decimal decoder/driver (30 volt, open collector output)
05	BCD-to-decimal decoder/driver (15 volt, open collector output)
06	BCD-to-seven segment decoder/driver (30 volt, open collector output)
07	BCD-to-seven segment decoder/driver (15 volt, open collector output)
08	BCD-to-seven segment decoder/driver
09	BCD-to-seven segment decoder/driver (5.5 volt, open collector output)

1.2.2 Device class. The device class is the product assurance level as defined in MIL-PRF-38535.

1.2.3 Case outlines. The case outlines are as designated in MIL-STD-1835 and as follows:

Outline letter	Descriptive designator	Terminals	Package style
A	GDFP5-F14 or CDFP6-F14	14	Flat pack
B	GDFP4-F14	14	Flat pack
C	GDIP1-T14 or CDIP2-T14	14	Dual-in-line
D	GDFP1-F14 or CDFP2-F14	14	Flat pack
E	GDIP1-T16 or CDIP2-T16	16	Dual-in-line
F	GDFP2-F16 or CDFP3-F16	16	Flat pack

Comments, suggestions, or questions on this document should be addressed to: Commander, Defense Supply Center Columbus, ATTN: DSCC-VAS, P. O. Box 3990, Columbus, OH 43218-3990, or emailed to bipolar@dscc.dla.mil. Since contact information can change, you may want to verify the currency of this address information using the ASSIST Online database at http://assist.daps.dla.mil.

1.3 Absolute maximum ratings.

Supply voltage range ..... -0.5 V dc to +7.0 V dc
Input voltage range ..... -1.5 V dc at -12 mA to +5.5 V dc
Storage temperature range ..... -65° to +150°C
Maximum power dissipation (P_D): 1/
Device types 01, 02 and 03 ..... 226 mW
Device types 04 and 05 ..... 341 mW
Device types 06, 07, 08 and 09 ..... 467 mW
Lead temperature (soldering, 10 seconds) ..... +300°C
Thermal resistance, junction to case (θ_{JC}):
Cases A, B, C, D, E and F ..... (See MIL-STD-1835)
Junction temperature (T_J) 2/ ..... 175°C
Maximum current into any output (output off):
Device types 04, 05, 06, 07 and 09 ..... 1 mA

1.4 Recommended operating conditions.

Supply voltage (V_{CC}) ..... 4.5 V dc minimum to 5.5 V dc maximum
Minimum high level input voltage (V_{IH}) ..... 2.0 V dc
Maximum low level input voltage (V_{IL}) ..... 0.8 V dc
Sink current capability by device type:
Device types 01, 02, 03 ..... 16 mA
Device types 04, 05 ..... 20 mA
Device types 06, 07
Outputs A - G ..... 40 mA
BI/RBO node ..... 8 mA
Device type 08
Outputs A - G ..... 6.4 mA
BI/RBO node ..... 8 mA
Device type 09 ..... 10 mA
Case operating temperature range (T_C) ..... -55° to +125°C

2. APPLICABLE DOCUMENTS

2.1 General. The documents listed in this section are specified in sections 3, 4, or 5 of this specification. This section does not include documents cited in other sections of this specification or recommended for additional information or as examples. While every effort has been made to ensure the completeness of this list, document users are cautioned that they must meet all specified requirements of documents cited in sections 3, 4, or 5 of this specification, whether or not they are listed.

1/ Must withstand the added P_D due to short-circuit test (e.g., I_{OS}).
2/ Maximum junction temperature should not be exceeded except in accordance with allowable short duration burn-in screening condition in accordance with MIL-PRF-38535.

2.2 Government documents.

2.2.1 Specifications and standards. The following specifications and standards form a part of this specification to the extent specified herein. Unless otherwise specified, the issues of these documents are those cited in the solicitation or contract.

DEPARTMENT OF DEFENSE SPECIFICATIONS

MIL-PRF-38535 - Integrated Circuits (Microcircuits) Manufacturing, General Specification for.

DEPARTMENT OF DEFENSE STANDARDS

MIL-STD-883 - Test Method Standard for Microelectronics.
MIL-STD-1835 - Interface Standard Electronic Component Case Outlines

(Copies of these documents are available online at http://assist.daps.dla.mil/quicksearch/ or http://assist.daps.dla.mil or from the Standardization Document Order Desk, 700 Robbins Avenue, Building 4D, Philadelphia, PA 19111-5094.)

2.3 Order of precedence. In the event of a conflict between the text of this specification and the references cited herein, the text of this document takes precedence. Nothing in this document, however, supersedes applicable laws and regulations unless a specific exemption has been obtained.

3. REQUIREMENTS

3.1 Qualification. Microcircuits furnished under this specification shall be products that are manufactured by a manufacturer authorized by the qualifying activity for listing on the applicable qualified manufacturers list before contract award (see 4.3 and 6.3).

3.2 Item requirements. The individual item requirements shall be in accordance with MIL-PRF-38535 and as specified herein or as modified in the device manufacturer's Quality Management (QM) plan. The modification in the QM plan shall not affect the form, fit, or function as described herein. This slash sheet has been modified to allow the manufacturer to use the alternate die/fabrication requirements of paragraph A.3.2.2 of MIL-PRF-38535 or other alternative approved by the qualifying activity.

3.3 Design, construction, and physical dimensions. The design, construction, and physical dimensions shall be as specified in MIL-PRF-38535 and herein.

3.3.1 Case outlines. The case outlines shall be as specified in 1.2.3.

3.3.2 Logic diagrams and terminal connections. The logic diagrams and terminal connections shall be as specified on figures 1 and 2.

3.3.3 Truth tables. The truth tables shall be as specified on figure 3.

3.3.4 Schematic circuits. The schematic circuits shall be maintained by the manufacturer and made available to the qualifying activity and the preparing activity upon request.

3.4 Lead material and finish. The lead material and finish shall be in accordance with MIL-PRF-38535 (see 6.6).

3.5 Electrical performance characteristics. The electrical performance characteristics are as specified in table I, and apply over the full recommended case operating temperature range, unless otherwise specified.

3.6 Electrical test requirements. The electrical test requirements for each device class shall be the subgroups specified in table II. The electrical tests for each subgroup are described in table III.

TABLE I. Electrical performance characteristics, device types 01, 02 and 03.

Test	Symbol	Conditions $-55°C \le T_C \le +125°C$ unless otherwise specified	Limits		Unit
			Min	Max	
High level output voltage	V_{OH}	V_{CC} = 4.5 V, I_{OH} = -0.8 mA	2.4		V
Low level output voltage	V_{OL}	V_{CC} = 4.5 V, I_{OL} = 16 mA, V_{IN} = 0.8 V and 2.0 V		0.4	V
Input clamp voltage	V_{IC}	V_{CC} = 4.5 V, I_{IN} = -12 mA		-1.5	V
Low level input current	I_{IL}	V_{CC} = 5.5 V, V_{IN} = 0.4 V 1/	-0.7	-1.6	mA
High level input current	I_{IH1}	V_{CC} = 5.5 V, V_{IN} = 2.4 V 2/		40	µA
	I_{IH2}	V_{CC} = 5.5 V, V_{IN} = 5.5 V 2/		100	µA
Short circuit output current	I_{OS}	V_{CC} = 5.5 V 3/	-20	-55	mA
Supply current	I_{CC}	V_{CC} = 5.5 V, V_{IN} = 0 V		41	mA
Propagation delay time through two logic levels	t_{PHL}	C_L = 50 pF minimum, R_L = 390 Ω ±5% (Figure 4)	5	39	ns
Propagation delay time through two logic levels	t_{PLH}		5	39	ns
Propagation delay time through three logic levels	t_{PHL}		5	46	ns
Propagation delay time through three logic levels	t_{PLH}		5	46	ns

1/ All unspecified inputs at 5.5 volts.
2/ All unspecified inputs grounded.
3/ Not more than one output should be shorted at one time.

TABLE I. Electrical performance characteristics, device types 04 and 05.

Test	Symbol	Conditions $-55°C \leq T_C \leq +125°C$ unless otherwise specified	Limits		Unit
			Min	Max	
Low level output voltage	V_{OL1}	V_{CC} = 4.5 V, I_{OL} = 80 mA		0.9	V
Low level output voltage	V_{OL2}	V_{CC} = 4.5 V, I_{OL} = 20 mA		0.4	V
Input clamp voltage	V_{IC}	V_{CC} = 4.5 V, I_{IN} = -12 mA		-1.5	V
Maximum collector cut-off current	I_{CEX}	V_{CC} = 4.5 V, V_{OH} = max 1/		250	μA
Low level input current	I_{IL}	V_{CC} = 5.5 V, V_{IN} = 0.4 V 2/	-0.7	-1.6	mA
High level input current	I_{IH1}	V_{CC} = 5.5 V, V_{IN} = 2.4 V 3/		40	μA
	I_{IH2}	V_{CC} = 5.5 V, V_{IN} = 5.5 V 3/		100	μA
Supply current	I_{CC}	V_{CC} = 5.5 V, V_{IN} = 0 V		62	mA
Propagation delay time to a high logic level	t_{PLH}	C_L = 50 pF minimum, R_L = 390 Ω ±5% (Figure 5)	5	73	ns
Propagation delay time to a low logic level	t_{PHL}		5	73	ns

1/ Device type 04 maximum V_{OH} = 30 V.
Device type 05 maximum V_{OH} = 15 V.
2/ All unspecified inputs at 5.5 volts.
3/ All unspecified inputs grounded.

TABLE I. Electrical performance characteristics, device types 06 and 07.

Test	Symbol	Conditions $-55°C \le T_C \le +125°C$ unless otherwise specified	Limits		Unit
			Min	Max	
Low level output voltage 1/	V_{OL1}	V_{CC} = 4.5 V, I_{OL} = 40 mA		0.4	V
Low level output voltage 2/	V_{OL2}	V_{CC} = 4.5 V, I_{OL} = 8 mA		0.4	V
Input clamp voltage	V_{IC}	V_{CC} = 4.5 V, I_{IN} = -12 mA		-1.5	V
High level output voltage 2/	V_{OH}	V_{CC} = 4.5 V, I_{OH} = -0.2 mA	2.4		V
Maximum collector cut-off current 3/	I_{CEX}	V_{CC} = 4.5 V, V_{OH} = max 3/		250	µA
Low level input current 4/	I_{IL1}	V_{CC} = 5.5 V, V_{IN} = 0.4 V 5/	-0.4	-1.6	mA
Low level input current 2/	I_{IL2}	V_{CC} = 5.5 V, V_{IN} = 0.4 V 5/	-1.7	-4.2	mA
High level input current 4/	I_{IH1}	V_{CC} = 5.5 V, V_{IN} = 2.4 V 6/		40	µA
	I_{IH2}	V_{CC} = 5.5 V, V_{IN} = 5.5 V 6/		100	µA
Short circuit output current 1/	I_{OS}	V_{CC} = 5.5 V 6/		-4	mA
Supply current	I_{CC}	V_{CC} = 5.5 V, V_{IN} = 5.5 V		85	mA
Propagation delay time from any input except RBI to any output	t_{PLH}	C_L = 50 pF minimum, R_L = 120 Ω ±5% 1/	8	144	ns
Propagation delay time from RBI to any output	t_{PLH}	R_L = 560 Ω ±5% 2/ (Figure 6)	8	144	ns
Propagation delay time from any input except RBI to any output	t_{PHL}		8	144	ns
Propagation delay time from RBI to any output	t_{PHL}		8	144	ns

1/ Outputs A through G only.
2/ BI/RBO node only.
3/ Device type 06 maximum V_{OH} = 30 V.
Device type 07 maximum V_{OH} = 15 V.
4/ Any input except BI/RBO node.
5/ All unspecified inputs at 5.5 volts.
6/ All unspecified inputs grounded.

TABLE I. Electrical performance characteristics, device types 08.

Test	Symbol	Conditions $-55°C \le T_C \le +125°C$ unless otherwise specified	Limits		Unit
			Min	Max	
High level output voltage 1/	V_{OH1}	V_{CC} = 4.5 V, I_{OH} = -0.4 mA	2.4		V
High level output voltage 2/	V_{OH2}	V_{CC} = 4.5 V, I_{OH} = -0.2 mA	2.4		V
Low level output voltage 1/	V_{OL1}	V_{CC} = 4.5 V, I_{OL} = 6.4 mA		0.4	V
Low level output voltage 2/	V_{OL2}	V_{CC} = 4.5 V, I_{OL} = 8 mA		0.4	V
Input clamp voltage	V_{IC}	V_{CC} = 4.5 V, I_{IN} = -12 mA		-1.5	V
Low level input current 3/	I_{IL1}	V_{CC} = 5.5 V, V_{IN} = 0.4 V 4/	-0.4	-1.6	mA
Low level input current 3/	I_{IL2}	V_{CC} = 5.5 V, V_{IN} = 0.4 V 4/	-1.7	-4.2	mA
High level input current 3/	I_{IH1}	V_{CC} = 5.5 V, V_{IN} = 2.4 V 5/		40	µA
	I_{IH2}	V_{CC} = 5.5 V, V_{IN} = 5.5 V 5/		100	µA
Short circuit output current	I_{OS}	V_{CC} = 5.5 V		-4	mA
Supply current	I_{CC}	V_{CC} = 5.5 V, V_{IN} = 0 V		76	mA
Propagation delay time from any input except RBI to any output	t_{PLH}	C_L = 50 pF minimum, R_L = 750 Ω ±5% 1/ R_L = 560 Ω ±5% 2/ (Figure 7)	8	144	ns
Propagation delay time from RBI to any output	t_{PLH}		8	144	ns
Propagation delay time from any input except RBI to any output	t_{PHL}		8	144	ns
Propagation delay time from RBI to any output	t_{PHL}		8	144	ns

1/ Outputs A through G only.
2/ BI/RBO node only.
3/ Any input except BI/RBO node.
4/ All unspecified inputs at 5.5 volts.
5/ All unspecified inputs grounded.

TABLE I. Electrical performance characteristics, device types 09.

Test	Symbol	Conditions $-55°C \leq T_C \leq +125°C$ unless otherwise specified	Limits		Unit
			Min	Max	
Low level output voltage	V_{OL}	V_{CC} = 4.5 V, I_{OL} = 10 mA		0.4	V
Input clamp voltage	V_{IC}	V_{CC} = 4.5 V, I_{IN} = -12 mA		-1.5	V
Maximum collector cut-off current	I_{CEX}	V_{CC} = 4.5 V, V_{OH} = 5.5 V		250	μA
Low level input current	I_{IL}	V_{CC} = 5.5 V, V_{IN} = 0.4 V 1/	-0.4	-1.6	mA
High level input current	I_{IH1}	V_{CC} = 5.5 V, V_{IN} = 2.4 V 2/		40	μA
	I_{IH2}	V_{CC} = 5.5 V, V_{IN} = 5.5 V 2/		100	μA
Supply current	I_{CC}	V_{CC} = 5.5 V, V_{IN} = 0 V		47	mA
Propagation delay time from any input to any output	t_{PLH}	C_L = 50 pF minimum, R_L = 470 Ω ±5% (Figure 8)	8	144	ns
Propagation delay time from any input to any output	t_{PHL}		8	144	ns

1/ All unspecified inputs at 5.5 volts.
2/ All unspecified inputs grounded.

TABLE II. Electrical test requirements.

MIL-PRF-38535 test requirements	Subgroups (see table III)	
	Class S devices	Class B devices
Interim electrical parameters	1	1
Final electrical test parameters	1*, 2, 3, 7 9, 10, 11	1*, 2, 3, 7, 9
Group A test requirements	1, 2, 3, 7, 8 9, 10, 11	1, 2, 3, 7, 8, 9, 10, 11
Group B electrical test parameters when using the method 5005 QCI option	1, 2, 3, 9, 10, 11	N/A
Group C end-point electrical parameters	1, 2, 3, 9, 10, 11	1, 2, 3
Group D end-point electrical parameters	1, 2, 3	1, 2, 3

*PDA applies to subgroup 1.

3.7 Marking. Marking shall be in accordance with MIL-PRF-38535.

3.7.1 Certification/compliance mark. The certification mark for device classes Q and V shall be a "QML" or "Q" as required in MIL-PRF-38535. For class Q product built in accordance with A.3.2.2 of MIL-PRF-38535 or other alternative approved by the qualifying activity, the "QD" certification mark shall be used in place of the "QML" or "Q" certification mark.

3.8 Microcircuit group assignment. The devices covered by this specification shall be in microcircuit group number 4 (see MIL-PRF-38535, appendix A).

4. VERIFICATION

4.1 Sampling and inspection. Sampling and inspection procedures shall be in accordance with MIL-PRF-38535 or as modified in the device manufacturer's Quality Management (QM) plan. The modification in the QM plan shall not effect the form, fit, or function as described herein.

4.2 Screening. Screening shall be in accordance with MIL-PRF-38535 and shall be conducted on all devices prior to qualification and conformance inspection. The following additional criteria shall apply:

a. The burn-in test duration, test condition, and test temperature, or approved alternatives shall be as specified in the device manufacturer's QM plan in accordance with MIL-PRF-38535. The burn-in test circuit shall be maintained under document control by the device manufacturer's Technology Review Board (TRB) in accordance with MIL-PRF-38535 and shall be made available to the acquiring or preparing activity upon request. The test circuit shall specify the inputs, outputs, biases, and power dissipation, as applicable, in accordance with the intent specified in test method 1015 of MIL-STD-883.

b. Interim and final electrical test parameters shall be as specified in table II, except interim electrical parameters test prior to burn-in is optional at the discretion of the manufacturer.

c. Additional screening for space level product shall be as specified in MIL-PRF-38535.

4.3 Qualification inspection. Qualification inspection shall be in accordance with MIL-PRF-38535.

4.4 Technology Conformance Inspection (TCI). Technology conformance inspection shall be in accordance with MIL-PRF-38535 and herein for groups A, B, C, and D inspections (see 4.4.1 through 4.4.4).

4.4.1 Group A inspection. Group A inspection shall be in accordance with table III of MIL-PRF-38535 and as follows:

a. Tests shall be as specified in table II herein.

b. Subgroups 4, 5, and 6 shall be omitted.

4.4.2 Group B inspection. Group B inspection shall be in accordance with table II of MIL-PRF-38535.

4.4.3 Group C inspection. Group C inspection shall be in accordance with table IV of MIL-PRF-38535 and as follows:

a. End-point electrical parameters shall be as specified in table II herein.

b. The steady-state life test duration, test condition, and test temperature, or approved alternatives shall be as specified in the device manufacturer's QM plan in accordance with MIL-PRF-38535. The burn-in test circuit shall be maintained under document control by the device manufacturer's Technology Review Board (TRB) in accordance with MIL-PRF-38535 and shall be made available to the acquiring or preparing activity upon request. The test circuit shall specify the inputs, outputs, biases, and power dissipation, as applicable, in accordance with the intent specified in test method 1005 of MIL-STD-883.

4.4.4 Group D inspection. Group D inspection shall be in accordance with table V of MIL-PRF-38535. End-point electrical parameters shall be as specified in table II herein.

4.5 Methods of inspection. Methods of inspection shall be specified as follows:

4.5.1 Voltage and current. All voltages given are referenced to the microcircuit ground terminal. Currents given are conventional and positive when flowing into the referenced terminal.

Terminal number	Device type 01, 02, 03, 04, and 05	Device type 06 and 07	Device type 08	Device type 09
	Cases E and F	Cases E and F	Cases E and F	Cases A, B, C, and D
1	OUT 0	IN B	IN B	IN B
2	OUT 1	IN C	IN C	IN C
3	OUT 2	LT	LT	BI
4	OUT 3	RBO	RBO/B1	IN D
5	OUT 4	RBI	RBI	IN A
6	OUT 5	IN D	IN D	OUT E
7	OUT 6	IN A	IN A	GND
8	GND	GND	GND	OUT D
9	OUT 7	OUT E	OUT E	OUT C
10	OUT 8	OUT D	OUT D	OUT B
11	OUT 9	OUT C	OUT C	OUT A
12	IN D	OUT B	OUT B	OUT G
13	IN C	OUT A	OUT A	OUT F
14	IN B	OUT G	OUT G	V_{CC}
15	IN A	OUT F	OUT F	
16	V_{CC}	V_{CC}	V_{CC}	

LT = Lamp Test
BI = Blanking Input
RBO = Ripple-blanking Output
RBI = Ripple-blanking Input

FIGURE 1. Terminal connections.

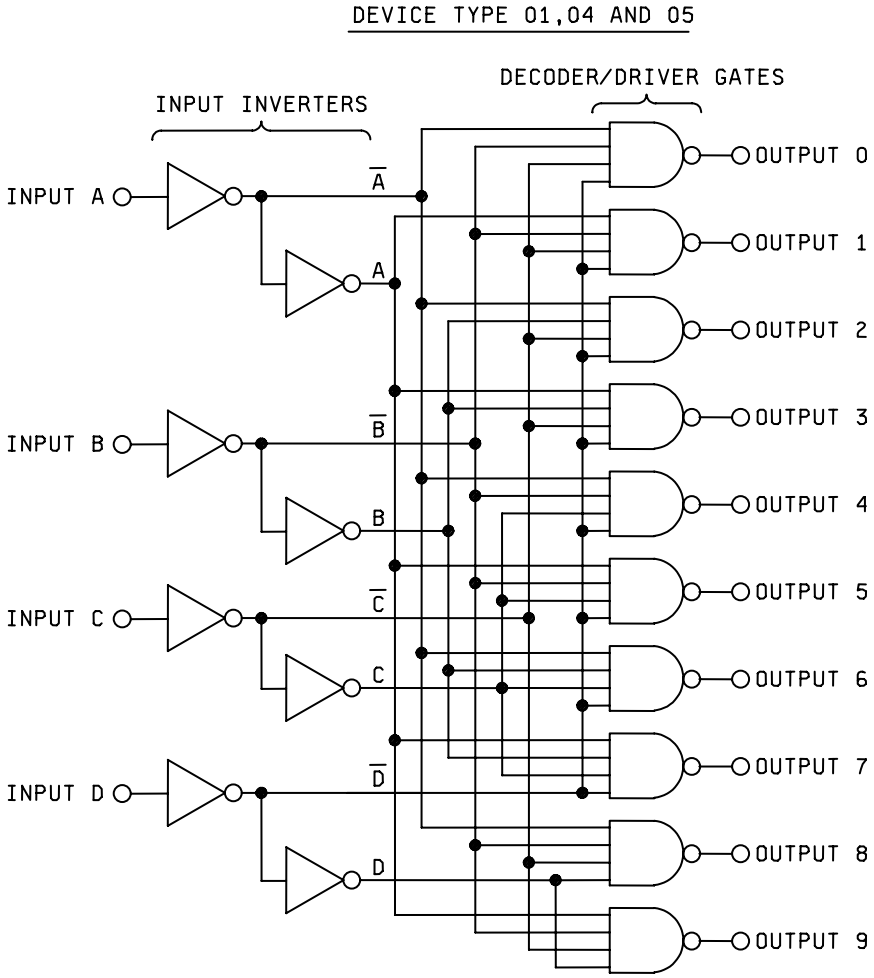

FIGURE 2. Logic diagrams.

DEVICE TYPE 02

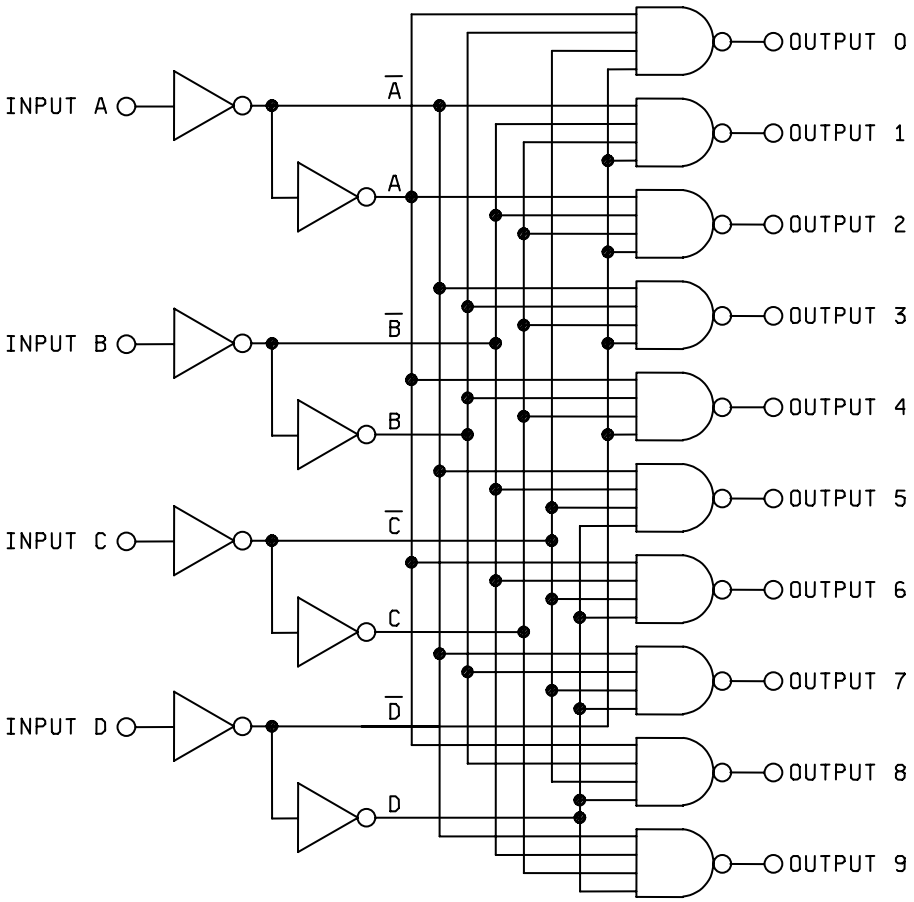

FIGURE 2. Logic diagrams - Continued.

DEVICE TYPE 03

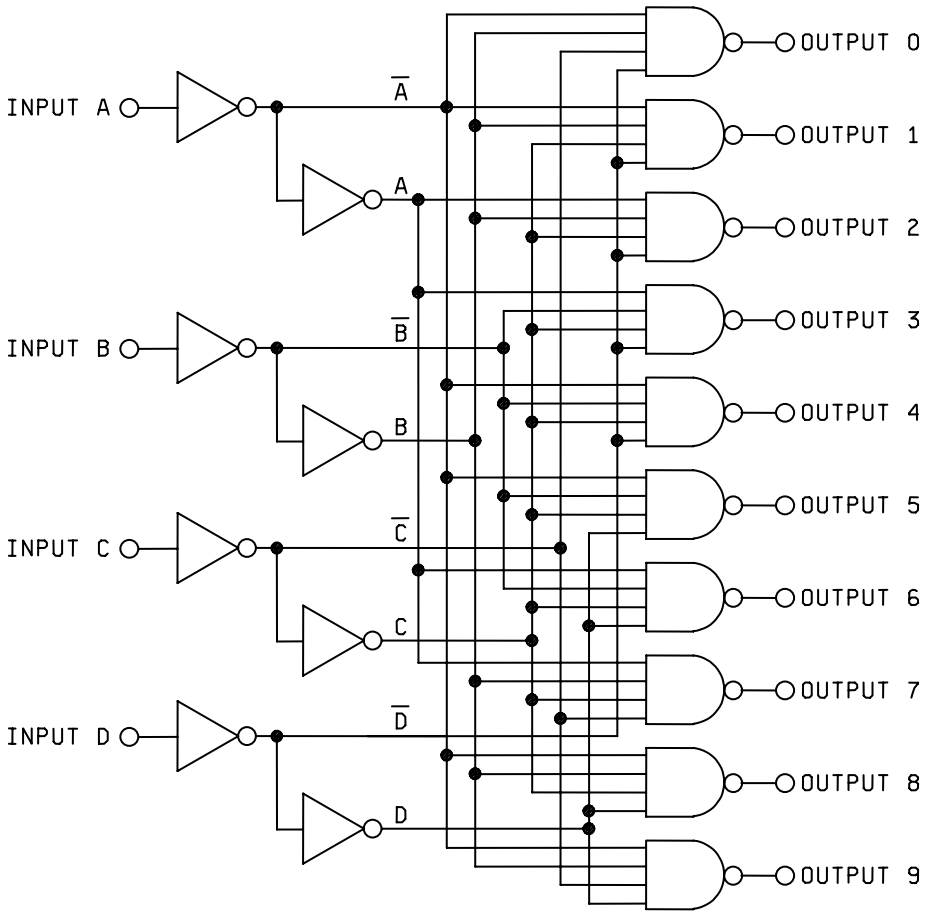

FIGURE 2. Logic diagrams - Continued.

DEVICE TYPES 06 AND 07

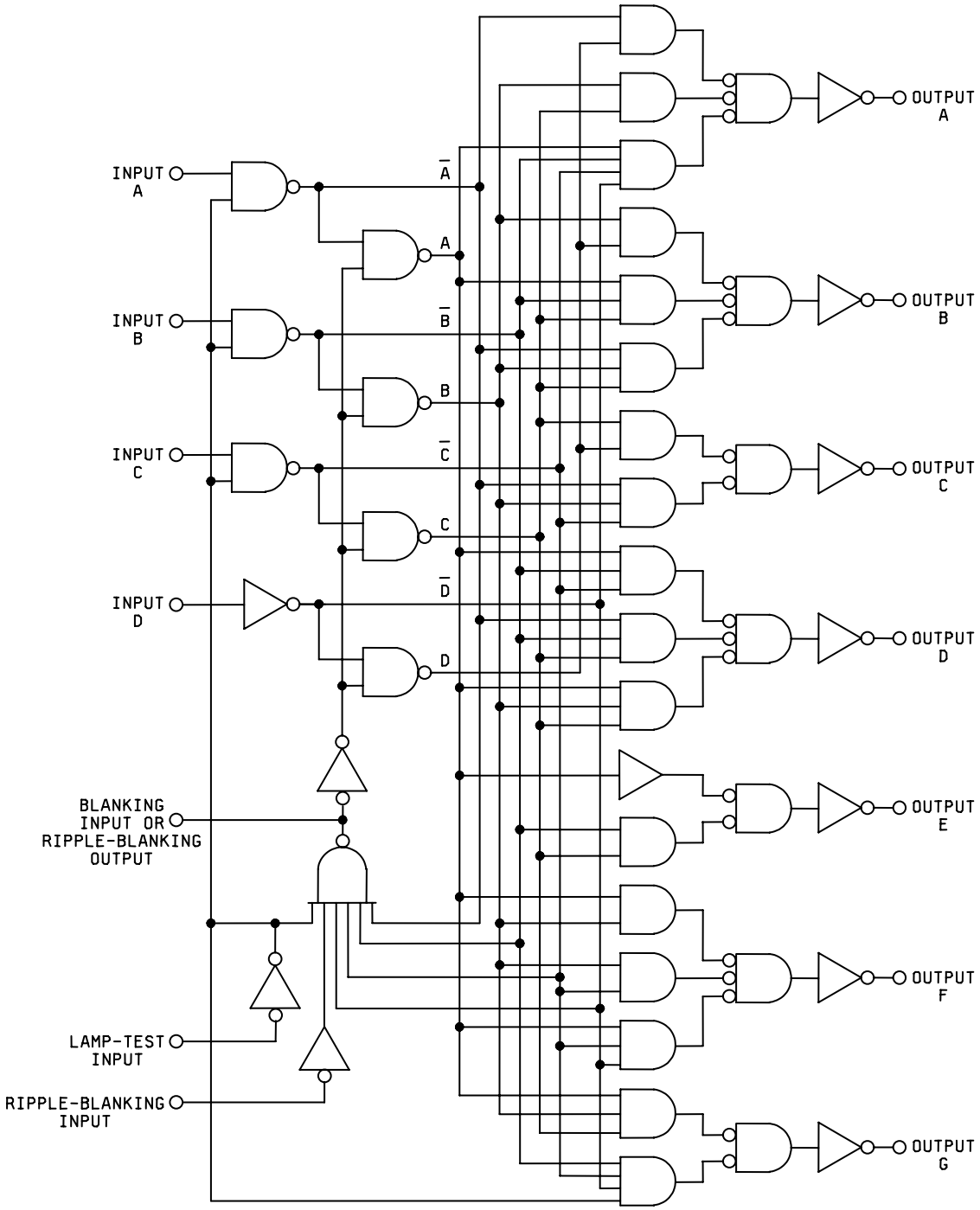

FIGURE 2. Logic diagrams - Continued.

DEVICE TYPE 08

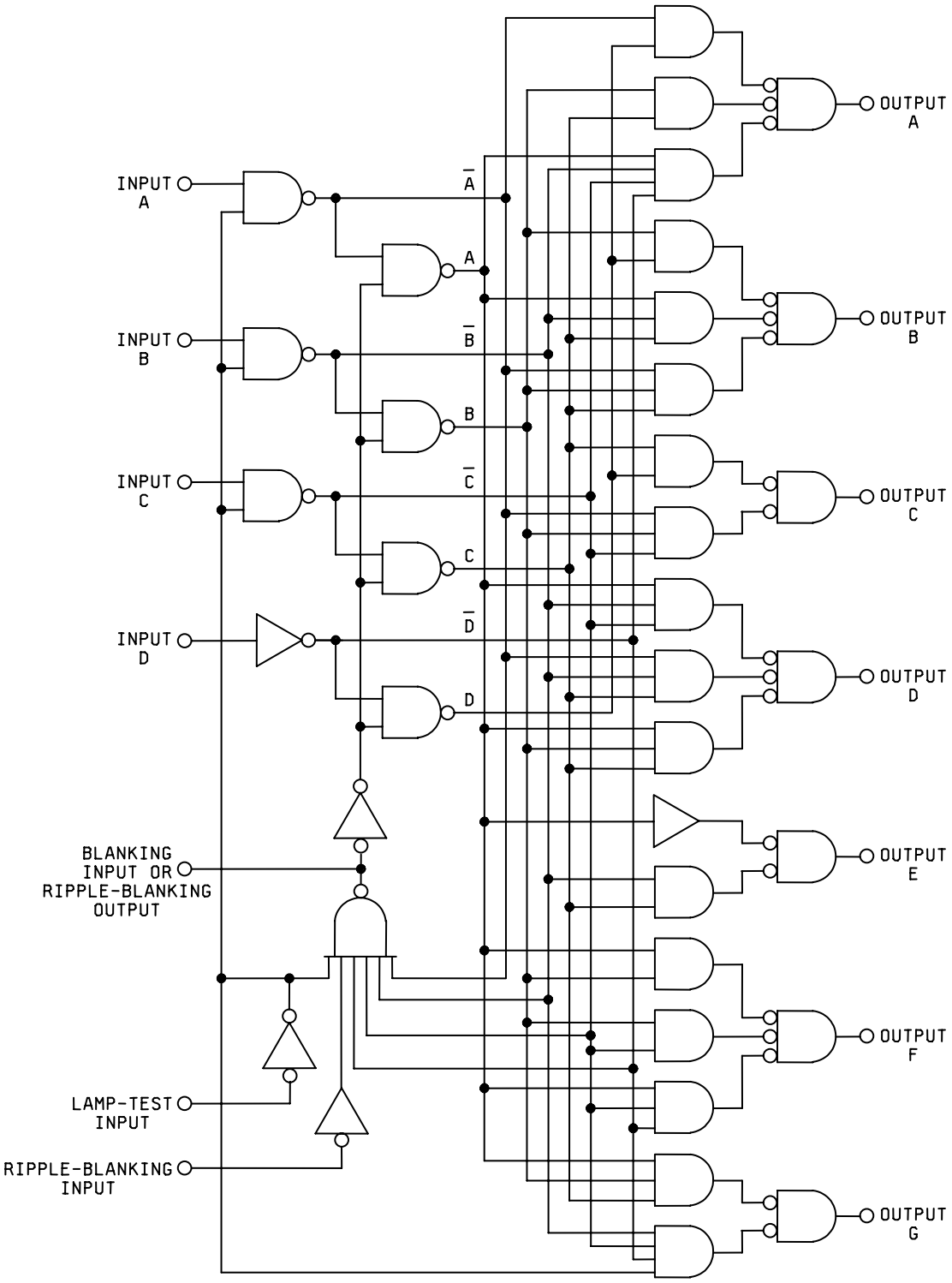

FIGURE 2. Logic diagrams - Continued.

DEVICE TYPE 09

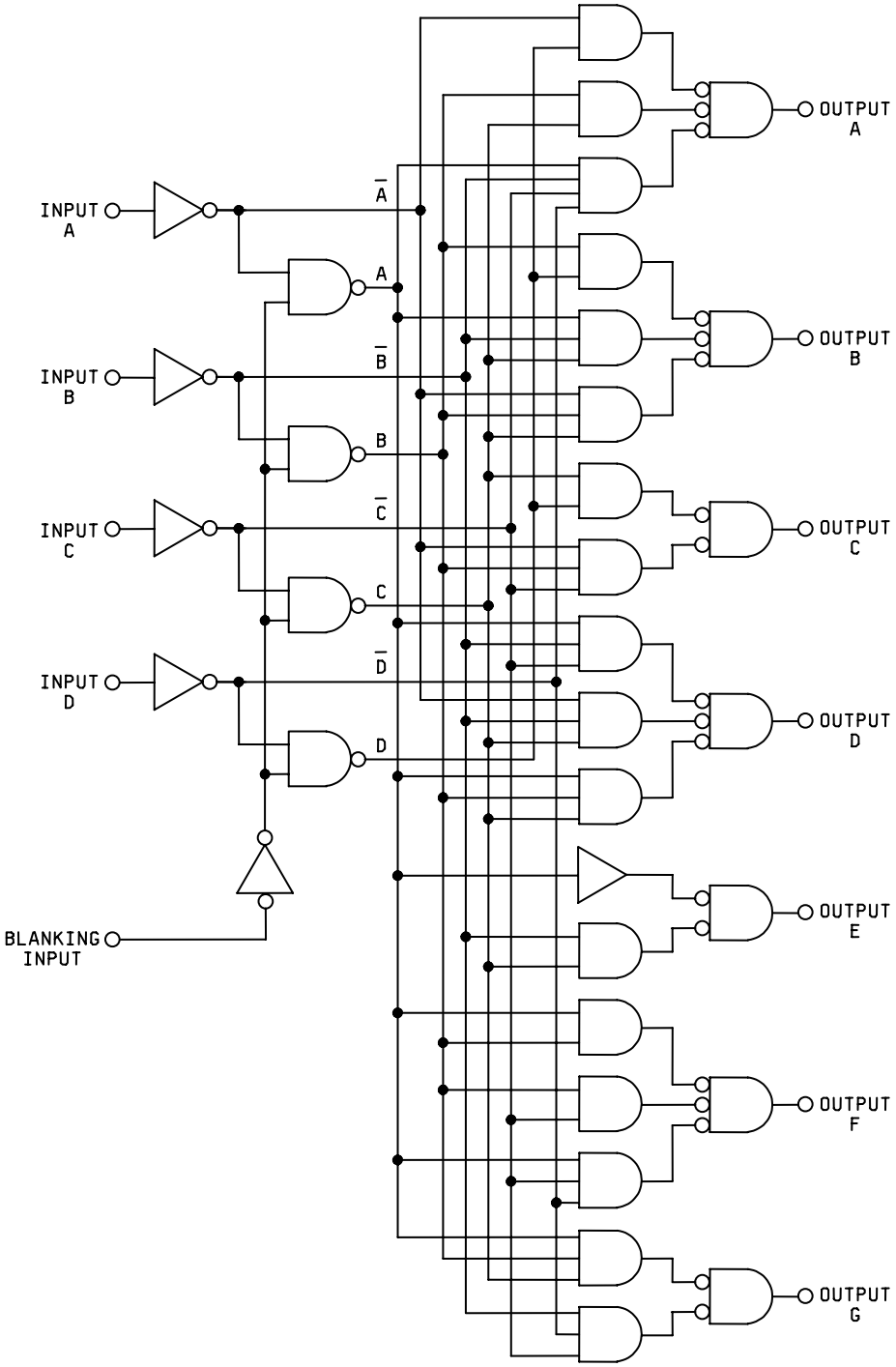

FIGURE 2. Logic diagrams - Continued.

Device types 01, 04, and 05

INPUTS				OUTPUTS									
D	C	B	A	0	1	2	3	4	5	6	7	8	9
L	L	L	L	L	H	H	H	H	H	H	H	H	H
L	L	L	H	H	L	H	H	H	H	H	H	H	H
L	L	H	L	H	H	L	H	H	H	H	H	H	H
L	L	H	H	H	H	H	L	H	H	H	H	H	H
L	H	L	L	H	H	H	H	L	H	H	H	H	H
L	H	L	H	H	H	H	H	H	L	H	H	H	H
L	H	H	L	H	H	H	H	H	H	L	H	H	H
L	H	H	H	H	H	H	H	H	H	H	L	H	H
H	L	L	L	H	H	H	H	H	H	H	H	L	H
H	L	L	H	H	H	H	H	H	H	H	H	H	L
H	L	H	L	H	H	H	H	H	H	H	H	H	H
H	L	H	H	H	H	H	H	H	H	H	H	H	H
H	H	L	L	H	H	H	H	H	H	H	H	H	H
H	H	L	H	H	H	H	H	H	H	H	H	H	H
H	H	H	L	H	H	H	H	H	H	H	H	H	H
H	H	H	H	H	H	H	H	H	H	H	H	H	H

FIGURE 3. Truth tables.

Device type 02

INPUTS				OUTPUTS									
D	C	B	A	0	1	2	3	4	5	6	7	8	9
L	L	H	H	L	H	H	H	H	H	H	H	H	H
L	H	L	L	H	L	H	H	H	H	H	H	H	H
L	H	L	H	H	H	L	H	H	H	H	H	H	H
L	H	H	L	H	H	H	L	H	H	H	H	H	H
L	H	H	H	H	H	H	H	L	H	H	H	H	H
H	L	L	L	H	H	H	H	H	L	H	H	H	H
H	L	L	H	H	H	H	H	H	H	L	H	H	H
H	L	H	L	H	H	H	H	H	H	H	L	H	H
H	L	H	H	H	H	H	H	H	H	H	H	L	H
H	H	L	L	H	H	H	H	H	H	H	H	H	L
H	H	L	H	H	H	H	H	H	H	H	H	H	H
H	H	H	L	H	H	H	H	H	H	H	H	H	H
H	H	H	H	H	H	H	H	H	H	H	H	H	H
L	L	L	L	H	H	H	H	H	H	H	H	H	H
L	L	L	H	H	H	H	H	H	H	H	H	H	H
L	L	H	L	H	H	H	H	H	H	H	H	H	H

Device type 03

INPUTS				OUTPUTS									
D	C	B	A	0	1	2	3	4	5	6	7	8	9
L	L	H	L	L	H	H	H	H	H	H	H	H	H
L	H	H	L	H	L	H	H	H	H	H	H	H	H
L	H	H	H	H	H	L	H	H	H	H	H	H	H
L	H	L	H	H	H	H	L	H	H	H	H	H	H
L	H	L	L	H	H	H	H	L	H	H	H	H	H
H	H	L	L	H	H	H	H	H	L	H	H	H	H
H	H	L	H	H	H	H	H	H	H	L	H	H	H
H	H	H	H	H	H	H	H	H	H	H	L	H	H
H	H	H	L	H	H	H	H	H	H	H	H	L	H
H	L	H	L	H	H	H	H	H	H	H	H	H	L
H	L	H	H	H	H	H	H	H	H	H	H	H	H
H	L	L	H	H	H	H	H	H	H	H	H	H	H
H	L	L	L	H	H	H	H	H	H	H	H	H	H
L	L	L	L	H	H	H	H	H	H	H	H	H	H
L	L	L	H	H	H	H	H	H	H	H	H	H	H
L	L	H	H	H	H	H	H	H	H	H	H	H	H

FIGURE 3. Truth tables - Continued.

Device types 06 and 07

DECIMAL OR FUNCTION	INPUTS							OUTPUTS							NOTE
	LT	RBI	D	C	B	A	BI/RBO	A	B	C	D	E	F	G	
0	H	H	L	L	L	L	H	L	L	L	L	L	L	H	1
1	H	X	L	L	L	H	H	H	L	L	H	H	H	H	1
2	H	X	L	L	H	L	H	L	L	H	L	L	H	L	
3	H	X	L	L	H	H	H	L	L	L	L	H	H	L	
4	H	X	L	H	L	L	H	H	L	L	H	H	L	L	
5	H	X	L	H	L	H	H	L	H	L	L	H	L	L	
6	H	X	L	H	H	L	H	H	H	L	L	L	L	L	
7	H	X	L	H	H	H	H	L	L	L	H	H	H	H	
8	H	X	H	L	L	L	H	L	L	L	L	L	L	L	
9	H	X	H	L	L	H	H	L	L	L	H	H	L	L	
10	H	X	H	L	H	L	H	H	H	H	L	L	H	L	
11	H	X	H	L	H	H	H	H	H	L	L	H	H	L	
12	H	X	H	H	L	L	H	H	L	H	H	H	L	L	
13	H	X	H	H	L	H	H	L	H	H	L	H	L	L	
14	H	X	H	H	H	L	H	H	H	H	L	L	L	L	
15	H	X	H	H	H	H	H	H	H	H	H	H	H	H	
BI	X	X	X	X	X	X	L	H	H	H	H	H	H	H	2
RBI	H	L	L	L	L	L	L	H	H	H	H	H	H	H	3
LT	L	X	X	X	X	X	H	L	L	L	L	L	L	L	4

NOTES:

1. BI/RBO is wire-OR logic serving as blanking input (BI) and/or ripple-blanking output (RBO). The blanking input must be open or held at a high logic level when output functions 0 through 15 are desired, and ripple-blanking input (RBI) must be open or at a high logic level during the decimal 0 output. X = input may be high or low.
2. When a low logic level is applied to the blanking input (forced condition) all segment outputs go to a low logic level regardless of the state of any other input condition.
3. When ripple-blanking input (RBI) is at a low logic level, lamp test input is at high logic level and A = B = C = D = low logic level, all segment outputs go to a low logic level and the ripple-blanking output goes to a low logic level (response condition).
4. When blanking input/ripple-blanking output is open or held at a high logic level, and a low logic level is applied to lamp test input, all segment outputs go to a high logic level.

FIGURE 3. Truth tables - Continued.

Device type 08

DECIMAL OR FUNCTION	INPUTS							OUTPUTS							NOTE
	LT	RBI	D	C	B	A	BI/RBO	A	B	C	D	E	F	G	
0	H	H	L	L	L	L	H	H	H	H	H	H	H	L	1
1	H	X	L	L	L	H	H	L	H	H	L	L	L	L	1
2	H	X	L	L	H	L	H	H	H	L	H	H	L	H	
3	H	X	L	L	H	H	H	H	H	H	H	L	L	H	
4	H	X	L	H	L	L	H	L	H	H	L	L	H	H	
5	H	X	L	H	L	H	H	H	L	H	H	L	H	H	
6	H	X	L	H	H	L	H	L	L	H	H	H	H	H	
7	H	X	L	H	H	H	H	H	H	H	L	L	L	L	
8	H	X	H	L	L	L	H	H	H	H	H	H	H	H	
9	H	X	H	L	L	H	H	H	H	H	L	L	H	H	
10	H	X	H	L	H	L	H	L	L	L	H	H	L	H	
11	H	X	H	L	H	H	H	L	L	H	H	L	L	H	
12	H	X	H	H	L	L	H	L	H	L	L	L	H	H	
13	H	X	H	H	L	H	H	H	L	L	H	L	H	H	
14	H	X	H	H	H	L	H	L	L	L	H	H	H	H	
15	H	X	H	H	H	H	H	L	L	L	L	L	L	L	
BI	X	X	X	X	X	X	L	L	L	L	L	L	L	L	2
RBI	H	L	L	L	L	L	L	L	L	L	L	L	L	L	3
LT	L	X	X	X	X	X	H	H	H	H	H	H	H	H	4

NOTES:

1. BI/RBO is wire-OR logic serving as blanking input (BI) and/or ripple-blanking output (RBO). The blanking input must be open or held at a high logic level when output functions 0 through 15 are desired, and ripple-blanking input (RBI) must be open or at a high logic level during the decimal 0 output. X = input may be high or low.
2. When a low logic level is applied to the blanking input (forced condition) all segment outputs go to a low logic level regardless of the state of any other input condition.
3. When ripple-blanking input (RBI) is at a low logic level, lamp test input is at high logic level and A = B = C = D = low logic level, all segment outputs go to a low logic level and the ripple-blanking output goes to a low logic level (response condition).
4. When blanking input/ripple-blanking output is open or held at a high logic level, and a low logic level is applied to lamp test input, all segment outputs go to a high logic level.

FIGURE 3. Truth tables - Continued.

Device type 09

DECIMAL OR FUNCTION	INPUTS					OUTPUTS							NOTE
	D	C	B	A	BI	A	B	C	D	E	F	G	
0	L	L	L	L	H	H	H	H	H	H	H	L	1
1	L	L	L	H	H	L	H	H	L	L	L	L	
2	L	L	H	L	H	H	H	L	H	H	L	H	
3	L	L	H	H	H	H	H	H	H	L	L	H	
4	L	H	L	L	H	L	H	H	L	L	H	H	
5	L	H	L	H	H	H	L	H	H	L	H	H	
6	L	H	H	L	H	L	L	H	H	H	H	H	
7	L	H	H	H	H	H	H	H	L	L	L	L	
8	H	L	L	L	H	H	H	H	H	H	H	H	
9	H	L	L	H	H	H	H	H	L	L	H	H	
10	H	L	H	L	H	L	L	L	H	H	L	H	
11	H	L	H	H	H	L	L	H	H	L	L	H	
12	H	H	L	L	H	L	H	L	L	L	H	H	
13	H	H	L	H	H	H	L	L	H	L	H	H	
14	H	H	H	L	H	L	L	L	H	H	H	H	
15	H	H	H	H	H	L	L	L	L	L	L	L	
BI	X	X	X	X	L	L	L	L	L	L	L	L	2

NOTES:
1. The blanking input must be open or held at a high logic level when output functions 0 through 15 are desired.
2. When a low logic level is applied to the blanking input all segment outputs go to a low logic level regardless of the state of any other input condition. X = input may be high or low.

FIGURE 3. Truth tables - Continued.

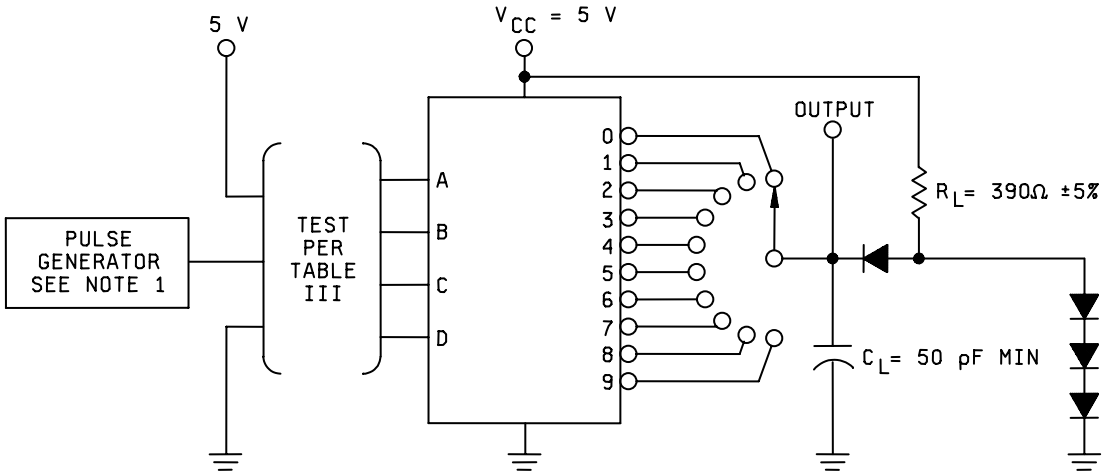

TEST CIRCUIT

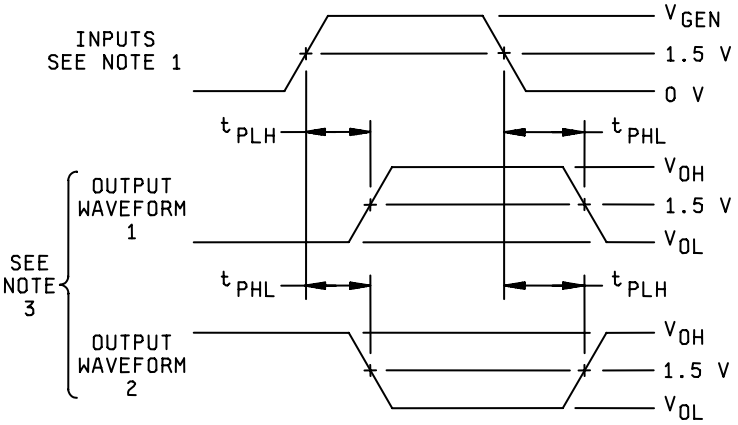

NOTES:

1. The pulse generator has the following characteristics: V_{GEN} = 3.0 V minimum, t_{TLH} (0.7 V to 2.7 V) and t_{THL} (2.7 V to 0.7 V) ≤ 10 ns, PRR = 1 MHz, and minimum duty cycle = 50%.
2. C_L includes probe and jig capacitance.
3. Input - output waveform combination in accordance with the truth tables (see figure 3).
4. All diodes are 1N3064 or equivalent.

FIGURE 4. Switching times for device types 01, 02, and 03.

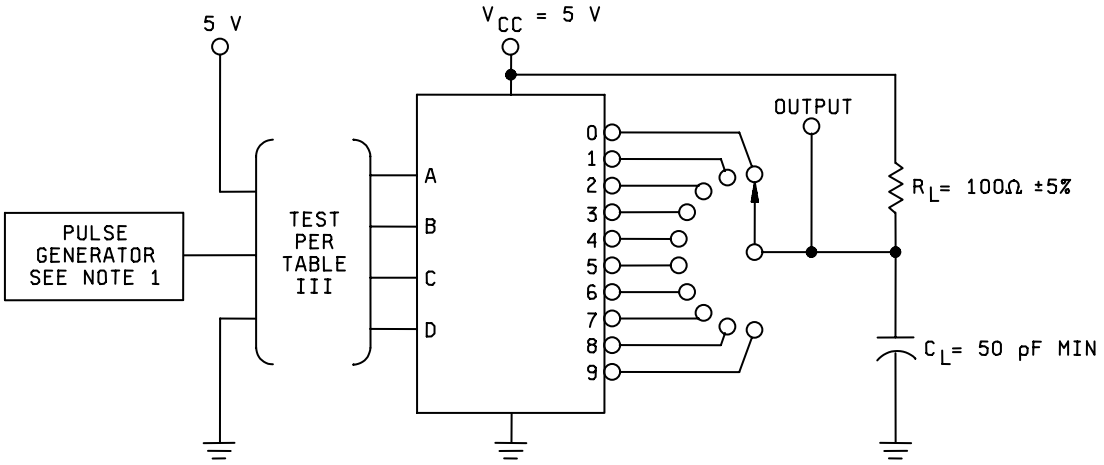

TEST CIRCUIT

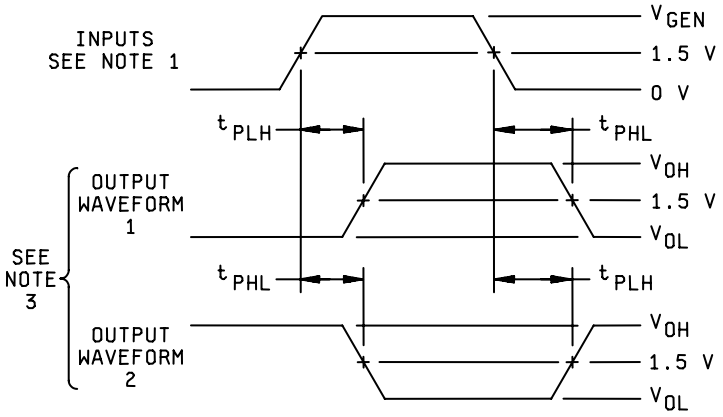

NOTES:

1. The pulse generator has the following characteristics: V_{GEN} = 3.0 V minimum, t_{TLH} (0.7 V to 2.7 V) and t_{THL} (2.7 V to 0.7 V) ≤ 10 ns, PRR = 1 MHz, and minimum duty cycle = 50%.
2. C_L includes probe and jig capacitance.
3. Input - output waveform combination in accordance with the truth tables (see figure 3).

FIGURE 5. Switching times for device types 04 and 05.

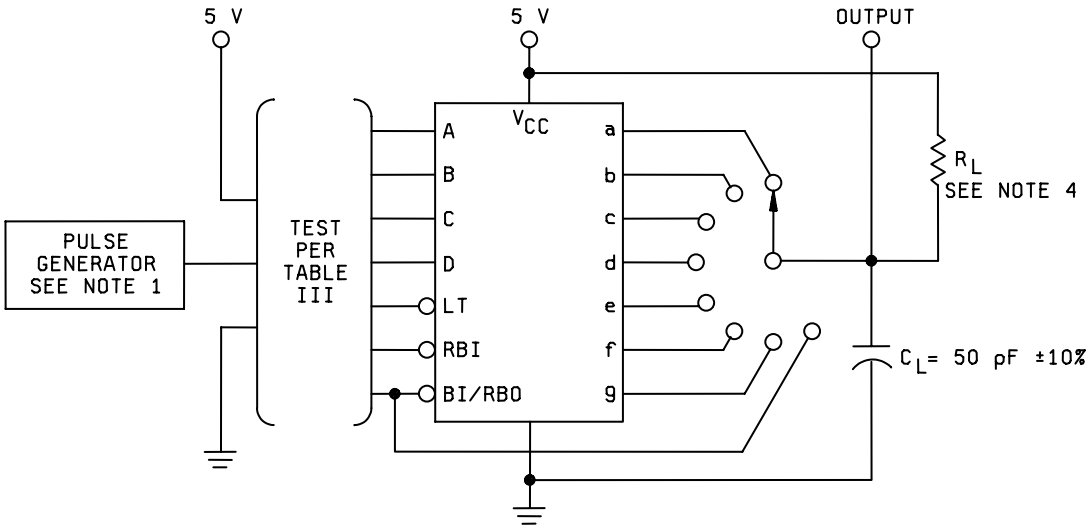

TEST CIRCUIT

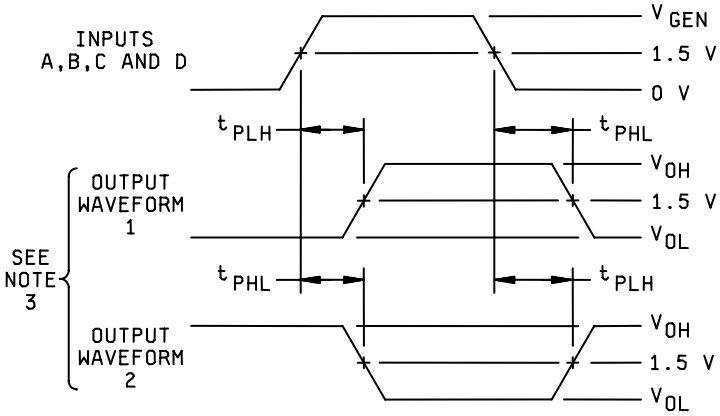

NOTES:

1. The pulse generator has the following characteristics: V_{GEN} = 3.0 V minimum, t_{TLH} (0.7 V to 2.7 V) and t_{THL} (2.7 V to 0.7 V) ≤ 10 ns, PRR = 1 MHz, and minimum duty cycle = 50%.
2. C_L includes probe and jig capacitance.
3. Input - output waveform combination in accordance with the truth tables (see figure 3).
4. R_L = 120 Ω ±5% for outputs A thru G; R_L = 560 Ω ±5% for output BI/RBO.

FIGURE 6. Switching times for device types 06 and 07.

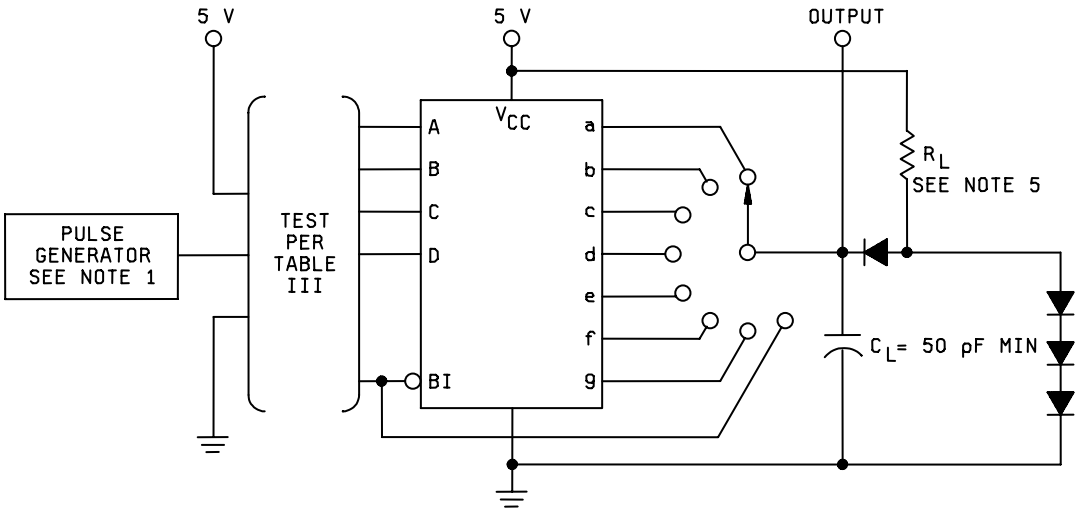

TEST CIRCUIT

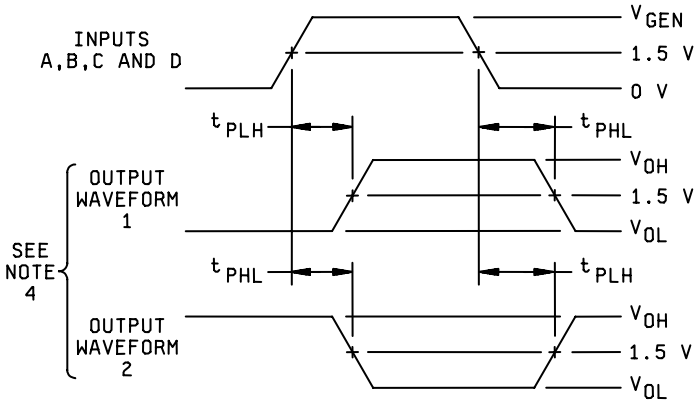

NOTES:

1. The pulse generator has the following characteristics: V_{GEN} = 3.0 V minimum, t_{TLH} (0.7 V to 2.7 V) and t_{THL} (2.7 V to 0.7 V) ≤ 10 ns, PRR = 1 MHz, and minimum duty cycle = 50%.
2. C_L includes probe and jig capacitance.
3. All diodes are 1N3064 or equivalent.
4. Input - output waveform combination in accordance with the truth tables (see figure 3).
5. R_L = 750 Ω ±5% for outputs A thru G; R_L = 560 Ω ±5% for output BI/RBO.

FIGURE 7. Switching times for device type 08.

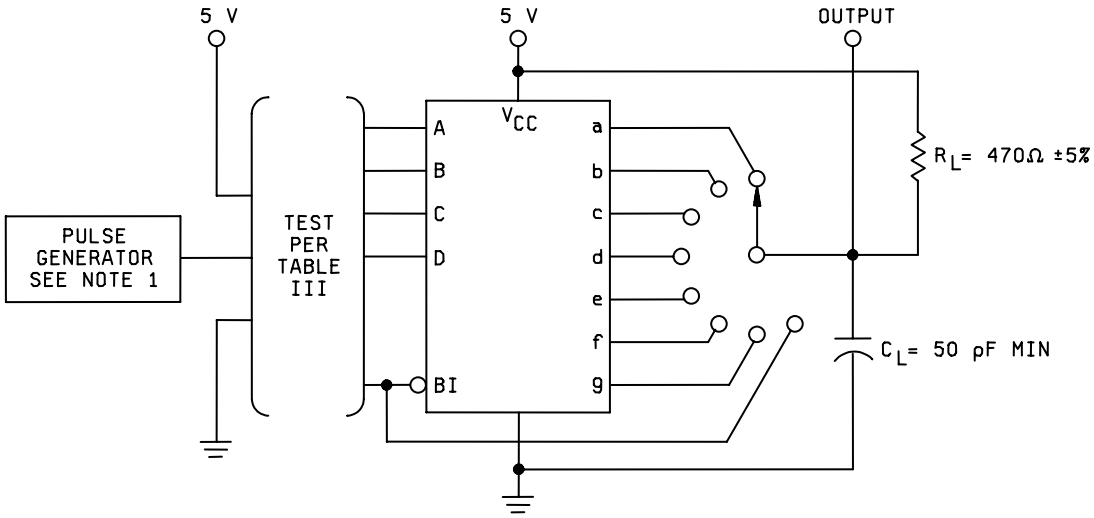

TEST CIRCUIT

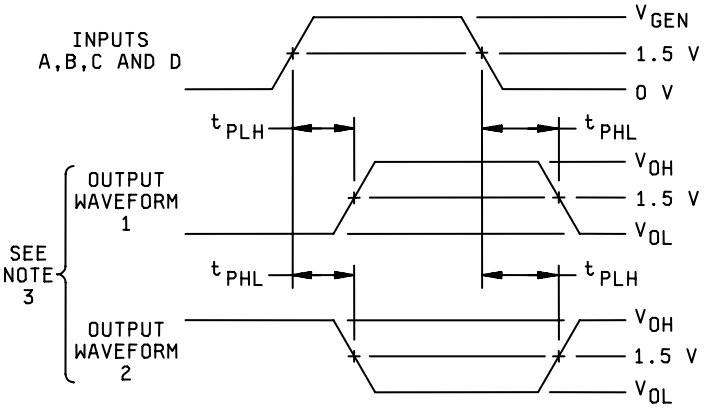

NOTES:

1. The pulse generator has the following characteristics: V_{GEN} = 3.0 V minimum, t_{TLH} (0.7 V to 2.7 V) and t_{THL} (2.7 V to 0.7 V) ≤ 10 ns, PRR = 1 MHz, and minimum duty cycle = 50%.
2. C_L includes probe and jig capacitance.
3. Input - output waveform combination in accordance with the truth tables (see figure 3).

FIGURE 8. Switching times for device type 09.

TABLE III. Group A inspection for device type 01.
Terminal conditions (pins not designated may be high ≥ 2.4 V or low ≤ 0.8 V; or open).

Subgroup	Symbol	MIL-STD-883 method	Cases E, F Test no.	1 0	2 1	3 2	4 3	5 4	6 5	7 6	8 GND	9 7	10 8	11 9	12 D	13 C	14 B	15 A	16 V_{CC}	Measured terminal	Limits Min	Limits Max	Unit
1 Tc = 25°C	V_{OH}	3006	1	-0.8 mA							GND				2.0 V	2.0 V	2.0 V	2.0 V	4.5 V	0	2.4 V		V
		"	2		-0.8 mA						"				"	"	"	"	"	1	"		"
		"	3			-0.8 mA					"				"	"	"	"	"	2	"		"
		"	4				-0.8 mA				"				"	"	"	"	"	3	"		"
		"	5					-0.8 mA			"				"	"	"	"	"	4	"		"
		"	6						-0.8 mA		"				"	"	"	"	"	5	"		"
		"	7							-0.8 mA	"				"	"	"	"	"	6	"		"
		"	8								"	-0.8 mA			"	"	"	"	"	7	"		"
		"	9								"		-0.8 mA		"	"	"	"	"	8	"		"
		"	10								"			-0.8 mA	"	"	"	"	"	9	"		"
V	V_{OL}	3007	11	16 mA							"				0.8 V	0.8 V	0.8 V	0.8 V	"	0		0.4 V	V
		"	12		16 mA						"				"	"	0.8 V	2.0 V	"	1		"	"
		"	13			16 mA					"				"	"	2.0 V	0.8 V	"	2		"	"
		"	14				16 mA				"				"	"	2.0 V	2.0 V	"	3		"	"
		"	15					16 mA			"				"	2.0 V	0.8 V	0.8 V	"	4		"	"
		"	16						16 mA		"				"	"	0.8 V	2.0 V	"	5		"	"
		"	17							16 mA	"				"	"	2.0 V	0.8 V	"	6		"	"
		"	18								"	16 mA			"	"	2.0 V	2.0 V	"	7		"	"
		"	19								"		16 mA		2.0 V	0.8 V	0.8 V	0.8 V	"	8		"	"
		"	20								"			16 mA	2.0 V	0.8 V	0.8 V	2.0 V	"	9		"	"
V	I_{C}		21								"							-12 mA	"	A		-1.5	V
			22								"						-12 mA			B		"	"
			23								"					-12 mA				C		"	"
			24								"				-12 mA					D		"	"
I	I_{IH1}	3010	25								"				GND	GND	GND	2.4 V	5.5 V	A		40	µA
		"	26								"				"	GND	2.4 V	GND	"	B		"	"
		"	27								"				"	2.4 V	GND	"	"	C		"	"
		"	28								"				2.4 V	GND	"	"	"	D		"	"
I	I_{IH2}	3010	29								"				GND	"	"	5.5 V	"	A		100	µA
		"	30								"				"	"	5.5 V	GND	"	B		"	"
		"	31								"				"	5.5 V	GND	"	"	C		"	"
		"	32								"				5.5 V	GND	GND	"	"	D		"	"
I	I_{IL}	3009	33								"				"	5.5 V	5.5 V	0.4 V	"	A	-0.7	-1.6	mA
		"	34								"				"	5.5 V	0.4 V	5.5 V	"	B	"	"	"
		"	35								"				"	0.4 V	5.5 V	"	"	C	"	"	"
		"	36								"				0.4 V	5.5 V	5.5 V	"	"	D	"	"	"
I	I_{OS}	3011	37	GND							"				5.5 V	5.5 V	5.5 V	5.5 V	"	0	-20	-55	mA
		"	38		GND						"				"	"	"	"	"	1	"	"	"
		"	39			GND					"				"	"	"	"	"	2	"	"	"
		"	40				GND				"				"	"	"	"	"	3	"	"	"
		"	41					GND			"				"	"	"	"	"	4	"	"	"
		"	42						GND		"				"	"	"	"	"	5	"	"	"
		"	43							GND	"				"	"	"	"	"	6	"	"	"
		"	44								"	GND			"	"	"	"	"	7	"	"	"
		"	45								"		GND		"	"	"	"	"	8	"	"	"
		"	46								"			GND	"	"	"	"	"	9	"	"	"
	I_{CC}	3005	47								"				GND	GND	GND	GND	"	V_{CC}		41	mA
2	Same tests, terminal conditions, and limits as subgroup 1, except T_C = +125°C and V_{IC} tests are omitted.																						
3	Same tests, terminal conditions, and limits as subgroup 1, except T_C = -55°C and V_{IC} tests are omitted.																						

See footnotes at end of device type 01.

TABLE III. Group A inspection for device type 01.

Terminal conditions (pins not designated may be high ≥ 2.4 V or low ≤ 0.8 V; or open).

Subgroup	Symbol	MIL-STD-883 method	Cases E, F Test no.	1 / 0	2 / 1	3 / 2	4 / 3	5 / 4	6 / 5	7 / 6	8 / GND	9 / 7	10 / 8	11 / 9	12 / D	13 / C	14 / B	15 / A	16 / V_{CC}	Measured terminal	Limits Min	Limits Max	Unit
7 Tc = 25°C	Truth table test		48	L	H	H	H	H	H	H	GND	H	H	H	GND	GND	GND	GND	5.0 V		See note		
			49	H	L	H	"	"	"	"	"	"	"	"	"	"	GND	5.0 V	"				
			50	"	H	L	"	"	"	"	"	"	"	"	"	"	5.0 V	GND	"				
			51	"	"	H	L	"	"	"	"	"	"	"	"	"	5.0 V	5.0 V	"				
			52	"	"	"	H	L	"	"	"	"	"	"	"	5.0 V	GND	GND	"				
			53	"	"	"	"	H	L	"	"	"	"	"	"	"	GND	5.0 V	"				
			54	"	"	"	"	"	H	L	"	"	"	"	"	"	5.0 V	GND	"				
			55	"	"	"	"	"	"	H	"	L	"	"	"	"	5.0 V	5.0 V	"				
			56	"	"	"	"	"	"	"	"	H	L	"	5.0 V	GND	GND	GND	"				
			57	"	"	"	"	"	"	"	"	"	H	L	"	"	GND	5.0 V	"				
			58	"	"	"	"	"	"	"	"	"	"	H	"	"	5.0 V	GND	"				
			59	"	"	"	"	"	"	"	"	"	"	"	"	"	5.0 V	5.0 V	"				
			60	"	"	"	"	"	"	"	"	"	"	"	"	5.0 V	GND	GND	"				
			61	"	"	"	"	"	"	"	"	"	"	"	"	"	GND	5.0 V	"				
			62	"	"	"	"	"	"	"	"	"	"	"	"	"	5.0 V	GND	"				
			63	"	"	"	"	"	"	"	"	"	"	"	"	"	5.0 V	5.0 V	"				
8	Truth table test		64 thru 79	Same tests as subgroup 7, except T_C = +125°C.																			
			80 thru 95	Same tests as subgroup 7, except T_C = -55°C.																			
9 Tc = 25°C	t_{PHL} t_{PLH}	3003 (Fig. 4)	96 & 97	OUT							GND				GND	GND	GND	IN	5.0 V	A to 0	5	32	ns
			98 & 99		OUT						"				"	GND	GND	"	"	A to 1	"	37	"
			100 & 101								"	OUT			"	5.0 V	5.0 V	"	"	A to 7	"	37	"
			102 & 103		OUT						"				"	GND	IN	5.0 V	"	B to 1	"	32	"
			104 & 105					OUT			"				"	5.0 V	"	GND	"	B to 4	"	32	"
			106 & 107			OUT					"				"	GND	"	GND	"	B to 2	"	37	"
			108 & 109			OUT					"				"	IN	5.0 V	GND	"	C to 2	"	32	"
			110 & 111				OUT				"				"	"	5.0 V	5.0 V	"	C to 3	"	"	"
			112 & 113								"		OUT		5.0 V	"	GND	GND	"	C to 8	"	"	"
			114 & 115								"			OUT	5.0 V	"	"	5.0 V	"	C to 9	"	"	"
			116 & 117					OUT			"				GND	"	"	GND	"	C to 4	"	37	"
			118 & 119						OUT		"				"	"	"	5.0 V	"	C to 5	"	"	"
			120 & 121							OUT	"				"	"	5.0 V	GND	"	C to 6	"	"	"
			122 & 123								"	OUT			"	"	"	5.0 V	"	C to 7	"	"	"
			124 & 125				OUT				"				IN	GND	"	5.0 V	"	D to 3	"	32	"
			126 & 127					OUT			"				"	5.0 V	GND	GND	"	D to 4	"	"	"
			128 & 129						OUT		"				"	"	GND	5.0 V	"	D to 5	"	"	"
			130 & 131							OUT	"				"	"	5.0 V	GND	"	D to 6	"	"	"
			132 & 133								"	OUT			"	"	5.0 V	5.0 V	"	D to 7	"	"	"
			134 & 135								"		OUT		"	GND	GND	GND	"	D to 8	"	37	"
			136 & 137								"			OUT	"	"	"	5.0 V	"	D to 9	"	37	"
10 Tc = 125°C	t_{PHL} t_{PLH}	3003 (Fig. 4)	138 & 139	OUT							"				GND	"	"	IN	"	A to 0	"	39	"
			140 & 141		OUT						"				"	"	"	"	"	A to 1	"	46	"
			142 & 143								"	OUT			"	5.0 V	5.0 V	"	"	A to 7	"	46	"
			144 & 145		OUT						"				"	GND	IN	5.0 V	"	B to 1	"	39	"
			146 & 147					OUT			"				"	5.0 V	"	GND	"	B to 4	"	39	"
			148 & 149			OUT					"				"	GND	"	GND	"	B to 2	"	46	"
			150 & 151			OUT					"				"	IN	5.0 V	GND	"	C to 2	"	39	"
			152 & 153				OUT				"				"	"	5.0 V	5.0 V	"	C to 3	"	"	"
			154 & 155								"		OUT		5.0 V	"	GND	GND	"	C to 8	"	"	"
			156 & 157								"			OUT	5.0 V	"	"	5.0 V	"	C to 9	"	"	"
			158 & 159					OUT			"				GND	"	"	GND	"	C to 4	"	46	"
			160 & 161						OUT		"				"	"	"	5.0 V	"	C to 5	"	"	"
			162 & 163							OUT	"				"	"	5.0 V	GND	"	C to 6	"	"	"
			164 & 165								"	OUT			"	"	"	5.0 V	"	C to 7	"	"	"
			166 & 167				OUT				"				IN	GND	"	5.0 V	"	D to 3	"	39	"
			168 & 169					OUT			"				"	5.0 V	GND	GND	"	D to 4	"	"	"
			170 & 171						OUT		"				"	"	GND	5.0 V	"	D to 5	"	"	"
			172 & 173							OUT	"				"	"	5.0 V	GND	"	D to 6	"	"	"
			174 & 175								"	OUT			"	"	5.0 V	5.0 V	"	D to 7	"	"	"
			176 & 177								"		OUT		"	GND	GND	GND	"	D to 8	"	46	"
			178 & 179								"			OUT	"	GND	GND	5.0 V	"	D to 9	"	46	"
11	Same tests, terminal conditions, and limits as subgroup 10, except T_C = -55°C.																						

NOTE: Output voltages shall be either: (a) H = 2.4 V minimum and L = 0.4 V maximum when using a high speed checker double comparator, or (b) H ≥ 1.5 V and L ≤ 1.5 V when using a high speed checker single comparator.

TABLE III. Group A inspection for device type 02.
Terminal conditions (pins not designated may be high ≥ 2.4 V or low ≤ 0.8 V; or open).

Subgroup	Symbol	MIL-STD-883 method	Cases E, F Test no.	1 0	2 1	3 2	4 3	5 4	6 5	7 6	8 GND	9 7	10 8	11 9	12 D	13 C	14 B	15 A	16 V_{CC}	Measured terminal	Limits Min	Limits Max	Unit
1 Tc = 25°C	V_{OH}	3006	1	-0.8 mA							GND				2.0 V	2.0 V	2.0 V	2.0 V	4.5 V	0	2.4 V		V
		"	2		-0.8 mA						"				"	"	"	"	"	1	"		"
		"	3			-0.8 mA					"				"	"	"	"	"	2	"		"
		"	4				-0.8 mA				"				"	"	"	"	"	3	"		"
		"	5					-0.8 mA			"				"	"	"	"	"	4	"		"
		"	6						-0.8 mA		"				"	"	"	"	"	5	"		"
		"	7							-0.8 mA	"				"	"	"	"	"	6	"		"
		"	8								"	-0.8 mA			"	"	"	"	"	7	"		"
		"	9								"		-0.8 mA		"	"	"	"	"	8	"		"
		"	10								"			-0.8 mA	"	"	"	"	"	9	"		"
V	V_{OL}	3007	11	16 mA							"				0.8 V	0.8 V	2.0 V	2.0 V	"	0		0.4 V	V
		"	12		16 mA						"				"	"	0.8 V	0.8 V	"	1		"	"
		"	13			16 mA					"				"	"	0.8 V	2.0 V	"	2		"	"
		"	14				16 mA				"				"	"	2.0 V	0.8 V	"	3		"	"
		"	15					16 mA			"				"	2.0 V	2.0 V	2.0 V	"	4		"	"
		"	16						16 mA		"				"	"	0.8 V	0.8 V	"	5		"	"
		"	17							16 mA	"				"	"	0.8 V	2.0 V	"	6		"	"
		"	18								"	16 mA			"	"	2.0 V	0.8 V	"	7		"	"
		"	19								"		16 mA		2.0 V	0.8 V	2.0 V	2.0 V	"	8		"	"
		"	20								"			16 mA	2.0 V	0.8 V	0.8 V	0.8 V	"	9		"	"
V	I_{C}		21								"							-12 mA	"	A		-1.5	V
			22								"						-12 mA			B		"	"
			23								"					-12 mA				C		"	"
			24								"				-12 mA					D		"	"
I	I_{IH1}	3010	25								"				GND	GND	GND	2.4 V	5.5 V	A		40	µA
		"	26								"				"	GND	2.4 V	GND	"	B		"	"
		"	27								"				"	2.4 V	GND	"	"	C		"	"
		"	28								"				2.4 V	GND	"	"	"	D		"	"
I	I_{IH2}	3010	29								"				GND	"	"	5.5 V	"	A		100	µA
		"	30								"				"	"	5.5 V	GND	"	B		"	"
		"	31								"				"	5.5 V	GND	"	"	C		"	"
		"	32								"				5.5 V	GND	GND	"	"	D		"	"
I	I_{IL}	3009	33								"				"	5.5 V	5.5 V	0.4 V	"	A	-0.7	-1.6	mA
		"	34								"				"	5.5 V	0.4 V	5.5 V	"	B	"	"	"
		"	35								"				"	0.4 V	5.5 V	"	"	C	"	"	"
		"	36								"				0.4 V	5.5 V	5.5 V	"	"	D	"	"	"
I	I_{OS}	3011	37	GND							"				5.5 V	5.5 V	5.5 V	5.5 V	"	0	-20	-55	mA
		"	38		GND						"				"	"	"	"	"	1	"	"	"
		"	39			GND					"				"	"	"	"	"	2	"	"	"
		"	40				GND				"				"	"	"	"	"	3	"	"	"
		"	41					GND			"				"	"	"	"	"	4	"	"	"
		"	42						GND		"				"	"	"	"	"	5	"	"	"
		"	43							GND	"				"	"	"	"	"	6	"	"	"
		"	44								"	GND			"	"	"	"	"	7	"	"	"
		"	45								"		GND		"	"	"	"	"	8	"	"	"
		"	46								"			GND	"	"	"	"	"	9	"	"	"
	I_{CC}	3005	47								"				GND	GND	GND	GND	"	V_{CC}		41	mA
2	Same tests, terminal conditions, and limits as subgroup 1, except T_C = +125°C and V_{IC} tests are omitted.																						
3	Same tests, terminal conditions, and limits as subgroup 1, except T_C = -55°C and V_{IC} tests are omitted.																						

See footnotes at end of device type 01.

TABLE III. Group A inspection for device type 02.
Terminal conditions (pins not designated may be high ≥ 2.4 V or low ≤ 0.8 V; or open).

Subgroup	Symbol	MIL-STD-883 method	Cases E, F Test no.	1 / 0	2 / 1	3 / 2	4 / 3	5 / 4	6 / 5	7 / 6	8 / GND	9 / 7	10 / 8	11 / 9	12 / D	13 / C	14 / B	15 / A	16 / V_{CC}	Measured terminal	Limits Min	Limits Max	Unit
7 Tc = 25°C	Truth table test		48	L	H	H	H	H	H	H	GND	H	H	H	GND	GND	5.0 V	5.0 V	5.0 V				
			49	H	L	H	"	"	"	"	"	"	"	"	"	5.0 V	GND	GND	"				
			50	"	H	L	"	"	"	"	"	"	"	"	"	"	GND	5.0 V	"				
			51	"	"	H	L	"	"	"	"	"	"	"	"	"	5.0 V	GND	"				
			52	"	"	"	H	L	"	"	"	"	"	"	"	"	5.0 V	5.0 V	"				
			53	"	"	"	"	H	L	"	"	"	"	"	5.0 V	GND	GND	GND	"		See		
			54	"	"	"	"	"	H	L	"	"	"	"	"	"	GND	5.0 V	"		note		
			55	"	"	"	"	"	"	H	"	L	"	"	"	"	5.0 V	GND	"				
			56	"	"	"	"	"	"	"	"	H	L	"	"	"	5.0 V	5.0 V	"				
			57	"	"	"	"	"	"	"	"	"	H	L	"	5.0 V	GND	GND	"				
			58	"	"	"	"	"	"	"	"	"	"	H	"	"	GND	5.0 V	"				
			59	"	"	"	"	"	"	"	"	"	"	"	"	"	5.0 V	GND	"				
			60	"	"	"	"	"	"	"	"	"	"	"	"	"	5.0 V	5.0 V	"				
			61	"	"	"	"	"	"	"	"	"	"	"	GND	GND	GND	GND	"				
			62	"	"	"	"	"	"	"	"	"	"	"	"	"	GND	5.0 V	"				
			63	"	"	"	"	"	"	"	"	"	"	"	"	"	5.0 V	GND	"				
8	Truth table test		64 thru 79	Same tests as subgroup 7, except T_C = +125°C.																			
			80 thru 95	Same tests as subgroup 7, except T_C = -55°C.																			
9 Tc = 25°C	t_{PHL} t_{PLH}	3003 (Fig. 4)	96 & 97		OUT						GND				GND	5.0 V	GND	IN	5.0 V	A to 1	5	32	ns
			98 & 99								"	OUT			5.0 V	GND	5.0 V	"	"	A to 7	"	"	"
		"	100 & 101								"			OUT	5.0 V	5.0 V	GND	"	"	A to 9	"	"	"
		"	102 & 103	OUT							"				GND	GND	5.0 V	"	"	A to 0	"	37	"
		"	104 & 105							OUT	"				5.0 V	GND	GND	"	"	A to 6	"	37	"
		"	106 & 107			OUT					"				GND	5.0 V	IN	5.0 V	"	B to 2	"	32	"
		"	108 & 109							OUT	"				5.0 V	GND	"	5.0 V	"	B to 6	"	32	"
		"	110 & 111								"			OUT	5.0 V	5.0 V	"	GND	"	B to 9	"	32	"
		"	112 & 113				OUT				"				GND	5.0 V	"	GND	"	B to 3	"	37	"
		"	114 & 115								"	OUT			5.0 V	GND	"	GND	"	B to 7	"	37	"
		"	116 & 117								"		OUT		5.0 V	GND	"	5.0 V	"	B to 8	"	37	"
		"	118 & 119	OUT							"				GND	IN	5.0 V	5.0 V	"	C to 0	"	32	"
		"	120 & 121						OUT		"				5.0 V	"	GND	GND	"	C to 5	"	32	"
		"	122 & 123								"		OUT		5.0 V	"	5.0 V	5.0 V	"	C to 8	"	32	"
		"	124 & 125		OUT						"				GND	"	GND	GND	"	C to 1	"	37	"
		"	126 & 127			OUT					"				GND	"	GND	5.0 V	"	C to 2	"	"	"
		"	128 & 129					OUT			"				GND	"	5.0 V	5.0 V	"	C to 4	"	"	"
		"	130 & 131								"			OUT	5.0 V	"	GND	GND	"	C to 9	"	"	"
		"	132 & 133				OUT				"				IN	5.0 V	5.0 V	GND	"	D to 3	"	32	"
		"	134 & 135					OUT			"				"	5.0 V	5.0 V	5.0 V	"	D to 4	"	32	"
		"	136 &137						OUT		"				"	GND	GND	GND	"	D to 5	"	37	"
		"	138 & 139							OUT	"				"	"	"	5.0 V	"	D to 6	"	"	"
		"	140 & 141								"	OUT			"	"	5.0 V	GND	"	D to 7	"	"	"
		"	142 & 143								"		OUT		"	"	5.0 V	5.0 V	"	D to 8	"	"	"

See notes at end of device type 02.

TABLE III. Group A inspection for device type 02.
Terminal conditions (pins not designated may be high ≥ 2.4 V or low ≤ 0.8 V; or open).

Subgroup	Symbol	MIL-STD-883 method	Cases E, F Test no.	1 0	2 1	3 2	4 3	5 4	6 5	7 6	8 GND	9 7	10 8	11 9	12 D	13 C	14 B	15 A	16 V_{CC}	Measured terminal	Limits Min	Limits Max	Unit
10	t_{PHL}	3003	144 & 145		OUT						GND				GND	5.0 V	GND	IN	5.0 V	A to 1	5	39	ns
Tc = 125°C	t_{PLH}	(Fig. 4)	146 & 147								"	OUT			5.0 V	GND	5.0 V	"	"	A to 7	"	"	"
		"	148 & 149								"			OUT	5.0 V	5.0 V	GND	"	"	A to 9	"	"	"
		"	150 & 151	OUT							"				GND	GND	5.0 V	"	"	A to 0	"	46	"
		"	152 & 153							OUT	"				5.0 V	GND	GND	"	"	A to 6	"	46	"
		"	154 & 155			OUT					"				GND	5.0 V	IN	5.0 V	"	B to 2	"	39	"
		"	156 & 157							OUT	"				5.0 V	GND	"	5.0 V	"	B to 6	"	39	"
		"	158 & 159								"			OUT	5.0 V	5.0 V	"	GND	"	B to 9	"	39	"
		"	160 & 161				OUT				"				GND	5.0 V	"	GND	"	B to 3	"	46	"
		"	162 & 163								"	OUT			5.0 V	GND	"	GND	"	B to 7	"	46	"
		"	164 & 165								"		OUT		5.0 V	GND	"	5.0 V	"	B to 8	"	46	"
		"	166 & 167	OUT							"				GND	IN	5.0 V	5.0 V	"	C to 0	"	39	"
		"	168 & 169						OUT		"				5.0 V	"	GND	GND	"	C to 5	"	39	"
		"	170 & 171								"		OUT		5.0 V	"	5.0 V	5.0 V	"	C to 8	"	39	"
		"	172 & 173		OUT						"				GND	"	GND	GND	"	C to 1	"	46	"
		"	174 & 175			OUT					"				GND	"	GND	5.0 V	"	C to 2	"	"	"
		"	176 & 177					OUT			"				GND	"	5.0 V	5.0 V	"	C to 4	"	"	"
		"	178 & 179								"			OUT	5.0 V	"	GND	GND	"	C to 9	"	"	"
		"	180 & 181				OUT				"				IN	5.0 V	5.0 V	GND	"	D to 3	"	34	"
		"	182 & 183					OUT			"				"	5.0 V	5.0 V	5.0 V	"	D to 4	"	34	"
		"	184 & 185						OUT		"				"	GND	GND	GND	"	D to 5	"	46	"
		"	186 & 187							OUT	"				"	"	"	5.0 V	"	D to 6	"	"	"
		"	188 & 189								"	OUT			"	"	5.0 V	GND	"	D to 7	"	"	"
		"	190 & 191								"		OUT		"	"	5.0 V	5.0 V	"	D to 8	"	"	"
11	Same tests, terminal conditions, and limits as subgroup 10, except T_C = -55°C.																						

NOTE: Output voltages shall be either: (a) H = 2.4 V minimum and L = 0.4 V maximum when using a high speed checker double comparator, or (b) H ≥ 1.5 V and L ≤ 1.5 V when using a high speed checker single comparator.

TABLE III. Group A inspection for device type 03.
Terminal conditions (pins not designated may be high ≥ 2.4 V or low ≤ 0.8 V; or open).

Subgroup	Symbol	MIL-STD-883 method	Cases E, F Test no.	1 0	2 1	3 2	4 3	5 4	6 5	7 6	8 GND	9 7	10 8	11 9	12 D	13 C	14 B	15 A	16 V_{CC}	Measured terminal	Limits Min	Limits Max	Unit
1	V_{OH}	3006	1	-0.8 mA							GND				0.8 V	0.8 V	0.8 V	0.8 V	4.5 V	0	2.4 V		V
Tc = 25°C		"	2		-0.8 mA						"				"	"	"	"	"	1	"		"
		"	3			-0.8 mA					"				"	"	"	"	"	2	"		"
		"	4				-0.8 mA				"				"	"	"	"	"	3	"		"
		"	5					-0.8 mA			"				"	"	"	"	"	4	"		"
		"	6						-0.8 mA		"				"	"	"	"	"	5	"		"
		"	7							-0.8 mA	"				"	"	"	"	"	6	"		"
		"	8								"	-0.8 mA			"	"	"	"	"	7	"		"
		"	9								"		-0.8 mA		"	"	"	"	"	8	"		"
		"	10								"			-0.8 mA	"	"	"	"	"	9	"		"
	V_{OL}	3007	11	16 mA							"				0.8 V	0.8 V	2.0 V	0.8 V	"	0		0.4 V	V
		"	12		16 mA						"				"	2.0 V	"	0.8 V	"	1		"	"
		"	13			16 mA					"				"	"	"	2.0 V	"	2		"	"
V		"	14				16 mA				"				"	"	0.8 V	2.0 V	"	3		"	"
		"	15					16 mA			"				"	"	"	0.8 V	"	4		"	"
		"	16						16 mA		"				2.0 V	"	"	0.8 V	"	5		"	"
		"	17							16 mA	"				"	"	"	2.0 V	"	6		"	"
		"	18								"	16 mA			"	"	2.0 V	2.0 V	"	7		"	"
		"	19								"		16 mA		"	"	"	0.8 V	"	8		"	"
		"	20								"			16 mA	"	0.8 V	"	0.8 V	"	9		"	"
	I_C		21								"							-12 mA	"	A		-1.5	V
			22								"						-12 mA			B		"	"
			23								"					-12 mA				C		"	"
V			24								"				-12 mA					D		"	"
	I_{IH1}	3010	25								"				GND	GND	GND	2.4 V	5.5 V	A		40	µA
		"	26								"				"	GND	2.4 V	GND	"	B		"	"
		"	27								"				"	2.4 V	GND	"	"	C		"	"
I		"	28								"				2.4 V	GND	"	"	"	D		"	"
	I_{IH2}	3010	29								"				GND	"	"	5.5 V	"	A		100	"
		"	30								"				"	"	5.5 V	GND	"	B		"	"
		"	31								"				"	5.5 V	GND	"	"	C		"	"
I		"	32								"				5.5 V	GND	GND	"	"	D		"	"
	I_{IL}	3009	33								"				"	5.5 V	5.5 V	0.4 V	"	A	-0.7	-1.6	mA
		"	34								"				"	5.5 V	0.4 V	5.5 V	"	B	"	"	"
		"	35								"				"	0.4 V	5.5 V	"	"	C	"	"	"
I		"	36								"				0.4 V	5.5 V	5.5 V	"	"	D	"	"	"
	I_{OS}	3011	37	GND							"				GND	GND	GND	GND	"	0	-20	-55	mA
		"	38		GND						"				"	"	"	"	"	1	"	"	"
		"	39			GND					"				"	"	"	"	"	2	"	"	"
I		"	40				GND				"				"	"	"	"	"	3	"	"	"
		"	41					GND			"				"	"	"	"	"	4	"	"	"
		"	42						GND		"				"	"	"	"	"	5	"	"	"
		"	43							GND	"				"	"	"	"	"	6	"	"	"
		"	44								"	GND			"	"	"	"	"	7	"	"	"
		"	45								"		GND		"	"	"	"	"	8	"	"	"
		"	46								"			GND	"	"	"	"	"	9	"	"	"
	I_{CC}	3005	47								"				GND	GND	GND	GND	"	V_{CC}		41	mA
2	Same tests, terminal conditions, and limits as subgroup 1, except T_C = +125°C and V_{IC} tests are omitted.																						
3	Same tests, terminal conditions, and limits as subgroup 1, except T_C = -55°C and V_{IC} tests are omitted.																						

See footnotes at end of device type 03.

TABLE III. Group A inspection for device type 03.
Terminal conditions (pins not designated may be high ≥ 2.4 V or low ≤ 0.8 V; or open).

Subgroup	Symbol	MIL-STD-883 method	Cases E, F	1	2	3	4	5	6	7	8	9	10	11	12	13	14	15	16	Measured terminal	Limits		Unit
			Test no.	0	1	2	3	4	5	6	GND	7	8	9	D	C	B	A	V_{CC}		Min	Max	
7 Tc = 25°C	Truth table test		48	L	H	H	H	H	H	H	GND	H	H	H	GND	GND	5.0 V	GND	5.0 V		See note		
			49	H	L	H	"	"	"	"	"	"	"	"	"	5.0 V	5.0 V	GND	"				
			50	"	H	L	"	"	"	"	"	"	"	"	"	"	5.0 V	5.0 V	"				
			51	"	"	H	L	"	"	"	"	"	"	"	"	"	GND	5.0 V	"				
			52	"	"	"	H	L	"	"	"	"	"	"	"	"	"	GND	"				
			53	"	"	"	"	H	L	"	"	"	"	"	5.0 V	"	"	GND	"				
			54	"	"	"	"	"	H	L	"	"	"	"	"	"	"	5.0 V	"				
			55	"	"	"	"	"	"	H	"	L	"	"	"	"	5.0 V	5.0 V	"				
			56	"	"	"	"	"	"	"	"	H	L	"	"	"	"	GND	"				
			57	"	"	"	"	"	"	"	"	"	H	L	"	GND	"	GND	"				
			58	"	"	"	"	"	"	"	"	"	"	H	"	"	"	5.0 V	"				
			59	"	"	"	"	"	"	"	"	"	"	"	"	"	GND	5.0 V	"				
			60	"	"	"	"	"	"	"	"	"	"	"	"	"	"	GND	"				
			61	"	"	"	"	"	"	"	"	"	"	"	GND	"	"	GND	"				
			62	"	"	"	"	"	"	"	"	"	"	"	"	"	"	5.0 V	"				
			63	"	"	"	"	"	"	"	"	"	"	"	"	"	5.0 V	5.0 V	"				
8	Truth table test		64 thru 79	Same tests as subgroup 7, except T_C = +125°C.																			
			80 thru 95	Same tests as subgroup 7, except T_C = -55°C.																			
9 Tc = 25°C	t_{PHL} t_{PLH}	3003 (Fig. 4)	96 & 97	OUT							GND				GND	GND	5.0 V	IN	5.0 V	A to 0	5	32	ns
			98 & 99								"		OUT		5.0 V	5.0 V	5.0 V	IN	"	A to 8	"	32	"
			100 & 101			OUT					"				GND	"	5.0 V	IN	"	A to 2	"	37	"
			102 & 103				OUT				"				GND	"	IN	5.0 V	"	B to 3	"	32	"
			104 & 105					OUT			"				GND	"	"	GND	"	B to 4	"	"	"
			106 & 107						OUT		"				5.0 V	"	"	GND	"	B to 5	"	"	"
			108 & 109							OUT	"				5.0 V	"	"	5.0 V	"	B to 6	"	"	"
			110 & 111	OUT							"				GND	GND	"	GND	"	B to 0	"	37	"
			112 & 113		OUT						"				GND	5.0 V	"	GND	"	B to 1	"	"	"
			114 & 115			OUT					"				GND	5.0 V	"	5.0 V	"	B to 2	"	"	"
			116 & 117								"		OUT		5.0 V	5.0 V	"	GND	"	B to 8	"	"	"
			118 & 119								"			OUT	5.0 V	IN	5.0 V	GND	"	C to 9	"	32	"
			120 & 121		OUT						"				GND	"	5.0 V	GND	"	C to 1	"	37	"
			122 & 123				OUT				"				GND	"	GND	5.0 V	"	C to 3	"	"	"
			124 & 125					OUT			"				GND	"	"	GND	"	C to 4	"	"	"
			126 & 127						OUT		"				5.0 V	"	"	GND	"	C to 5	"	"	"
			128 & 129							OUT	"				5.0 V	"	"	5.0 V	"	C to 6	"	"	"
			130 & 131								"	OUT			5.0 V	"	5.0 V	5.0 V	"	C to 7	"	"	"
			132 & 133		OUT						"				IN	5.0 V	5.0 V	GND	"	D to 1	"	32	"
			134 & 135			OUT					"				"	"	5.0 V	5.0 V	"	D to 2	"	32	"
			136 &137					OUT			"				"	"	GND	5.0 V	"	D to 4	"	32	"
			138 & 139						OUT		"				"	"	GND	GND	"	D to 5	"	37	"
			140 & 141							OUT	"				"	"	GND	5.0 V	"	D to 6	"	"	"
			142 & 143								"	OUT			"	"	5.0 V	5.0 V	"	D to 7	"	"	"
			144 & 145								"			OUT	"	GND	5.0 V	GND	"	D to 9	"	"	"

See notes at end of device type 03.

TABLE III. Group A inspection for device type 03.
Terminal conditions (pins not designated may be high ≥ 2.4 V or low ≤ 0.8 V; or open).

Subgroup	Symbol	MIL-STD-883 method	Cases E, F Test no.	1 0	2 1	3 2	4 3	5 4	6 5	7 6	8 GND	9 7	10 8	11 9	12 D	13 C	14 B	15 A	16 V_{CC}	Measured terminal	Limits Min	Limits Max	Unit
10	t_{PHL}	3003	146 & 147	OUT							GND				GND	GND	5.0 V	IN	5.0 V	A to 0	5	39	ns
Tc = 125°C	t_{PLH}	(Fig. 4)	148 & 149								"		OUT		5.0 V	5.0 V	5.0 V	IN	"	A to 8	"	39	"
		"	150 & 151			OUT					"				GND	"	5.0 V	IN	"	A to 2	"	46	"
		"	152 & 153				OUT				"				GND	"	IN	5.0 V	"	B to 3	"	39	"
		"	154 & 155					OUT			"				GND	"	"	GND	"	B to 4	"	"	"
		"	156 & 157						OUT		"				5.0 V	"	"	GND	"	B to 5	"	"	"
		"	158 & 159							OUT	"				5.0 V	"	"	5.0 V	"	B to 6	"	"	"
		"	160 & 161	OUT							"				GND	GND	"	GND	"	B to 0	"	46	"
		"	162 & 163		OUT						"				GND	5.0 V	"	GND	"	B to 1	"	"	"
		"	164 & 165			OUT					"				GND	5.0 V	"	5.0 V	"	B to 2	"	"	"
		"	166 & 167								"		OUT		5.0 V	5.0 V	"	GND	"	B to 8	"	"	"
		"	168 & 169								"			OUT	5.0 V	IN	5.0 V	GND	"	C to 9	"	39	"
		"	170 & 171		OUT						"				GND	"	5.0 V	GND	"	C to 1	"	46	"
		"	172 & 173				OUT				"				GND	"	GND	5.0 V	"	C to 3	"	"	"
		"	174 & 175					OUT			"				GND	"	"	GND	"	C to 4	"	"	"
		"	176 & 177						OUT		"				5.0 V	"	"	GND	"	C to 5	"	"	"
		"	178 & 179							OUT	"				5.0 V	"	"	5.0 V	"	C to 6	"	"	"
		"	180 & 181								"	OUT			5.0 V	"	5.0 V	5.0 V	"	C to 7	"	"	"
		"	182 & 183		OUT						"				IN	5.0 V	5.0 V	GND	"	D to 1	"	39	"
		"	184 & 185			OUT					"				"	"	5.0 V	5.0 V	"	D to 2	"	39	"
		"	186 &187					OUT			"				"	"	GND	5.0 V	"	D to 4	"	39	"
		"	188 & 189						OUT		"				"	"	GND	GND	"	D to 5	"	46	"
		"	190 & 191							OUT	"				"	"	GND	5.0 V	"	D to 6	"	"	"
		"	192 & 193								"	OUT			"	"	5.0 V	5.0 V	"	D to 7	"	"	"
		"	194 & 195								"			OUT	"	GND	5.0 V	GND	"	D to 9	"	"	"
11	Same tests, terminal conditions, and limits as subgroup 10, except T_C = -55°C.																						

NOTE: Output voltages shall be either: (a) H = 2.4 V minimum and L = 0.4 V maximum when using a high speed checker double comparator, or (b) H ≥ 1.5 V and L ≤ 1.5 V when using a high speed checker single comparator.

TABLE III. Group A inspection for device type 04 and 05.
Terminal conditions (pins not designated may be high ≥ 2.4 V or low ≤ 0.8 V; or open).

Subgroup	Symbol	MIL-STD-883 method	Cases E, F Test no.	1 0	2 1	3 2	4 3	5 4	6 5	7 6	8 GND	9 7	10 8	11 9	12 D	13 C	14 B	15 A	16 V_{CC}	Measured terminal	Limits Min	Limits Max	Unit
1 Tc = 25°C	V_{OL}	3007	1	80 mA							GND				0.8 V	0.8 V	0.8 V	0.8 V	4.5 V	0		0.9	V
		"	2		mA						"				"	"	0.8 V	2.0 V	"	1		"	"
		"	3			80 mA					"				"	"	2.0 V	0.8 V	"	2		"	"
		"	4	80			80 mA				"				"	"	2.0 V	2.0 V	"	3		"	"
		"	5					80 mA			"				"	2.0 V	0.8 V	0.8 V	"	4		"	"
		"	6						80 mA		"				"	"	0.8 V	2.0 V	"	5		"	"
		"	7							80 mA	"				"	"	2.0 V	0.8 V	"	6		"	"
		"	8								"	80 mA			"	"	2.0 V	2.0 V	"	7		"	"
		"	9								"		80 mA		2.0 V	0.8 V	0.8 V	0.8 V	"	8		"	"
		"	10								"			80 mA	2.0 V	0.8 V	0.8 V	2.0 V	"	9		"	"
	$_{OL2}$	3007	11	20 mA							"				0.8 V	0.8 V	0.8 V	0.8 V	"	0		0.4 V	V
		"	12		20 mA						"				"	"	0.8 V	2.0 V	"	1		"	"
		"	13			20 mA					"				"	"	2.0 V	0.8 V	"	2		"	"
V		"	14				20 mA				"				"	"	2.0 V	2.0 V	"	3		"	"
		"	15					20 mA			"				"	2.0 V	0.8 V	0.8 V	"	4		"	"
		"	16						20 mA		"				"	"	0.8 V	2.0 V	"	5		"	"
		"	17							20 mA	"				"	"	2.0 V	0.8 V	"	6		"	"
		"	18								"	20 mA			"	"	2.0 V	2.0 V	"	7		"	"
		"	19								"		20 mA		2.0 V	0.8 V	0.8 V	0.8 V	"	8		"	"
		"	20								"			20 mA	2.0 V	0.8 V	0.8 V	2.0 V	"	9		"	"
	$_{CEX}$		21	Y							"				2.0 V	2.0 V	2.0 V	2.0 V	"	0		250	µA
	_/		22		Y						"				"	"	"	"	"	1		"	"
			23			Y					"				"	"	"	"	"	2		"	"
I			24				Y				"				"	"	"	"	"	3		"	"
1			25					Y			"				"	"	"	"	"	4		"	"
			26						Y		"				"	"	"	"	"	5		"	"
			27							Y	"				"	"	"	"	"	6		"	"
			28								"	Y			"	"	"	"	"	7		"	"
			29								"		Y		"	"	"	"	"	8		"	"
			30								"			Y	"	"	"	"	"	9		"	"
	I C		31								"							-12 mA	"	A		-1.5	V
			32								"						-12 mA			B		"	"
			33								"					-12 mA				C		"	"
V			34								"				-12 mA					D		"	"
	IL	3009	35								"				5.5 V	5.5 V	5.5 V	0.4 V	5.5 V	A	-0.7	-1.6	mA
		"	36								"				"	5.5 V	0.4 V	5.5 V	"	B	"	"	"
		"	37								"				"	0.4 V	5.5 V	"	"	C	"	"	"
I		"	38								"				0.4 V	5.5 V	5.5 V	"	"	D	"	"	"
	IH1	3010	39								"				GND	GND	GND	2.4 V	"	A		40	µA
		"	40								"				"	GND	2.4 V	GND	"	B		"	"
		"	41								"				"	2.4 V	GND	"	"	C		"	"
I		"	42								"				2.4 V	GND	"	"	"	D		"	"
	IH2	3010	43								"				GND	"	"	5.5 V	"	A		100	µA
		"	44								"				"	"	5.5 V	GND	"	B		"	"
		"	45								"				"	5.5 V	GND	"	"	C		"	"
I		"	46								"				5.5 V	GND	GND	"	"	D		"	"
	CC	3005	47								"				GND	GND	GND	GND	"	V_{CC}		62	mA
2	Same tests, terminal conditions, and limits as subgroup 1, except T_C = +125°C and V_{IC} tests are omitted.																						
3	Same tests, terminal conditions, and limits as subgroup 1, except T_C = -55°C and V_{IC} tests are omitted.																						

I

See footnotes at end of device types 04 and 05.

TABLE III. Group A inspection for device type 04 and 05.
Terminal conditions (pins not designated may be high ≥ 2.4 V or low ≤ 0.8 V; or open).

Subgroup	Symbol	MIL-STD-883 method	Cases E, F	1	2	3	4	5	6	7	8	9	10	11	12	13	14	15	16	Measured terminal	Limits		Unit
			Test no.	0	1	2	3	4	5	6	GND	7	8	9	D	C	B	A	V_{CC}		Min	Max	
7 Tc = 25°C	Truth table test		48	L	H	H	H	H	H	H	GND	H	H	H	GND	GND	GND	GND	5.0 V				
			49	H	L	H	"	"	"	"	"	"	"	"	"	"	GND	5.0 V	"				
			50	"	H	L	"	"	"	"	"	"	"	"	"	"	5.0 V	GND	"				
			51	"	"	H	L	"	"	"	"	"	"	"	"	"	5.0 V	5.0 V	"				
			52	"	"	"	H	L	"	"	"	"	"	"	"	5.0 V	GND	GND	"				
			53	"	"	"	"	H	L	"	"	"	"	"	"	"	GND	5.0 V	"				
			54	"	"	"	"	"	H	L	"	"	"	"	"	"	5.0 V	GND	"				
			55	"	"	"	"	"	"	H	"	L	"	"	"	"	5.0 V	5.0 V	"		2/		
			56	"	"	"	"	"	"	"	"	H	L	"	5.0 V	GND	GND	GND	"				
			57	"	"	"	"	"	"	"	"	"	H	L	"	"	GND	5.0 V	"				
			58	"	"	"	"	"	"	"	"	"	"	H	"	"	5.0 V	GND	"				
			59	"	"	"	"	"	"	"	"	"	"	"	"	"	5.0 V	5.0 V	"				
			60	"	"	"	"	"	"	"	"	"	"	"	"	5.0 V	GND	GND	"				
			61	"	"	"	"	"	"	"	"	"	"	"	"	"	GND	5.0 V	"				
			62	"	"	"	"	"	"	"	"	"	"	"	"	"	5.0 V	GND	"				
			63	"	"	"	"	"	"	"	"	"	"	"	"	"	5.0 V	5.0 V	"				
8	Truth table test		64 thru 79	Same tests as subgroup 7, except T_C = +125°C.															"				
			80 thru 95	Same tests as subgroup 7, except T_C = -55°C.															"				
9 Tc = 25°C	t_{PHL} t_{PLH}	3003 (Fig. 5)	96 & 97	OUT							GND				GND	GND	GND	IN	5.0 V	A to 0	5	56	ns
			98 & 99		OUT						"				GND	GND	"	"	"	A to 1	"	"	"
			100 & 101						OUT		"				GND	5.0 V	"	"	"	A to 5	"	"	"
			102 & 103								"		OUT		5.0 V	GND	"	"	"	A to 8	"	"	"
			104 & 105		OUT						"				GND	GND	IN	5.0 V	"	B to 1	"	"	"
			106 & 107			OUT					"				"	GND	IN	GND	"	B to 2	"	"	"
			108 & 109							OUT	"				"	5.0 V	IN	GND	"	B to 6	"	"	"
			110 & 111			OUT					"				"	IN	5.0 V	GND	"	C to 2	"	"	"
			112 & 113				OUT				"				"	"	5.0 V	5.0 V	"	C to 3	"	"	"
			114 & 115					OUT			"				"	"	GND	GND	"	C to 4	"	"	"
			116 & 117						OUT		"				"	"	GND	5.0 V	"	C to 5	"	"	"
			118 & 119							OUT	"				"	"	5.0 V	GND	"	C to 6	"	"	"
			120 & 121								"	OUT			"	"	5.0 V	5.0 V	"	C to 7	"	"	"
			122 & 123								"		OUT		5.0 V	"	GND	GND	"	C to 8	"	"	"
			124 & 125								"			OUT	5.0 V	"	GND	5.0 V	"	C to 9	"	"	"
			126 & 127				OUT				"				IN	GND	5.0 V	5.0 V	"	D to 3	"	"	"
			128 & 129					OUT			"				"	5.0 V	GND	GND	"	D to 4	"	"	"
			130 & 131						OUT		"				"	"	GND	5.0 V	"	D to 5	"	"	"
			132 & 133							OUT	"				"	"	5.0 V	GND	"	D to 6	"	"	"
			134 & 135								"	OUT			"	"	5.0 V	5.0 V	"	D to 7	"	"	"
			136 &137								"		OUT		"	GND	GND	GND	"	D to 8	"	"	"
			138 & 139								"			OUT	"	GND	GND	5.0 V	"	D to 9	"	"	"

See notes at end of device types 04 and 05.

TABLE III. Group A inspection for device type 04 and 05.
Terminal conditions (pins not designated may be high ≥ 2.4 V or low ≤ 0.8 V; or open).

Subgroup	Symbol	MIL-STD-883 method	Cases E, F Test no.	1 0	2 1	3 2	4 3	5 4	6 5	7 6	8 GND	9 7	10 8	11 9	12 D	13 C	14 B	15 A	16 V_{CC}	Measured terminal	Limits Min	Limits Max	Unit
10	t_{PHL}	3003	140 & 141	OUT							GND				GND	GND	GND	IN	5.0 V	A to 0	5	73	ns
Tc = 125°C	t_{PLH}	(Fig. 5)	142 & 143		OUT						"				GND	GND	"	"	"	A to 1	"	"	"
		"	144 & 145						OUT		"				GND	5.0 V	"	"	"	A to 5	"	"	"
		"	146 & 147								"		OUT		5.0 V	GND	"	"	"	A to 8	"	"	"
		"	148 & 149		OUT						"				GND	GND	IN	5.0 V	"	B to 1	"	"	"
		"	150 & 151			OUT					"				"	GND	IN	GND	"	B to 2	"	"	"
		"	152 & 153							OUT	"				"	5.0 V	IN	GND	"	B to 6	"	"	"
		"	154 & 155			OUT					"				"	IN	5.0 V	GND	"	C to 2	"	"	"
		"	156 & 157				OUT				"				"	"	5.0 V	5.0 V	"	C to 3	"	"	"
		"	158 & 159					OUT			"				"	"	GND	GND	"	C to 4	"	"	"
		"	160 & 161						OUT		"				"	"	GND	5.0 V	"	C to 5	"	"	"
		"	162 & 163							OUT	"				"	"	5.0 V	GND	"	C to 6	"	"	"
		"	164 & 165								"	OUT			"	"	5.0 V	5.0 V	"	C to 7	"	"	"
		"	166 & 167								"		OUT		5.0 V	"	GND	GND	"	C to 8	"	"	"
		"	168 & 169								"			OUT	5.0 V	"	GND	5.0 V	"	C to 9	"	"	"
		"	170 & 171				OUT				"				IN	GND	5.0 V	5.0 V	"	D to 3	"	"	"
		"	172 & 173					OUT			"				"	5.0 V	GND	GND	"	D to 4	"	"	"
		"	174 & 175						OUT		"				"	"	GND	5.0 V	"	D to 5	"	"	"
		"	176 & 177							OUT	"				"	"	5.0 V	GND	"	D to 6	"	"	"
		"	178 & 179								"	OUT			"	"	5.0 V	5.0 V	"	D to 7	"	"	"
		"	180 & 181								"		OUT		"	GND	GND	GND	"	D to 8	"	"	"
		"	182 & 183								"			OUT	"	GND	GND	5.0 V	"	D to 9	"	"	"
11	Same tests, terminal conditions, and limits as subgroup 10, except T_C = -55°C.																						

1/ Y = 30 volts for device type 04 and 15 volts for device type 05.
2/ Output voltages shall be either:
(a) H = 2.4 V minimum and L = 0.4 V maximum when using a high speed checker double comparator, or
(b) H ≥ 1.5 V and L ≤ 1.5 V when using a high speed checker single comparator.

TABLE III. Group A inspection for device type 06 and 07.
Terminal conditions (pins not designated may be high ≥ 2.4 V or low ≤ 0.8 V; or open).

Subgroup	Symbol	MIL-STD-883 method	Cases E, F Test no.	1 IN B	2 IN C	3 LT	4 RBO	5 RBI	6 IN D	7 IN A	8 GND	9 OUT E	10 OUT D	11 OUT C	12 OUT B	13 OUT A	14 OUT G	15 OUT F	16 V_{CC}	Measured terminal	Limits Min	Limits Max	Unit
1 Tc = 25°C	V_{OL1} 1/	3007	1	X		0.8 V		X			GND	40 mA							4.5 V	OUT E		0.4	V
	"	"	2	"	"	"		"	"	"	"		40 mA						"	OUT D		"	"
	"	"	3	"	"	"		"	"	"	"			40 mA					"	OUT C		"	"
	"	"	4	"	"	"		"	"	"	"				40 mA				"	OUT B		"	"
	"	"	5	X	"	"		X	X	"	"					40 mA			"	OUT A		"	"
	"	"	6	"	"	"		"	"	"	"						40 mA		"	OUT G		"	"
	"	"	7	"	"	"		"	"	"	"							40 mA	"	OUT F		"	"
	OL2	"	8	0.8 V	0.8 V	2.0 V	8 mA	0.8 V	0.8 V	0.8 V	"								"	RBO		0.4	"
	CEX 1/		9	"	"	"		"	"	"	"	Y							"	OUT E		250	μA
			10	"	"	"			"	"	"		Y						"	OUT D		"	"
V			11	"	"	"			"	"	"			Y						OUT C		"	"
I			12	"	"	"			"	"	"				Y					OUT B		"	"
2			13	"	"	"			"	"	"					Y				OUT A		"	"
			14	"	"	"	"		"	"	"						Y		"	OUT G		"	"
			15	"	"	"	"		"	"	"							Y	"	OUT F		"	"
	OH	3006	16	0.8 V	0.8 V	2.0 V	-.2 mA	2.0 V	0.8 V	0.8 V	"							"	"	RBO	2.4		V
	I C		17	-12 mA			"				"							"		IN B		-1.5	"
			18		-12 mA		"				"									IN C		"	"
V			19				-12 mA				"									RBO		"	"
V			20					-12 mA			"									RBI		"	"
			21						-12 mA		"							"		IN D		"	"
			22							-12 mA	"							"		IN A		"	"
	IL1	3009	23 4/	0.4 V	5.5 V	5.5 V		5.5 V	5.5 V	5.5 V	"							"	5.5 V	IN B	-0.7	-1.6	mA
		"	23 CKT C	0.4 V	5.5 V	5.5 V		"	"	"	"							"	"	IN B	-0.4	-1.3	"
		"	24 4/	5.5 V	0.4 V	5.5 V		"	"	"	"							"	"	IN C	-0.7	-1.6	"
I		"	24 CKT C	5.5 V	0.4 V	5.5 V		"	"	"	"							"	"	IN C	-0.4	-1.3	"
		"	25 4/	"	5.5 V	0.4 V		"	"	"	"								"	LT	-0.7	-1.6	"
		"	25 CKT C	"	5.5 V	0.4 V		"	"	"	"								"	LT	-0.4	-1.3	"
		"	26 4/	"	"	5.5 V		0.4 V	"	"	"								"	RBI	-0.7	-1.6	"
		"	26 CKT C	"	"	5.5 V		0.4 V	"	"	"								"	RBI	-0.4	-1.3	"
		"	27 4/	"	"	"		5.5 V	0.4 V	"	"								"	IN D	-0.7	-1.6	"
			27 CKT C	"	"	"		"	0.4 V	"	"								"	IN D	-0.4	-1.3	"
		"	28 4/	"	"	"		"	5.5 V	0.4 V	"								"	IN A	-0.7	-1.6	"
			28 CKT C	"	"	"		"	5.5 V	0.4 V	"								"	IN A	-0.4	-1.3	"
	IL2	3009	29	"	"	"	0.4 V	5.5 V	5.5 V	5.5 V	"								5.5 V	RBO	-1.7	-4.2	mA
	IH1	3010	30	2.4 V	GND	GND		GND	GND	GND	"								"	IN B		40	μA
	"	"	31	GND	2.4 V	GND		GND	"	"	"								"	IN C		"	"
I		"	32	"	GND	2.4 V		GND		"	"								"	LT		"	"
I		"	33	"	"	GND		2.4 V	"	"	"								"	RBI		"	"
		"	34	"	"	GND		GND	2.4 V	"	"								"	IN D		"	"
		"	35	"	"	GND		GND"	GND	2.4 V	"								"	IN A		"	"
	IH2	3010	36	5.5 V	GND	GND		GND	GND	GND	"								"	IN B		100	μA
		"	37	GND	5.5 V	GND		GND	"	"	"								"	IN C		"	"
		"	38	"	GND	5.5 V		GND		"	"								"	LT		"	"
I		"	39	"	"	GND		5.5 V	"	"	"								"	RBI		"	"
		"	40	"	"	"		GND	5.5 V	"	"								"	IN D		"	"
		"	41	"	"	"		GND"	GND	5.5 V	"								"	IN A		"	"
	OS	3011	42	"	"	"	GND	GND	GND	GND	"								"	RBO		-4	mA
	CC	3005	43	5.5 V	5.5 V	5.5 V	5.5 V	5.5 V	5.5 V	5.5 V	"								"	V_{CC}		85	mA
2	Same tests, terminal conditions, and limits as subgroup 1, except T_C = +125°C and V_{IC} tests are omitted.																						
3	Same tests, terminal conditions, and limits as subgroup 1, except T_C = -55°C and V_{IC} tests are omitted.																						

See footnotes at end of device types 06 and 07.

TABLE III. Group A inspection for device type 06 and 07.
Terminal conditions (pins not designated may be high ≥ 2.4 V or low ≤ 0.8 V; or open).

Subgroup	Symbol	MIL-STD-883 method	Cases E, F Test no.	1 IN B	2 IN C	3 LT	4 RBO	5 RBI	6 IN D	7 IN A	8 GND	9 OUT E	10 OUT D	11 OUT C	12 OUT B	13 OUT A	14 OUT G	15 OUT F	16 V_{CC}	Measured terminal	Limits Min	Limits Max	Unit
7 Tc = 25°C	Truth table test		44	GND	GND	5.0 V		5.0 V	GND	GND	GND	L	L	L	L	L	H	L	5.0 V				
			45	GND	"	"		X	"	5.0 V	"	H	H	L	"	H	H	H	"				
			46	5.0 V	"	"		"	"	GND	"	L	L	H	"	L	L	H	"				
			47	5.0 V	"	"		"	"	5.0 V	"	H	L	L	"	L	"	H	"				
			48	GND	5.0 V	"		"	"	GND	"	H	H	"	"	H	"	L	"		3/		
			49	GND	"	"		"	"	5.0 V	"	H	L	"	H	L	"	L	"				
			50	5.0 V	"	"		"	"	GND	"	L	L	"	H	H	"	L	"				
			51	5.0 V	"	"		"	"	5.0 V	"	H	H	"	L	L	H	H	"				
			52	GND	GND	"		"	5.0 V	GND	"	L	L	"	L	L	L	L	"				
			53	GND	"	"		"	"	5.0 V	"	H	H	"	L	L	"	L	"				
			54	5.0 V	"	"		"	"	GND	"	L	L	H	H	H	"	H	"				
			55	5.0 V	"	"		"	"	5.0 V	"	H	L	L	H	H	"	H	"				
			56	GND	5.0 V	"			"	GND	"	H	H	H	L	H	"	L	"				
			57	GND	"	"		"	"	5.0 V	"	H	L	"	H	L	"	L	"				
			58	5.0 V	"	"		"	"	GND	"	L	L	"	"	H	"	L	"				
			59	5.0 V	"	"		"	"	5.0 V	"	H	H	"	"	"	H	H	"				
			60	X	X	X	GND	X	X	X	"	H	H	"	"	"	H	H	"				
			61	GND	GND	5.0 V	L	GND	GND	GND	"	H	H	"	"	"	H	H	"				
			62	X	X	GND		X	X	X	"	L	L	L	L	L	L	L	"				
8	Truth table test		63 - 81	Same tests as subgroup 7, except T_C = 125°C.																			
			82 -100	Same tests as subgroup 7, except T_C = -55°C.																			
9 Tc = 25°C	t_{PHL} t_{PLH}	3003 (Fig. 6)	101 & 102	GND	GND	5.0 V		5.0 V	GND	IN	GND					OUT			5.0 V	IN A to A	8	104	ns
			103 & 104	GND	5.0 V	"		"	5.0 V	"	"					OUT			"	IN A to A	"	"	"
		"	105 & 106	5.0 V	"	"		"	GND	"	"					OUT			"	IN A to A	"	"	"
		"	107 & 108	GND	"	"		"	"	"	"				OUT				"	IN A to B	"	"	"
		"	109 & 110	5.0 V	"	"		"	"	"	"				OUT				"	IN A to B	"	"	"
		"	111 & 112	5.0 V	GND	"		"	"	"	"			OUT					"	IN A to C	"	"	"
		"	113 & 114	GND	GND	"		"	"	"	"		OUT						"	IN A to D	"	"	"
		"	115 & 116	GND	5.0 V	"		"	"	"	"		OUT						"	IN A to D	"	"	"
		"	117 & 118	5.0 V	5.0 V	"		"	"	"	"		OUT						"	IN A to D	"	"	"
		"	119 & 120	GND	GND	"		"	"	"	"	OUT							"	IN A to E	"	"	"
		"	121 & 122	5.0 V	GND	"		"	"	"	"	OUT							"	IN A to E	"	"	"
		"	123 & 124	GND	GND	"		"	"	"	"							OUT	"	IN A to F	"	"	"
		"	125 & 126	5.0 V	5.0 V	"		"	5.0 V	"	"							OUT	"	IN A to F	"	"	"
		"	127 & 128	5.0 V	5.0 V	"		"	5.0 V	"	"						OUT		"	IN A to G	"	"	"
		"	129 & 130	GND	GND	"	OUT	GND	GND	"	"								"	IN A to RBO	"	"	"
		"	131 & 132	IN	GND	"		5.0 V	5.0 V	GND	"					OUT			"	IN B to A	"	"	"
		"	133 & 134	"	GND	"		"	GND	5.0 V	"					OUT			"	IN B to A	"	"	"
		"	135 & 136	"	5.0 V	"		"	GND	GND	"				OUT				"	IN B to B	"	"	"
		"	137 & 138	"	GND	"		"	5.0 V	GND	"				OUT				"	IN B to B	"	"	"
		"	139 & 140	"	5.0 V	"		"	GND	5.0 V	"				OUT				"	IN B to B	"	"	"
		"	141 & 142	"	GND	"		"	5.0 V	5.0 V	"				OUT				"	IN B to B	"	"	"
		"	143 & 144	"	GND	"		"	GND	GND	"			OUT					"	IN B to C	"	"	"
		"	145 & 146	"	GND	"		"	"	5.0 V	"		OUT						"	IN B to D	"	"	"
		"	147 & 148	"	5.0 V	"		"	"	GND	"		OUT						"	IN B to D	"	"	"
		"	149 & 150	"	5.0 V	"		"	"	GND	"	OUT							"	IN B to E	"	"	"
		"	151 & 152	"	5.0 V	"		"	"	5.0 V	"							OUT	"	IN B to F	"	"	"
		"	153 & 154	"	GND	"		"	"	GND	"							OUT	"	IN B to F	"	"	"
		"	155 & 156	"	GND	"		"	5.0 V	"	"							OUT	"	IN B to F	"	"	"
		"	157 & 158	"	GND	"		"	GND	"	"						OUT		"	IN B to G	"	"	"
		"	159 & 160	GND	IN	"		"	5.0 V	"	"					OUT			"	IN C to A	"	"	"
		"	161 & 162	5.0 V	"	"		"	GND	"	"			OUT					"	IN C to C	"	"	"
		"	163 & 164	GND	"	"		"	5.0 V	5.0 V	"			OUT					"	IN C to C	"	"	"
		"	165 & 166	GND	"	"		"	GND	GND	"		OUT						"	IN C to D	"	"	"
		"	167 & 168	GND	"	"		"	GND	GND	"	OUT							"	IN C to E	"	"	"
		"	169 & 170	5.0 V	"	"		"	5.0 V	GND	"							OUT	"	IN C to F	"	"	"

See footnotes at end of device types 06 and 07.

TABLE III. Group A inspection for device type 06 and 07.
Terminal conditions (pins not designated may be high ≥ 2.4 V or low ≤ 0.8 V; or open).

Subgroup	Symbol	MIL-STD-883 method	Cases E, F Test no.	1 IN B	2 IN C	3 LT	4 RBO	5 RBI	6 IN D	7 IN A	8 GND	9 OUT E	10 OUT D	11 OUT C	12 OUT B	13 OUT A	14 OUT G	15 OUT F	16 V_{CC}	Measured terminal	Limits Min	Limits Max	Unit
9	t_{PHL}	3003	171 & 172	GND	IN	5.0 V		5.0 V	GND	5.0 V	GND							OUT	5.0 V	IN C to F	8	104	ns
Tc = 25°C	t_{PLH}	(Fig. 6)	173 & 174	5.0 V	5.0 V	"		"	IN	5.0 V	"					OUT			"	IN D to A	"	"	"
		"	175 & 176	GND	5.0 V	"		"	IN	GND	"			OUT					"	IN D to C	"	"	"
		"	177 & 178	"	GND	"		"	IN	"	"						OUT		"	IN D to G	"	"	"
		"	179 & 180	"	"	IN		GND	GND	"	"					OUT			"	LT to A	"	"	"
		"	181 & 182	"	"	IN	OUT	GND	"	"	"								"	LT to RBO	"	"	"
		"	183 & 184	"	"	5.0 V	IN	5.0 V	"	"	"					OUT			"	RBO to A	"	"	"
		"	185 & 186	"	"	"		IN	"	"	"					OUT			"	RBI to A	"	"	"
		"	187 & 188	"	"	"	OUT	IN	"	"	"								"	RBI to RBO	"	"	"
10	t_{PHL}	3003	189 & 190	"	"	"		5.0 V	"	IN	"					OUT			"	IN A to A	8	144	"
Tc = 125°C	t_{PLH}	(Fig. 6)	191 & 192	"	5.0 V	"		"	5.0 V	"	"					OUT			"	IN A to A	"	"	"
		"	193 & 194	5.0 V	"	"		"	GND	"	"					OUT			"	IN A to A	"	"	"
		"	195 & 196	GND	"	"		"	"	"	"				OUT				"	IN A to B	"	"	"
		"	197 & 198	5.0 V	"	"		"	"	"	"				OUT				"	IN A to B	"	"	"
		"	199 & 200	5.0 V	GND	"		"	"	"	"			OUT					"	IN A to C	"	"	"
		"	201 & 202	GND	GND	"		"	"	"	"		OUT						"	IN A to D	"	"	"
		"	203 & 204	GND	5.0 V	"		"	"	"	"		OUT						"	IN A to D	"	"	"
		"	205 & 206	5.0 V	5.0 V	"		"	"	"	"		OUT						"	IN A to D	"	"	"
		"	207 & 208	GND	GND	"		"	"	"	"	OUT							"	IN A to E	"	"	"
		"	209 & 210	5.0 V	GND	"		"	"	"	"	OUT							"	IN A to E	"	"	"
		"	211 & 212	GND	GND	"		"	"	"	"							OUT	"	IN A to F	"	"	"
		"	213 & 214	5.0 V	5.0 V	"		"	5.0 V	"	"							OUT	"	IN A to F	"	"	"
		"	215 & 216	5.0 V	5.0 V	"		"	5.0 V	"	"						OUT		"	IN A to G	"	"	"
		"	217 & 218	GND	GND	"	OUT	GND	GND	"	"								"	IN A to RBO	"	"	"
		"	219 & 220	IN	GND	"		5.0 V	5.0 V	GND	"					OUT			"	IN B to A	"	"	"
		"	221 & 222	"	GND	"		"	GND	5.0 V	"					OUT			"	IN B to A	"	"	"
		"	223 & 224	"	5.0 V	"		"	GND	GND	"				OUT				"	IN B to B	"	"	"
		"	225 & 226	"	GND	"		"	5.0 V	GND	"				OUT				"	IN B to B	"	"	"
		"	227 & 228	"	5.0 V	"		"	GND	5.0 V	"				OUT				"	IN B to B	"	"	"
		"	229 & 230	"	GND	"		"	5.0 V	5.0 V	"				OUT				"	IN B to B	"	"	"
		"	231 & 232	"	GND	"		"	GND	GND	"			OUT					"	IN B to C	"	"	"
		"	233 & 234	"	GND	"		"	"	5.0 V	"		OUT						"	IN B to D	"	"	"
		"	235 & 236	"	5.0 V	"		"	"	GND	"		OUT						"	IN B to D	"	"	"
		"	237 & 238	"	5.0 V	"		"	"	GND	"	OUT							"	IN B to E	"	"	"
		"	239 & 240	"	5.0 V	"		"	"	5.0 V	"							OUT	"	IN B to F	"	"	"
		"	241 & 242	"	GND	"		"	"	GND	"							OUT	"	IN B to F	"	"	"
		"	243 & 244	"	GND	"		"	5.0 V	"	"							OUT	"	IN B to F	"	"	"
		"	245 & 246	"	GND	"		"	GND	"	"						OUT		"	IN B to G	"	"	"
		"	247 & 248	GND	IN	"		"	5.0 V	"	"					OUT			"	IN C to A	"	"	"
		"	249 & 250	5.0 V	"	"		"	GND	"	"			OUT					"	IN C to C	"	"	"
		"	251 & 252	GND	"	"		"	5.0 V	5.0 V	"			OUT					"	IN C to C	"	"	"
		"	253 & 254	GND	"	"		"	GND	GND	"		OUT						"	IN C to D	"	"	"
		"	255 & 256	GND	"	"		"	GND	GND	"	OUT							"	IN C to E	"	"	"
		"	257 & 258	5.0 V	"	"		"	5.0 V	GND	"							OUT	"	IN C to F	"	"	"
		"	259 & 260	GND	5.0 V	"		"	GND	5.0 V	"							OUT	"	IN C to F	"	"	"
		"	261 & 262	5.0 V	5.0 V	"		"	IN	5.0 V	"					OUT			"	IN D to A	"	"	"
		"	263 & 264	GND	5.0 V	"		"	IN	GND	"			OUT					"	IN D to C	"	"	"
		"	265 & 266	"	GND	"		"	IN	"	"						OUT		"	IN D to G	"	"	"
		"	267 & 268	"	"	IN		GND	GND	"	"					OUT			"	LT to A	"	"	"
		"	269 & 270	"	"	IN	OUT	GND	"	"	"								"	LT to RBO	"	"	"
		"	271 & 272	"	"	5.0 V	IN	5.0 V	"	"	"					OUT			"	RBO to A	"	"	"
		"	273 & 274	"	"	"		IN	"	"	"					OUT			"	RBI to A	"	"	"
		"	275 & 276	"	"	"	OUT	IN	"	"	"								"	RBI to RBO	"	"	"
11	Same tests, terminal conditions, and limits as subgroup 10 except T_C = -55°C.																						

1/ X = Input may be high level or low level.
2/ Y = 30 volts for device type 05 and 15 volts for device type 07.
3/ Output voltages shall be either:
(a) H = 2.4 volts minimum and L = 0.4 volts minimum when using high speed checker double comparator, or
(b) H ≥ 1.5 volts and L ≤ 1.5 volts when using a high speed checker single comparator.
4/ CKT except C.

TABLE III. Group A inspection for device type 08.
Terminal conditions (pins not designated may be high ≥ 2.4 V or low ≤ 0.8 V; or open).

Subgroup	Symbol	MIL-STD-883 method	Cases E, F Test no.	1 IN B	2 IN C	3 LT	4 RBO	5 RBI	6 IN D	7 IN A	8 GND	9 OUT E	10 OUT D	11 OUT C	12 OUT B	13 OUT A	14 OUT G	15 OUT F	16 V_{CC}	Measured terminal	Limits Min	Limits Max	Unit
1	V_{OH1}	3006	1	X	X	0.8 V		X	X	X	GND	-0.4 mA							4.5 V	OUT E	2.4 V		V
Tc = 25°C	1/	"	2	"	"	"		"	"	"	"		-0.4 mA						"	OUT D	"		"
		"	3	"	"	"		"	"	"	"			-0.4 mA					"	OUT C	"		"
		"	4	"	"	"		"	"	"	"				-0.4 mA				"	OUT B	"		"
		"	5	"	"	"		"	"	"	"					-0.4 mA			"	OUT A	"		"
		"	6	"	"	"		"	"	"	"						-0.4 mA		"	OUT G	"		"
		"	7	"	"	"		"	"	"	"							-0.4 mA	"	OUT F	"		"
	$_{OH2}$	"	8	0.8 V	0.8 V	2.0 V	-.2 mA	0.8 V	0.8 V	0.8 V	"								"	RBO	"		"
	$_{OL1}$	3007	9	"	"	"		"	"	"	"	6.4 mA							"	OUT E		0.4	"
		"	10	"	"	"			"	"	"		6.4 mA						"	OUT D		"	"
V		"	11	"	"	"			"	"	"			6.4 mA					"	OUT C		"	"
V		"	12	"	"	"			"	"	"				6.4 mA				"	OUT B		"	"
		"	13	"	"	"			"	"	"					6.4 mA			"	OUT A		"	"
		"	14	"	"	"	"		"	"	"						6.4 mA		"	OUT G		"	"
		"	15	"	"	"	"		"	"	"							6.4 mA	"	OUT F		"	"
	$_{OL2}$	3007	16	0.8 V	0.8 V	2.0 V	8 mA	0.8 V	0.8 V	0.8 V	"								"	RBO		0.4	"
	$_{I\ C}$		17	-12 mA			"				"									IN B		-1.5	"
			18		-12 mA		"				"									IN C		"	"
V			19				-12 mA				"									RBO		"	"
V			20					-12 mA			"									RBI		"	"
			21						-12 mA		"							"		IN D		"	"
			22							-12 mA	"							"		IN A		"	"
	$_{IL1}$	3009	23 2/	0.4 V	5.5 V	5.5 V		5.5 V	5.5 V	5.5 V	"							"	5.5 V	IN B	-0.7	-1.6	mA
		"	23 CKT B	0.4 V	5.5 V	5.5 V		"	"	"	"							"	"	IN B	-0.4	-1.3	"
		"	24 2/	5.5 V	0.4 V	5.5 V		"	"	"	"							"	"	IN C	-0.7	-1.6	"
I		"	24 CKT B	"	0.4 V	5.5 V		"	"	"	"							"	"	IN C	-0.4	-1.3	"
		"	25 2/	"	5.5 V	0.4 V		"	"	"	"								"	LT	-0.7	-1.6	"
		"	25 CKT B	"	"	0.4 V		"	"	"	"								"	LT	-0.4	-1.3	"
		"	26 2/	"	"	5.5 V		0.4 V	"	"	"								"	RBI	-0.7	-1.6	"
		"	26 CKT B	"	"	"		0.4 V	"	"	"								"	RBI	-0.4	-1.3	"
		"	27 2/	"	"	"		5.5 V	0.4 V	"	"								"	IN D	-0.7	-1.6	V
			27 CKT B	"	"	"		"	0.4 V	"	"								"	IN D	-0.4	-1.3	"
		"	28 2/	"	"	"		"	5.5 V	0.4 V	"								"	IN A	-0.7	-1.6	"
			28 CKT B	"	"	"		"	5.5 V	0.4 V	"								"	IN A	-0.4	-1.3	"
	$_{IL2}$	3009	29	"	"	"	0.4 V	5.5 V	5.5 V	5.5 V	"								"	RBO	-1.7	-4.2	mA
	$_{IH1}$	3010	30	2.4 V	GND	GND		GND	GND	GND	"								"	IN B		40	µA
	"	"	31	GND	2.4 V	GND		GND	"	"	"								"	IN C		"	"
I		"	32	"	GND	2.4 V		GND		"	"								"	LT		"	"
I		"	33	"	"	GND		2.4 V	"	"	"								"	RBI		"	"
		"	34	"	"	GND		GND	2.4 V	"	"								"	IN D		"	"
		"	35	"	"	GND		GND"	GND	2.4 V	"								"	IN A		"	"
	$_{IH2}$	3010	36	5.5 V	GND	GND		GND	GND	GND	"								"	IN B		100	µA
		"	37	GND	5.5 V	GND		GND	"	"	"								"	IN C		"	"
		"	38	"	GND	5.5 V		GND		"	"								"	LT		"	"
I		"	39	"	"	GND		5.5 V	"	"	"								"	RBI		"	"
		"	40	"	"	"		GND	5.5 V	"	"								"	IN D		"	"
		"	41	"	"	"		GND"	GND	5.5 V	"								"	IN A		"	"
	$_{OS}$	3011	42	X	X	GND		X	X	X	"					GND			"	OUT A		-4	mA
		"	43	"	"	"			"	"	"				GND				"	OUT B		"	"
		"	44	"	"	"			"	"	"			GND					"	OUT C		"	"
I		"	45	"	"	"			"	"	"		GND						"	OUT D		"	"
		"	46	"	"	"			"	"	"	GND							"	OUT E		"	"
		"	47	"	"	"	"		"	"	"							GND	"	OUT F		"	"
		"	48	"	"	"	"		"	"	"						GND		"	OUT G		"	"
		"	49	"	"	"	GND	"	"	"	"								"	RBO		"	"
	$_{CC}$	3005	50	"	"	"	"	"	"	"	"								"	V_{CC}		76	mA
2	Same tests, terminal conditions, and limits as subgroup 1, except T_C = +125°C and $V_{I\ C}$ tests are omitted.																						
3	Same tests, terminal conditions, and limits as subgroup 1, except T_C = -55°C and $V_{I\ C}$ tests are omitted.																						

I

See footnotes at end of device types 08.

TABLE III. Group A inspection for device type 08.
Terminal conditions (pins not designated may be high ≥ 2.4 V or low ≤ 0.8 V; or open).

Subgroup	Symbol	MIL-STD-883 method	Cases E, F Test no.	1 IN B	2 IN C	3 LT	4 RBO	5 RBI	6 IN D	7 IN A	8 GND	9 OUT E	10 OUT D	11 OUT C	12 OUT B	13 OUT A	14 OUT G	15 OUT F	16 V_{CC}	Measured terminal	Limits Min	Limits Max	Unit
7 Tc = 25°C	Truth table test		51	GND	GND	5.0 V		5.0 V	GND	GND	GND	H	H	H	H	H	L	H	5.0 V				
			52	GND	"	"		X	"	5.0 V	"	L	L	H	"	L	L	L	"				
			53	5.0 V	"	"		"	"	GND	"	H	H	L	"	H	H	"	"				
			54	5.0 V	"	"		"	"	5.0 V	"	L	H	H	"	H	"	"	"				
			55	GND	5.0 V	"		"	"	GND	"	"	L	"	"	L	"	H	"		3/		
			56	GND	"	"		"	"	5.0 V	"	"	H	"	L	H	"	"	"				
			57	5.0 V	"	"		"	"	GND	"	H	H	"	L	L	"	"	"				
			58	5.0 V	"	"		"	"	5.0 V	"	L	L	"	H	H	L	L	"				
			59	GND	GND	"			5.0 V	GND	"	H	H	"	"	"	H	H	"				
			60	GND	"	"		"	"	5.0 V	"	L	L	"	"	"	"	H	"				
			61	5.0 V	"	"		"	"	GND	"	H	H	L	L	L	"	L	"				
			62	5.0 V	"	"		"	"	5.0 V	"	L	H	H	L	"	"	L	"				
			63	GND	5.0 V	"	"	"	"	GND	"	"	L	L	H	"	"	H	"				
			64	GND	"	"		"	"	5.0 V	"	"	H	"	L	H	"	"	"				
			65	5.0 V	"	"		"	"	GND	"	H	H	"	"	L	"	"	"				
			66	5.0 V	"	"		"	"	5.0 V	"	L	L	"	"	"	L	L	"				
			67	X	X	X	GND	X	X	X	"	"	"	"	"	"	"	"	"				
			68	GND	GND	5.0 V	L	GND	GND	GND	"	"	"	"	"	"	"	"	"				
			69	X	X	GND		X	X	X	"	H	H	H	H	H	H	H	"				
8	Truth table test		70 - 89	Same tests as subgroup 7, except T_C = 125°C.																			
			90 -109	Same tests as subgroup 7, except T_C = -55°C.																			
9 Tc = 25°C	t_{PHL} t_{PLH}	3003 (Fig. 7)	110 & 111	GND	GND	5.0 V		5.0 V	GND	IN	GND					OUT			5.0 V	IN A to A	8	104	ns
			112 & 113	"	"	"		"	"	"	"		OUT						"	IN A to D	"	"	"
		"	114 & 115	"	"	"		"	"	"	"	OUT							"	IN A to E	"	"	"
		"	116 & 117	"	"	"		"	"	"	"							OUT	"	IN A to F	"	"	"
		"	118 & 119	5.0 V	5.0 V	"		"	"	"	"					OUT			"	IN A to A	"	"	"
		"	120 & 121	GND	5.0 V	"		"	"	"	"				OUT				"	IN A to B	"	"	"
		"	122 & 123	5.0 V	5.0 V	"		"	"	"	"		OUT						"	IN A to D	"	"	"
		"	124 & 125	GND	GND	"	OUT	GND	"	"	"								"	IN A to RBO	"	"	"
		"	126 & 127	IN	"	"		5.0 V	"	GND	"			OUT					"	IN B to C	"	"	"
		"	128 & 129	"	"	"		"	"	"	"							OUT	"	IN B to F	"	"	"
		"	130 & 131	"	"	"		"	"	"	"						OUT		"	IN B to G	"	"	"
		"	132 & 133	"	"	"		"	5.0 V	"	"					OUT			"	IN B to A	"	"	"
		"	134 & 135	"	5.0 V	"		"	GND	5.0 V	"							OUT	"	IN B to F	"	"	"
		"	136 & 137	"	5.0 V	"		"	"	5.0 V	"						OUT		"	IN B to G	"	"	"
		"	138 & 139	"	5.0 V	"		"	"	GND	"	OUT							"	IN B to E	"	"	"
		"	140 & 141	"	IN	"		"	"	"	"		OUT						"	IN C to D	"	"	"
		"	142 & 143	5.0 V	IN	"		"	"	"	"				OUT				"	IN C to B	"	"	"
		"	144 & 145	"	GND	"		"	IN	"	"					OUT			"	IN D to A	"	"	"
		"	146 & 147	"	GND	"		"	IN	"	"				OUT				"	IN D to B	"	"	"
		"	148 & 149	GND	5.0 V	"		"	IN	"	"			OUT					"	IN D to C	"	"	"
		"	150 & 151	GND	GND	IN		GND	GND	"	"					OUT			"	LT to A	"	"	"
		"	152 & 153	X	X	GND	IN	X	X	X	"					OUT			"	RBO to A	"	"	"
		"	154 & 155	GND	GND	5.0 V		IN	GND	GND	"					OUT			"	RBI to A	"	"	"

See footnotes at end of device types 08.

TABLE III. Group A inspection for device type 08.
Terminal conditions (pins not designated may be high ≥ 2.4 V or low ≤ 0.8 V; or open).

Subgroup	Symbol	MIL-STD-883 method	Cases E, F Test no.	1 IN B	2 IN C	3 LT	4 RBO	5 RBI	6 IN D	7 IN A	8 GND	9 OUT E	10 OUT D	11 OUT C	12 OUT B	13 OUT A	14 OUT G	15 OUT F	16 V_{CC}	Measured terminal	Limits Min	Limits Max	Unit
10	t_{PHL}	3003	156 & 157	GND	GND	5.0 V		5.0 V	GND	IN	GND					OUT			5.0 V	IN A to A	8	144	ns
Tc = 125°C	t_{PLH}	(Fig. 7)	158 & 159	"	"	"		"	"	"	"		OUT						"	IN A to D	"	"	"
		"	160 & 161	"	"	"		"	"	"	"	OUT							"	IN A to E	"	"	"
		"	162 & 163	"	"	"		"	"	"	"							OUT	"	IN A to F	"	"	"
		"	164 & 165	5.0 V	5.0 V	"		"	"	"	"					OUT			"	IN A to A	"	"	"
		"	166 & 167	GND	5.0 V	"		"	"	"	"				OUT				"	IN A to B	"	"	"
		"	168 & 169	5.0 V	5.0 V	"		"	"	"	"		OUT						"	IN A to D	"	"	"
		"	170 & 171	GND	GND	"	OUT	GND	"	"	"								"	IN A to RBO	"	"	"
		"	172 & 173	IN	"	"		5.0 V	"	GND	"			OUT					"	IN B to C	"	"	"
		"	174 & 175	"	"	"		"	"	"	"							OUT	"	IN B to F	"	"	"
		"	176 & 177	"	"	"		"	"	"	"						OUT		"	IN B to G	"	"	"
		"	178 & 179	"	"	"		"	5.0 V	"	"					OUT			"	IN B to A	"	"	"
		"	180 & 181	"	5.0 V	"		"	GND	5.0 V	"							OUT	"	IN B to F	"	"	"
		"	182 & 183	"	5.0 V	"		"	"	5.0 V	"						OUT		"	IN B to G	"	"	"
		"	184 & 185	"	5.0 V	"		"	"	GND	"	OUT							"	IN B to E	"	"	"
		"	186 & 187	"	IN	"		"	"	"	"		OUT						"	IN C to D	"	"	"
		"	188 & 189	5.0 V	IN	"		"	"	"	"				OUT				"	IN C to B	"	"	"
		"	190 & 191	"	GND	"		"	IN	"	"					OUT			"	IN D to A	"	"	"
		"	192 & 193	"	GND	"		"	IN	"	"				OUT				"	IN D to B	"	"	"
		"	194 & 195	GND	5.0 V	"		"	IN	"	"			OUT					"	IN D to C	"	"	"
		"	196 & 197	GND	GND	IN		GND	GND	"	"					OUT			"	LT to A	"	"	"
		"	198 & 199	X	X	GND	IN	X	X	X	"					OUT			"	RBO to A	"	"	"
		"	200 & 201	GND	GND	5.0 V		IN	GND	GND	"					OUT			"	RBI to A	"	"	"
11	Same tests, terminal conditions, and limits as subgroup 10 except T_C = -55°C.																						

1/ X = Input may be high level or low level.
2/ CKT except B.
3/ Output voltages shall be either:
(a) H = 2.4 volts minimum and L = 0.4 volts minimum when using high speed checker double comparator, or
(b) H ≥ 1.5 volts and L ≤ 1.5 volts when using a high speed checker single comparator.

TABLE III. Group A inspection for device type 09.
Terminal conditions (pins not designated may be high ≥ 2.0 V or low ≤ 0.8 V or open).

Subgroup	Symbol	MIL-STD-883 method	Cases A,B,C,D Test no.	1 IN B	2 IN C	3 BI	4 IN D	5 IN A	6 OUT E	7 GND	8 OUT D	9 OUT C	10 OUT B	11 OUT A	12 OUT G	13 OUT F	14 V_{CC}	Measured terminal	Limits Min	Limits Max	Unit
1 Tc = 25°C	V_{OL} 1/	3007	1	X	X	0.8 V	X	X	10 mA	GND							4.5 V	E		0.4	V
		"	2	"	"	"	"	"		"	10 mA						"	D		"	"
		"	3	"	"	"	"	"				10 mA					"	C		"	"
		"	4	"	"	"	"	"		"			mA				"	B		"	"
		"	5	"	"	"	"	"						10 mA			"	A		"	"
		"	6	"	"	"	"	"		"					10 mA		"	G		"	"
		"	7	"	"	"	"	"	"	"		10				10 mA	"	F		"	"
	CEX		8	0.8 V	0.8 V	2.0 V	2.0 V	0.8 V	5.5 V	"							"	E		250	µA
			9	"	"	"	"	"		"	5.5 V						"	D		"	"
			10	"	"	"	"	"		"		5.5 V					"	C		"	"
I			11	"	"	"	"	"		"			5.5 V				"	B		"	"
			12	"	"	"	"	"		"				5.5 V			"	A		"	"
			13	"	"	"	"	"		"					5.5 V		"	G		"	"
			14	"	"	"	"	"		"						5.5 V	"	F		"	"
	I C		15					-12 mA		"							"	IN A		-1.5	"
			16	-12 mA						"							"	IN B		"	"
			17		-12 mA					"							"	IN C		"	"
V			18				-12 mA			"							"	IN D		"	"
			19			-12 mA				"							"	BI		"	"
	IL	3009	20 2/	5.5 V	5.5 V	5.5 V	5.5 V	0.4 V		"							5.5 V	IN A	-0.7	-1.6	mA
		"	20 CKT C	5.5 V	"	"	"	0.4 V		"							"	IN A	-0.4	-1.3	"
		"	21 2/	0.4 V	"	"	"	5.5 V		"							"	IN B	-0.7	-1.6	"
		"	21 CKT C	0.4 V	"	"	"	"		"							"	IN B	-0.4	-1.3	"
I		"	22 2/	5.5 V	0.4 V	"	"	"		"							"	IN C	-0.7	-1.6	"
		"	22 CKT C	"	0.4 V	"	"	"		"							"	IN C	-0.4	-1.3	"
		"	23 2/	"	5.5 V	"	0.4 V	"		"							"	IN D	-0.7	-1.6	"
		"	23 CKT C	"	"	"	0.4 V	"		"							"	IN D	-0.4	-1.3	"
		"	24 2/	"	"	0.4 V	5.5 V	"		"							"	BI	-0.7	-1.6	"
		"	24 CKT C	"	"	0.4 V	5.5 V	"		"							"	BI	-0.4	-1.3	"
	IH1	3010	25	GND	GND	GND	GND	2.4 V		"							"	IN A		40	µA
		"	26	2.4 V	GND	"	"	GND		"							"	IN B		"	"
		"	27	GND	2.4 V	"	"	"		"							"	IN C		"	"
		"	28	"	GND	"	2.4 V	"		"							"	IN D		"	"
I		"	29	"	"	2.4 V	GND	"		"							"	BI		"	"
	IH2	3010	30	"	"	GND	"	5.5 V		"							"	IN A		100	µA
		"	31	5.5 V	"	"	"	GND		"							"	IN B		"	"
		"	32	GND	5.5 V	"	"	"		"							"	IN C		"	"
		"	33	"	GND	"	5.5 V	"		"							"	IN D		"	"
I		"	34	"	"	5.5 V	GND	"		"							"	BI		"	"
	CC	3005	35	GND	GND	GND	GND	GND		"							"	V_{CC}		47	mA
2	Same tests, terminal conditions, and limits as subgroup 1, except T_C = +125°C and V_{IC} tests are omitted.																				
3	Same tests, terminal conditions, and limits as subgroup 1, except T_C = -55°C and V_{IC} tests are omitted.																				

I
See footnotes at end of device type 09.

TABLE III. Group A inspection for device type 09 – Continued.
Terminal conditions (pins not designated may be high ≥ 2.0 V or low ≤ 0.8 V or open).

Subgroup	Symbol	MIL-STD-883 method	Cases A,B,C,D	1	2	3	4	5	6	7	8	9	10	11	12	13	14	Measured terminal	Limits		Unit
			Test no.	IN B	IN C	BI	IN D	IN A	OUT E	GND	OUT D	OUT C	OUT B	OUT A	OUT G	OUT F	V_{CC}		Min	Max	
7	Truth		36	GND	GND		GND	GND	H	GND	H	H	H	H	L	H	5.5 V				
Tc = 25°C	table		37	"	"		"	5.0 V	L	"	L	H	"	L	L	L	"				
			38	5.0 V	"		"	GND	H	"	H	L	"	H	H	"	"				
			39	5.0 V	"		"	5.0 V	L	"	H	H	"	H	"	"	"				
			40	GND	5.0 V		"	GND	L	"	L	"	"	L	"	H	"				
test			41	GND	"		"	5.0 V	L	"	H	"	L	H	"	"	"				
			42	5.0 V	"		"	GND	H	"	H	"	L	L	"	"	"		3/		
			43	5.0 V	"		"	5.0 V	L	"	L	"	H	H	L	L	"				
			44	GND	GND		5.0 V	GND	H	"	H	"	"	"	H	H	"				
			45	GND	"		"	5.0 V	L	"	L	"	"	"	"	H	"				
			46	5.0 V	"		"	GND	H	"	H	L	L	L	"	L	"				
			47	5.0 V	"		"	5.0 V	L	"	H	H	L	"	"	L	"				
			48	GND	5.0 V		"	GND	L	"	L	L	H	"	"	H	"				
			49	GND	"		"	5.0 V	L	"	H	"	L	H	"	"	"				
			50	5.0 V	"		"	GND	H	"	H	"	"	L	"	"	"				
			51	5.0 V	"		"	5.0 V	L	"	L	"	"	"	L	L	"				
			52	X	X	GND	X	X	L	"	L	"	"	"	L	L	"				
8	Truth table test		53 to 69	Same tests as subgroup 7, except T_C = 125°C.																	
			70 to 76	Same tests as subgroup 7, except T_C = -55°C.																	
9	t_{PHL}	3003	77 & 78	GND	GND	5.0 V	GND	IN		GND				OUT			5.0 V	IN A to A	8	104	ns
Tc = 25°C	t_{PLH}	(Fig 8)	79 & 80	"	"	"	"	"			OUT						"	IN A to D	"	"	"
			81 & 82	"	"	"	"	"	OUT	"							"	IN A to E	"	"	"
			83 & 84	"	"	"	"	"		"						OUT	"	IN A to F	"	"	"
			85 & 86	5.0 V	5.0 V	"	"	"	"	"				OUT			"	IN A to A	"	"	"
			87 & 88	GND	5.0 V	"	"	"		"			OUT				"	IN A to B	"	"	"
			89 & 90	5.0 V	5.0 V	"	"	"		"	OUT						"	IN A to D	"	"	"
			91 & 92	IN	GND	"	"	GND		"		OUT					"	IN B to C	"	"	"
			93 & 94	"	"	"	"	"		"						OUT	"	IN B to F	"	"	"
			95 & 96	"	"	"	"	"		"					OUT		"	IN B to G	"	"	"
			97 & 98	"	"	"	5.0 V	"		"				OUT			"	IN B to A	"	"	"
			99 & 100	"	5.0 V	"	GND	5.0 V		"						OUT	"	IN B to F	"	"	"
			101 & 102	"	5.0 V	"	"	GND	OUT	"							"	IN B to E	"	"	"
			103 & 104	"	5.0 V	"	"	5.0 V		"					OUT		"	IN B to G	"	"	"
			105 & 106	GND	IN	"	"	GND		"	OUT						"	IN C to D	"	"	"
			107 & 108	5.0 V	IN	"	"	GND		"			OUT				"	IN C to B	"	"	"
			109 & 110	GND	GND	"	IN	GND		"					OUT		"	IN D to G	"	"	"
			111 & 112	5.0 V	GND	"	IN	5.0 V		"			OUT				"	IN D to B	"	"	"
			113 & 114	GND	5.0 V	"	IN	GND		"		OUT					"	IN D to C	"	"	"
			115 & 116	GND	GND	IN	GND	GND		"				OUT			"	BI to A	"	"	"

See notes at end of device type 09.

TABLE III. Group A inspection for device type 09 – Continued.
Terminal conditions (pins not designated may be high ≥ 2.0 V or low ≤ 0.8 V or open).

Subgroup	Symbol	MIL-STD-883 method	Cases A,B,C,D	1	2	3	4	5	6	7	8	9	10	11	12	13	14	Measured	Limits		Unit
			Test no.	IN B	IN C	BI	IN D	IN A	OUT E	GND	OUT D	OUT C	OUT B	OUT A	OUT G	OUT F	V_{CC}		Min	Max	
10	t_{PHL}	3003	117 & 118	GND	GND	5.0 V	GND	IN		GND				OUT			5.0 V	IN A to A	8	144	ns
Tc = 125°C	t_{PLH}	(Fig 8)	119 & 120	"	"	"	"	"			OUT						"	IN A to D	"	"	"
			121 & 122	"	"	"	"	"	OUT	"							"	IN A to E	"	"	"
			123 & 124	"	"	"	"	"		"						OUT	"	IN A to F	"	"	"
			125 & 126	5.0 V	5.0 V	"	"	"	"	"				OUT			"	IN A to A	"	"	"
			127 & 128	GND	5.0 V	"	"	"		"			OUT				"	IN A to B	"	"	"
			129 & 130	5.0 V	5.0 V	"	"	"		"	OUT						"	IN A to D	"	"	"
			131 & 132	IN	GND	"	"	GND		"		OUT					"	IN B to C	"	"	"
			133 & 134	"	"	"	"	"		"						OUT	"	IN B to F	"	"	"
			135 & 136	"	"	"	"	"		"					OUT		"	IN B to G	"	"	"
			137 & 138	"	"	"	5.0 V	"		"				OUT			"	IN B to A	"	"	"
			139 & 140	"	5.0 V	"	GND	5.0 V		"						OUT	"	IN B to F	"	"	"
			141 & 142	"	5.0 V	"	"	GND	OUT	"							"	IN B to E	"	"	"
			143 & 144	"	5.0 V	"	"	5.0 V		"					OUT		"	IN B to G	"	"	"
			145 & 146	GND	IN	"	"	GND		"	OUT						"	IN C to D	"	"	"
			147 & 148	5.0 V	IN	"	"	GND		"			OUT				"	IN C to B	"	"	"
			149 & 150	GND	GND	"	IN	GND		"					OUT		"	IN D to G	"	"	"
			151 & 152	5.0 V	GND	"	IN	5.0 V		"			OUT				"	IN D to B	"	"	"
			153 & 154	GND	5.0 V	"	IN	GND		"		OUT					"	IN D to C	"	"	"
			155 & 156	GND	GND	IN	GND	GND		"				OUT			"	BI to A	"	"	"
11	Same tests, terminal conditions and limits as for subgroup 10, except T_C = -55°C.																				

1/ X = Input may be high level or low level.
2/ CKT except B.
3/ Output voltages shall be either:
(a) H = 2.4 volts minimum and L = 0.4 volts minimum when using high speed checker double comparator, or
(b) H ≥ 1.5 volts and L ≤ 1.5 volts when using a high speed checker single comparator.

5. PACKAGING

5.1 Packaging requirements. For acquisition purposes, the packaging requirements shall be as specified in the contract or order (see 6.2). When packaging of materiel is to be performed by DoD or in-house contractor personnel, these personnel need to contact the responsible packaging activity to ascertain packaging requirements. Packaging requirements are maintained by the Inventory Control Point's packaging activity within the Military Service or Defense Agency, or within the military service's system command. Packaging data retrieval is available from the managing Military Department's or Defense Agency's automated packaging files, CD-ROM products, or by contacting the responsible packaging activity.

6. NOTES

(This section contains information of a general or explanatory nature that may be helpful, but it is not mandatory)

6.1 Intended use. Microcircuits conforming to this specification are intended for original equipment design applications and logistic support of existing equipment.

6.2 Acquisition requirements. Acquisition documents should specify the following:

a. Title, number, and date of the specification.

b. PIN and compliance identifier, if applicable (see 1.2).

c. Requirements for delivery of one copy of the conformance inspection data pertinent to the device inspection lot to be supplied with each shipment by the device manufacturer, if applicable.

d. Requirements for certificate of compliance, if applicable.

e. Requirements for notification of change of product or process to contracting activity in addition to notification to the qualifying activity, if applicable.

f. Requirements for failure analysis (including required test condition of method 5003 of MIL-STD-883), corrective action, and reporting of results, if applicable.

g. Requirements for product assurance options.

h. Requirements for special carriers, lead lengths, or lead forming, if applicable. These requirements should not affect the part number. Unless otherwise specified, these requirements will not apply to direct purchase by or direct shipment to the Government.

i. Requirements for "JAN" marking.

j. Packaging requirements (see 5.1).

6.3 Qualification. With respect to products requiring qualification, awards will be made only for products which are, at the time of award of contract, qualified for inclusion in Qualified Manufacturers List QML-38535 whether or not such products have actually been so listed by that date. The attention of the contractors is called to these requirements, and manufacturers are urged to arrange to have the products that they propose to offer to the Federal Government tested for qualification in order that they may be eligible to be awarded contracts or purchase orders for the products covered by this specification. Information pertaining to qualification of products may be obtained from DSCC-VQ, 3990 E. Broad Street, Columbus, Ohio 43123-1199.

6.4 Superseding information. The requirements of MIL-M-38510 have been superseded to take advantage of the available Qualified Manufacturer Listing (QML) system provided by MIL-PRF-38535. Previous references to MIL-M-38510 in this document have been replaced by appropriate references to MIL-PRF-38535. All technical requirements now consist of this specification and MIL-PRF-38535. The MIL-M-38510 specification sheet number and PIN have been retained to avoid adversely impacting existing government logistics systems and contractor's parts lists.

6.5 Abbreviations, symbols, and definitions. The abbreviations, symbols, and definitions used herein are defined in MIL-PRF-38535, MIL-HDBK-1331, and as follows:

GND ..... Ground zero voltage potential
V_{IN} ..... Voltage level at an input terminal
I_{IN} ..... Current flowing into an input terminal

6.6 Logistic support. Lead materials and finishes (see 3.4) are interchangeable. Unless otherwise specified, microcircuits acquired for Government logistic support will be acquired to device class B (see 1.2.2), lead material and finish A (see 3.4). Longer length leads and lead forming should not affect the part number.

6.7 Substitutability. The cross-reference information below is presented for the convenience of users. Microcircuits covered by this specification will functionally replace the listed generic-industry type. Generic-industry microcircuit types may not have equivalent operational performance characteristics across military temperature ranges or reliability factors equivalent to MIL-M-35810 device types and may have slight physical variations in relation to case size. The presence of this information should not be deemed as permitting substitution of generic-industry types for MIL-M-38510 types or as a waiver of any of the provisions of MIL-PRF-38535.

Military device type	Generic-industry type
01	5442
02	5443
03	5444
04	5445
05	54145
06	5446
07	5447
08	5448
09	5449

6.8 Manufacturers' designation. Manufacturers' circuits which form a part of this specification are designated with an "X" as shown in table IV herein.

TABLE IV. Manufacturers' designations.

Device type	Circuit				
	Texas Instruments	Signetics	National Semiconductor/ Fairchild Semiconductor	Motorola Inc.	Fairchild
01	D	C	E	B	A
04	C	A	E	B	D
05	C	A	E	B	D
06	C	B	D		
07	C	B	D		
08	B	C	E	A	

6.9 Changes from previous issue. Marginal notations are not used in this revision to identify changes with respect to the previous issue due to the extensiveness of the changes.

Custodians:
Army - CR
Navy - EC
Air Force - 11
DLA - CC

Preparing activity:
DLA - CC

(Project 5962-2093)

Review activities:
Army - MI, SM
Navy - AS, CG, MC, SH, TD
Air Force - 03, 19, 99

NOTE: The activities listed above were interested in this document as of the date of this document. Since organizations and responsibilities can change, you should verify the currency of the information above using the ASSIST Online database at http://assist.daps.dla.mil.