INCH-POUND

MIL-HDBK-660B
21 August 2012
SUPERSEDING
MIL-HDBK-660A
7 July 1972

MILITARY STANDARDIZATION HANDBOOK

FABRICATION OF RIGID WAVEGUIDE ASSEMBLIES (SWEEP BENDS AND TWISTS)

This handbook is for guidance only.
Do not cite this document as a requirement.

AMSC N/A

FSC 5985

FOREWORD

1. This handbook is approved for use by all Departments and Agencies of the Department of Defense.

2. This document provides information on methods of fabricating waveguide assemblies for rigid RF transmission lines. It provides information and guidance to personnel concerned with the fabrication of waveguide assemblies to fix equipments and circuits in the field. The handbook is not intended to be referenced to purchase specifications except for informational purposes, nor should it supersede any specification requirements.

3. Comments, suggestions, or questions on this document should be addressed to DLA Land and Maritime, ATTN: VAT, Post Office Box 3990, Columbus, OH 43218-3990, or emailed to Tubesamps@dla.mil. Since contact information can change, you may want to verify the currency of this address information using the ASSIST Online database at https://assist.dla.mil.

CONTENTS

SECTION Page

1. SCOPE 1

1.1 Scope 1
1.2 Purpose of handbook 1
1.2.1 Purpose of handbook 1
1.2.2 Design 1
1.2.3 Part or identifying number (PIN) 1
1.2.4 Marking 3

2. APPLICABLE DOCUMENTS 5

2.1 General 5
2.2 Government documents 5
2.2.1 Specification, standards, and handbooks 5
2.2.2 Other Government documents, drawings, and publications 5
2.3 Non-Government publications 5
2.4 Order of precedence 5

3. DEFINITIONS (not applicable) 7

4. GENERAL REQUIREMENTS (PREPARATION FOR BENDING AND TWISTING) 7

4.1 Fabrication of template 7
4.1.1 Template materials 7
4.1.2 Conforming template shape 7
4.2 Annealing 7
4.2.1 Annealing brass waveguide 8
4.2.2 Filling with gas before annealing(optional) 8
4.2.3 Annealing aluminum waveguide 8
4.3 Filling 8
4.3.1 Alloy method 8
4.3.2 Rosin method 9
4.4 Bending fabrication 9
4.4.1 Pines bending machine 10
4.4.1.1 Draw bending 11
4.4.1.2 Metal mandrel 11
4.4.1.2.1 Plug mandrel 11
4.4.1.2.2 Formed mandrel 12
4.4.1.2.3 Ball mandrel 12
4.4.1.2.4 Cable mandrel 12
4.4.1.2.5 Universal mandrel 13
4.4.1.2.6 Small line mandrel 13
4.4.1.3 Mandrel selection 13
4.4.1.4 Improper tooling and setting 13
4.4.1.5 Lubrication 15

CONTENTS – Continued.

SECTION Page

4.4.1.6 Twisting and bending 15
4.4.1.7 Mandrel material and finish 15
4.4.1.8 Polytetrafluoroethylene mandrel 15
4.4.2 Wallance bending machine 16
4.4.3 Hydraulic push press and portable hydraulic bender method 19
4.4.4 Hand bending machine 21
4.4.5 Bench vise 22
4.5 Twisting of the waveguide 22

5. DETAILED REQUIRMENTS (PRE-ASSEMBLY, ASSEMBLY, FINISHING OPERATIONS) 25

5.1 Removal of filling 25
5.1.1 Alloy method 25
5.1.2 Rosin method 25
5.2 Removal of dents and wrinkles from waveguide 26
5.3 Cutting 26
5.3.1 Hacksaw 26
5.3.2 Power saw 26
5.3.3 Squareness of cut 26
5.3.4 Modification of flanges and heavy wall waveguides for proper fit 26
5.3.4.1 Cover flange 26
5.3.4.2 Choke flange 27
5.4 Cleaning 28
5.5 Attachment of flanges 28
5.5.1 Assembly of contact or cover flange to waveguide 28
5.5.2 Assembly of choke or socket flanges to waveguide 29
5.5.3 Clamps and jigs 30
5.6 Silver brazing brass waveguide 30
5.7 Brazing flanges on aluminum waveguide 35
5.7.1 Torch tips 36
5.7.2 Brazing rod 36
5.8 Dip brazing aluminum waveguide 36
5.8.1 Brazing flux 36
5.8.1.2 Preparation of parts 36
5.8.1.2.1 Cleaning 36
5.8.1.2.2 Chemical dipping 36
5.8.2 Assembly 37
5.8.2.1 Final cleaning 37
5.9 Dry air piping connections 37
5.9.1 Air connection completion 37
5.10 Finishing operation 37
5.10.1 Finishing operation 37
5.10.1.1 Machining 37
5.10.1.2 Smoothing 37
5.10.2 Cleaning waveguide 37

CONTENTS continued

SECTION Page

6. NOTES 39

6.1 Intended use 39
6.2 Subject term (key word) listing 39
6.3 Changes from pervious issue 39

ILLUSTRATIONS

Figure		Page
1.	Waveguide side and bend identification	2
2.	Electrical length of bend	4
3.	Wooden waveguide template	6
4.	Wire template	6
5.	Template for waveguide twist	7
6.	Wall distortion of bend	10
7.	Draw bend	11
8.	Types of mandrels	12
9.	Undersize plug mandrel setting	12
10.	Wrinkling caused by tapered mandrel	14
11.	Mandrel setting too deep	14
12.	Inherent gap between tangent point and lip of wiper die	14
13.	Depth of support of plug, form, and ball mandrels	15
14.	Details of bending forms for Wallace bending machine	17
15.	Bending forms for edgewise bend for 3 x 1.5 inch guide	17
16.	Detail of bending forms for edgewise bends for 3 x 1.5 inch guide	18
17.	Bending form for sideways bend for 3 x 1.5 inch guide	18
18.	Detail of forms for sideways bend	18
19.	Greenlee hydraulic bender, model 775	20
20.	Bending waveguide in simple hydraulic press	20
21.	Waveguide dies used with Greenlee bender	21
22.	Waveguide hand bending tool	22
23.	Twisting machine for waveguide	22
24.	Twisting machine detail	23
25.	Cross section of clamps for 3 x 1.5 inch waveguide twisting machine	24
26.	Waveguide twisting tool for 3 x 1.5 inch waveguide	24
27.	Tool for use with twisting machine	25
28.	Modifying standard RG-95/U heavywall aluminum waveguide for use with standard US-406A/U choke flange	27
29.	Modification of standard UG-406A/U choke flange for use with standard RG-95/U heavywall Aluminum waveguide	28
30.	Through flange on waveguide	29
31.	Concentricity of waveguide and flange	30
32.	Squareness of flange face with waveguide	31
33.	Waveguide and flange assembly-butt design	32
34.	Waveguide squareness	33
35.	Torch brazing	34
36.	Jig for through flange	34
37.	Silver soldering waveguide and flange-sleeve design	35
38.	Directing flame on contact or cover flange	35
39.	Brazing waveguide and flange-butt design	37
40.	Fitting for air connection	38

TABLES

Table

I Waveguide bend values 2
II. Surface toughness tolerances of waveguides 38

1. SCOPE

1.1 Scope. This handbook is intended for the electronic installations technician to be used as a guide for fabricating rectangular waveguide bends and twists used in the microwave region of the electronic spectrum.

a. Where bends and twists are required in equipment, it may not always be possible to obtain bends and twists of the exact lengths or radii required because they are not standard, and therefore are not carried in supply, or manufactured by industry as a stock item. By using the techniques described in this handbook, such bends and twists can be fabricated in the field, and the equipment for which they are intended can be placed in service in a shorter time than purchased parts could be supplied.

b. This handbook describes the assembly and finishing of components fabricated from the two most commonly used materials, brass and aluminum. The processes and methods used in the fabrication of waveguide assemblies from other materials are similar to the procedures described herein. Careful attention should be paid, however, to brazing only the components made from similar metals to prevent the possibility of galvanic action between parts.

1.2 PURPOSE OF HANDBOOK

1.2.1 Purpose of handbook. For purposes of this handbook, the term twists means a waveguide configuration similar to those shown in figures 23 and 24. These illustrations should enable a technician to differentiate between twists and those waveguide assemblies that are constructed by ready-made elbows and sweep bends.

1.2.2 Design. Waveguides are supplied in straight lengths of from 6 to 14 feet, but usually the length is 10 feet. The number of joints or couplings in a run should be kept to a minimum in order to obtain the most efficient electrical transmission. In an installation, there will be a need for bends, twists, and off-sets. Since all conditions cannot be met with standard fittings, it is desirable to be able to form bends and twists in the straight sections of the waveguide. These can be formed in the full straight lengths by the methods described in this handbook.

a. Bending of corrosion-resisting steel or magnesium waveguides is not permissible.

b. Ordinarily, bends and twists should not be sharper than those given in table I, but it is possible to make sharper bends and twists than specified herein without causing excessive attenuation, provided that reflections are avoided. This is done by forming the bend so that its electrical length (mean “L” in figure 2) is exact multiple of waveguides half wavelengths, and preferably at the midband of the frequency at which it is to operate. This will cause the reflection at either end of the bend to cancel out. Similarly, twists may be so designed that their length is an exact multiple of waveguide half wavelengths.

1.2.3 Part or Identifying number (PIN). Proper identification of waveguide bends referenced herein is provided in figure 1.

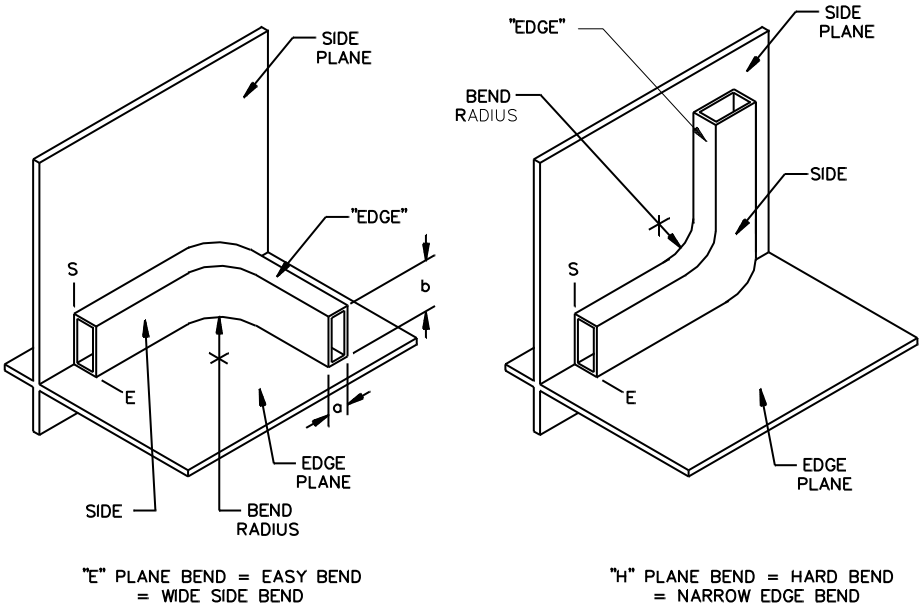

FIGURE 1. Waveguide side and bend identification.

TABLE I. Waveguide bend values.

Waveguides	Bending radius	Dimension
23 to 6.5 inches	Use manufactured elbows	N/A
6.5 x 3.25 inches	Minimum bending radius “E” or “H” Minimum length for 90-degree twist Maximum inside wall variance	24 inches 36 inches ± .125 inch
3 x 1.5 inches	Minimum bending radius “E” or “H” Minimum length for 90-degree twist Maximum inside wall variance	18 inches 3 inches ± .062 inch
1 x 3 inches RG 109/U	Minimum bending radius “E” No “H” bends, use manufactured elbows Minimum length for 90-degree twists Maximum inside wall variance	12 inches 30 inches ± .062 inch

TABLE I. Waveguide bend values - Continued.

Waveguides	Bending radius	Dimension
.750 x 1.5 inches M85/1-067-XXX (RG 50/U) M85/1-065-XXX (RG-106/U)	Minimum bending radius, “E” No “H” bends, use manufactured elbows Minimum length for 90-degree twist Maximum inside wall variance	12 inches 15 inches ± .031 inch
.625 x 1.125 inches	Minimum bending radius, “E” Minimum bending radius, “H” Minimum length for 90-degree twist Maximum inside wall variance	6 inches 12 inches 18 inches ± .031 inch
1.5 x .5 inches RG 110/U	Minimum bending radius “E” or “H” Minimum length for 90-degree twist Maximum inside wall variance	6 inches 15 inches ± .031 inch

1.2.4 Marking. Unless conditions make it absolutely necessary, never make a bend or twist sharper than the specified minimum. Under no conditions should the radius of a bend or twist be less than one full wavelength of the center frequency for any waveguide. The reflections caused by poorly matched bends can result in a high standing wave ratio.

$$Wavelength\ in\ cm = \frac{30{,}000}{f\ in\ MHz}$$

$$Wavelength\ in\ inches = \frac{11{,}808}{f\ in\ MHz}$$

EXAMPLE A: The radii of preformed bends for M85/1-043-XXX (RG 48/U) is 7.5 inches (191 mm), whereas, the radii of bends formed for M85/1-043-XXX (RG 48/U) TE_{10} mode wavelength range (lowest to highest recommended operating frequency) is from 4.539 to 2.987 inches (115.29 to 75.87 mm). The mean wavelength is 3.763 inches (96 mm) and a waveguide half wavelength is 1.8815 inches (47.790 mm). Any multiple of 1.8815 inches (47.790 mm) that generates a radius greater than 7.5 inches (191 mm) should be used as the mean electrical length of a formed bend for M85/1-043-XXX (RG 48/U) waveguide.

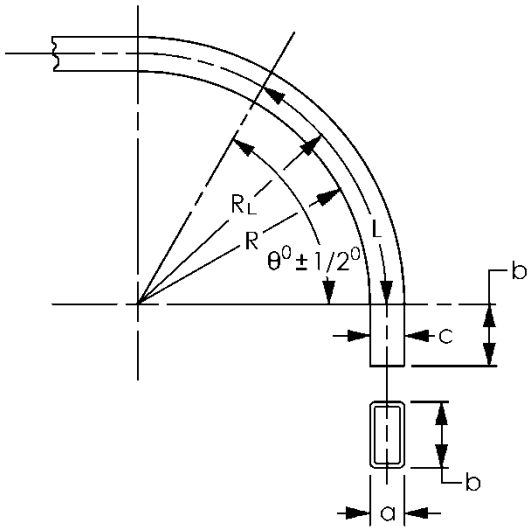

$$R_L = 57.32° \; x \; \frac{L}{\Theta°}, \; R = R_L - \frac{c}{2}$$

L = mean electrical length
c = height or width of outer dimension of waveguide depending on plane of bend.
b = larger dimension of waveguide

FIGURE 2. Electrical length of bend.

To determine the radius of a 90-degree bend, the following calculations are made.

From the above formula in Example A: $R_L = \frac{57.32° \bullet L}{90°} \; \theta = 90°$

R_L = 0.637L

Referring to M85/1-043-XXX (RG 48/U), operating in the TE_{10} mode where R_L is greater than 7.5 + $\frac{a}{2}$ inches, where R = 7.5 inches and L is a multiple of $\frac{\lambda}{2}$. λ = 3.763 inches, $\frac{\lambda}{2}$ = 1.8815 inches, a = 1.34 inches, b = 2.84 inches, c = 1.5 inches for an "E" bend.

Then let L = 6 x $\frac{\lambda}{2}$ = 11.289 inches, then R_L = 0.637 x 11.289 = 7.2 inches and R = 6.44 inches.

Since the resultant value is less than 7.5 inches, the radius cannot be used. Based on similar computations,

when: L = 7 x $\frac{\lambda}{2}$ = 13.170, R_L = 8.39, R = 7.64 inches

L = 8 x $\frac{\lambda}{2}$ = 15.05, R_L = 9.588, R = 8.838 inches and so forth; hence, the radii computed for a value of L which is a multiple of $\frac{\lambda}{2}$ of 7 or greater may be used.

For an "H" bend, c = 3.0 inches

when: L = 7 x $\frac{\lambda}{2}$ = 13.170, R_L = 8.39, R = 6.89 inches

L = 8 x $\frac{\lambda}{2}$ = 15.05, R_L = 9.588, R = 8.09 inches and so forth; hence a value of L which is a multiple of $\frac{\lambda}{2}$ of 8 or greater may be used.

2. APPLICABLE DOCUMENTS

2.1 General. The documents below are not necessarily all of the documents referenced herein, but are those needed to understand the information provided by this handbook.

2.2 Government documents.

2.2.1 Specifications, standards, and handbooks. The following specifications, standards, and handbooks form a part of this document to the extent specified herein.

FEDERAL SPECIFICATIONS

O-F-499	-	Flux, Brazing (Silver Brazing Filler Metal, Low Melting Point).
QQ-B-654	-	Brazing, Alloys, Silver.

DEPARTMENT OF DEFENSE SPECIFICATIONS

MIL-DTL-3970	-	Waveguide Assemblies, Rigid, General Specification for.

(Copies of these documents are available online at https://assist.dla.mil/quicksearch/ or from the Standardization Document Order Desk, 700 Robbins Avenue, Building 4D, Philadelphia, PA 19111-5094.)

2.2.2 Other Government documents, drawings, and publications. The following other Government documents, drawings, and publications form a part of this document to the extent specified herein.

2.3 Non-Government publications. The following document(s) form a part of this document to the extent specified herein.

AMERICAN SOCIETY OF MECHANICAL ENGINEERS (ASME)

ASME B46.1	-	Surface Texture (Surface Roughness, Waviness, and Lay).

(Application for copies should be addressed to: American Society of Mechanical Engineers (ASME), 3 Park Avenue, M/S 10D, New York, NY 10016-5990.)

AMERICAN WELDING SOCIETY (AWS)

AWS A5.8	-	Filler Metals for Brazing and Braze Welding.

(Application for copies should be addressed to: American Welding Society (AWS), 550 N. W. LeJeune Road, Miami FL 33126.)

2.4 Order of precedence. In the event of a conflict between the text of this document and the references cited herein, the text of this document takes precedence. Nothing in this document, however, supersedes applicable laws and regulations unless a specific exemption has been obtained.

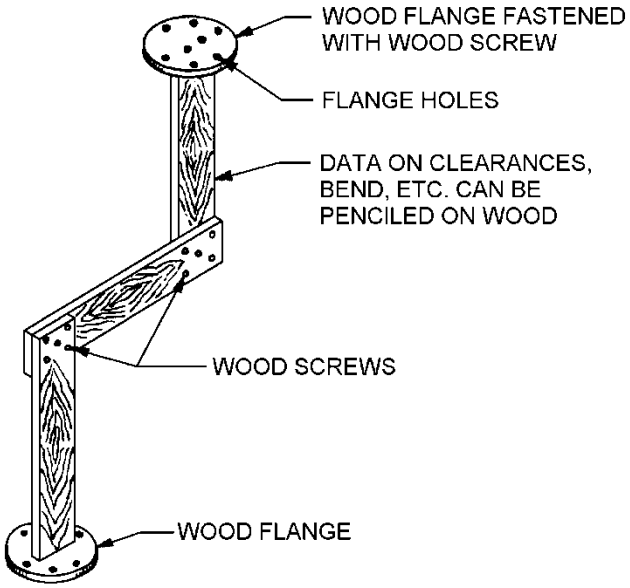

. FIGURE 3 Wooden waveguide template.

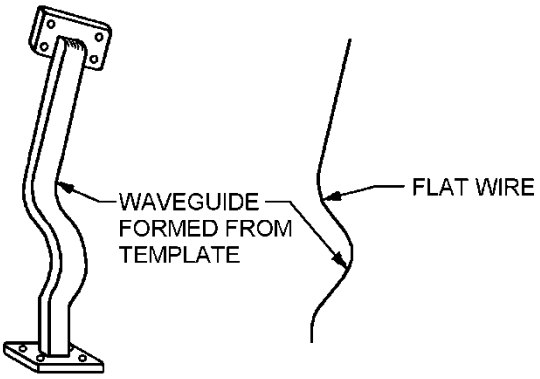

FIGURE 4. Wire template.

3. DEFINITIONS. Not applicable.

4. GENERAL REQUIREMENTS (PREPARATION FOR BENDING AND TWISTING)

4.1 Fabrication of template. The first step in fabricating waveguide bends is to make a full-scale template (see figures 3 and 4). The purpose of the template is to provide the shop with accurate information as to the shape, radius, and angle of all bends and twists in the waveguide as well as the position of the connection, flange holes, and overall length of the run.

4.1.1 Template materials. The template can be made of .5-inch mild steel, wire, plastic, or wood. If the template is made of wood, choose its size to approximate the size of the waveguide to be installed. The flange can be made with wood to the exact dimensions including hole spacings. By using a wood saw, hammer, nails, and woodscrews, the template could be made at its given location and returned to the shop for waveguide fabrication.

a. The advantages of using wooden templates include:

i. A rigid shape can be transported easier than a flexible one.

ii. Wood can be cut to approximate the dimensions of the waveguide.

iii. Ease of marking wood to note proper clearance for bends.

b. The disadvantage in using wooden templates is that a gradual radius cannot be shown.

4.1.2 Conforming template shape. When the template is at the shop, it can be placed on a bench or table and one flange can be fastened securely to the table in the proper position. The waveguide bend to be fabricated can then be made up until it sets between these flanges and conforms to the shape of the template. For making a twist in a waveguide where no “H” or “E” bends are required, a template as shown in figure 5 can be used.

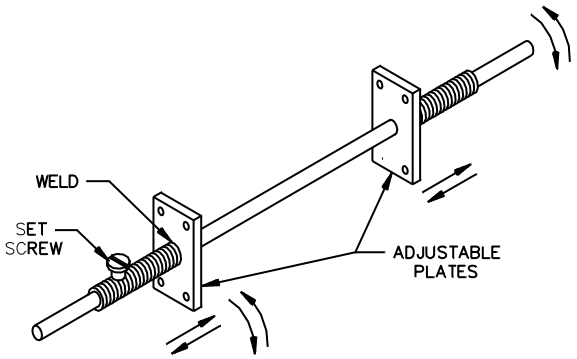

FIGURE 5. Template for waveguide twist.

4.2 Annealing. Annealing is always necessary if the waveguide is to be formed in any way. If the guide is filled with rosin or alloy, filling is performed after annealing.

4.2.1 Annealing brass waveguide. A commercial brass waveguide is 90 percent copper and 10 percent zinc.

a. To properly anneal this waveguide, it should be heated to a temperature of 427ºC (800ºF) to 565ºC (1,050ºF), depending on the degree of softness desired. Estimated time at temperatures for typical tubes would be 8 minutes for .040-inch gauge wall tubing and 15 minutes for .080-inch wall tubing. The waveguide should then be cooled in air.

NOTE: The higher temperature will result in a softer waveguide but should only be used for making sharp radius bends.

b. A good average temperature for the majority of bends is 482ºC (900ºF). If temperature control is not possible, 650ºC is approximately cherry red on brass.

c. As an emergency, a waveguide can be annealed using two torches. The torch tip should be selected that gives a large soft or spread-out flame to avoid hot spots. Move the flame over both sides of the waveguide continuously until the brass is cherry red.

4.2.2 Filling with gas before annealing (optional). This process applies only to commercial bronze, 90 percent. If the procedure outlined below is followed, it will eliminate oxidation; and the waveguide will remain clean, smooth, and free from discoloration.

a. Provide wooden plugs for the two ends of the waveguide sections. These should fit tightly.

CAUTION: IF THE PLUGS FIT TOO TIGHTLY WHEN COLD, THEY WILL EXPAND AND DISTORT THE WAVEGUIDE WHEN HEATED.

b. In one of the plugs, insert a hose connection and valve.

c. Close the waveguide section with the wooden plugs and attach a carbon dioxide tank to the hose connection.

d. Fill the sections with carbon dioxide until no air remains inside. When the guide is properly filled, a match will go out when placed in front of the escape valve. Never use more than 2 pounds of pressure per square inch.

e. Now anneal the section in the usual way as outlined above.

4.2.3 Annealing aluminum waveguide. The proper annealing temperature for aluminum waveguide is 343ºC to 427ºC (650ºF to 800ºF). The amount of time in the furnace should only be long enough to insure that the temperature is the same throughout the metal. Too high a temperature or too much time in the furnace will result in large grain size. The waveguide is then cooled in air at room temperature. Too rapid cooling will result in warping.

4.3 Filling. Unless a bending machine with a mandrel is used, to prevent deformation, the waveguide must be filled with some solid material before bending. Filling may be done with an alloy or rosin; separate procedures for each of these methods as in 4.3.1 and 4.3.2.

4.3.1 Alloy method. When the alloy method is used for filling, the guide should first be thoroughly annealed as outlined in 4.2 and allowed to cool. The guide should then be filled as follows:

a. Tightly plug the guide at one end with a wooden plug.

b. Melt the required quantity of bending alloy in a welded corrosion-resisting steel container suspended in boiling water. (The alloy melts at 71ºC to 82ºC (160ºF to 180ºF)).

NOTE: The bending alloy is a type of Wood's metal (a mixture of bismuth, lead, tin, and cadmium). The trade names are Cerrobend, Bendalloy, or equal.

c. Fill the waveguide with light oil (such as SAE 10), cover the top end, and move the guide about so as to splash the oil on all interior surfaces. Then pour out the oil, leaving 1 or 2 inches in the bottom of the guide.

CAUTION: CAREFUL ATTENTION TO OILING IS NECESSARY TO PREVENT THE ALLOY FROM TINNING THE GUIDE, MAKING CLEANING VERY DIFFICULT

d. Fill the guide with the melted alloy, allowing the alloy to run down the side of the guide in order to avoid air pockets.

e. Immediately lower the filled guide into a quench tank containing rapidly circulating cold water, leaving it there long enough for the guide and alloy to reach tank temperature throughout.

NOTE: Rust-resistant iron or corrosion-resisting steel is required for tank construction. Plain steel will rust when in constant contact with boiling water and steam (formed during initial contact of hot guide). Copper, aluminum, and galvanized iron tank will contaminate the alloy.

f. Remove the filled guide and rewarm it in hot water to about 90ºF to 100ºF. Remove the wooden plug from the bottom of the guide. The guide is now ready for bending and twisting.

IMPORTANT: Good results with alloy fillers depend entirely on rapid quenching, adequate cooling and rewarming before bending.

4.3.2 Rosin method When rosin is used as a filler, the guide must first be annealed and then filled as follows:

a. Estimate how much rosin is needed to fill the guide. Melt the rosin. Melting is usually done in a vat by means of steam coils.

CAUTION: IF OTHER MEANS OF HEATING ARE USED, BE SURE TO HEAT THE SIDES OF THE CONTAINER FIRST. TOO MUCH HEAT APPLIED AT THE BOTTOM WILL CAUSE AN EXPLOSION.

b. When the guide has cooled (after annealing) just enough so that it will not burn wood, drive a wooden plug in one end, place the guide in an upright position with the plugged end down, and fill with melted rosin.

CAUTION: IF THE GUIDE IS COLD, THE ROSIN WILL CONGEAL WHEN POURED FORMING AIR POCKETS WHICH WILL CAUSE THE GUIDE TO CAVE IN DURING BENDING OR TWISTING.

c. Allow the guide to cool naturally; then look for a cone-shaped hole caused by contraction of the rosin cooling at the top end of the guide. If the hole is deep, add melted rosin and allow to cool; if not very deep, fill with loose rosin.

d. Plug the top end of the guide with a wooden plug. The guide is now ready for bending and twisting.

NOTE: Wrinkles may be hammered out before removing the filling, because rosin when powered by hammer blows, expands and occupies more space than solid filling.

4.4 Bending fabrication. Bending can be done by using a Pines bender, Wallace bender, hydraulic push press, portable pipe bender, hand bending machine, or bench vise. The Pines and Wallace benders do not require fillers for bending. Precise metal-forming operations on the Pines and Wallace bending machines provide smoother bends than with other types of benders. Greater precision is obtainable with the Pines bender than the Wallace bending machine. Shorter radii bends can be formed on the bending press but with accompanying guide deformation reducing the cross section area inside the bend. Double ogee curves formed by a consecutive series of bends are preferred to the use of several 90 degree elbows. Better electrical characteristics may be realized if the mechanical tolerances on the guide are maintained in bending complex forms.

4.4.1 Pines bending machine. Precision metal-forming operations can be done on a Pines Rotary Bending Machine. Smooth bends can be formed to a bend accuracy of ±.5 degree. A complete involved shape can be produced by a series of bends. When a guide is bent, it is thrown into tension on the outside and into compression on the inside. Thickening the inner wall strengthens it; stretching the outer wall weakens it, tending to rupture (see figure 6) the guide. The guide cross section is reduced by the tension and compression. Two types of internal support that may be used in bending are:

a. Form bending. The filler used may be rosin, low melting alloy, nylon, polytetrafluoroethylene, or articulated metal mandrels. The guide is then formed around a radial post.

b. Draw bending. The waveguide is drawn off an interior mandrel, either fixed or flexible, through a form-fitting radius die (see figure 7).

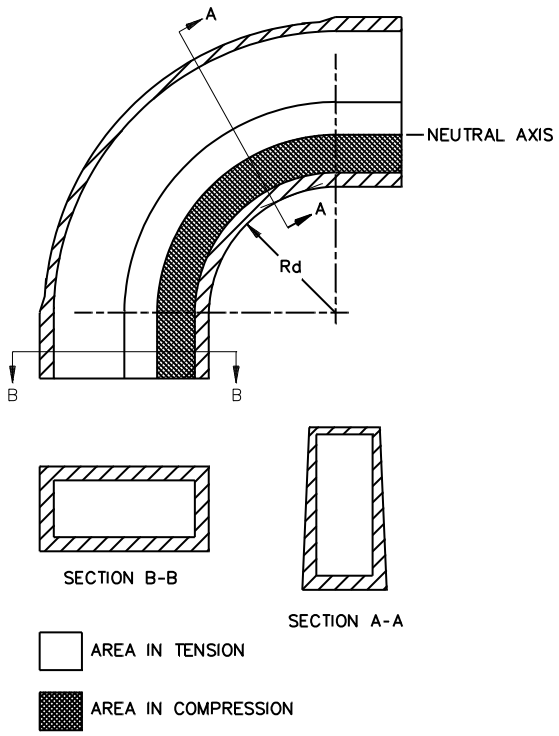

FIGURE 6. Wall distortion of bend.

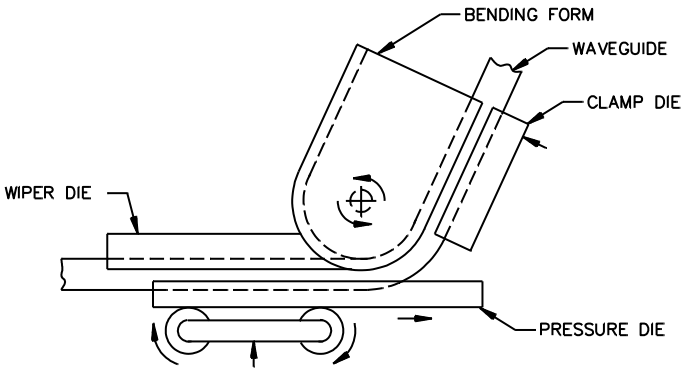

FIGURE 7. Draw bend.

4.4.1.1 Draw bending. In draw bending, the waveguide is clamped to a rotating die. When the form is rotated, the guide is drawn against a pressure die. The mandrel follows the radius while supporting the walls preventing collapse of the guide. The guide is boxed in on all sides by the outer dies. The wiper die used prevents wrinkling or buckling of the guide at the tangent point of the bend. The inside dimensions of the waveguide can be held to tolerances of ± 0.1 percent with the articulated mandrel. Tolerances approaching those of the articulated mandrel can be realized using a polytetrafluoroethylene mandrel. Small radius bends may be formed by applying the basic techniques very carefully. Complex shapes can be formed to meet design requirements of limited space. Instead of bends separated by straight sections, space can be saved when bends are placed tangent to each other.

4.4.1.2 Metal mandrel. The use of a mandrel is necessary to bend the waveguide. The various types of mandrels are plug, formed, ball, cable, and universal (see figure 8). The inside surface finish on bending depends on the type of mandrel finish.

4.4.1.2.1 Plug mandrel. The plain or plug type is the simplest form of mandrel made from solid bars rounded on the end. This mandrel may be used on moderate wall waveguide for bends having a large radius. The tip of the plug mandrel is inserted up to or just beyond the bend tangency (see figure 9). During bending, the guide is drawn around the form and pulled off the mandrel, thereby removing the internal support. However the actual bending point, the area of greatest tendency for wrinkling, is fully supported.

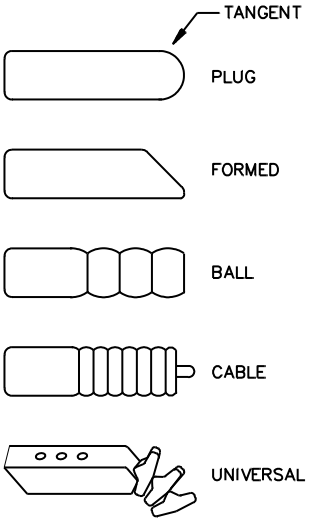

FIGURE 8. Types of mandrels.

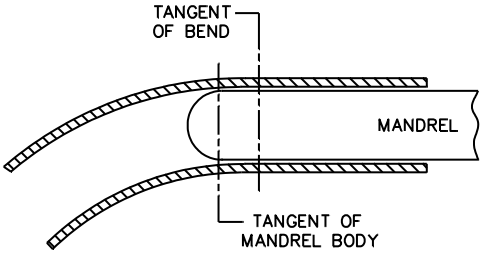

FIGURE 9. Undersize plug mandrel setting.

4.4.1.2.2 Formed mandrel. The end of the formed mandrel is shaped to coincide with the bend considerably beyond the point of tangency. More internal support is realized with the formed mandrel. Sharper bends with thinner wall guide can be made with the formed mandrel than with the plain mandrel.

4.4.1.2.3 Ball mandrel. The single ball type mandrel has a ball tip moving in a flexible socket. The ball tip can be swung on the solid body. This movement enables it to be inserted beyond the point of tangency permitting a full radius swing as the guide is drawn into the bend. The guide inside dimension receives full support from the ball. In addition to being able to make tight radii bends on a thin walled-guide, the ball mandrel performs a sizing action. A multiple-ball type mandrel extends further into the bend than the single-ball type. The greater number of balls required increases the possibility of the walls collapsing.

4.4.1.2.4 Cable mandrel. The cable type mandrel is very useful in making compound bends requiring deep mandrel support. Compound bends do not permit straight clamping between bends because the adjacent bends may have their points of tangency too near each other.

4.4.1.2.5 Universal mandrel. The universal mandrel provides twisting while draw bending. Individual bends need not be separated by short straight sections. The freedom of movement of this mandrel permits an H bend in one plane to closely follow an E-bend in the other plane. The mandrel can withstand the heavy pressures yet can hold the internal dimensions to very close tolerances.

4.4.1.2.6 Small line mandrel. Nylon and polytetrafluoroethylene mandrels may be used on a waveguide with very small cross sections and complex shapes.

4.4.1.3 Mandrel selection. The plug or form mandrel is sometimes more useful than the complicated mandrels since a perfect fit is not necessary for a specific size waveguide. An undersize mandrel extends into the waveguide beyond the tangent point. This type of mandrel provides greater support beyond the tangent of bend compared to other mandrels. Sharpness of bend and clearance between mandrel and inside of guide determine the tip placement.

4.4.1.4 Improper tooling and setting. Improper tooling and setting can result in flattening, wrinkling, or rupturing problems (see figures 10 and 11) as follows:

a. Tapering of mandrel by improper machining or through wear.

b. The clamp die may be causing slippage.

c. Insufficient pressure on the pressure die.

d. Mandrel improperly set.

e. Adjustment of wiper die differs in the same setup for various materials,

f. Wiper die is not as close as possible to the tangent point.

g. Wearing of bending form and the machine spindles. Where guide tolerances are difficult to maintain, or flattening and thinning must be rigidly controlled (see figure 12) because of “off-size” waveguide, different sizes of mandrels could solve the problem.

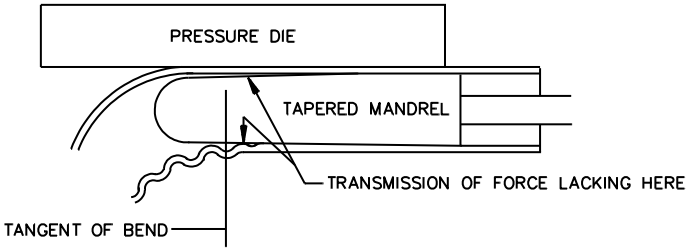

FIGURE 10. Wrinkling caused by tapered mandrel.

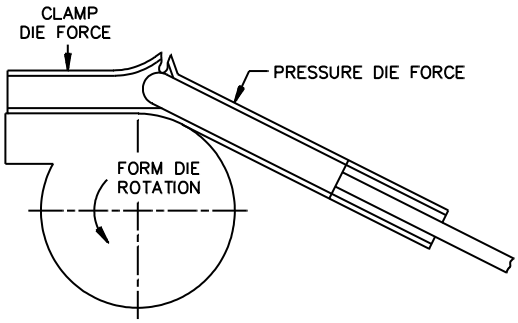

FIGURE 11. Mandrel setting too deep.

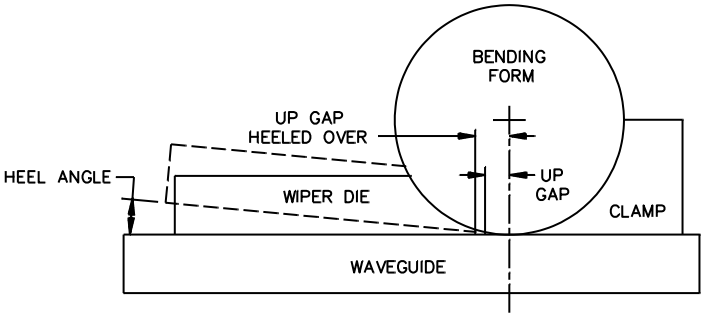

FIGURE 12. Inherent gap between tangent point and lip of wiper die.

If a plug mandrel cannot provide a good bend before rupture occurs, use a form type mandrel shaped for the curve of the bend. The plug and form mandrels do not provide sufficient support for the thin wall guide and sharp bends. The use of a ball mandrel is necessary to extend deeply into the bend (see figure 13). Formed mandrels may be used as a compromise between the expense of a ball mandrel and insufficient support of a plug mandrel.

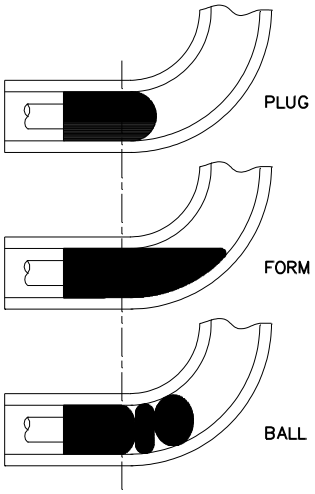

FIGURE 13. Depth of support of plug; form and ball mandrels.

4.4.1.5 Lubrication. Effective operation entails frequent lubrication of tools. Proper adjustment of tooling is impossible if slide wear is permitted. Lubrication of the guide and mandrel reduces galling of mandrel and frictional drag. Likewise, clamp slippage, guide flattening, and rupture can be prevented. Lubricating the wiper die decreases friction and wear on the die. Slippage can be caused by allowing the lubricant to penetrate into clamping areas. Different types of material require various lubricants.

4.4.1.6 Twisting and bending. Space saving that imposes design restrictions may result in contorted shapes of waveguides. Individual bends need not be separated by straight lengths, that is, bends could be positioned tangent to each other. If it is desired to have an H bend in one plane follow an E bend in the other plane, then a mandrel with two flexing modes or a universal mandrel is required. Production of various twists during bending results from the ability to adjust the form die to different forms. The electrical characteristics of the formed shapes are superior to those of assembled shapes.

4.4.1.7 Mandrel material and finish. Tool steel is used for bending copper, brass, and aluminum. The inside surface finish of the waveguide on bending depends on the type of mandrel finish. Since scoring or marking the inside surface of the waveguide is intolerable, a tool steel mandrel may be ground finish or chrome plated. Plating extends wear life and can be replaced without major rework of the original tool. Chromed mandrels should be replated when the chrome is worn away at any point to provide many more bends from the mandrel.

4.4.1.8 Polytetrafluoroethylene mandrel. Mandrels of polytetrafluoroethylene or fluorinated ethylene propylene (FEP) are used to support the walls of the waveguide during bending, thus eliminating the costly method of filling with rosin. It may be used for bending waveguide sizes of 3 by 1.5 inches and smaller.

a. The mandrels are made from a solid block of polytetrafluoroethylene or fluorinated ethylene propylene machined to the internal dimensions of the waveguide, minus .005 to minus .008. Tests have proved that the amount of clearance is critical in producing distortion-free bends. The leading edges of the mandrel are rounded slightly to aid in inserting it into the waveguide.

b. The length of each mandrel is governed by the longest bend normally made on the applicable size waveguide. At least an extra 6 inches (152.4 mm) is added to this dimension for ease of handling and to attach a device to withdraw the mandrel from the bent section.

c. Two methods of attaching the pulling gear are used. In the first, used on small size waveguide, a hole is drilled in the center of the wide plane of the mandrel, approximately 1 inch (25.4 mm) from the end, large enough to

receive a nut of the size suitable for the pulling rod. A second hole is drilled from the center of the end of the mandrel into the first hole to receive the pulling rod. The threaded pulling rod is inserted from the end of the mandrel and screwed into the nut placed in the first hole. The second method, used on larger size waveguides, is to undercut the mandrel about 3 inches (76.2 mm) along its length and rivet to it a fabricated metal clip to which a rod is attached.

d. The self-lubricating qualities of polytetrafluoroethylene or fluorinated ethylene propylene offer a low coefficient of friction which prevents seizing, galling, and binding. It is also non=hardening and readily compressed. These characteristics give the mandrels a long life expectancy. After 200 bends, mandrels in use have shown no appreciable change in dimensions or shape. Life expectancy is estimated to be approximately 500 bends before wear will affect use of the mandrel. When that point is reached, the mandrel can be remachined to the nearest smaller size practical. The new mandrel is used in bending operations as follows:

i. Cut waveguide tubing to size and file the edges smooth at the ends.

ii. Anneal tubing in the area to be bent.

iii. Acid clean the tubing.

iv. Inspect tubing to assure that it is clean and free of foreign matter or chips.

v. Insert the mandrel in waveguide tubing by pushing until the center of the mandrel is in the center of the bend area.

vi. Make the bend in the conventional (cold) manner.

vii. Clamp the bent tubing in a machinist's vise.

viii. Extract the mandrel from the bent tubing, using a small winch or puller hooked to the rod in the mandrel.

e. Bends of a smaller radius can be formed with less distortion by using a polytetrafluoroethylene mandrel. Time is reduced by 61 percent because this method eliminates waiting time for the rosin to solidify, steps required to melt and burn out rosin, and acid cleaning after rosin is burned out. It also eliminates damage to bent sections during melt out, as well as the potential fire hazard and noxious fumes caused by rosin.

f. Mandrels of polytetrafluoroethylene or fluorinated ethylene propylene offer a higher degree of accuracy and ease of handling than other types.

4.4.2 Wallace bending machine. The Wallace bending machine involves an extensive set-up time and can be used to advantage only where several sections of waveguide with the same type of bend are being manufactured. The advantage of using the Wallace bending machine is that the waveguide can be bent without using a filler inside the guide. The waveguide, however, must still be annealed on the portion that is to be bent. Some of the special forms that are used with the Wallace bending machine are shown in figures 14 through 18.

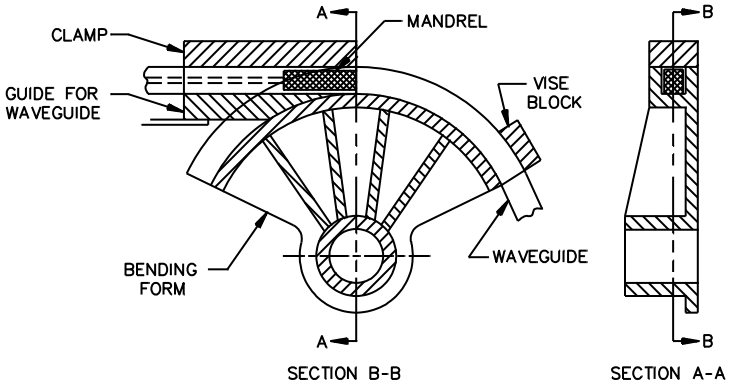

FIGURE 14. Details of bending forms for Wallace bending machine.

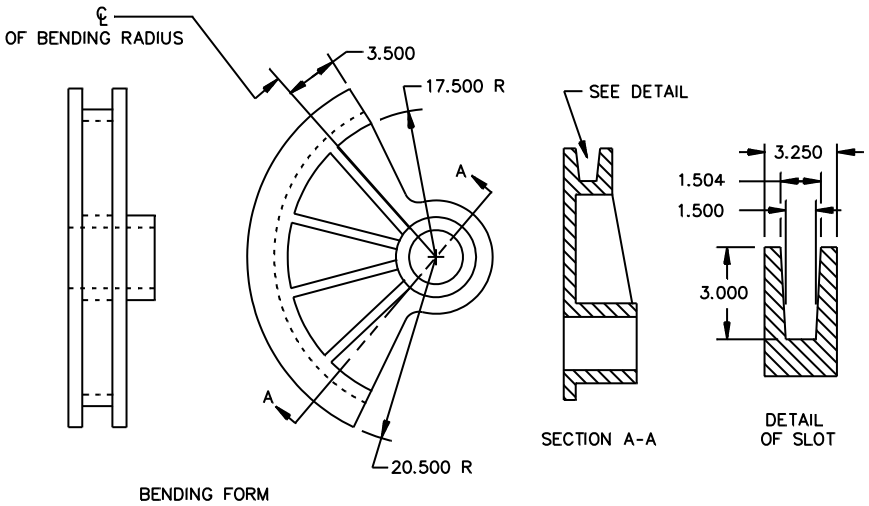

FIGURE 15. Bending forms for edgewise bend for 3 x 1.5 inch guide.

NOTE. Different size waveguide requires the appropriate size bending forms.

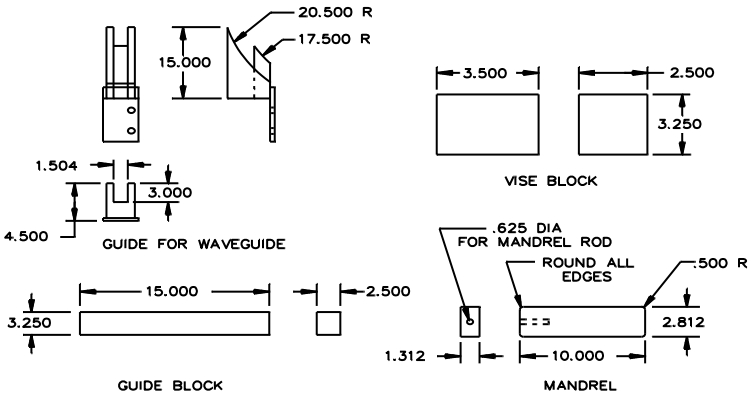

FIGURE 16. Detail of bending forms for edgewise bends for 3 x 1.5 inch guide.

NOTE. Different size waveguide requires the appropriate size bending forms.

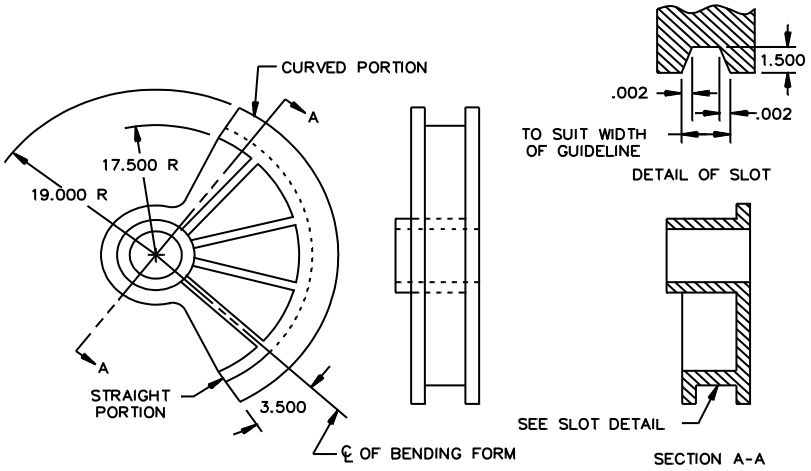

FIGURE 17. Bending form for sideways bend for 3 x 1.5 inch guide.

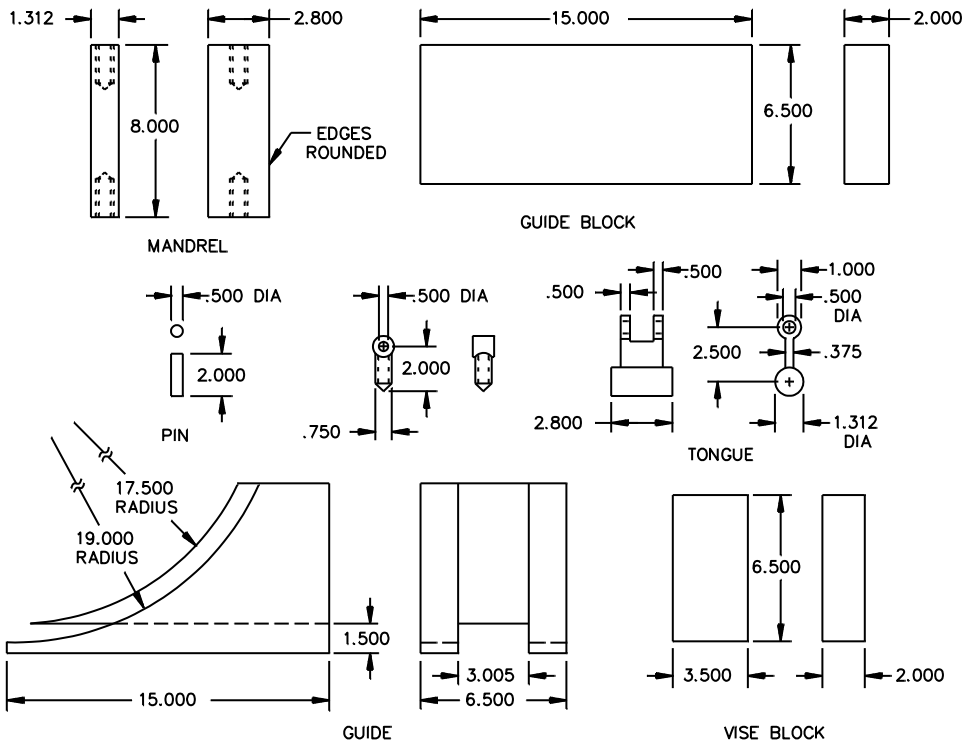

FIGURE 18. Detail of forms for sideways bend.

4.4.3 Hydraulic push press and portable hydraulic bender method. One disadvantage encountered in using this method is that the waveguide must be filled before bending. This disadvantage can be overcome if one of the flexible mandrels previously described is used; the polytetrafluoroethylene mandrel is especially suited for these types of benders. This is the preferred method for making bends of sharper radii and where no two bends are alike. It is also the most convenient to use at a forward area or advanced base. Another distinct disadvantage to this method (using a filler) is that puckers or wrinkles that usually form as a result of the bending operation must be removed. This is done by using a rolling machine or by hammering. A typical hydraulic bender and a simple hydraulic press is shown in figures 19 through 21. The procedure for using this method is as follows:

a. Anneal and fill the waveguide.

b. Insert the waveguide between two bending pins or dies (with suitable protection slabs in place). A bending form, curved to suit the desired radius of the waveguide, contacts the waveguide as the hydraulic hammer moves forward. For a desired 18-inch (45.72 cm) radius bend in the waveguide, the radius of the curve of the bending form should be 17.5 inches (44.45 cm). This compensates for the springback of the waveguide. A complete bend is formed by bending the waveguide in short sections along the radius distance. The bend will not be smooth but will have “puckers” or hills and valleys in the surface; these will have to be hammered out. Shift the points of the pressure of the ram. Force ram surface against the “puckers”.

c. A complete 18-inch (45.72 mm) radius, 90-degree bend can be made in the waveguide sideways (E plane as the throat and back) with one rosin filling; however, if the waveguide is bend edgewise (H plane as the back and throat), two rosin fillings are necessary.

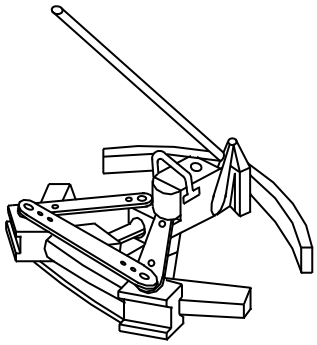

FIGURE 19. Greenlee hydraulic bender, model 775.

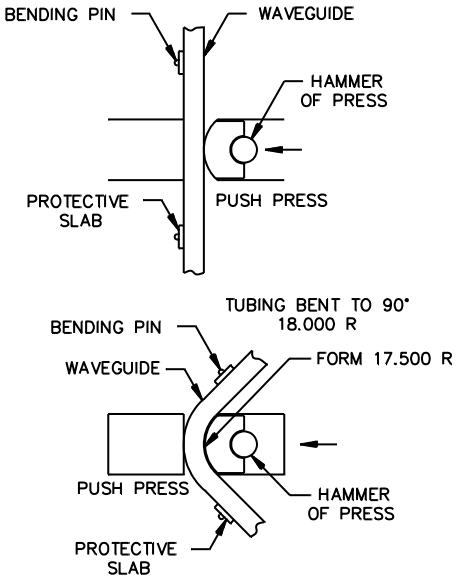

FIGURE 20. Bending waveguide in simple hydraulic press.

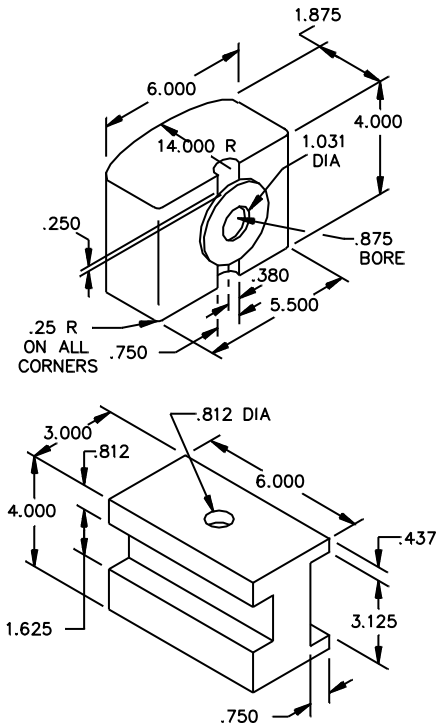

FIGURE 21. Waveguide dies used with Greenlee bender.

d. Bending the waveguide sideways. Bend the waveguide until it has the desired angle and a true radius. Hammer smooth the puckers in the throat of the bend with a properly shaped hammer. The radius olf the face of the hammer must be as nearly like the radius of the throat as is practically possible.

e. Bending the waveguide edgewise. Bend the waveguide approximately half way to the desired angle until visible distortions appear in the form of puckers in the throat and bulges in the side walls. Hammer smooth the puckers as explained before, and dress the walls by a 3.5 inch (88.9 mm) square-faced blacksmith's flatter with a suitable hammer supplying a proper blow. Another method is to insert the guide in a hand roller and roll the guide through several times with increasing pressure. After all distortion has been removed, remove the filler and re-anneal and refill the waveguide. Bend the waveguide again until it has the desired angle and a true radius. Remove the puckers in the throat as before. The increase in the thickness of the waveguide at the throat is reduced to normal by applying light blows to the flatter while it is being held firmly against the throat area of the side walls. The waveguide can be bent very satisfactorily with rosin to within 5 to 10 percent of the desired bend. This result may be obtained by a properly trained coppersmith using the previously described tools and methods.

4.4.4 Hand bending machine. If none of the previously described methods are available for bending the waveguide, it is possible to design a hand bending machine as shown in figure 22. This type of bending machine requires few parts and it is capable of making satisfactory bends in most cases, provided the operator uses sufficient time and care.

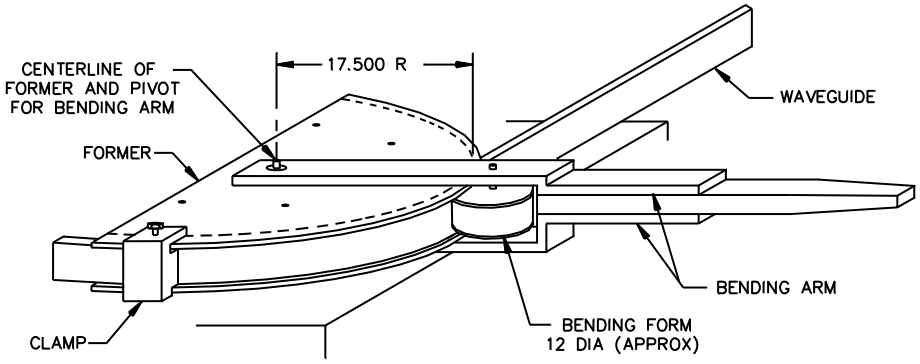

FIGURE 22. Waveguide hand bending tool.

4.4.5 Bench vise. A waveguide of small dimensions may be formed in a bench vise.

4.5 Twisting the waveguide. The twisting of the waveguide is accomplished by the use of equipment having the essential features as shown in figures 23 through 27. The method of twisting is as follows:

a. Anneal the waveguide along the portion of the length where the twist is to be made.

b. Plug the waveguide section at one end, fill it, allow it to cool, and then level it off at the top.

c. Insert the waveguide in the equipment as shown in figure 23 and twist it to the desired degree.

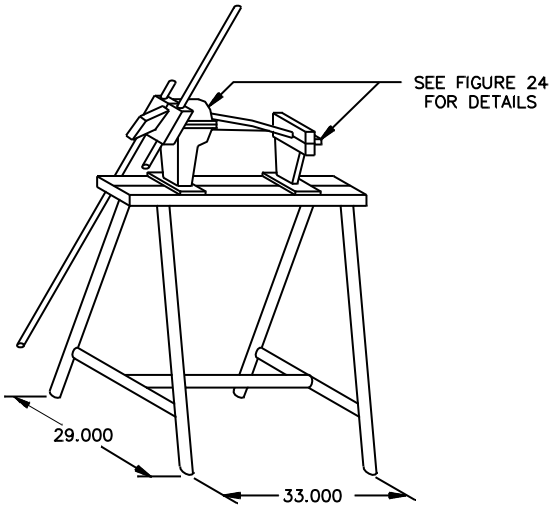

FIGURE 23. Twisting machine for waveguide.

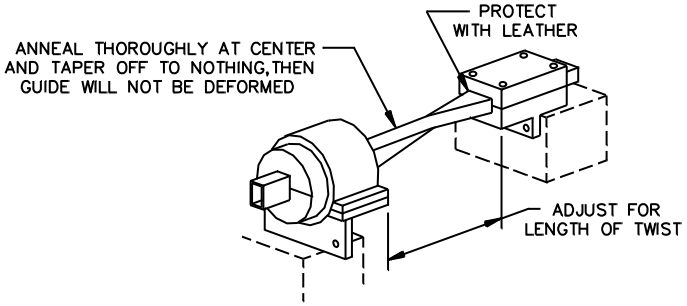

FIGURE 24. Twisting machine detail.

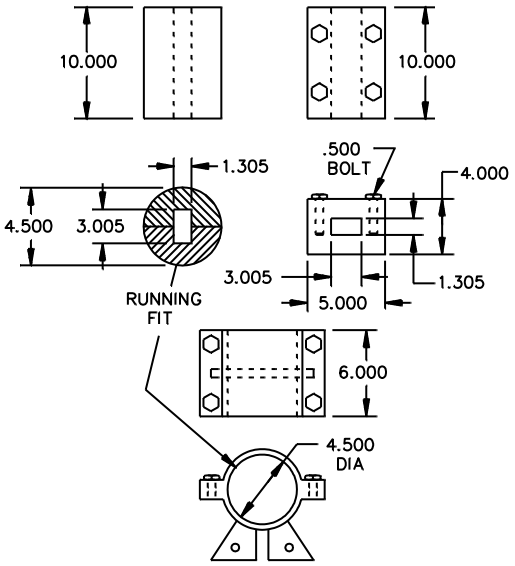

FIGURE 25. Cross section of clamps for 3 x 1.5 inch wavegide twisting machine.

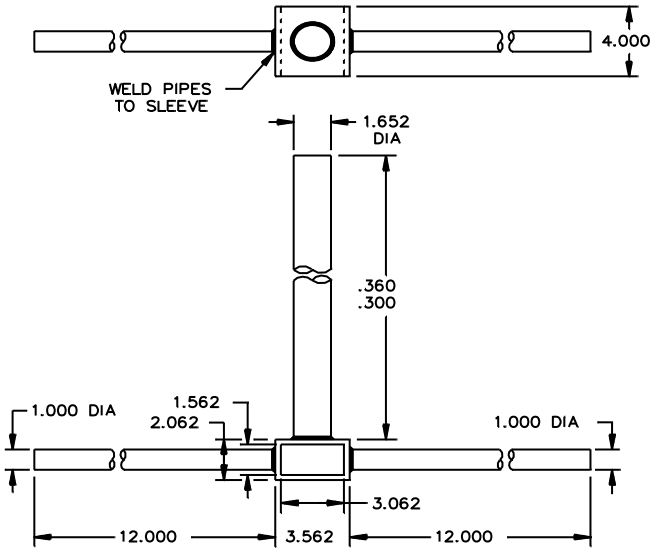

FIGURE 26. Waveguide twisting tool for 3 x 1.5 inch waveguide.

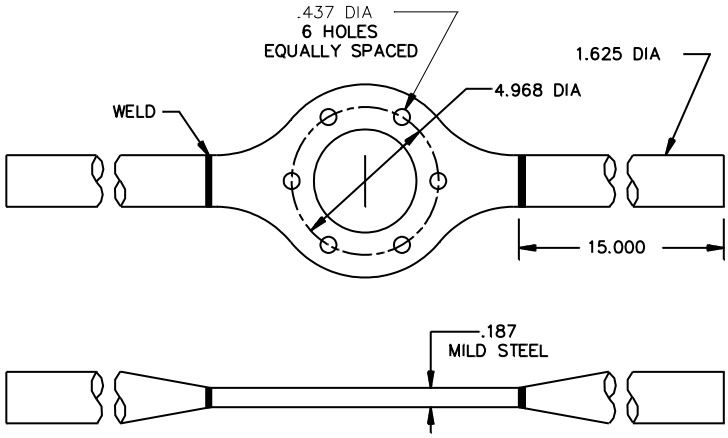

FIGURE 27. Tool for use with twisting machine.

5. DETAILED REQUIRMENTS (PRE-ASSEMBLY, ASSEMBLY, FINISHING OPERATIONS)

5.1 Removal of filling. If rosin is used for filling, dents and wrinkles should be removed while the filler is in the guide, but not otherwise. Use a flatting hammer with curvature corresponding to the shape being formed.

5.1.1 Alloy method. After bending and twisting, immerse the guide in a tank of hot water at 82°C to 93°C (180°F to 200°F), (corrosion-resisting steel tank preferred), and allow the alloy to run out. Do not use a torch. Tilt and shake the guide to remove the alloy as completely as possible. Plunge the emptied guide (while still hot) into cold water for 2 minutes to solidify any small drops of alloy retained in the oil film. To remove the oil film and remaining solid particles of alloy, flush the guide with a cold grease solvent (such as Oakite No. 23, or equivalent), then use a tight-fitting material and pull it through the guide.

5.1.2 Rosin method. Remove both plugs and tilt the guide, using a chain hoist if desired.

CAUTION: ALWAYS REMOVE BOTH PLUGS BEFORE MELTING OUT THE ROSIN

Using a torch adjusted for moderate heat, apply heat to the bottom end of the guide until the rosin begins to flow, then gradually raise the torch along the guide. After the guide is clear, direct the flame through the interior to remove remaining particles of rosin. It is not necessary to melt all the rosin. The tendency is for the surface of the rosin to melt, permitting chunks to slide out of the guide.

WARNING: NEVER APPLY HEAT TO THE MIDDLE OF A GUIDE THAT IS FILLED WITH ROSIN. AN EXPLOSION WILL RESULT.

5.2 Removal of dents and wrinkles from waveguide. Dents and wrinkles should be removed from the waveguide after the filler has been removed (if the filler is rosin, imperfections may be removed from the waveguide while the rosin is in place). Dents are removed from an empty guide as follows:

a. Seal the guide in the usual way at both ends and fit one end with a valve.

b. Fill the guide with air pressure of about 28 pounds per square inch (p.s.i.)

CAUTION: THE AIR PRESSURE MUST BE CLOSELY WATCHED AS PRESSURE EXCEEDING 30 P. S. I. WILL BULGE THE GUIDE.

c. Heat the area around the dent with a torch and remove the dent by means of a flatter. A blow torch should not be used on magnesium waveguide as magnesium material will support combustion after the ignition temperature has been reached.

5.3 Cutting. Cut the waveguide with a hacksaw or a powered metal cutting saw.

5.3.1 Hacksaw. For soft metal waveguides, use a fine tooth blade (10 to 14 teeth per inch). For copper or copper alloy, the guide can be cut with a blade having 20 to 24 teeth per inch.

5.3.2 Power saw. A recommended blade for cutting brass waveguide is the Simmonds T-11 steel blade, or equivalent. It is to be driven at approximately 1,200 revolutions per minute (r.p.m.).

5.3.3 Squareness of cut. The cut should be square and at right angles to the length of the guide. The edges must be filed or ground smooth so that the ends do not deviate from squareness by more than .031 (0.79 mm) of an inch. All fillings, chips, and other bits of metal must be removed from the guide before inserting the waveguide into the flange.

5.3.4 Modification of flanges and heavy wall waveguides for proper fit. There are two ways of modifying the pieces to assure proper fit.

5.3.4.1 Cover flange. Machine the heavy wall waveguide down to the size of the standard waveguide so that it will fit into a standard choke flange (see figure 28).

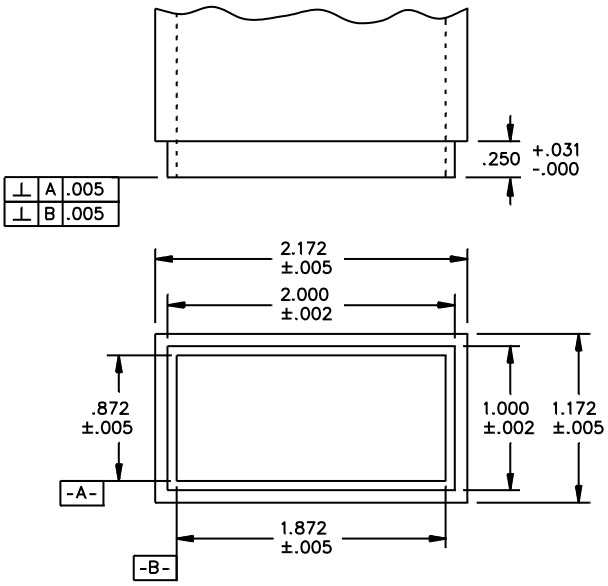

FIGURE 28. Modifying standard RG-95/U heavywall aluminum waveguide for use with standard UG-406 A/U choke flange.

5.3.4.2 Choke flange. Machine the alignment cutout of the choke flange to accept the heavy wall waveguide (see figure 29).

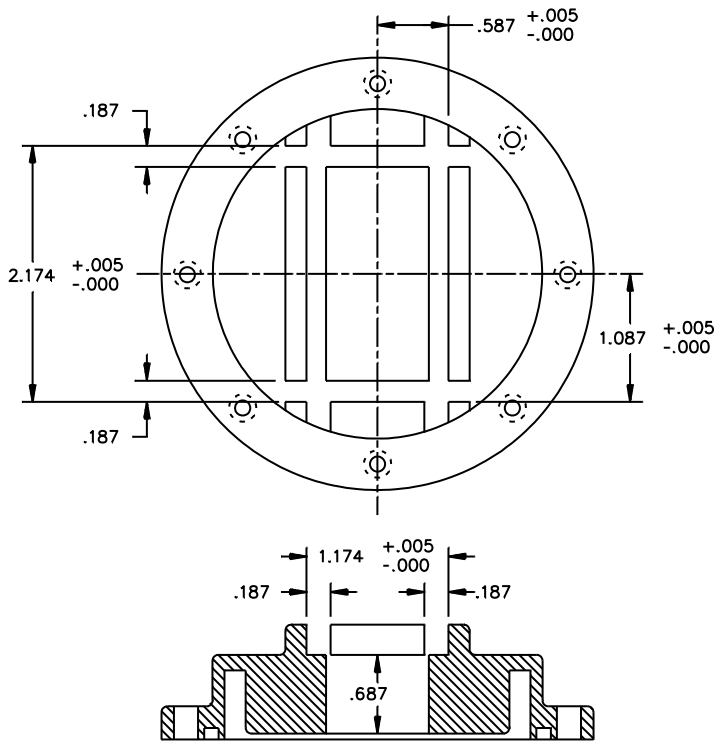

FIGURE 29. Modification of standard UG-406 A/U choke flange for use with standard RG-95/U heavywall aluminum waveguide.

5.4 Cleaning. Prior to brazing, cleaning is required to remove surface contaminants, such as grease, oil, oxide film, dust, and metal particles from the filler and the parts to be brazed. Best business practices should be used.

5.5 Attachment of flanges. The parts to be assembled should be thoroughly clean. Avoid the use of emery paper or crocus cloth to clean contact surface of the guide and the flange. Best business practices should be used. The flanges are then torch-brazed, silver-soldered, or dip brazed. A contact flange should not be used as a cover flange in a choke coupling; see MIL-DTL-3970 for the correct mating cover flange. Alignment of the waveguide and flange is important to minimize mismatch and reflection losses.

5.5.1 Assembly of contact or cover flange to waveguide. When installing contact or cover flanges to a waveguide, the following method should be used:

a. The surfaces to be brazed must be thoroughly clean (see 5.4).

b. For brazing brass flange to brass waveguide, apply silver solder flux over the surface areas to be joined (Handy and Harmon, or equal, flux thinned with water to the consistency of paste, free from lumps or type B brazing flux conforming to O-F-499). For brazing aluminum flange to aluminum waveguide, a flux that will produce maximum flow of filler metal is Alcoa No. 33, or equivalent.

WARNING: THE FLUX IS POISONOUS. AVOID INHALING.

c. Slide contact or cover flange over the guide to extend beyond the flat of the flange, allowing approximately .031 inch (0.79 mm) of waveguide to extend beyond the flat of the flange on all sides. See figure 30 for attachment of through flange on waveguide.

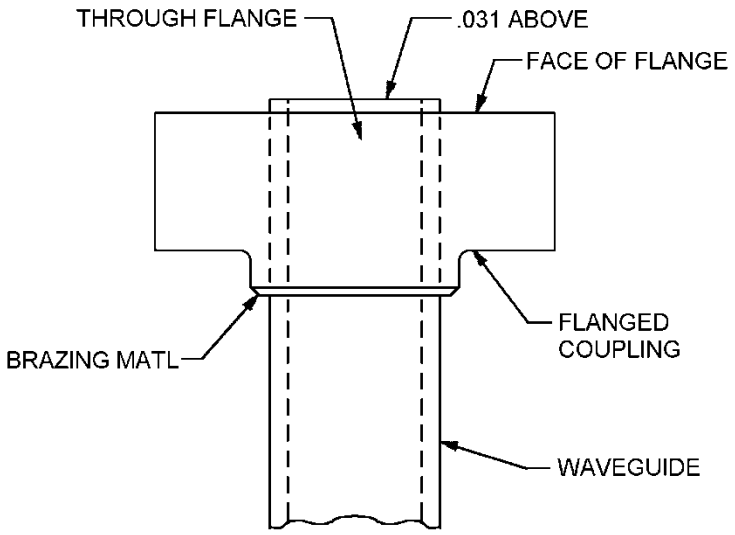

FIGURE 30. Through flange on waveguide.

d. The bore of the flange should be concentric with the waveguide bore to within .005 inch (0.13 mm) (see figure 31). The flange face should be perpendicular ± .5 degree to the edge and side planes of the internal surfaces of the waveguide (see figure 32).

5.5.2 Assembly of choke or socket flanges to waveguide. When installing choke or socket flanges to the waveguide, the following method should be used (see figure 33):

a. The surface to be brazed must be thoroughly clean (see 5.4).

b. Repeat 5.5.1b.

c. The waveguide must be square in all three planes to within ± .5 degree before assembly (see figure 34).

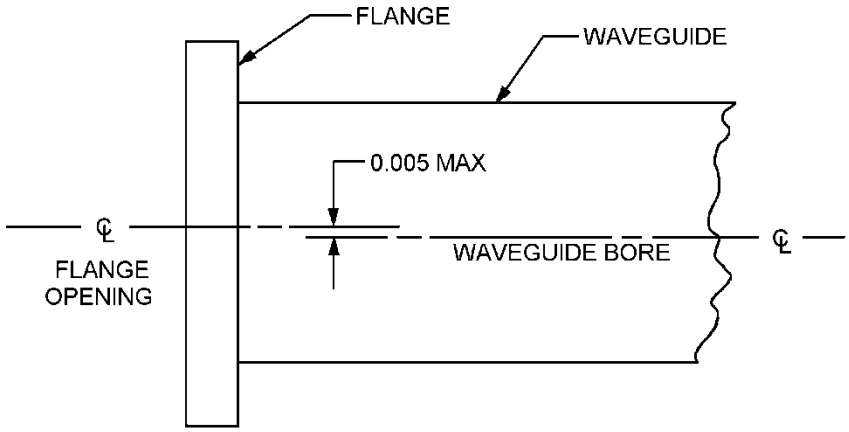

FIGURE 31. Concentricity of waveguide and flange.

d. The bore of the flange should be concentric with the waveguide bore to within .005 inch (0.13 mm) (see figure 31).

5.5.3 Clamps and jigs. (See figures 35 and 36).

5.6 Silver brazing brass waveguide. Brass waveguide assemblies should be brazed with a silver base alloy in accordance with QQ-B-654, grade IV or VI. After the parts to be brazed are properly clamped and fluxed, start preheating. A soft brush type flame (torch tip No. 6) should be used. Spread the flames of the air-acetylene torch as large as possible for heating evenly. However, if oxyacetylene is used, there should be a sharply defined inner cone. Exercise extreme care in handling the waveguide while soldering to prevent buckling.

CAUTION: DO NOT USE SOLDER ON THE FACE OF THE FLANGE. SOFT SOLDER OXIDIZES WITH AGE AND MAY CAUSE A HIGH RESISTANCE JOINT.

WARNING: CONTAINS CADMIUM. BRAZING HEAT CAN PRODUCE TOXIC FUMES. USE BEST BUSINESS PRACTICES FOR PROPER VENTILATION AND HEALTH ISSUES.

Apply heat to the flat surface of the flange as shown in figures 37 and 38. If oxyacetylene is used, the flame must be applied with the inner cone a few inches off the work. Heat the assembly sufficiently to melt the silver solder. Apply the silver solder to the surfaces to be brazed (refer to figures 36 and 37). For a good joint, the liquefied solder must flow thoroughly and evenly between the guide and flange. Maintain adequate heat to melt the silver solder without applying the torch to the joint or solder. Insufficient heat results in a weak joint and overheating burns the flux, warps the flange and causes oxidation. The guide and flange should be cooled in air without the use of forced cooling. Very carefully grind, file, or sandpaper flat flange and waveguide ends to a smooth surface approximately 63 microinches root mean square (rms).

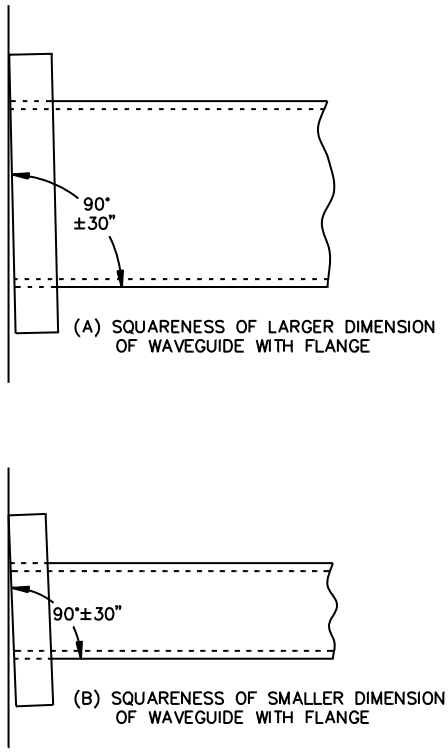

FIGURE 32. Squareness of flange face with waveguide.

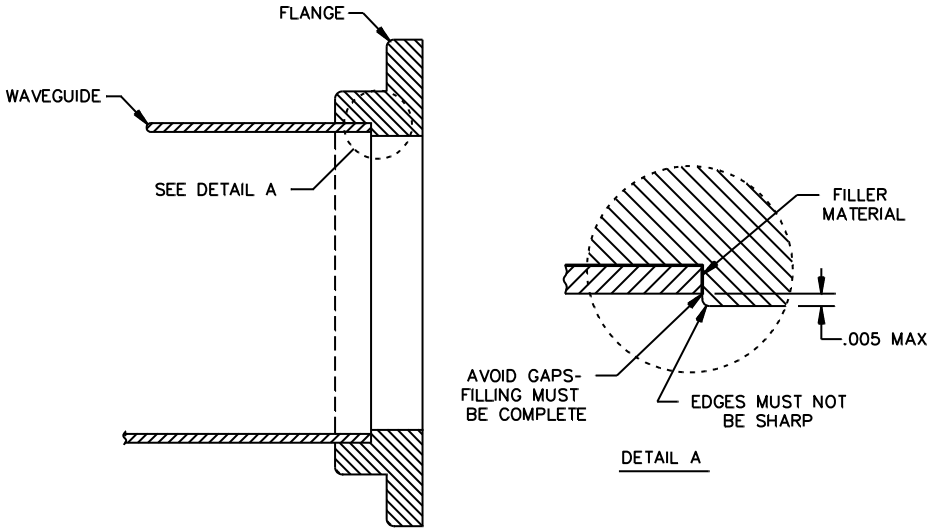

FIGURE 33. Waveguide and flange assembly-butt design.

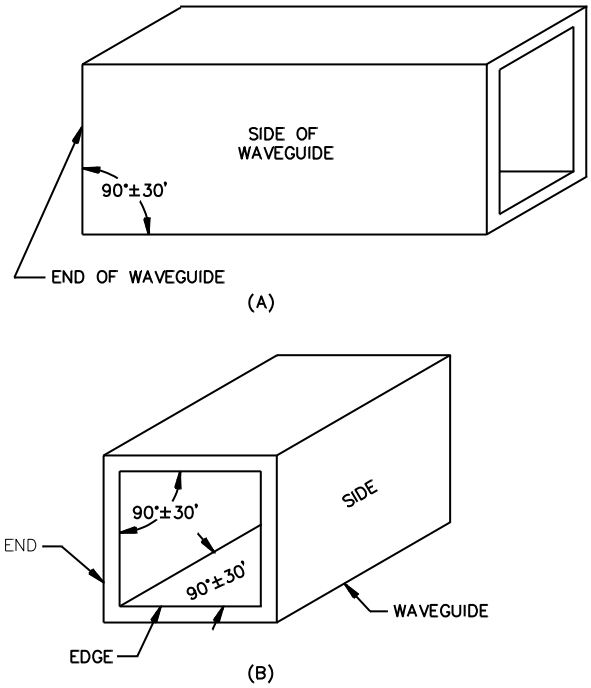

FIGURE 34. Waveguide squareness.

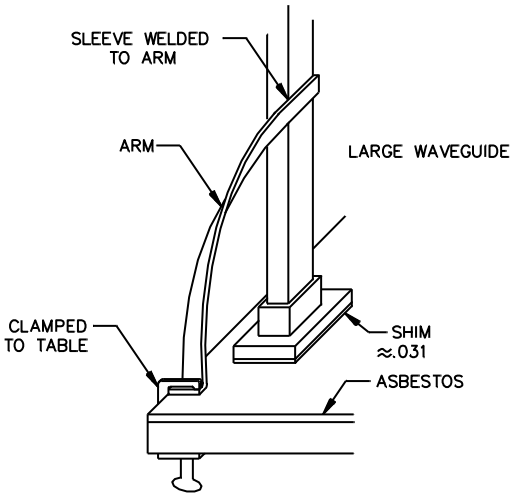

FIGURE 35. Torch brazing.

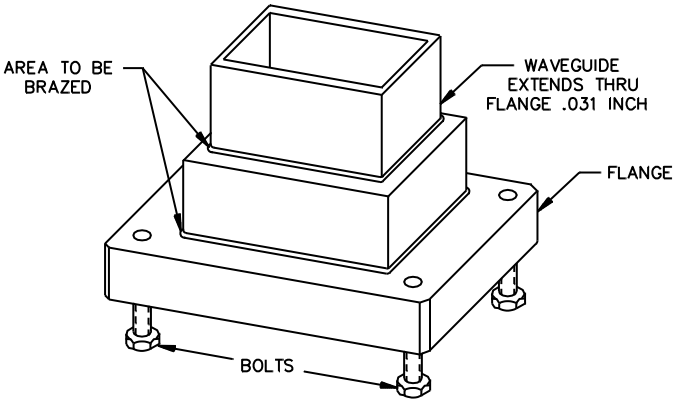

FIGURE 36. Jig for through flange.

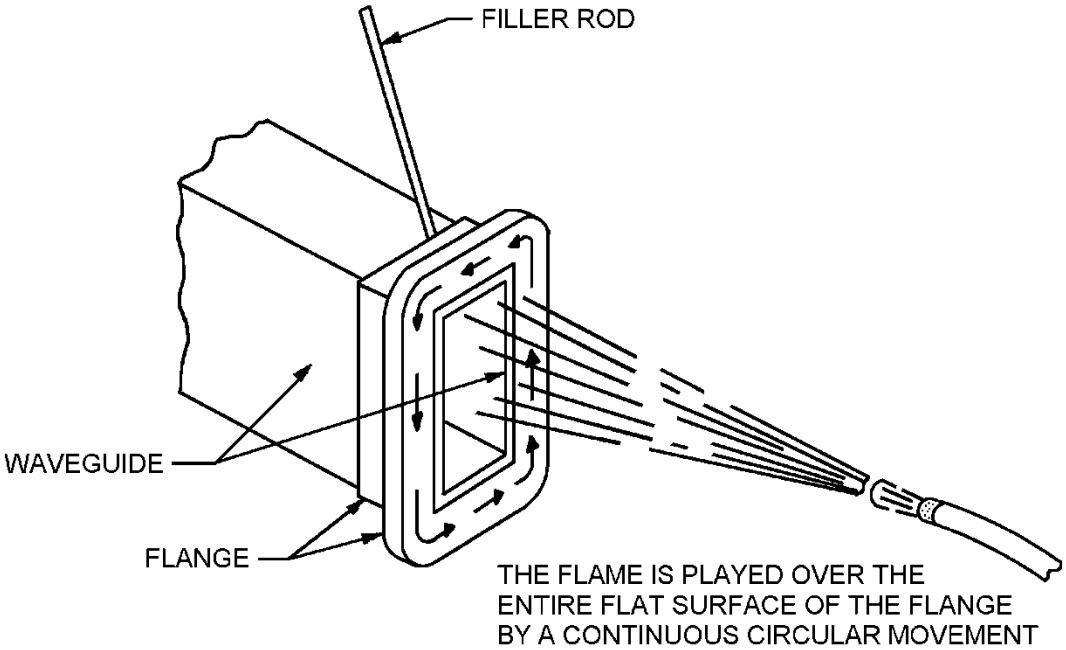

FIGURE 37. Silver soldering waveguide and flange-sleeve design.

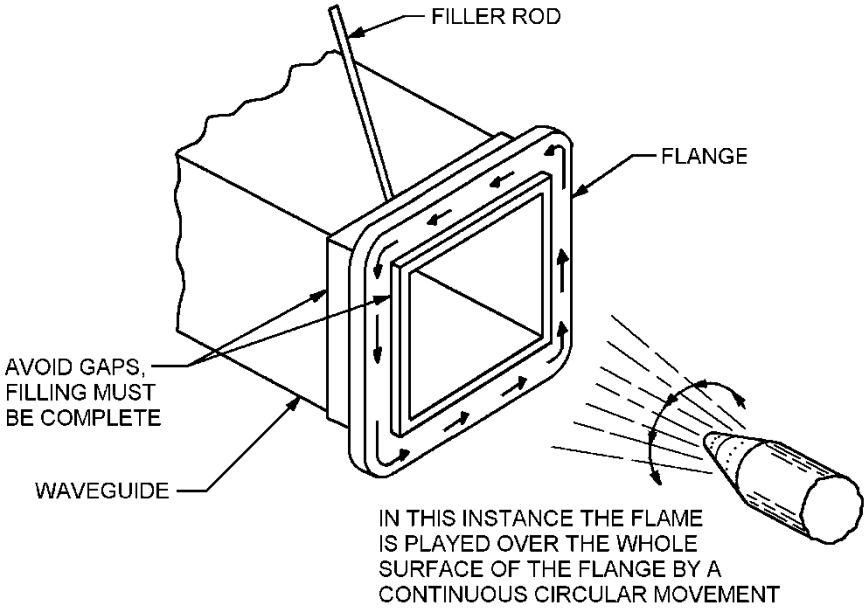

FIGURE 38. Directing flame on contact or cover flange.

5.7 Brazing flanges on aluminum waveguide. The basic equipment and methods required for brazing aluminum flanges on aluminum waveguide are described below.

5.7.1 Torch tips (numbers 1 to 5). The use of various size torch tips are determined by the thickness and size of the area to be brazed. The tips vary according to the size of their openings. The No. 3 tip is suggested for waveguide brazing.

5.7.2 Brazing rod. The main requirement for a good brazing alloy is that it melts at a low temperature to provide a practicable brazing range. Specifically recommended is BAlSi-4 as specified in AWS-A5.8 or Alcoa No. 716, or equal brazing rod, .0625 inch (1.5875 mm) thick - brazing range 512°C to 595°C (970°F to 1085°F).

5.7.3 Brazing. Place the guide upright with the prepared end to be soldered on the bottom. Insert the waveguide through the flange so that .031 inch (0.79 mm) of guide extends beyond the face of the flange, preventing the solder from entering the guide. A suitable jig, such as four bolts threaded into the flange (see figure 36), can be used to keep the flange from its flat surface. After the parts to be brazed are properly damped or supported, apply the flux to the areas to be brazed and to several inches of the brazing rod. Use a No. 3 torch tip and adjust for "reducing" flame (oxygen starved flux). Apply heat to the parts to be brazed, keeping the torch in constant motion at all times for an even distribution of heat for proper fusion. When the flux dissolves into a liquid and becomes transparent, apply the brazing rod to the area to be brazed. The rod applied at one point only will flow around and seal the joint if the heat is properly distributed (see figure 39). Do not allow the flame to concentrate on one spot as it may burn the flux or melt the bare metal. Once the filled metal has started to flow into the joint, the heat should not be increased. After the joint has cooled, all traces of the flux should be removed to prevent corrosion of the parts.

5.8 Dip brazing of aluminum waveguide.

5.8.1 Brazing flux. A recommended dip brazing flux is Aluminum Brazing Salt Pack Type "D", produced by Park Chemical Co., or equivalent.

5.8.1.2 Preparation of parts.

5.8.1.2.1 Cleaning. The cleaning directions given in 5.4 are to be used.

5.8.1.2.2 Chemical dipping. Parts should be dipped and rinsed as follows:

a. Immerse parts in a nitric hydrofluoric acid solution maintained at room temperature for 30 to 60 seconds. The solution should be prepared as follows:

Quantity	Composition
1 gallon	58-62 percent HNO_3(39'5'Be')
half pint	48 percent HF (1 15 specific gravity)
9 gallons	water (room temperature)

b. Rinse in two cascade cold-water rinse tanks with running water and constant overflow. Fresh water supply to tank two with overflow to tank one. Rinse for 30 seconds min. in tank one and then tank two in that order. Do not rinse in hot water.

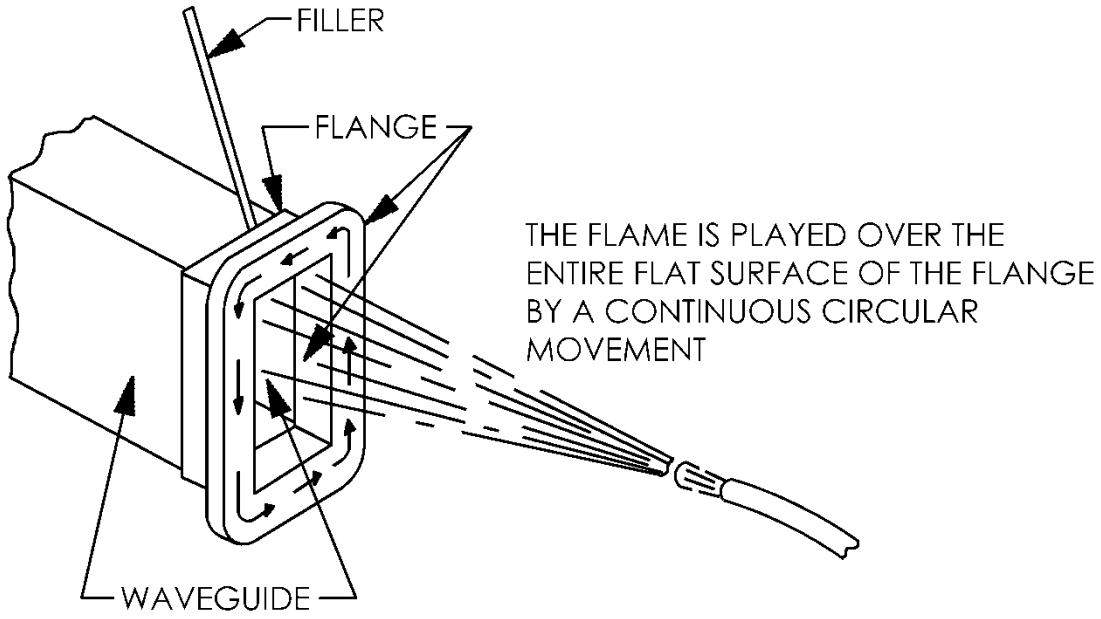

FIGURE 39. Brazing waveguide and flange-butt design.

5.8.2 Assembly. Parts should be assembled and a mandrel, of sufficient size to ensure precise alignment of waveguide to flange, should be inserted to the joint area and the flange inert gas-tack welded on two opposing corners of the waveguide prior to dip brazing. Heat resistant alloy wire, rod shims, jigs, clamps, or perforated baskets should be used to assemble the transmission line components for dip brazing.

5.8.2.1 Final cleaning. Parts should be cleaned with an additional soak for approximately 1 minute in a nitric hydrofluoric acid solution maintained at room temperature to remove all traces of flux particles (see 5.8.1.2.2a) and rinsed (see 5.8.1.2.2b).

5.9 Dry air piping connection. For waveguide sections requiring the addition of fittings for dry air pressurization and purging, see figure 40 for details of construction and location. The inside of the waveguide should be inspected following completion of fitting assembly; the surface should be smooth, free of burrs, and distortion.

5.9.1 Air connection completion. These air connections should be completed before final assembly of waveguide.

5.10. FINISHING OPERATION

5.10.1 Finishing operation. The finishing operation as required will be performed in the following order: machining, smoothing, cleaning, and sealing/painting.

5.10.1.1 Machining. Following brazing, machining, such as broaching may be necessary to obtain desired configuration.

5.10.1.2 Smoothing. The surface finish of the inside of the waveguide should be sanded smooth, if necessary, by carefully using fine emery paper or crocus cloth. The average interior surface roughness should be measured in accordance with ASME B46.1 and should conform to the specified requirement. Flaws should not be included in the surface roughness. When measured, as specified above, the average interior surface roughness of the waveguide should not exceed the values shown in table II, except the corner radius need not be included in the measurement.

5.10.2 Cleaning waveguide. When fabrication is completed, each waveguide section must be carefully cleaned (see 5.4).

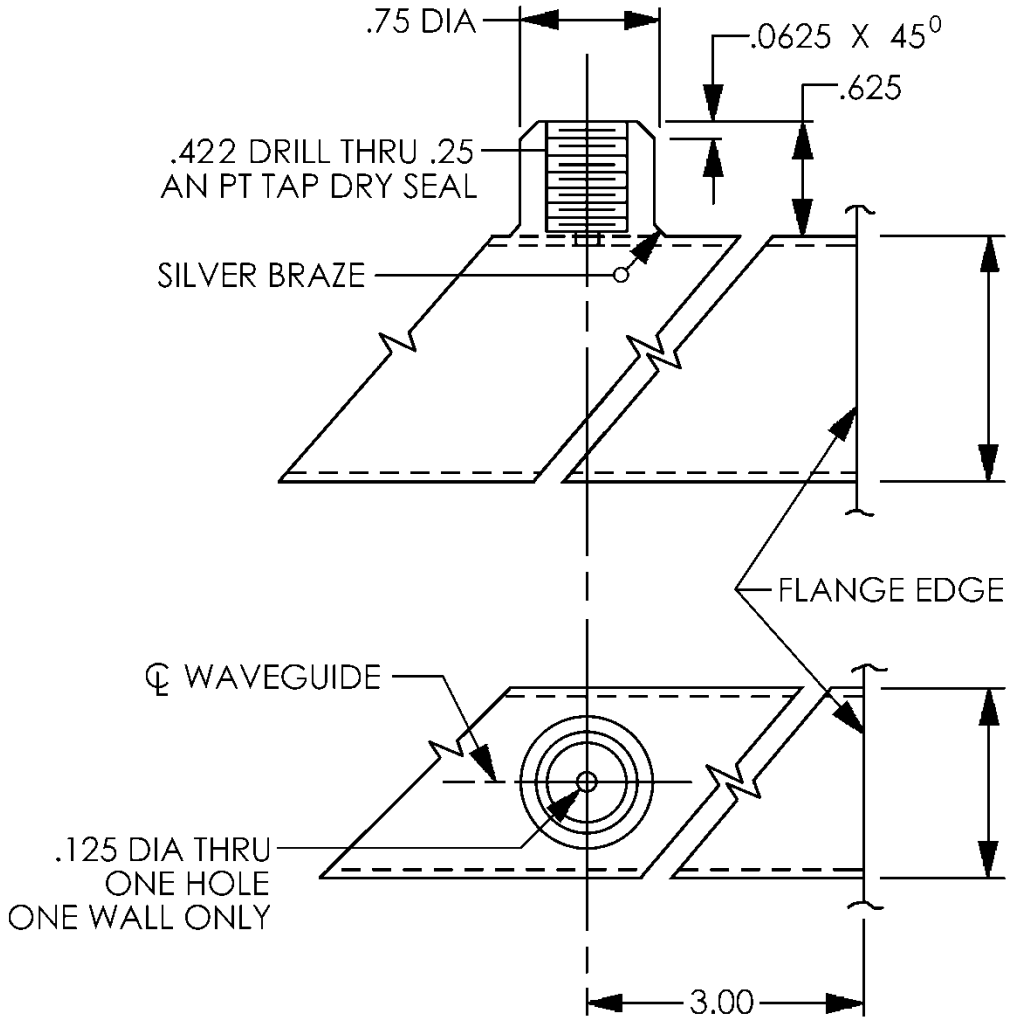

FIGURE 40. Fitting for air connection.

TABLE II. Surface roughness tolerances of waveguides.

Specified major inner dimensions (inches)	Allowable surface roughness, maximum arithmetic average (A. A.)	
	Aluminum, aluminum alloy, and magnesium alloy	Copper, copper alloy, silver alloy, silver lined copper, and silver lined copper alloy
Up to 4, exclusive - - - - - - - - - -	63	32
4 and over - - - - - - - - - - - - - - -	125	63

The flatness and surface finish on the flange surfaces at and near the junction with the interior of the waveguide wall should be the following:

a. The flatness should not deviate more than .002 inches per inch.

b. Surface finish should be as specified in table II.

6. NOTES

(This section contains information of a general or explanatory nature that may be helpful, but is not mandatory.)

6.1 Intended use. This handbook is intended for the electronic installations technician to be used as a guide for fabricating rectangular waveguide bends and twists used in the microwave region of the electronic spectrum

6.2 Subject term (key word) listing.
Annealing
Brazing
Mandrel
Polytetrafluoroethylene
Rosin Method

6.3 Changes from previous issue. Marginal notations are not used in this revision to identify changes with respect to the previous issue due to the extent of the changes.

Custodians:
Army - CR
Navy - EC
Air Force - 85
DLA - CC

Preparing activity:
DLA - CC

(Project 5985-2012-022)

NOTE: The activities listed above were interested in this document as of the date of this document. Since organizations and responsibilities can change, you should verify the currency of the information above using the ASSIST Online database at https://assist.dla.mil/.