INCH-POUND

MIL-DTL-83733E
w/AMENDMENT 4
31 May 2018
SUPERSEDING
MIL-DTL-83733E
w/AMENDMENT 3
5 September 2017

DETAIL SPECIFICATION

CONNECTORS, ELECTRICAL MINIATURE, RECTANGULAR TYPE, RACK TO PANEL, ENVIRONMENT RESISTING, 200°C TOTAL CONTINUOUS OPERATING TEMPERATURE, GENERAL SPECIFICATION FOR

This specification is approved for use by all Departments and Agencies of the Department of Defense.

1. SCOPE

1.1 Scope. This specification covers environment and fluid resisting, miniature, rectangular type, rack to panel electrical connectors (plugs and receptacles). These connectors utilize rear release, removable crimp type contacts and are capable of continuous operation from -65°C to +200°C (see 6.1).

1.2.1 Part or Identifying Number (PIN). Unless otherwise specified (see 3.1), the PIN should consist of the letter "M" and the basic number of the specification sheet; the letters for the class and shell size; and the number of the insert arrangement, as shown in the following example:

M83733/1 R B 101

Military designator and specification sheet number

Class: R (environment resisting)
S (space environment applications)

Shell size: A or B

Insert arrangement: See MIL-STD-1531 (shell size A)
MIL-STD-1532 (shell size B)

2. APPLICABLE DOCUMENTS

2.1 General. The documents listed in this section are specified in sections 3 and 4 of this specification. This section does not include documents cited in other sections of this specification or recommended for additional information or as examples. While every effort has been made to ensure the completeness of this list, document users are cautioned that they must meet all specified requirements cited in sections 3 and 4 of this standard, whether or not they are listed.

Comments, suggestions, or questions on this document should be addressed to: DLA Land and Maritime, ATTN: VAI, P.O. Box 3990, Columbus, OH 43218-3990 or email: RectangularConnector@dla.mil. Since contact information can change, you may want to verify the currency of this address information using the ASSIST Online database at https://assist.dla.mil.

AMSC FSC 5935

2.2 Government documents.

2.2.1 Specifications, standards, and handbooks. The following specifications, standards, and handbooks form a part of this document to the extent specified herein. Unless otherwise specified, the issues of these documents are those cited in the solicitation or contract.

FEDERAL STANDARDS

FED-STD-H28 - Screw-Thread Standards for Federal Service

DEPARTMENT OF DEFENSE SPECIFICATIONS

MIL-DTL-5624 - Turbine Fuel, Aviation, Grades JP-4, JP-5

MIL-PRF-87257 - Hydraulic Fluid, Fire Resistant: Low Temperature, Synthetic Hydrocarbon Base, Aircraft and Missile

(See supplement 1 for list of specification sheets.)

DEPARTMENT OF DEFENSE STANDARDS

MIL-STD-202 - Test Method for Electronic and Electrical Component Parts
MIL-STD-790 - Standard Practice for Established reliability and High reliability Qualified Products List (QPL) Systems for Electrical, Electronic, and Fiber Optic Parts Specification
MIL-STD-889 - Dissimilar Metals
MIL-STD-1285 - Marking of Electrical and Electronic Parts
MIL-STD-1531 - Insert arrangements for MIL-DTL-83733 Rack to Panel Connectors, Shell Size A
MIL-STD-1532 - Insert arrangements for MIL-DTL-83733 Rack to Panel Connectors, Shell Size B
MS3461 - Test Gage, MIL-DTL-26482 Series 2 or SAE AS81703 Series 3 Contact Retention Feature

(Copies of these documents are available online at http://quicksearch.dla.mil/.)

2.2.2 Other Government documents, drawings, and publications. The following other Government documents, drawings, and publications form a part of this document to the extent specified herein. Unless otherwise specified, the issues of these documents are those cited in the solicitation or contract.

NATIONAL AERONAUTICS AND SPACE ADMINISTRATION (NASA)

NHB 8060.1 - Office of Safety and Mission Flammability, Odor and Offgassing Requirements and Test procedures for Materials in Environment that Support Combustion.

(Copies of these documents are available online at http://www.nasa.gov/centers/johnson/home/.)

2.3 Non-Government publications. The following documents form a part of this document to the extent specified herein. Unless otherwise specified, the issues of these documents are those cited in the solicitation or contract.

ASTM INTERNATIONAL

ASTM A342/A342M - Materials, Feebly Magnetic, Permeability of, Standards Test Methods for

ASTM B85/B85M	-	Aluminum-Alloy Die Castings
ASTM B209	-	Standard Specification, Aluminum and Aluminum-Alloy Sheet and Plate for
ASTM E595	-	Total Mass Loss and Collected Volatile Condensable Materials from Outgassing in a Vacuum Environment, Standard test Method for

(Copies of these documents are available from www.astm.org.)

ELECTRONIC COMPONENTS INDUSTRY ASSOCIATION (ECIA)

EIA-364	-	Electrical Connector/Socket Test Procedures Including Environmental Classifications
EIA-364-03	-	Altitude Immersion Test Procedure for Electrical Connectors
EIA-364-05	-	Contact Insertion, Release and Removal Force Test Procedure for Electrical Connectors
EIA-364-06	-	Contact Resistance Test Procedure for Electrical Connectors
EIA-364-10	-	Fluid Immersion Test Procedure for Electrical Connectors
EIA-364-13	-	Mating and Unmating Forces Test Procedure for Electrical Connectors and Sockets
EIA-364-14	-	Ozone Exposure Test Procedure for Electrical Connectors
EIA-364-17	-	Temperature Life with or without Electrical Load Test Procedure for Electrical Connectors and Sockets
EIA-364-20	-	Withstanding Voltage Test Procedure for Electrical Connectors, Sockets and Coaxial Contacts
EIA-364-21	-	Insulation Resistance Test Procedure for Electrical Connectors, Sockets, and Coaxial Contacts
EIA-364-26	-	Salt Spray Test Procedure for Electrical Connectors, Contacts and Sockets
EIA-364-27	-	Mechanical Shock (Specified Pulse) Test Procedure for Electrical Connectors
EIA-364-28	-	Vibration Test Procedure for Electrical Connectors and Sockets
EIA-364-29	-	Contact Retention Test Procedure for Electrical Connectors
EIA-364-31	-	Humidity Test Procedure for Electrical Connectors and Sockets
EIA-364-32	-	Thermal Shock (Temperature Cycling) Test Procedure for Electrical Connectors and Sockets
EIA-364-35	-	Insert Retention Test Procedure for Electrical Connectors

(Copies of these documents are available online at http://www.ecianow.org.)

NCSL INTERNATIONAL

NCSL-Z540.3 - Requirements for the Calibration of Measuring and Test Equipment

(Copies of these documents are available online at http://www.ncsli.org.)

SAE INTERNATIONAL

SAE AMS2404	-	Nickel, Electroless, Plating
SAE AMS4027	-	Aluminum Alloy, Sheet and Plate 1.0Mg – 0.60Si – 0.2Cr (6061; - T6 Sheet, -T651 Plate) Solution and Precipitation Heat Treated
SAE AMS4290	-	Aluminum Alloy, Die Castings 9.5Si-0.5Mg (360.0-F) As Cast
SAE AMS4291	-	Aluminum Alloy, Die Castings 8.5Si-3.5Cu (A380.0-F) As Cast

SAE AS39029/4	-	Contacts, Electrical Connector, Pin, Crimp Removable (For MIL-DTL-26482 Series 2, SAE AS81703 Series 3, MIL-DTL-83723 Series I and III, MIL-DTL-83733 Connectors)
SAE AS39029/5	-	Contacts, Electrical Connector, Socket, Crimp Removable (For MIL-DTL-26482 Series 2, SAE AS81703 Series 3, MIL-DTL-83723 Series I and III, MIL-DTL-83733 Connectors and MIL-DTL-12883/40 and /41 Relay Sockets)
SAE AS39029/9	-	Contacts, Electrical Connector, Pin, Crimp Removable, Thermocouple, (For MIL-DTL-26482 Series 2, SAE AS81703 Series 3, MIL-DTL-83723 Series I and III, and MIL-DTL-83733 Connectors)
SAE AS39029/10	-	Contacts, Electrical Connector, Socket, Crimp Removable, Thermocouple, (For MIL-DTL-26482 Series 2, SAE AS81703 Series 3, MIL-DTL-83723 Series I and III, and MIL-DTL-83733 Connectors)
SAE AS39029/50	-	Contacts Electrical Connector, Pin, Crimp Removable, Shielded, (For MIL-DTL-83733 Connectors)
SAE AS39029/51	-	Contacts Electrical Connector, Socket, Shielded, (For MIL-DTL-83733 Connectors)
SAE AS39029/57	-	Contacts, Electrical Connector, Socket, Crimp Removable, (For MIL-DTL-24308, MIL-DTL-38999 Series II, MIL-DTL-55302/68, /71, /72, /75, and MIL-DTL-83733 Connectors)
SAE AS39029/58	-	Contacts, Electrical Connector, Pin, Crimp Removable, (For MIL-DTL-24038, MIL-DTL-38999 Series I, II, III, and IV, MIL-DTL-55302/69, and MIL-DTL-83733 Connectors)
SAE AS39029/71	-	Contacts, Electrical Connector, Pin, Removable, Solderless Wrap-Post Termination (for MIL-DTL-38999 series I, II, III and IV, MIL-DTL-24038, MIL-DTL-83733, and MIL-DTL-55302/69 Connectors)
SAE AS39029/72	-	Contacts, Electrical Connector, Socket, Removable, Solderless Wrap-Post Termination (for MIL-DTL-38999 Series I, II, III, and IV, MIL-DTL-24038, MIL-DTL-55302/68, /71, and /75 Connectors)
SAE AS81969/8	-	Installing and Removal Tools, Connector Electrical Contact, Type I and II, Class 2, Composition A
SAE AS81969/14	-	Installing and Removal Tools, Connector Electrical Contact, Type III, Class 2, Composition B

(Copies of these documents are available online at www.sae.org.)

INTERNATIONAL ORGANIZATION FOR STANDARDIZATION (ISO)

ISO-10012	-	Measurement Management Systems – Requirements for Measurement Process and Measuring Equipment

(Copies of these documents are available online at www.ansi.org.)

2.4 Order of precedence. Unless otherwise noted herein or in the contract, in the event of a conflict between the text of this document and the references cited herein (except for related specification sheets), the text of this document takes precedence. Nothing in this document, however, supersedes applicable laws and regulations unless a specific exemption has been obtained.

3. REQUIREMENTS

3.1 Specification sheets. The individual item requirements shall be as specified herein and in

accordance with the applicable specification sheet. In the event of any conflict between the requirements of this specification and the specification sheet, the latter shall govern.

3.2 Qualification. Connectors furnished under this specification shall be products that are authorized by the qualifying activity for listing on the applicable qualified products list before contract award (see 4.4 and 6.3).

3.2.1 Reliability. The contractors' reliability program for assembled connectors and assembly procedures shall meet the requirements of MIL-STD-790.

3.3 Materials. Reference materials are identified herein (see 6.3). When an example reference material is not identified, a material shall be used which will enable the connectors and accessories to meet the performance requirements of this specification. Acceptance or approval of a constituent material shall not be construed as a guaranty of acceptance of the finished product.

3.3.1 Reference materials, plating, and processes. The identified material, plating, and processes have been established to provide assurances that connectors manufactured to this specification will properly interface to similar industry standard or government specified connector systems. Alternate materials, with approval of the qualifying activity, may be used as long as the alternate material(s) will not cause problems of electrochemical contamination or generation of excessive interface surface wear (see 6.3). The manufacturer of connectors supplied to this specification is allowed to use alternate materials, plating, and processes from those identified in 3.3 of this specification. Alternate materials, plating and processes must be coordinated with the qualifying activity as part of the qualification process. Use of alternates shall not result in inferior short or long term performance or reliability of connectors when compared to connectors manufactured to the detailed requirements of this specification. Short or long term failures or reliability problems due to use of these alternates shall be the responsibility of the supplier.

3.3.2 Recycled, recovered, environmentally preferable, or biobased materials. Recycled, recovered, environmentally preferable materials should be used to the maximum extent possible provided that the material meets or exceeds the operational and maintenance requirements, and promotes economically advantageous life cycle costs.

3.3.3 Nonmagnetic materials. All parts, with the exception of screws, washers, and mounting hardware, shall be made from materials which are classified as nonmagnetic, and the permeability of the basic connector shall be of 2.0 μ or less. The permeability shall be checked by the instrument described in ASTM A342/A342M or equivalent.

3.3.3.1 Class S nonmagnetic materials. All nonmetallic materials for class S connectors shall meet the outgassing, flammability, odor, and toxicity requirements see 3.6.24 and 3.6.25. Materials capable of emitting vacuum condensable gases-conductive, noxious or toxic gasses when exposed to low pressure or high temperature shall not be used.

3.3.4 Dissimilar metals. When dissimilar metals are used in intimate contact with each other, protection against electrolysis and corrosion shall be provided as specified in MIL-STD-889.

3.3.5 Shells. The shells for classes R and S connectors shall be of high grade aluminum die casting alloy in accordance with ASTM B85/B85M, SAE AMS4290, and SAE AMS4291 or high grade aluminum alloy in accordance with SAE AMS4027 or ASTM B209.

3.4 Finishes.

3.4.1 Finish for class R connectors. Aluminum parts shall be electroless nickel plated in accordance with SAE AMS2404, class 3 or 4, with .001 (24.5 μm) inch minimum plating thickness. All other metal parts shall be made of corrosion-resistant materials or shall be protected to meet the performance requirements of this specification.

3.4.2 Finish for class S connectors. All aluminum parts for class S connectors shall be electroless nickel plated in accordance with SAE AMS2404, class 3 or 4, 500 microinches (12700 μm) thick minimum. Finish shall be dull. Use of a suitable underplate is permissible. A silver underplate shall not be used.

3.5 Design and construction. Connectors shall be in accordance with the applicable specification sheet and shall be constructed to withstand normal handling incident to installation and maintenance in service. Mating and back-end configuration and dimensions to insure intermateability shall be specified on figure 1 and figure 2.

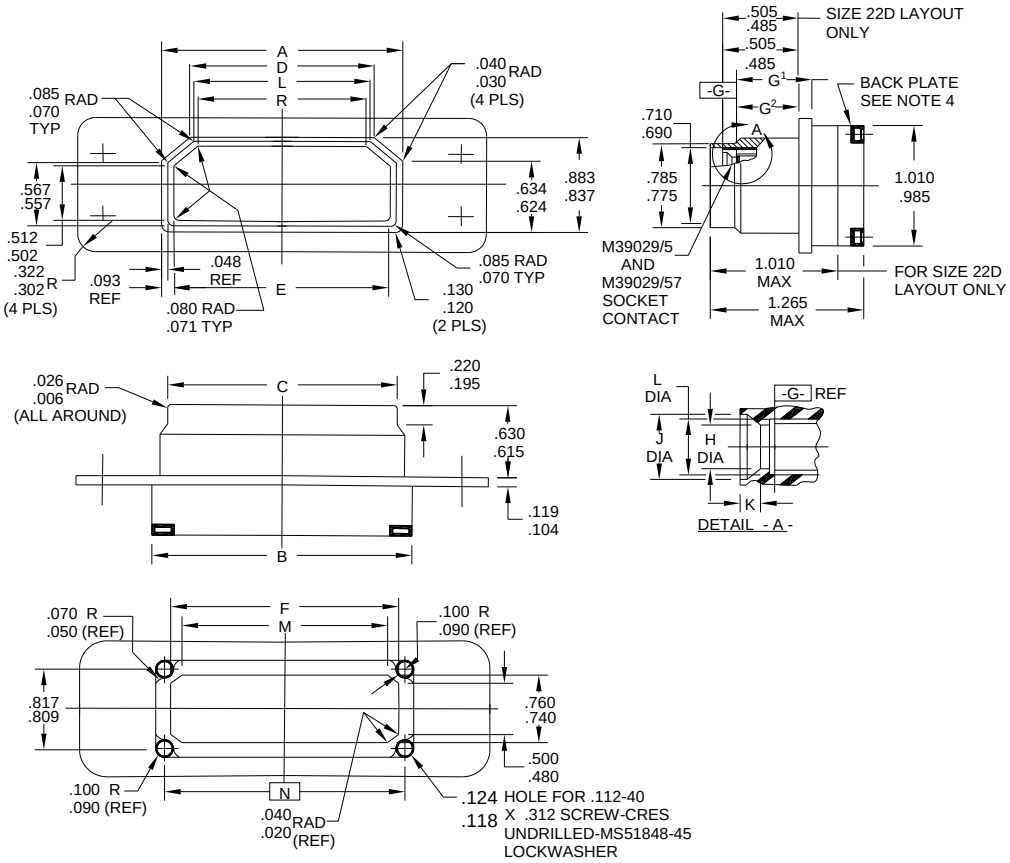

FIGURE 1. Connector, plug, interface and backend dimensions.

Inches	mm	Inches	mm	Inches	mm	Inches	mm	Inches	mm
.006	0.15	.090	2.29	.220	5.59	.512	13.00	.760	19.30
.020	0.51	.093	2.36	.302	7.67	.557	14.15	.775	19.69
.026	0.66	.100	2.54	.322	8.18	.567	14.40	.785	19.94
.030	0.76	.104	2.64	.480	12.19	.615	15.62	.809	20.55
.040	1.02	.118	3.00	.485	12.32	.624	15.85	.817	20.75
.048	1.22	.119	3.02	.490	12.45	.630	16.00	.873	22.17
.050	1.27	.120	3.05	.500	12.70	.634	16.10	.883	22.43
.070	1.78	.124	3.15	.502	12.75	.690	17.53	.985	25.02
.080	2.03	.130	3.30	.505	12.83	.710	18.03	1.010	25.65
.085	2.16	.195	4.95	.510	12.95	.740	18.80	1.265	32.13

Interface and backend dimensions.

Shell size	A (mm)	B (mm)	C (mm)	D (mm)	E (mm)	F (mm)	M (mm)	N (mm)	L (mm)	R (mm)
A	1.959 (49.76) 1.946 (49.43)	2.086 (52.98) 2.055 (52.20)	1.864 (47.35) 1.853 (47.07)	1.460 (37.08) 1.450 (36.83)	1.780 (45.21) 1.763 (44.78)	1.825 (46.36) 1.815 (46.10)	1.585 (40.26) 1.560 (39.62)	1.890 (48.01)	1.426 (36.22) 1.412 (35.86)	1.386 (35.20) 1.373 (34.87)
B	3.259 (82.78) 3.246 (82.45)	3.386 (86.00) 3.355 (85.22)	3.164 (80.37) 3.153 (80.09)	2.760 (70.10) 2.750 (69.85)	3.080 (78.23) 3.063 (77.80)	3.125 (79.38) 3.115 (79.12)	2.875 (73.03) 2.865 (72.77)	3.186 (80.92) 3.194 (81.13)	2.726 (69.24) 2.712 (68.88)	2.686 (68.22) 2.673 (67.89)

Contact entry dimensions

Contact size	G[1] (mm)	G[2] (mm)	H dia (mm)	J dia (mm)	K dia (mm)	L dia (mm)
22D	.591 (15.01) .533 (13.54)	.472 (11.99) .429 (10.90)	.038 (0.97) .035 (0.89)	.065 (1.65) .063 (1.60)	.016 (0.41) .012 (0.30)	.066 (1.67) .064 (1.63)
20	.537 (13.64) .497 (12.62)	.419 (10.64) .392 (9.96)	.053 (1.35) .051 (1.30)	.118 (3.00) .114 (2.90)	.048 (1.22) .040 (1.02)	.085 (2.16) .083 (2.11)
16	.537 (13.64) .497 (12.62)	.419 (10.64) .393 (9.98)	.075 (1.91) .073 (1.85)	.150 (3.81) .146 (3.71)	.048 (1.22) .040 (1.02)	.120 (3.05) .118 (3.00)
12	.537 (13.64) .497 (12.62)	.419 (10.64) .393 (9.98)	.102 (2.59) .100 (2.54)	.210 (5.33) .206 (5.23)	.048 (1.22) .040 (1.02)	.172 (4.37) .170 (4.32)

NOTES:
1. Dimensions are in inches.
2. Metric equivalents are given for information only.
3. All dimensions are after plating.
4. Back plate is not applicable to -131 and -185 layouts.
5. Dimensions are symmetrical about ℄ within .006 (0.15 mm) T.I.R.

FIGURE 1. Connector, plug, interface and backend dimensions - Continued.

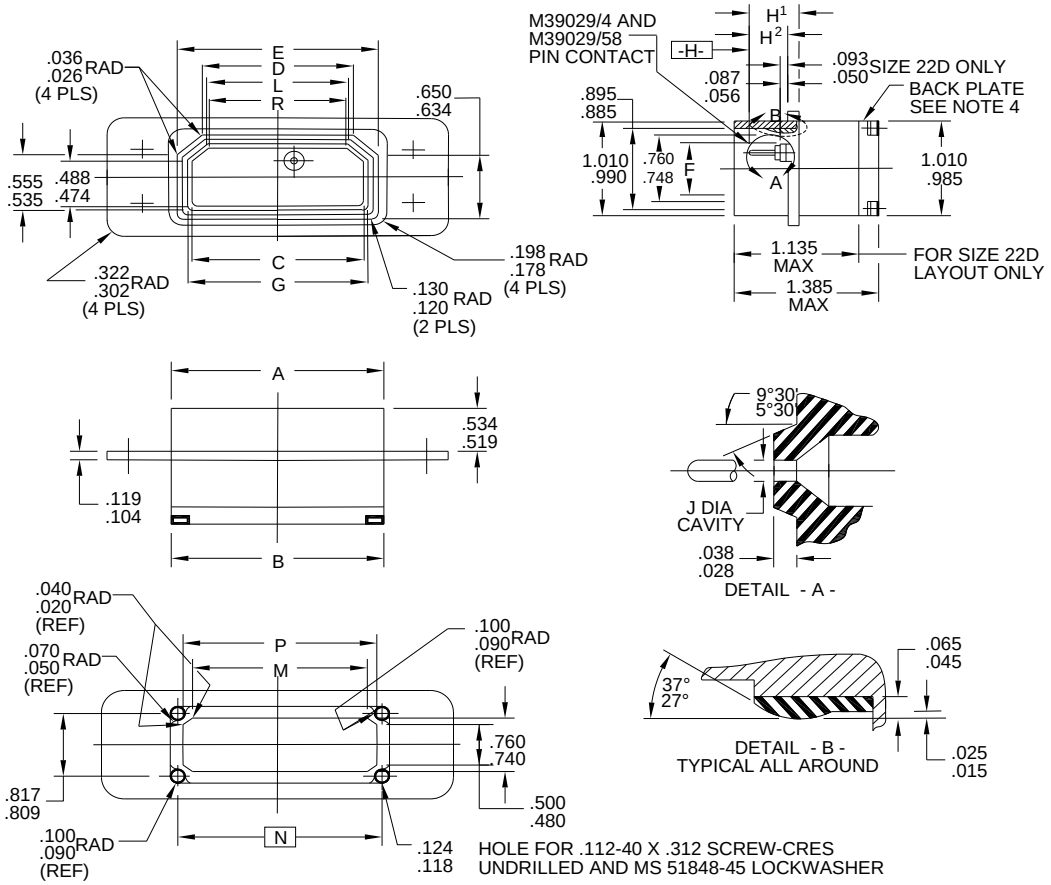

Inches	mm	Inches	mm	Inches	mm	Inches	mm	Inches	mm
.015	0.38	.056	1.42	.120	3.05	.500	12.70	.760	19.30
.020	0.51	.065	1.65	.124	3.15	.519	13.18	.809	20.55
.025	0.64	.070	1.78	.130	3.30	.534	13.56	.817	20.75
.026	0.66	.087	2.21	.178	4.52	.535	13.59	.885	22.48
.028	0.71	.090	2.29	.198	5.03	.555	14.10	.895	22.73
.036	0.91	.093	2.36	.302	7.67	.634	16.10	.988	25.10
.038	0.97	.100	2.54	.322	8.18	.650	16.51	.990	25.15
.040	1.02	.104	2.64	.474	12.04	.700	17.78	1.010	25.65
.045	1.14	.118	3.00	.480	12.19	.740	18.80	1.135	28.83
.050	1.27	.119	3.02	.488	12.40	.748	19.00	1.185	30.10

FIGURE 2. Connector, receptacle, interface and backend dimensions.

Interface and backend dimensions.

Shell size	A (mm)	B (mm)	C (mm)	D (mm)	E (mm)	F (mm)	G (mm)	M (mm)	N (mm)	P (mm)	L (mm)	R (mm)
A	2.085 (52.96) 2.072 (52.63)	2.086 (52.98) 2.055 (52.20)	1.758 (44.65) 1.725 (43.82)	1.485 (37.72) 1.460 (37.08)	1.976 (50.19) 1.961 (49.81)	.687 (17.45) .667 (16.94)	1.845 (46.86) 1.825 (46.36)	1.580 (40.13) 1.560 (39.62)	1.890 (48.01)	1.825 (46.36) 1.815 (46.10)	1.420 (36.07) 1.400 (35.56)	1.370 (34.80) 1.330 (33.78)
B	3.385 (85.98) 3.372 (85.65)	3.386 (86.00) 3.355 (85.22)	3.058 (77.67) 3.025 (76.84)	2.785 (70.74) 2.760 (70.10)	3.281 (83.34) 3.261 (82.83)	.687 (17.45) .667 (16.94)	3.145 (79.88) 3.112 (79.04)	2.880 (73.15) 2.860 (72.64)	3.194 (81.13) 3.186 (80.92)	3.125 (79.38) 3.115 (79.12)	2.720 (69.09) 2.700 (68.58)	2.670 (67.82) 2.630 (66.80)

Contact entry dimensions

Contact size	Pin length		J dia (mm)	K dia (mm)
	H^1 (mm)	H^2 (see note 3) (mm)		
22D	.383 (9.73) .336 (8.53)	.267 (6.78) .230 (5.84)	.028 (0.71) .025 (0.64)	.077 (1.96) .071 (1.80)
20	.416 (10.57) .374 (9.50)	.300 (7.62) .268 (6.80)	.039 (0.99) .036 (0.91)	.112 (2.844) .106 (2.69)
16	.416 (10.57) .374 (9.50)	.300 (7.62) .268 (6.80)	.061 (1.55) .058 (1.47)	.144 (3.66) .138 (3.50)
12	.416 (10.57) .374 (9.50)	.300 (7.62) .268 (6.80)	.093 (2.36) .090 (2.29)	.204 (5.18) .198 (5.03)

NOTES:
1. Dimensions are in inches.
2. Metric equivalents are given for information only.
3. Dimensions after plating.
4. Back plate is not applicable to -131 and -185 layouts.
5. Dimensions are symmetrical about G_L within .006 T.I.R.
6. Interfacial seal dimensions = C, F, R.
7. Peripheral seal dimensions = G and L.

FIGURE 2. Connector, receptacle, interface and backend dimensions - Continued.

3.5.1 Contacts. A quantity of power contacts consisting of the normal complement plus 1 spare contact of each applicable size for connector arrangements having 26 contacts or less, and 2 spare contacts where the number of contacts exceed 26, shall be included in each unit package. No spares shall be furnished for shielded contacts. For indirect shipments, connectors may be supplied without contacts (see 6.2). Thermocouple contacts shall be in accordance with SAE AS39029/9 and SAE AS39029/10. Shielded contacts shall be in accordance with SAE AS39029/50 and SAE AS39029/51. Solderless wrappost contacts shall be in accordance with SAE AS39029/71 and SAE AS39029/72. Power contacts shall be:

Size 22D in accordance with SAE AS39029/57 or SAE AS39029/58.

Sizes 20, 16, and 12 in accordance with SAE AS39029/4, SAE AS39029/5, SAE AS39029/50, or SAE AS39029/51.

3.5.1.1 Insertion and removable tools. The class R and S connector designs shall permit individual insertion and removal of the contacts without removing the insert or sealing members. Insertion of the contacts into and removal of the contacts from the insert shall be accomplished with the applicable tools as shown in SAE-AS81969/8 for size 22D contacts and SAE-AS81969/14 for sizes 20, 16, and 12.

3.5.1.2 Insert arrangement. Insert arrangement shall be in accordance with MIL-STD-1531 (shell size A) and MIL-STD-1532 (shell size B), as specified (see 3.1).

3.5.2 Sealing plugs. Insulated plugs shall be provided for sealing spare contact holes. Ten percent of the number of contacts, but not less than one sealing plug, shall be encased in the unit package. The sealing plugs shall as specified on figure 3.

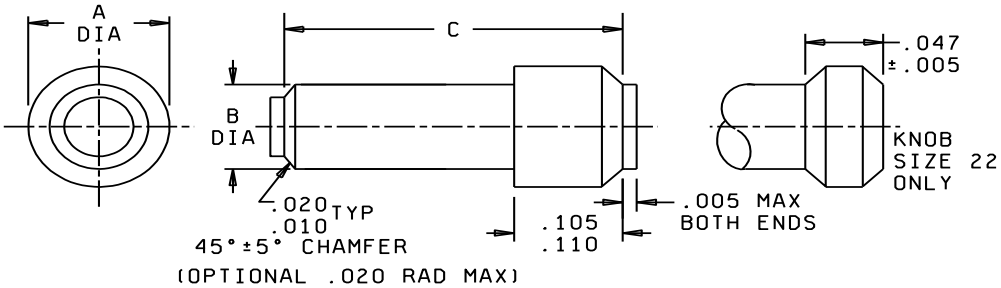

Inches	mm
.005	0.13
.010	0.25
.020	0.51
.047	1.19
.105	2.67
.110	2.79

NOTES:
1. Dimensions are in inches.
2. Metric equivalents are given for information only.

FIGURE 3. Sealing plug.

Contact size (grommet cavity size)	Color code	A dia (mm)	B dia (mm)	C (mm)
22	Black	.068 (1.73) .058 (1.47)	.045 (1.14) .035 (0.89)	.500 (12.70) .438 (11.13)
20	Red	.100 (2.54) .085 (2.16)	.065 (1.65) .045 (1.14)	.584 (14.83) .544 (13.82)
16	Blue	.138 (3.51) .128 (3.25)	.093 (2.36) .073 (1.85)	.584 (14.83) .544 (13.82)
12	Yellow	.176 (4.47) .166 (4.22)	.131 (3.33) .111 (2.82)	.584 (14.83) .544 (13.82)

FIGURE 3. Sealing plug - Continued.

3.5.3 Inserts. The inserts shall be designed and constructed with proper sections and radii so they will not readily chip, crack, or break in assembly or normal service. The inserts shall be non-removable, mechanically retained, and bonded in the shell. The inserts shall be designed and constructed so as to eliminate all air paths between contacts and between contacts and shell. The insert engaging faces shall be designed and constructed so as to eliminate all air paths between contacts and between contacts and shells when the contact is mated. The pin insert face shall be resilient and shall have individual raised sealing barriers around each pin contact with dimensions as specified on figure 2. The socket insert face shall be rigid dielectric and shall have individual chamfered holes at each location with dimensions as specified on figure 1, to provide seats for the pin insert individual sealing barriers and guidance for centering misaligned pin contacts, when mating the connectors. The insert and wire sealing members of class R connectors shall be essentially one integral part, consisting of one or more parts bonded together so as to form essentially one integral piece and shall provide suitable sealing around the wires having diameters within the range specified in table I. The insert shall be designed so as to provide positive locking of individual contacts.

TABLE I. Contact size and wire range accommodations.

Contact size	Wire size accommodation	Wire range accommodation (diameter over insulation)	
		Min (mm)	Max (mm)
22D	28	.030 (0.76)	.060 (1.52)
22D	26	.030 (0.76)	.060 (1.52)
22D	24	.030 (0.76	.060 (1.52)
22D	22	.031 (0.79)	.060 (1.52)
20	24	.040 (1.02)	.083 (2.11)
20	22	.040 (1.02)	.083 (2.11)
20	20	.040 (1.02)	.083 (2.11)
16	20	.063 (1.60)	.103 (2.62)
16	18	.063 (1.60)	.103 (2.62)
16	16	.063 (1.60)	.103 (2.62)
16	14	.081 (2.06)	.158 (4.01)
12	12	.081 (2.06)	.158 (4.01)
12 (shielded)	M17/094-RG179	- - -	- - -

3.5.4 Shell design. The connector shall be of the solid shell design and shall be constructed to positively retain inserts. The configuration shall be essentially rectangular as shown (see 3.1). The engaging skirts shall provide a keystone shape to preclude mating when either connector is rotated 180° from the correct mating position. The engaging surfaces shall be configured to align the shells while mating to provide proper guidance for engagement of the pin and socket contacts.

3.5.4.1 Rack and panel mounting. Rack and panel connector shells shall be capable of being interchangeably mounted in a fixed or floating position as shown (see 3.1). Fixed mounted connectors shall mate properly with float mounted counterpart connectors. Shells shall be provided either with captive clinch nuts for fixed mounting, or shall be provided with or have provisions to allow installation of spring mounts, bushings, or guide pins as specified (see 3.1).

3.5.4.2 Shell peripheral seal. A nonremovable integral resilient peripheral seal shall be provided in the receptacle shell. The seal shall engage the mating plug shell before mating is complete.

3.5.5 Backplate. When compressed about the wires and contacts by the backplate, the sealing member shall not distort or bind any of the contacts to cause improper operation of the connector.

3.5.6 Screw threads. Screw threads shall be in accordance with FED-STD-H28.

3.5.7 Contact identification. The contact positions shall be designed on the front and rear of the inserts as shown in MIL-STD-1531 (shell size A) or MIL-STD-1532 (shell size B). Designators shall be legible. Where space limitations render legibility or proper functioning of the connector impossible, or where such designations may render possible confusion between contacts, contact position designations may be omitted after the grid pattern has been established. Location of identifying characters shall be in close proximity to the holes but need not be placed exactly where indicated on the standard.

3.6 Performance. Connectors shall be designed to meet the requirements specified herein.

3.6.1 Class R and S connectors. Class R and S connectors shall be mounted and mated as specified on figure 4 unless otherwise specified, and shall perform as follows when subjected to the environments and test specified.

3.6.2 Maintenance aging. When tested as specified in 4.7.3, connectors shall meet the requirements of 3.6.4 (mating and unmating forces), 3.6.23 (contact insertion and removal forces), and all subsequent required tests.

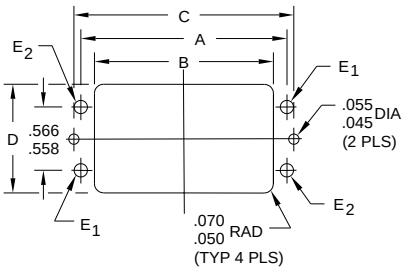

Reference: 4a. Panel cut-out dimensions.

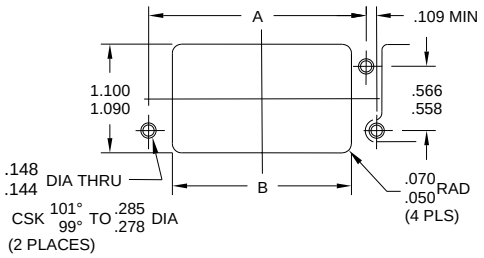

Reference: 4c. Panel cut-out dimension.

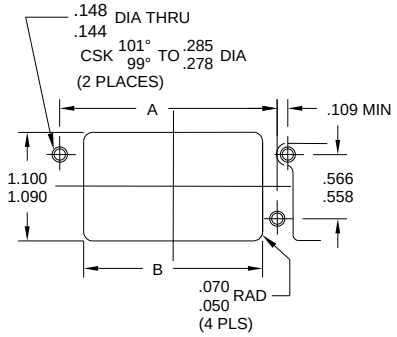

Reference: 4b. Panel cut-out dimension.

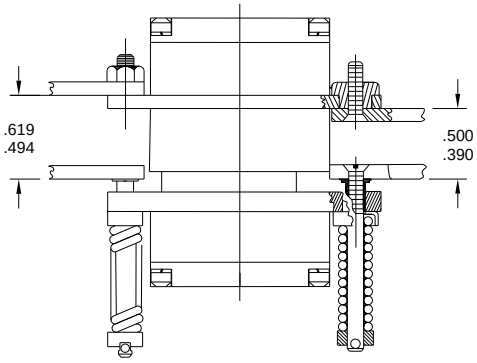

Reference 4d. Recommended panel spacing (MIL-DTL-83733/4, /5, /6, /7, AND /10

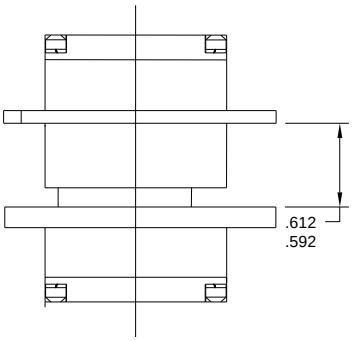

Reference: 4e Recommended panel spacing for connectors without mounting hardware.

Inches	mm	Inches	mm
.045	1.14	.390	9.91
.050	1.27	.494	12.55
.055	1.40	.500	12.70
.070	1.78	.558	14.17
.109	2.77	.566	14.38
.144	3.66	.592	15.03
.148	3.76	.619	15.72
.278	7.06	1.090	27.69
.288	7.32	1.100	27.94

FIGURE 4. Panel cut-out dimensions and recommended panel spacing.

Specification MIL-DTL-83733	Figure 4 references	Dimensions (mm)											
		A ±.004 (0.10)		B ±.005 (0.13)		C ±.005 (0.13)		D ±.005 (0.13)		E_1		E_2	
		Shell size A	Shell size B	Shell size A	Shell size B	Shell size A	Shell size B	Shell size A	Shell size B	Shell size A	Shell size B	Shell size A	Shell size B
/1, /5, /6	4a	2.578 (65.48)	3.875 (98.43)	2.103 (53.42)	3.400 (86.36)	2.765 (70.23)	4.062 (103.17)	1.022 (25.96)	1.022 (25.96)	.148 .144	.148 .144	.148 .144	.148 .144
/2	4a	---	3.875 (98.43)	---	3.465 (88.01)	---	4.062 (103.17)	---	1.095 (27.81)	---	.148 .144	---	.260 .250
/3	4a	---	3.875 (98.43)	---	3.465 (88.01)	---	4.062 (103.17)	---	1.095 (27.81)	---	.320 .315	---	.148 .144
/4	4a	2.578 (65.48)	3.875 (98.43)	2.167 (55.04)	3.465 (88.01)	2.765 (70.23)	4.062 (103.17)	1.095 (27.81)	1.095 (27.81)	.148 .144	.148 .144	.148 .144	.148 .144
/7	4a	2.578 (65.48)	3.875 (98.43)	2.167 (55.04)	3.465 (88.01)	2.765 (70.23)	4.062 (103.17)	1.095 (27.81)	1.095 (27.81)	.148 .144	.148 .144	.430 .420	.430 .420
/8	4a	---	3.875 (98.43)	---	3.465 (88.01)	---	4.062 (103.17)	---	1.095 (27.81)	---	.380 .370	---	.148 .144
/9, /10, /11	4c	2.578 (65.48)	3.875 (98.43)	2.167 (55.04)	3.465 (88.01)	---	---	1.095 (27.81)	1.022 (25.96)	---	---	---	---
/12	4b	2.578 (65.48)	3.875 (98.43)	2.095 (53.21)	3.400 (86.36)	---	---	1.095 (27.81)	1.095 (27.81)	---	---	---	---

NOTES:
1. Dimensions are in inches.
2. Metric equivalents are given for information only.

FIGURE 4. Panel cut-out dimensions and recommended panel spacing - Continued.

3.6.3 Temperature cycling. When connectors are tested as specified in 4.7.4, there shall be no evidence of physical damage. Following temperature cycling, the dielectric withstanding voltage shall meet the requirements of 3.6.16.1.

3.6.4 Mating and unmating forces. When tested as specified in 4.7.5, the axial force required to fully mate or separate the plug and receptacle shall not exceed the applicable value listed in table II.

TABLE II. Mating force.

Shell size	Maximum force pounds (N)	
	Without mounting Accessories 2/	Spring mounting 1/
A	70 (311.4)	176 (783)
B	95 (422.6)	176 (783)

1/ For connectors using spring mounting, the mating force becomes a function of the spring loading. Values listed apply to connectors mounted as specified on figure 4 at minimum panel spacing.
2/ Maximum mating force for shell size A, insert arrangement 131 layout only allowed is 118 (525) pounds (N).

3.6.5 Altitude immersion. When tested as specified in 4.7.6, the insulation resistance shall be not less than 1,000 megohms, and a dielectric withstanding voltage shall not be less than 1,000 volts rms at sea

level for service rating M, and 1,500 volts rms at sea level for service rating I.

3.6.6 Insert retention. When tested as specified in 4.7.7, completely assembled and unmated connectors shall withstand an axial load of 45 pounds (200 N) applied to the mating face for a period of at least 5 seconds without being dislocated from their normal position in the shell, cracking, or breaking.

3.6.7 Salt spray (corrosion). When tested as specified in 4.7.8, connectors and contacts shall show no exposure of basic metal due to corrosion, which will adversely affect performance.

3.6.8 Contact resistance. When tested as specified in 4.7.9, the contact resistance (millivolt drop) for class R connectors shall not exceed the values listed in table III.

TABLE III. Contact resistance (millivolt drop).

Contact size	Wire size	Maximum voltage drop (millivolt)				Test current (amperes)
		Silver plated wire		Nickel plated wire		
		+3° 25° C -0°	+3° 200° C -0°	+3° 25° C -0°	+3° 200° C -0°	
22D	28	54	92	81	138	1.0
22D	26	52	89	80	137	2.0
22D	24	45	77	68	116	3.0
22D	22	73	125	110	188	5.0
20	24	45	77	68	116	3.0
20	22	73	125	110	188	5.0
20	20	55	94	83	141	7.5
16	20	46	79	69	119	7.5
16	18	46	79	69	119	7.5
16	16	49	84	74	126	13.0
12	14	40	68	60	102	17.0
12	12	42	71	63	107	23.0

3.6.9 Gauge location. When tested as specified in 4.7.10, the axial location of contacts shall be measured using test gauges as specified on figure 5 or figure 6, or in accordance with MS3461, as applicable. Gauge location measurements shall fall within the range specified on figure 1 or figure 2, as applicable.

3.6.10 Pin contact stability. When tested as specified in 4.7.11, the total displacement of the contact tip end shall not exceed the applicable limit specified in table IV.

TABLE IV. Pin contact stability.

Pin size	Total Displacement (mm)
22D	.030 (0.76)
20	.026 (0.66)
16	.028 (0.71)
12	.030 (0.76)

3.6.11 Gauge retention. When tested as specified in 4.7.12, test gauges as specified on figure 5, figure 6, or in accordance with MS3461, as applicable, shall be retained in the contact cavities of crimp contact connectors. The axial displacement of the test gauge while under load shall not exceed .012 inch (0.30 mm).

3.6.12 Magnetic permeability. The relative permeability of the connector assembly, when tested as specified in 4.7.13 shall be 2.0μ or less.

3.6.13 Contact retention. When tested as specified in 4.7.14, the individual contact-locking mechanism of unmated connectors shall withstand, in both directions, the axial load specified in table V. During the axial displacement of the contact shall not exceed .012 inch (0.30 mm) when pressures are applied from the face side.

TABLE V. Axial load.

Contact size	Axial load pounds (N)
22D	10 ±1 (44.5 ±4.4)
20	20 +3/-0(89.0 +13.3/-0)
16	25 +3/-0 (111.2 +13.3/-0)
12	30 +3/-0 (133.4 +13.3/-0)

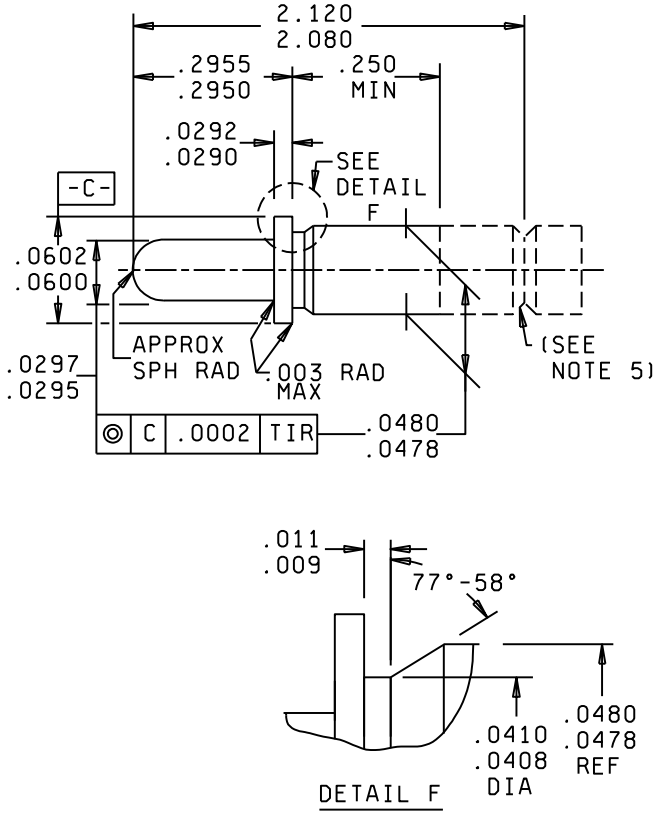

CONTACT SIZE 22D.

Inches	mm	Inches	mm
.003	0.08	.0478	1.214
.009	0.23	.0480	1.219
.011	0.28	.0600	1.524
.0290	0.737	.0602	1.529
.0292	0.742	.250	6.35
.0295	0.749	.2950	7.493
.0297	0.754	.2955	7.506
.0408	1.036	2.080	52.83
.0410	1.041	2.120	53.85

FIGURE 5. Test gauge, pin, gauge location and retention.

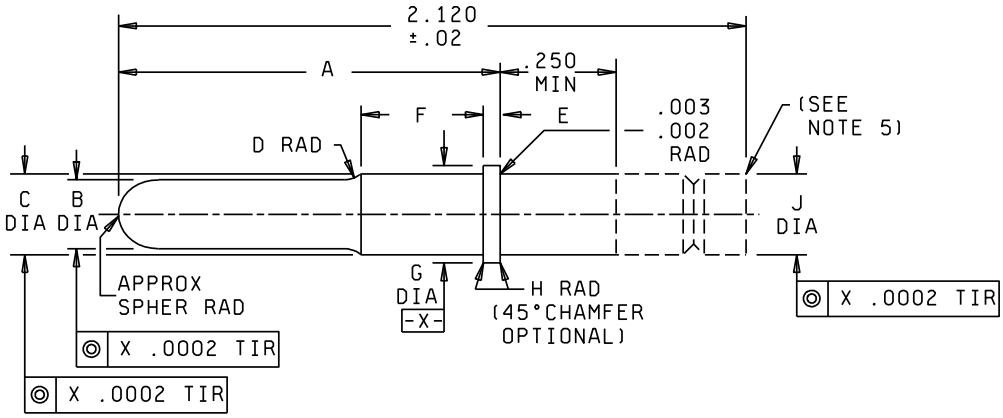

CONTACT SIZES 12, 16, and 20.

Contact size	A +.0005 (0.013) -.0000 (mm)	B +.0002 (0.005) -.0000 (mm)	C +.0002 (0.005) -.0000 (mm)	D (rad) ±.005 (0.13) (mm)	E +.0000 -.0002 (0.005) (mm)	F +.0000 -.0005 (mm)	G +.0002 (0.005) -.0000 (mm)	H (rad) +.0000 -.0005 (0.013) (mm)	J +.0000 -.0002 (0.005) (mm)
20	.5430 (13.792)	.0390 (0.991)	.0760 (1.930)	.050 (1.27)	.0330 (0.838)	.1250 (3.175)	.1000 (2.540)	.0050 (0.127)	.0780 (1.981)
16	.5580 (14.173)	.0615 (1.562)	.1010 (2.565)	.050 (1.27)	.0480 (1.219)	.1250 (3.175)	.1300 (3.302)	.0050 (0.127)	.1030 (2.616)
12	.5580 (14.173)	.0930 (2.362)	.1480 (3.759)	.050 (1.27)	.0480 (1.219)	.1115 (2.832)	.1870 (4.750)	.0050 (0.127)	.1580 (4.013)

NOTES:
1. Dimensions are in inches.
2. Metric equivalents are given for information only.
3. Material: Hardened tool steel.
4. Finish: 32 - microinch polished.
5. Design of rear extension is optional, but must have a groove provided as indicated.

FIGURE 5. Test gauge, pin, gauge location and retention - Continued.

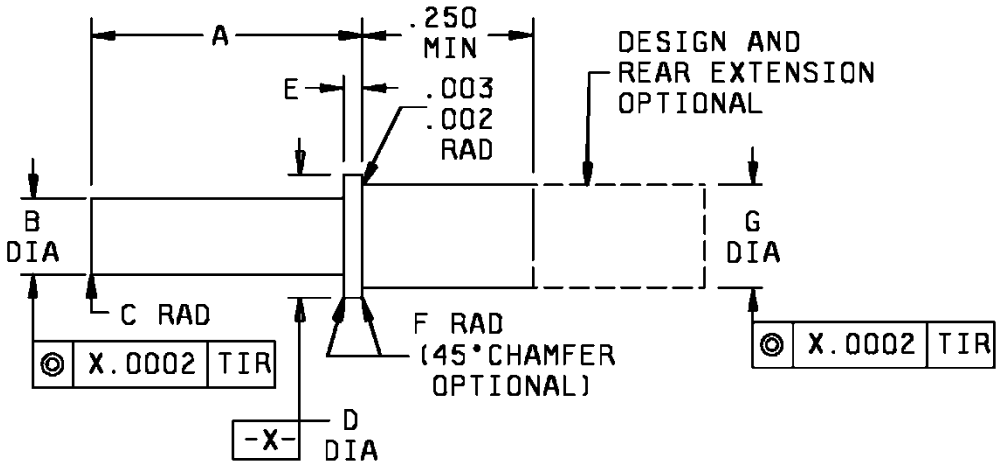

Contact Size	A +.0005 (0.013) -.0000 (mm)	B +.0002 (0.005) -.0000 (mm)	C (rad) (mm)	D +.0002 (0.005) -.0000 (mm)	E +.0000 -.0002 (0.005) (mm)	F (rad) +.0000 -.0005 (0.013) (mm)	G +.0002 (0.005) -.0000 (mm)
22D	.2885 (7.328)	.0600 (1.524)	.004 (0.10) .002 (0.05)	.0610 (1.549)	.0292 (0.742)	.0030 (0.076)	.0478 (1.214)
20	.4790 (12.167)	.0760 (1.930)	.010 (0.25) .005 (0.13)	.1000 (2.540)	.0330 (0.838)	.0050 (0.127)	.0780 (1.981)
16	.4940 (12.548)	.1100 (2.794)	.010 (0.25) .005 (0.13)	.1300 (3.302)	.0480 (1.219)	.0050 (0.127)	.1030 (2.616)
12	.4940 (12.548)	.1580 (4.013)	.010 (0.25) .005 (0.13)	.1870 (4.750)	.0480 (1.219)	.0050 (0.127)	.1580 (4.013)

NOTES:
1. Dimensions are in inches.
2. Metric equivalents are given for information only.
3. Material: Hardened tool steel.
4. Finish: 32 - microinch polished.

FIGURE 6. Test gauge, socket, gauge location and retention.

3.6.14 Altitude - low temperature. When tested as specified in 4.7.15, connectors shall withstand a dielectric withstanding voltage of 625 Vrms after stabilizing at an atmospheric pressure equivalent to an altitude of 80,000 feet (24.38 km) and a temperature of -54°C +4°C, -0°C.

3.6.15 Insulation resistance.

3.6.15.1 At ambient temperature. When tested as specified in 4.7.16.1, the insulation resistance of connectors shall be greater than 5,000 megohms when measured separately between pairs of contacts and between the shell and any contact.

3.6.15.2 At elevated temperature. When tested as specified in 4.6.16.2, the insulation resistance of connectors shall be greater than 200 megohms when measured separately between any two contacts and between the shell and any contact.

3.6.16 Dielectric withstanding voltage.

3.6.16.1 Dielectric withstanding voltage. When tested as specified in 4.7.17.1, connectors shall show no evidence of breakdown or flashover.

3.6.16.2 Dielectric withstanding voltage, altitude. When tested as specified in 4.7.17.2, completely wired and assembled shall show no evidence of breakdown or flashover.

3.6.17 Durability. When tested as specified in 4.7.18, mated pairs of fully assembled connectors shall meet the subsequent test requirements listed in table VI.

3.6.18 Random vibration. When tested as specified in 4.7.19, connectors shall not crack or break and there shall be no loosening of parts. Connectors shall be in full engagement during vibration. Interruption of electrical continuity shall not be longer than 1.0 microsecond.

3.6.19 Shock (specified pulse). During and after the test specified in 4.7.20, connectors shall show no sign of damage.

3.6.20 Humidity. During and after the test specified in 4.7.21, the insulation resistance shall be not less than 100 megohms.

3.6.21 Ozone exposure. When tested as specified in 4.7.22, connectors shall meet the subsequent test requirements listed in table VI.

3.6.22 Fluid immersion. When tested as specified in 4.7.23, connectors shall meet the subsequent test requirements listed in table VI.

3.6.22.1 Retention system fluid exposure. When tested as specified in 4.7.23.1, connectors shall meet the requirements of 3.6.11. Effects of fluids on resilient sealing members shall not be a consideration of this test.

TABLE VI. Qualification inspection.

Inspection	Requirement paragraph	Test paragraph
Group 1		
Examination of product	3.1, 3.3, 3.4, 3.7, 3.8, and 3.9	4.7.2
Maintenance aging	3.6.2	4.7.3
Temperature cycling	3.6.3	4.7.4
Mating and unmating forces	3.6.4	4.7.5
Altitude immersion 1/	3.6.5	4.7.6
Insert retention	3.6.6	4.7.7
Salt spray (corrosion)	3.6.7	4.7.8
Mating and unmating forces	3.6.4	4.7.5
Contact resistance	3.6.8	4.7.9
Post test inspection	---	4.7.30
Group 2		
Examination of product	3.1, 3.3, 3.4, 3.7, 3.8, and 3.9	4.7.2
Gauge location	3.6.9	4.7.10
Gauge retention	3.6.11	4.7.12
Maintenance aging	3.6.2	4.7.3
Magnetic permeability	3.6.12	4.7.13
Contact retention 2/	3.6.13	4.7.14
Altitude - low temperature	3.6.14	4.7.15
Insulation resistance at ambient temperature	3.6.15.1	4.7.16.1
Temperature cycling	3.6.3	4.7.4
Dielectric withstanding voltage	3.6.16.1	4.7.17.1
Dielectric withstanding voltage, altitude 1/	3.6.16.2	4.7.17.2
Mating and unmating forces	3.6.4	4.7.5
Insulation resistance at elevated temperature	3.6.15.2	4.7.16.2
Durability	3.6.17	4.7.18
Random vibration 1/	3.6.18	4.7.19
Shock (specified pulse)	3.6.19	4.7.20
Humidity	3.6.20	4.7.21
Contact retention 3/	3.6.8	4.7.9
Post test inspection	---	4.7.30

See footnotes at end of table.

TABLE VI. Qualification inspection - Continued.

Group 3	Requirement paragraph	Test Paragraph
Examination of product	3.1, 3.3, 3.4, 3.7, 3.8, and 3.9	4.7.2
Ozone exposure	3.6.21	4.7.22
Insulation resistance at ambient temperature	3.6.15.1	4.7.16.1
Dielectric withstanding voltage	3.6.16.1	4.7.17.1
Fluid immersion (one mated pair per fluid)	3.6.22	4.7.23
Mating and unmating forces	3.6.4	4.7.5
Thermal vacuum out-gassing (class S)	3.6.24	4.7.28
Flammability, odor, and toxicity (class S)	3.6.25	4.7.29
Post test inspection	---	4.7.30
Group 4		
Examination of product	3.1, 3.3, 3.4, 3.7, 3.8, and 3.9	4.7.2
Contact walkout	3.6.26	4.7.25
Insertion removal tool abuse 1/	3.6.27	4.7.26
Pin contact stability	3.6.10	4.7.11
Retention system fluid exposure (one mated pair per fluid)	3.6.22.1	4.7.23.1
Temperature life with contact loading 1/	3.6.28	4.7.27
Gauge retention	3.6.11	4.7.12
Contact insertion and removal forces	3.6.23	4.7.24
Insert retention	3.6.6	4.7.7
Post test inspection	---	4.7.30

1/ Original qualification only.
2/ Load from front only.
3/ Load from both directions.

3.6.23 Contact insertion and removal forces. When tested as specified in 4.7.24, the individual contact insertion force shall not exceed 15 pounds (66.7 N) and the removal force shall not exceed 10 pounds (44.5 N). Contacts shall be wired using wire specified in table VII. The applicable tool specified in 3.5.1.1 shall be used for this test.

3.6.24 Thermal vacuum out-gassing (class S). The connector assembly, when tested in accordance with 4.7.28, shall not have a total mass loss (TML) of 1.0 percent of the original specimen mass and shall have a maximum volatile condensable material (VCM) content of 0.1 percent of the original specimen mass. When successfully tested as specified in 4.7.30, the connectors shall meet the subsequent tests listed in table VI.

3.6.25 Flammability, odor, and toxicity (class S). Fully mated connectors shall be tested as specified in 4.7.29 and shall meet subsequent tests listed in table VI.

3.6.26 Contact walkout. When tested as specified in 4.7.25, contacts shall not become dislodged from their normal position.

3.6.27 Insertion removal tool abuse. When tested as specified in 4.7.26, there shall be no damage to the contacts, the connector insert, or the contact retainer mechanism. The connectors shall meet the requirements of subsequent testing.

3.6.28 Temperature life with contact loading. When tested as specified in 4.7.27, contacts shall maintain their specified locations as specified on figure 1 or figure 2, as applicable and there shall be no

electrical discontinuity in excess of 1.0 microsecond.

3.7 Interchangeability. All complete connectors, including their complement of contacts, having the same PIN shall be completely interchangeable with each other with respect to installation (physical) and performance (function) as specified herein.

3.8 Marking. Connectors and shields are to be marked in accordance with method I of MIL-STD-1285, and are to include the PIN (see 3.1), the manufacturer's name or code symbol, and date code. For shipments of connectors with crimp removable contacts, shipped separately, to the original equipment manufacturer (OEM) or other contractors, the complete military PIN of the connector with contacts to be loaded, shall be marked on the connector (see 3.5.1 and 6.2). For shipments of connectors without contacts to the OEM's or other contractors, the connector shall be marked with the complete PIN of the connector "without contacts" (1L designation). For field replacement purposes, the contact types used shall be specified in the OEM's technical data.

3.9 Workmanship. Connectors, contacts, shields, jackscrews, and guide pins shall be processed in such a manner as to be uniform in quality and shall be free from defects that will affect life, serviceability or appearance. There shall be no evidence of poor molding, fabricating, cracking of insulator after molding or improperly assembled contacts, peeling or chipping of the plating or finish, nicks and burrs of metal parts surfaces, and no post molding warpage of connectors. The contacts shall be free from such burrs or sharp cutting edges (except wire wrapposts) that would damage the plating of mating connectors.

4. VERIFICATION

4.1 Classification of inspection. The inspection requirements specified herein are classified as follows:

a. Qualification inspection (see 4.4).

b. Conformance inspection (see 4.6).

4.2 Inspection conditions. Unless otherwise specified, all inspections shall be performed in accordance with the test conditions specified in the “General Requirements” of EIA-364 and MIL-STD-202.

4.2.1 Verification testing. The following identified tests and test methods assure connector integrity within typical operating conditions and applications. Alternate commercial industry standard test methods are allowed, however when an alternate method is used, the alternate method must be coordinated with the qualifying activity prior to performance of the test. The test methods described herein are proven methods and shall be the referee method in cases of dispute.

4.2.1.1 Reliability assurance program. A reliability assurance program shall be established and maintained in accordance with MIL-STD-790. Evidence of such compliance shall be verified by the qualifying activity of this specification as a prerequisite for qualification.

4.2.1.2 Test equipment and inspection facilities. Test and measuring equipment and inspection facilities of sufficient accuracy, quality and quantity to permit performance of the required inspection shall be established and maintained by the contractor. The establishment and maintenance of a calibration system to control the accuracy of the measuring and test equipment (i.e., NCSL-Z540.3, ISO-10012 or comparable standards) shall be required.

4.3 Materials inspection. Materials inspection shall consist of certification supported by verifying data that the materials as specified herein and on the applicable military specification sheets (see 3.1), used in

fabricating the connectors, are in accordance with the applicable referenced specifications or performance requirements prior to such fabrication (see 3.5, 4.7.2, and 6.2).

4.4 Qualification inspection. Qualification inspection shall be performed at a laboratory acceptable to the Government (see 6.3) on sample units produced with equipment and procedures normally used in production. Use of alternate materials, plating, and processes (see 3.3.1) shall be identified for inclusion in the product test documentation.

4.5 Qualification sample size and inspection routine. The number of connectors and the inspection to which they shall be subjected shall be as follows:

a. A minimum of two complete pairs of connectors of each shell size, with insert arrangements containing power contacts of all sizes for which qualification is desired, shall be wired with minimum diameter wire in table VII and mounted as specified on figure 4. Mating connector samples shall be divided into two similar groups. One group shall be subjected to the tests of group 1, table VI, in the sequence indicated. The other group shall be subjected to the tests of group 2, table VI, in the sequence indicated.

b. A minimum of two complete mating pairs of connectors of each shell size, with insert arrangements containing power contacts of all sizes for which qualification is desired, shall be wired with the maximum wire in table VII and mounted as specified on figure 4. Mating connector samples shall be divided into two similar groups. One group shall be subjected to the tests of group 1, table VI, in the sequence indicated. The other group shall be subjected to the tests of group 2, table VI, in the sequence indicated.

c. Twelve mated pairs of connectors representing both shell sizes in any insert arrangement providing a minimum of 21 contact cavities of each appropriate contact size shall be terminated with nominal gauge wire and mounted as specified on figure 4. The connectors shall be subjected to the tests of group 4, table VI, in the sequence indicated.

d. Twelve mated pairs of connectors, representing both shell sizes in any insert arrangements, shall be terminated with nominal gauge wire and mounted as specified on figure 4. The connectors shall be subjected to the tests of group 3, table VI, in the sequence indicated.

TABLE VII. Test wire sizes.

Contact size	Maximum wire dia (mm)	Minimum wire dia (mm)
22D	.049 ±.002 (1.24 ±0.05)	.031 - .034 (0.79 - 0.86)
20	.068 ±.002 (1.73 ±0.05)	.040 - .045 (1.02 - 1.14)
16	.085 ±.002 (2.16 ±0.05)	.068 - .074 (1.73 - 1.88)
12	.120 ±.004 (3.05 ±0.10)	.097 - .107 (2.46 - 2.72)
12 Shielded	M17/094-RG179	- - -

4.5.1 Preparation of samples. Preparation of samples shall be in accordance with 4.5. Mated connectors shall be as specified on figure 4.

4.5.2 Retention of qualification. Retention of qualification inspection on samples shall consist of the examinations and tests shown in table VI. Shipment shall not be held up pending the results of this inspection. To retain qualification, the qualified manufacturer shall periodically forward reports to the Qualifying Activity (see 6.3) as follows:

a. At 24 month intervals, unless otherwise specified by the Qualifying Activity, the qualified manufacturer shall forward a report with a summary of the results of group A testing (see 4.3). The results of tests for all reworked lots shall be identified and accounted for.

b. At 36 month intervals, unless otherwise specified by the Qualifying Activity, the qualified manufacturer shall submit requalification and group B test reports (see 4.6.1.2.3). The report shall include results of all qualification verification inspection testing performed during that period.

Reports shall include certification that the qualified source continues to produce qualified product under the same conditions as originally qualified (i.e., same processes, materials, design, construction, etc., including manufacturing locations), unless such changes have been authorized by the Qualifying Activity.

Note: The qualified source shall immediately notify the Qualifying Activity at any time during the reporting period when inspection data indicates failure of the qualified product to meet the requirements of the specification. If the summary of test results indicates nonconformance with the specification requirements, and corrective action acceptable to the Qualifying Activity has not been taken, then action may be taken to remove failing product from the QPL. In addition, failure to submit the report within thirty days after the end of each reporting period may result in loss of qualification for that product. In the event that no production occurred during the reporting period, the qualified manufacturer shall submit a report certifying that the company still has the capability and facilities required to produce the qualified product. If there has been no production during two consecutive reporting periods, the Qualifying Activity, at their discretion, may require the manufacturer submit a representative product of each type, class, etc., to retention testing in accordance with qualification inspection requirements.

4.5.3 Failures. One or more failures shall be cause for refusal to grant qualification approval.

4.6 Conformance inspection.

4.6.1 Inspection of product for delivery. Inspection of product for delivery shall consist of group A inspection.

4.6.1.1 Inspection lot. An inspection lot shall consist of all the connectors of the same PIN, produced under essentially the same conditions, and offered for inspection at one time.

4.6.1.2 Group A inspection. Group A inspection shall consist of the tests specified in table VIII and the dielectric withstanding voltage test specified in 4.7.17.1.

TABLE VIII. Group A inspection.

Inspection	Requirement paragraph	Test paragraph
Examination of product	3.1, 3.3, 3.4, 3.7, 3.8, and 3.9	4.7.2
Dielectric withstanding voltage	3.6.16.1	4.7.17.1

4.6.1.2.1 Sampling plan (group A). Statistical sampling and inspection for the samples submitted for group A inspection shall be on a lot by lot basis with sample sizes as listed in table IX. Any occurrence of a failure shall be considered as failure of the lot.

TABLE IX. Lot and sample size.

Lot size	Sample size
1 to 5	All
6 to 50	5
51 to 90	7
91 to 150	11
151 to 280	13
281 to 500	16
501 to 1200	19
1201 to 3200	23
3201 to 10000	29
10001 to …..	35

4.6.1.2.2 Rejected lots. If an inspection lot is rejected, the manufacturer may rework it to correct the defects, or screen out the defective units, and resubmit for reinspection. Resubmitted lots shall be inspected using the sample size of the next higher lot size specified in table IX and shall not thereafter be tendered for acceptance unless the problem is corrected and the corrective action taken is identified. Such lots shall be clearly identified as reinspected lots.

4.6.1.2.3 Group B inspection (periodic). Periodic inspection shall consist of a 12-month inspection and a 36-month requalification.

4.6.1.2.3.1 Twelve-month inspection. Connectors shall be selected at random during each 12-month integrated production period in accordance with table X.

4.6.1.2.3.2 Thirty-six month re-qualification. Requalification inspection shall be performed in accordance with table VI on current production samples at least once every 36 months. Sample selection shall be in accordance with 4.5.

4.6.1.2.4 Group B inspection and sample selection. Group B inspection shall consist of the

examinations and tests specified in table X, in the order shown, and the sample shall be selected from inspection lots that have passed group A inspection. Connectors shall be selected at random during each 12-month integrated production period as follows:

a. One mated pair of connectors containing a high density insert arrangement (-131 or -185) shall be terminated and mounted in accordance with 4.5a. The connectors shall be subjected to the tests of group 1, table X.

b. One mated pair of connectors containing a high density insert arrangement (-131 or -185) shall be terminated and mounted in accordance with 4.5b. These connectors shall be subjected to tests of group 2, table X.

c. A minimum of one mated pair of connectors containing a typical insert arrangement representing two or more contact sizes shall be terminated and mounted in accordance with 4.5c. The connectors shall be subjected to the tests of group 3, table X.

d. Two mated pairs of connectors containing any representative insert arrangement shall be terminated and mounted in accordance with 4.5d. One mated pair shall be subjected to the tests of group 4, table X. The other mated pair shall be subjected to the tests of group 5, table X.

TABLE X. Group B 12-month inspection.

Inspection/Test	Requirement paragraph	Method paragraph	Group				
			1	2	3	4	5
Examination of product	3.3, 3.8	4.7.2	X	X	X	X	X
Insulation resistance at ambient temperature	3.6.15.1	4.7.16.1	X	X	X	X	X
Dielectric withstanding voltage	3.6.16.1	4.7.17.1	X	X	X	X	X
Humidity	3.6.20	4.7.21	X	X			
Temperature life with contact loading (250 hours)	3.6.28	4.7.27			X		
Insert retention	3.6.6	4.7.7			X		
Fluid immersion (MIL-PRF-87257)	3.6.22	4.7.23				X	
Fluid Immersion (MIL-DTL-5624, JP-5)	3.6.22	4.7.23					X
Mating and unmating forces	3.6.4	4.7.5				X	X
Post test inspection	- - -	4.7.30	X	X	X	X	X

4.6.1.2.5 Failures. If one or more sample units fail to pass group B inspection, the sample shall be considered to have failed.

4.6.1.2.6 Rejected lots. If an inspection lot is rejected, the contractor may rework it to correct the defects, or screen out the defective units, and resubmit for reinspection. Such lots shall be separate from new lots, and shall be clearly identified as reinspected lots. If an inspection lot fails fluid immersion the entire lot is considered to have failed, and shall not be reinspected.

4.6.1.2.7 Disposition of sample units. Sample units which have passed group B inspection shall not be delivered on a contract or purchase order.

4.6.1.2.8 Noncompliance. If a sample fails to pass the group B inspection, the contractor shall take corrective action on the materials, processes, or both, as warranted, on all units of product which can be

corrected and which was manufactured under essentially the same conditions, with essentially the same materials, processes, etc., and which is considered subject to the same failure. Acceptance of the product shall be discontinued until corrective action, acceptable to the Government, has been taken. After the corrective action has been taken, group B inspection shall be repeated on additional sample units (all inspection, or the inspection which the original sample failed, at the option of the Government). Group A inspections may be reinstituted; however, final acceptance shall be withheld until the group B reinspection has shown that the corrective action was successful. In the event of failure after reinspection, information concerning the failure and corrective action taken shall be furnished to the cognizant inspection activity and the qualifying activity.

4.7 Methods of inspection.

4.7.1 Test methods. The following identified tests and test methods assure connector integrity within typical operating conditions and applications. Alternate commercial industry standard methods are allowed, however when and alternate method is used, the qualifying activity must be notified prior to performance of the test. The test methods described herein are proven methods and shall be the referee method in cases of dispute.

4.7.2 Visual and mechanical examination. Connectors and associated fittings shall be examined to verify that the design, construction, physical dimensions, marking and workmanship are in accordance with the applicable requirements (see 3.1, 3.3, 3.4, 3.7, 3.8, and 3.9).

4.7.3 Maintenance aging (3.6.2). Each contact shall be inserted, removed, and reinserted using applicable insertion and removal tools. The connector shall be mated and unmated 10 times and at least 10 of the contacts in both plugs and receptacles shall be inserted and removed 9 times, using applicable insertion and removal tools. The contact insertion and removal forces required by 4.6.24 shall be made on the third insertion of 5 contacts of each of the connectors.

4.7.4 Temperature cycling (see 3.6.3). Wired and mated connectors shall be subjected to temperature cycling in accordance with test procedure EIA-364-32, condition I, 5 cycles, except the minimum temperature shall be -65° +0°, -3°C and the maximum temperature shall be 200° +3°, -0°C. Upon completion of the last cycle, the connectors shall be returned to room temperature for inspection and additional tests specified in table VI.

4.7.5 Mating and unmating forces (see 3.6.4). Mating and unmating forces shall be measured in accordance with, test procedure EIA-364-13. The following details shall apply:

a. Special mounting means: See EIA-364-13.

b. Force or torque requirements: See table II.

c. Lubrication: None.

d. Wire type, gauge, and length: See table VII and 4.5.1: Length optional.

e. Rate of mating and unmating: Maximum of 10 seconds for each operation.

f. Definition of mating parameter: Mating dimensions are as specified on figure 4.

g. Applicable hardware: All hardware furnished with connector.

h. Test conditions: Standard ambient.

4.7.6 Altitude immersion (see 3.6.5). Mated connectors shall be tested in accordance with test procedure EIA-364-03. The following details shall apply.

a. All wire ends shall be located within the chamber and exposed to the chamber atmosphere, but not submerged or sealed.

b. At the end of the third cycle while connectors are still submerged in the solution, the insulation resistance shall be measured as specified in 4.7.16.1 and the dielectric withstanding voltage test shall be performed as specified in 4.7.17.1.

4.7.7 Insert retention (see 3.6.6). Insert faces of unmated connectors shall be tested in accordance with, test procedure EIA-364-35, to a pressure of 45 psig (310 kPa).

4.7.8 Salt spray (corrosion) (see 3.6.7). Unmated connectors shall be tested in accordance with, test procedure EIA-364-26. The following detail and exceptions shall apply:

a. Condition B.

b. The samples shall not be mounted, but shall be suspended using waxed twine (or string), glass rods, or glass cord.

4.7.9 Contact resistance (see 3.6.8). Contact resistance shall be measured in accordance with, test procedure EIA-364-06. Twenty percent, but not less than three contacts of the mated connectors, shall be tested. The following details and exceptions shall apply:

a. Test sample preparation shall be in accordance with EIA-364-06.

b. Wire size and type: See table VII and 4.5.1.

c. Test current shall be as specified herein.

d. Millivolt drop: See table III.

e. Preconditioning and special environment: Samples shall be tested a +25°C and +200°C.

4.7.10 Gauge location (see 3.6.9). Applicable test gauges shall be installed in three randomly selected cavities of each contact size in each connector. With the gauges fully seated against the contact retention device, the axial location of the front of the gauges shall be measured relative to the reference plane indicated on front of the gauges shall be measured relative to the reference plane as specified on figure 1 or figure 2, as applicable.

4.7.11 Pin contact stability (see 3.6.10). Ten percent of the pin contact cavities of each size in each unmated connector shall be subjected to this test. Test gauges as specified on figure 5 shall be installed in the connector and the connector held rigidly in a suitable fixture. A moment shall be applied to the exposed rod as specified on figure 7. The rate of moment application shall not exceed 1 pound inch (0.113 Nm) per minute. The total pin tip displacement shall be measured as specified on figure 7.

4.7.12 Gauge retention (see 3.6.11). Applicable test gauges as specified on figure 5 or figure 6, shall be installed in three randomly selected cavities in each connector, with the accessory rear hardware removed. The axial load specified in table V shall be applied at a rate of 1 pound (0.45 kg) per second until the specified load has been reached. Gauge displacement shall be measured with respect to the connector shell after an initial load of 2 pounds (0.91 kg) has been applied to assure that all slack has been taken up.

4.7.13 Magnetic permeability (see 3.6.12). The wired, assembled, and fully mated connectors shall be checked for relative permeability with an indicator in accordance with ASTM A342/A342M.

4.7.14 Contact retention (see 3.6.13). The contact retention shall be tested as specified in test procedure EIA-364-29. An axial load, as specified in table V, shall be applied to 20 percent of the contacts in unmated connectors as specified in 4.5b. A preload of 3 pounds (1.36 kg) maximum shall be initially applied to fully seat the contacts. Connectors shall have all contacts in place during the test.

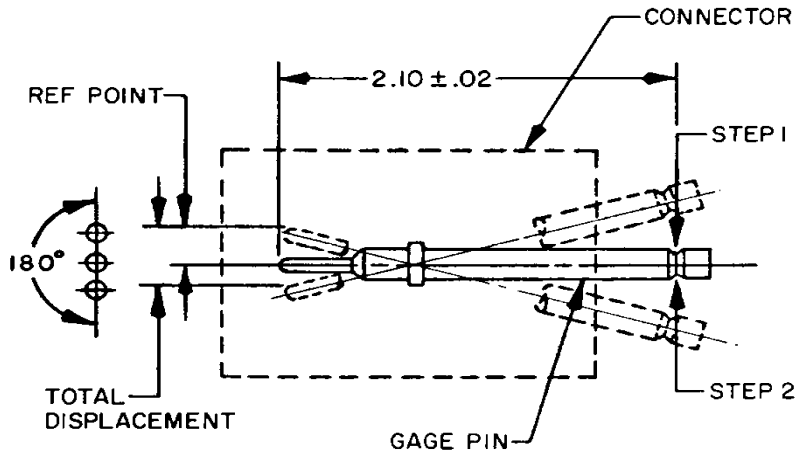

Step 1: Apply moment to determine reference point.
Step 2: Apply moment in opposite direction (180°) and measure total displacement.

Contact Size	Moment pound inch (Nm)
22D	1 (0.113)
20	1.5 (0.169)
16	2 (0.226)
12	2 (0.226)

FIGURE 7. Pin contact stability test.

4.7.15 Altitude - low temperature (see 3.6.14). Connectors shall be conditioned in a dry oven at a temperature of 50°C ±5°C for at least 8 hours. Wired, mated assembled connectors in a continuous loop circuit shall be placed in a chamber that will simulate actual service usage. A suitable method must be made to energize the connector between shell and contacts.

a. Reduce the chamber internal temperature to -54°C +4°C, -0°C and maintained until the specimen stabilizes.

b. Reduce the chamber internal pressure to simulate an altitude of 80,000 feet (24.4 km).

c. Maintain the above temperature and pressure for 1 hour minimum.

d. Energize the connector between the connector shell and all contacts using 625 volts rms, 60 Hz

for 1 minute minimum. There shall be no dielectric breakdown.

e. With the test voltage removed, increase the chamber internal pressure and temperature to standard ambient conditions and allow the specimen to stabilize.

f. Perform dielectric withstanding voltage and insulation resistance tests of 4.7.17.1 and 4.7.16.1 respectively. (The continuous loop circuit may be opened for these tests). The connectors shall remain mated during the test.

4.7.16 Insulation resistance.

4.7.16.1 At ambient temperature (see 3.6.15.1). Connectors shall be tested in accordance with test procedure EIA-364-21. For test purposes, the resistance shall be measured separately between the closest pairs of contacts, including those which were inserted and removed 10 times in maintenance aging, and between the shell and the contacts closest to the shell. Each connector shall have a minimum of 50 percent of the contacts subjected to this test. The tolerance of the applied voltage shall be ±10 percent. For conformance inspection, simulated contacts and special techniques may be used in performing this test.

4.7.16.2 At elevated temperature (see 3.6.15.2). The insulation resistance of mated connectors shall be measured in accordance with 3.6.15.1, except the connectors shall have been exposed to an ambient temperature of 200°C ±3°C for a period of 30 minutes. The resistance shall be measured while the connector is at the elevated temperature.

4.7.17 Dielectric withstanding voltage.

4.7.17.1 Dielectric withstanding voltage (see 3.6.16.1). Unmated connectors shall be tested in accordance with test procedure EIA-364-20. Test voltages, as specified in table XI, shall be applied between the closest pairs of contacts and also between the shell and the contacts closest to the shell. Each connector shall have a minimum of 50 percent of its contacts subjected to this test. The specified voltage shall be maintained for 2 seconds minimum. For quality conformance inspection, simulated contacts and special techniques may be used in performing this test.

TABLE XI. Test voltages (ac rms).

Altitude feet (km)	Equivalent pressure (Torr)	Service rating M 1/		Service rating I	
		Mated	Unmated	Mated	Unmated
Sea level	---	1300	1300	1800	1800
50,000 (15.24)	87.5	800	550	1000	600
70,000 (21.34)	35.5	800	350	1000	400
110,000 (33.53)	5.74	800	200	1000	200

1/ For service rating, see 3.1.

4.7.17.2 Dielectric withstanding voltage, altitude (see 3.6.16.2). The mated connectors shall be placed in a suitable chamber at room temperature and tested at the simulated altitudes in table XI starting at sea

level and concluding at 110,000 feet (33.53 km). The test shall be in accordance with test procedure EIA-364-20. Test voltages, as specified in table XI, shall be applied between the closest pair of contacts as well as between the shell and the contacts closest to the shell. Each connector shall have a minimum of 50 percent of its contacts subjected to this test. The specified voltage shall be maintained for 2 seconds minimum. The leads of all test circuits shall be brought out through the walls of the chamber. There shall be no wire splices inside the chamber. The wire ends of all leads shall be unsealed.

4.7.18 Durability (see 3.6.17). Connectors shall be subjected to 500 cycles of mating and unmating at a rate not exceeding 300 cycles per hour. The mating and unmating shall be accomplished in a manner similar to subjection in service. After 500 cycles, the plug and receptacle assemblies shall pass the remaining sequence of tests.

4.7.19 Random vibration (see 3.6.18). Connectors shall be tested in accordance with test procedure EIA-364-28. All contacts shall be wired in series with at least 100 milliamperes of current allowed to flow. The following details shall apply:

a. Monitoring instrumentation: A suitable instrument shall be used to monitor the current flow and to indicate any discontinuity of contacts of interruption of current flow.

b. The number and location of test points.

c. Method of mounting: Similar on figure 8, except the plug and receptacle shall be mounted on a separate adapter plates using the connector's normal mounting provisions and suitable hardware. The adapter plate for the plug shall be attached to the mounting bracket. The adapter for the receptacle shall be subsequently attached to the plug adapter plate in a manner simulating the normal mated condition.

d. Test condition VI, letter G; time duration 8 hours per axis.

e. Measurements before, during and after test.

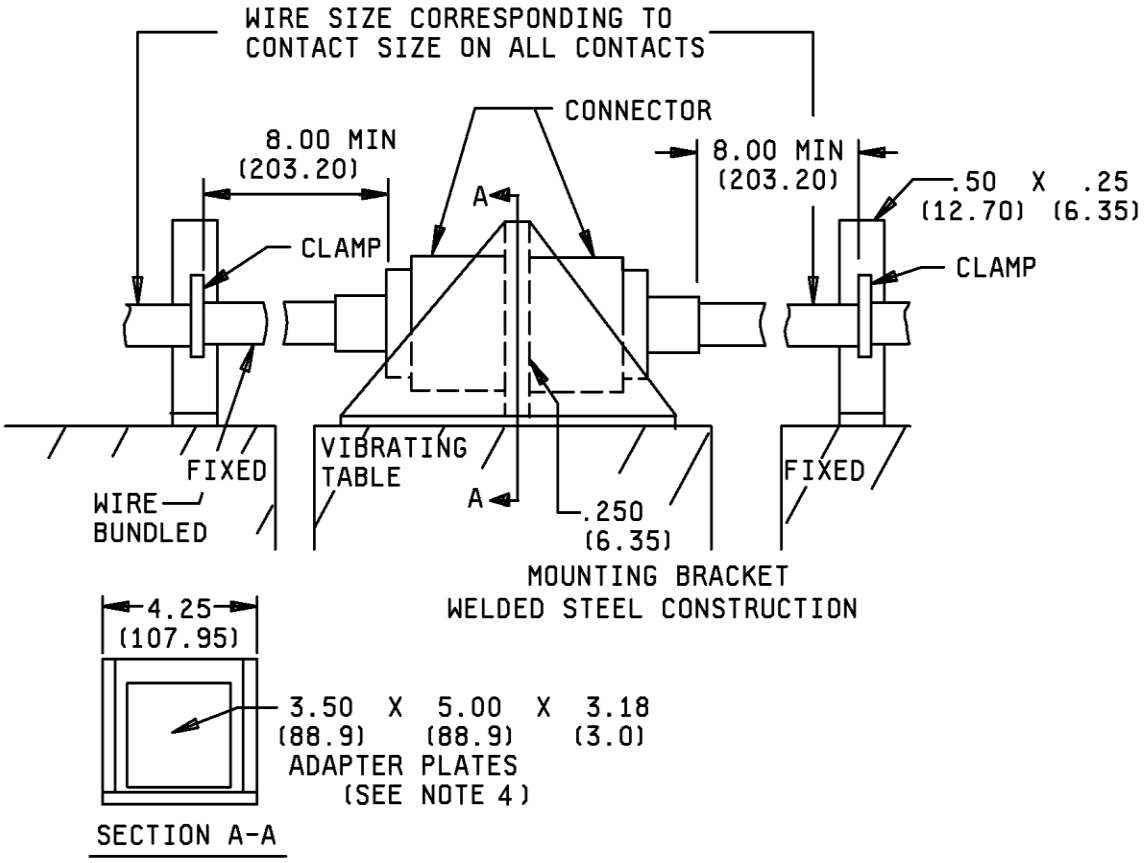

NOTES:
1. Dimensions are in inches.
2. Metric equivalents are given for general information only.
3. Metric equivalents are in parenthesis.
4. Cable to panel mounting requires a single adapter plate.
5. Unless otherwise specified, dimensions are for reference.

FIGURE 8. Vibration testing equipment.

4.7.20 Shock (specified pulse) (see 3.6.19). Wired connectors shall be tested in accordance with test procedure EIA-364-27, condition A. Receptacles shall be mounted by a method similar to the vibration tests on the shock device or carriage. Plugs shall be engaged with the receptacles. The connectors shall be fully wired and the wired bundle or cable clamped to points that move with the connector. A minimum of 8 inches (203.2 mm) of wire or cable shall be unsupported behind the rear of each connector.

4.7.21 Humidity (see 3.6.20). Wired, mated connectors shall be tested in accordance with test procedure EIA-364-31. The following details and exceptions shall apply:

a. Polarized voltage: Not required.

b. Wired and mated connectors: As specified in 4.5.b.

c. Test type II, omitting step 7b.

d. Initial measurements: None. No dip loops in wire or wire splices in chamber. Wires shall be brought out of the chamber through vapor-tight seals.

e. Final measurements: After a minimum of 3 hours at step 7a of the final cycle and while the connectors are still subjected to high humidity, the insulation resistance shall be measured when the chamber temperature reaches 20°C ±5°C and condensation is observed on the connector.

4.7.22 Ozone exposure (see 3.6.21). Ozone exposure shall be conducted in accordance with test procedure EIA-364-14. The standard details shall apply.

4.7.23 Fluid immersion (see 3.6.22). Connector samples shall be subjected to the test specified in test procedure EIA-364-10 (one sample per fluid). After testing, connectors shall be visually inspected (no magnification) for cracks and tears which may affect remaining tests in the test sequence. Connectors shall then be mated and unmated, or unmated and mated, depending on fluid immersion test conditions. Samples shall be subjected to the fluids specified in test procedure EIA-364-10, as specified in table XII herein.

TABLE XII. Fluid immersion.

Sample Number	Test procedure EIA-364-10 test fluid
1	d
2	e
3	a
4	b
5	f
6	g
7	c
8	l
9	h
10	i
11	j
12	k

4.7.23.1 Retention system fluid exposure (see 3.6.22.1). Connectors shall be unmated and contacts shall be removed. Connectors shall be immersed in the test fluids in table XII (one sample per fluid) for 20 hours at room temperature. After removal, fluids shall be drained from all recesses. Connectors shall remain in free air for 4 hours minimum and the contacts shall be reinstalled.

4.7.24 Contact insertion and removal forces (see 3.6.23). Contact insertion and removal forces shall be measured in accordance with test procedure EIA-364-05, using tools specified in 3.5.1.1.

4.7.25 Contact walkout (see 3.6.26). Two contacts in each plug and receptacle shall be tested. The contacts shall be crimped to stranded steel cable of an appropriate size and installed in the connector. The unmated connector shall be mounted in a test fixture as specified on figure 9. A 3 pound (13.3 N) load shall be applied to the cable. One 360 degree rotation of the fixture shall constitute 1 cycle. The connector shall be subjected to 100 cycles at a rate of 10 to 20 cycles per minute.

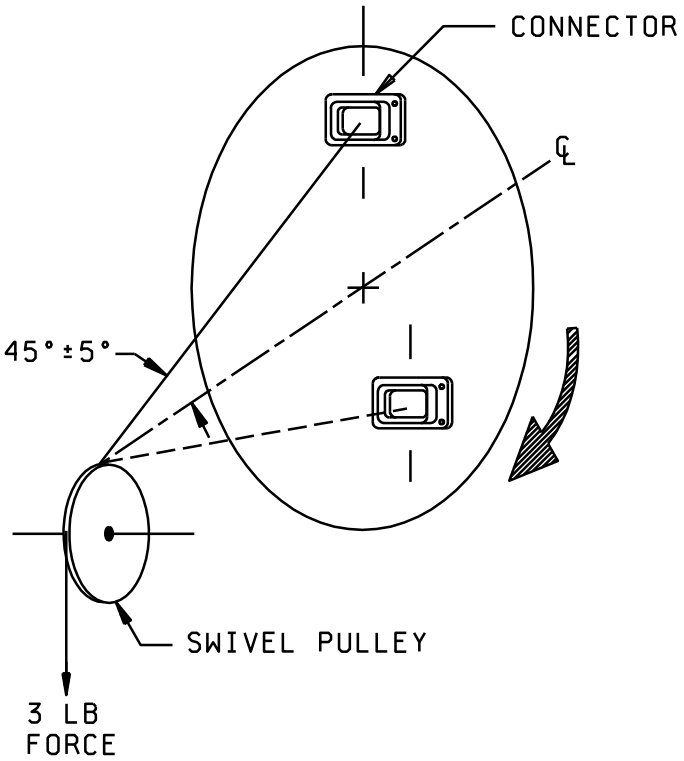

FIGURE 9. Contact walkout test setup.

4.7.26 Insertion removal tool abuse (see 3.6.27). Five contact cavities of each size in each connector shall be subjected to each of the following tests. Different contact cavities shall be used for each test. Should a tool become damaged during any of the testing, it shall be replaced. Failure of a tool shall not constitute a test failure.

a. Removal tool rotation. The applicable contact removal tool shall be inserted as if to remove a contact and an axial load of 3 pounds (13.3 N) shall be applied. With the force applied, the tool shall be rotated 180 degrees and then removed, also removing the contact. The contact shall be reinserted. These steps shall be repeated three times on each of the five contacts selected.

b. Insertion tool rotation. The contact shall first be removed. With the applicable contact insertion tool, the contact shall be reinserted and an axial load of 3 pounds (13.3 N) applied to the tool. With the force applied, the tool shall be rotated 180 degrees and then removed. These steps shall be repeated three times on each of the five contacts selected.

c. Insertion tool thrust. The contact shall first be removed. With the applicable contact insertion tool, the contact shall be reinserted and an axial load of 10 pounds (44.5 N) applied to the tool. These steps shall be performed only once on each of the five contacts selected. A new tool shall be used for each contact.

d. Removal tool thrust. The applicable contact removal tool shall be inserted as if to remove the contact and an axial load of 10 pounds (44.5 N) shall be applied to the tool. The tool shall then be removed, also removing the contact. These steps shall be performed only once on each of the five contacts selected. A new tool shall be used for each contact.

4.7.27 Temperature life with contact loading (see 3.6.28). Temperature life shall be tested in accordance with test procedure EIA-364-17. The following details and exceptions shall apply:

a. Test condition for chamber and connector temperature and length of test - Condition 6, test time condition D for qualification inspection: letter B for periodic inspection.

b. Load conditions (electrical): 100 ±10 milliamperes at 10 volts dc maximum.

c. Special fixturing and mounting: See figure 10.

d. Observations or measurements: Discontinuities in excess of 1 microsecond during test. After return to ambient temperature, the connectors shall be unmated and the contact locations measured with approximately 2 pounds (8.9 N) axial load applied to seat the contacts against the retention device.

e. Periodic inspection: Discontinuity as in d.

f. Number of samples: One pair of contacts per sample.

g. Sample preparation: Connector samples shall have one mating pair of contacts removed and replaced with contacts crimped to stranded steel cable or steel-cored copper wire (Copper weld or equivalent) of an appropriate size. The axial location of these contacts shall be measured for as specified on figure 1 or figure 2, as applicable, with a load of approximately 2 pounds (0.91 kg) to seat the contacts against the retention device. A weight equal to 50 percent of the axial load specified in table V for the applicable contact size shall be suspended freely from each steel wire.

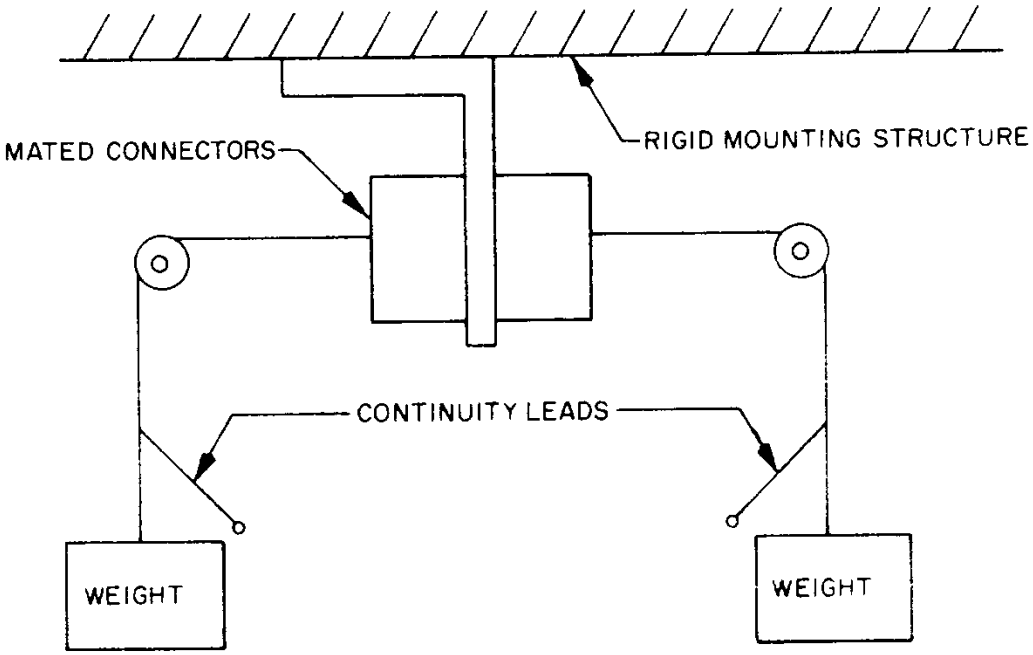

FIGURE 10. Fixturing for temperature life with contact loading.

4.7.28 Thermal vacuum out-gassing (class S) (see 3.6.24). All nonmetallic materials including lubrication used in the manufacturing of these connectors shall be tested in accordance with ASTM E595 to determine the maximum TML of the original specimen mass and the VCM content of the original specimen mass. For the purpose of determining TML and VCM of connectors, the original specimen mass shall be the assembled connector mass excluding metallic parts. The TML and VCM for the connectors may be determined by testing the specific materials of the connector and calculating the loss for the connector.

4.7.29 Flammability, odor, and toxicity (class S) (see 3.6.25). Complete connector assemblies, one connector with protective cap and one fully mated connector pair shall meet the requirements of NHB 8060.1.

4.7.30 Post test inspection. The tested connectors shall be inspected to determine the effects of previous testing. Any evidence of cracking, loosening of parts, carbon tracking, excess wear, tearing of grommet seals, resilient interface material, peripheral seals, or missing parts shall be recorded.

5. PACKAGING

5.1 Packaging requirements. For acquisition purposes, the packaging requirements shall be as specified in the contract or order (see 6.2). When packaging of materiel is to be performed by DoD or in-house contractor personnel, these personnel need to contact the responsible packaging activity to ascertain packaging requirements. Packaging requirements are maintained by the Inventory Control Point's packaging activities within the Military Service or Defense Agency, or within the Military Service's system commands. Packaging data retrieval is available from the managing Military Department's or Defense Agency's automated packaging files, CD-ROM products, or by contacting the responsible packaging activity.

6. NOTES

(This section contains information of a general or explanatory nature that may be helpful, but is not mandatory.)

6.1 Intended use. These connectors and contacts are military unique because they are intended for use in applications wherein extremes of temperature (-60°C to +200°C), humidity (90 to 95 percent for 96 hours), and barometric pressure 110,000 feet (33.53 km) are experienced. They are not intended for use at operating temperatures higher than +200°C for extended periods.

6.2 Acquisition requirements. Acquisition documents must specify the following:

a. Title, number, and date of this specification.

b. Packaging requirements (see 5.1).

c. Title, number, and date of the applicable specification sheet and the complete PIN (see 3.1).

d. Quantity of units per package, if other than one.

6.3 Qualification. With respect to products requiring qualification, awards will be made only for products which are, at the time of award of contract, qualified for inclusion in Qualified Products List QPL No. 83733 whether or not such products have actually been so listed by that date. The attention of the contractors is called to these requirements, and manufacturers are urged to arrange to have the products that they propose to offer to the Federal Government tested for qualification in order that they may be eligible to be awarded contracts or orders for the products covered by this specification. Information pertaining to qualification of products may be obtained from (DLA Land and Maritime -VQ), Document Control Unit, Columbus, OH 43218-3990 or email vqchief@dla.mil. An online listing of products qualified to this specification may be found in the Qualified Products Database (QPD) at https://assist.dla.mil.

6.4 Definitions. For purposes of this specification, the following definitions should apply:

6.4.1 Connector assembly. A complete connector assembly consists of a mated plug and receptacle.

6.4.2 Receptacle. A connector receptacle is that portion of the connector assembly which is normally "fixed" that is rigidly attached to a supporting surface. It will be provided with pin or socket contacts.

6.4.3 Plug. A connector plug is that portion of the connector assembly, which is normally "removable". The plug will be provided with pin or socket contacts.

6.5 Interchangeability. All complete connectors, including their complement of pin or socket contacts;

having the same PIN will be completely interchangeable with each other with respect to installation (physical) and performance (function) as specified herein. Suitable evidence, such as dimensional data, may be required by the Government in order to assure that complete connector assemblies will be interchangeable and meet the requirements of this specification.

6.5.1 Removable contacts. All pins and sockets will be capable of being assembled in the molded inserts (see 3.1) and be completely interchangeable with each other with respect to installation (physical) and performance (function) as specified herein. Tools will be capable of properly inserting and removing the pin and socket contacts from the molded inserts. Suitable evidence such as dimensional data may be required by the Government in order to assure that pins and sockets will be interchangeable and meet the requirements of this specification.

6.5.2 Plugs and receptacles. Plugs and receptacles of a given size and design manufactured by one source to the requirements of this specification, will be capable of mating with associated plugs and receptacles manufactured to the requirements of this specification by other sources.

6.6 Subject term (key word) listing.

Backplate
Contact
Copper
Insert
Magnetic permeability
Nickel
Plug
Receptacle
Sealing plug
Shell
Shielded
Silver

6.7 Amendment notations. The margins of this specification are marked with vertical lines to indicate modifications generated by this amendment. This was done as a convenience only and the Government assumes no liability whatsoever for any inaccuracies in these notations. Bidders and contractors are cautioned to evaluate the requirements of this document based on the entire content irrespective of the marginal notations.

CONCLUDING MATERIAL

Custodians:
Air Force - 85
DLA - CC

Review activity:
Air Force - 99

Preparing activity:
DLA - CC

(Project 5935-2018-040)

NOTE: The activities listed above were interested in this document as of the date of this document. Since organizations and responsibilities can change, you should verify the currency of the information above using the ASSIST Online database at https://assist.dla.mil.