INCH-POUND

MIL-DTL-83723/92D
w/AMENDMENT 2
12 March 2024
SUPERSEDING
MIL-DTL-83723/92D
w/AMENDMENT 1
6 December 2017

DETAIL SPECIFICATION SHEET

CONNECTORS, ELECTRICAL, CIRCULAR, ENVIRONMENT RESISTING, PLUG, RFI, THREADED COUPLING, CRIMP PIN CONTACT, SERIES III, CLASSES G, M, R, T, W AND Z

This specification is approved for use by all Departments and Agencies of the Department of Defense.

The requirements for acquiring the product described herein shall consist of this specification sheet and MIL-DTL-83723.

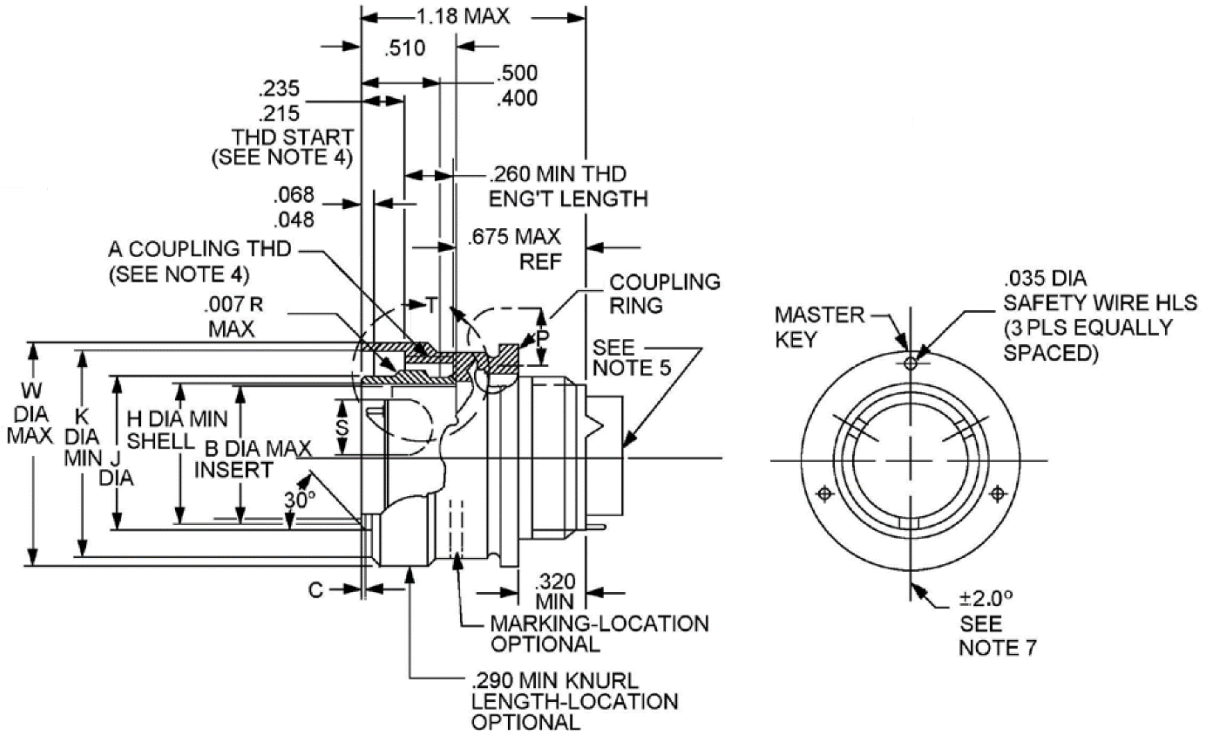

FIGURE 1. Dimensions and configurations.

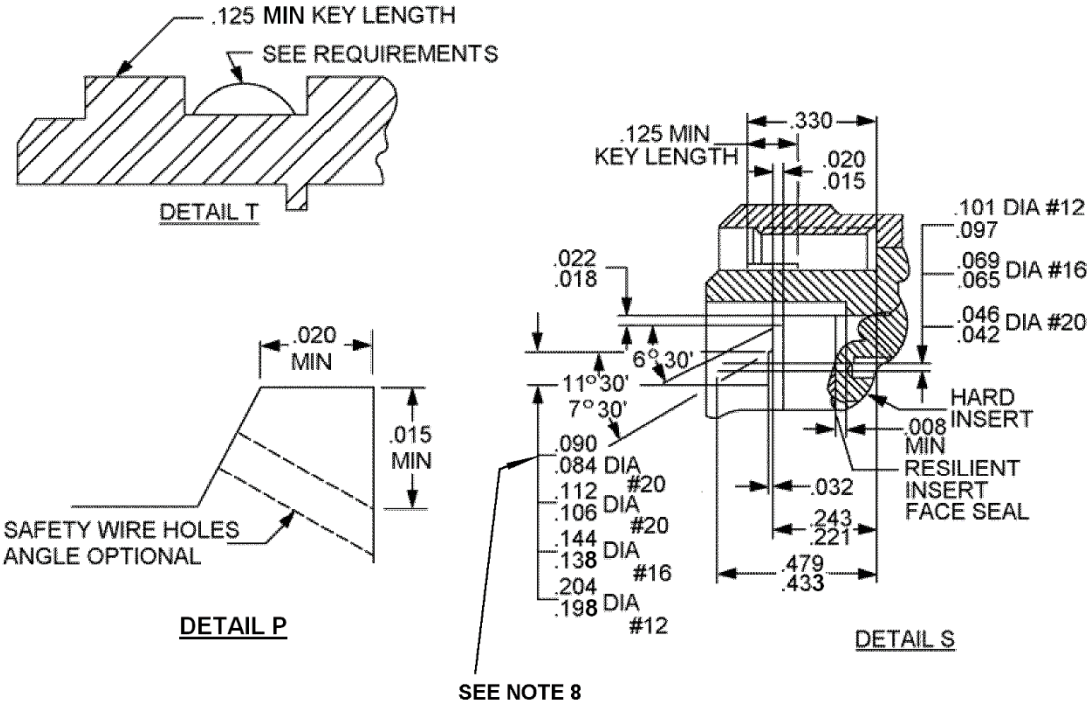

FIGURE 1. Dimensions and configurations - Continued.

Shell size	A Thread UNEF-2B	B	C	H min	J	K dia min	W dia max
08	.5625-24	.290 (7.37)	.025 (.64)	.294 (7.47)	.405 (10.29) .396 (10.06)	.575 (14.61)	.776 (19.71)
10	.6875-24	.388 (9.86)	.031 (.79)	.428 (10.87)	.526 (13.36) .517 (13.13)	.707 (17.96)	.906 (23.01)
12	.875-20	.558 (14.17)		.598 (15.19)	.696 (17.68) .687 (17.45)	.895 (22.73)	1.078 (27.38)
14	.9375-20	.627 (15.93)		.667 (16.94)	.765 (19.43) .756 (19.20)	.957 (24.31)	1.141 (28.98)
16	1.0625-18	.772 (19.61)		.794 (20.17)	.892 (22.66) .883 (22.43)	1.084 (27.53)	1.266 (32.16)
18	1.1875-18	.860 (21.84)		.900 (22.86)	.998 (25.35) .989 (25.12)	1.209 (30.71)	1.375 (34.93)
20	1.3125-18	.985 (25.02)		1.025 (26.04)	1.123 (28.52) 1.114 (28.30)	1.334 (33.88)	1.510 (38.35)
22	1.4375-18	1.110 (28.19)		1.150 (29.21)	1.248 (31.70) 1.239 (31.47)	1.459 (37.06)	1.625 (41.28)
24	1.5625-18	1.235 (31.37)		1.275 (32.39)	1.373 (34.87) 1.364 (34.65)	1.584 (40.23)	1.760 (44.70)

FIGURE 1. Dimensions and configurations - Continued.

NOTES:

1. Dimensions are in inches.
2. Metric equivalents are given for information only.
3. Unless otherwise specified, tolerances are ± .005 (0.13 mm) for three place decimals and ± .01 (0.25 mm) for two place decimals and ± 1° for all angles.
4. The dimensions showing the relationship between the coupling ring and shell apply only when the coupling ring is in the fully forward position.
5. Rear accessory interchangeability dimensions shall be in accordance with MIL-DTL-83723.
6. Shell size 8 will not mate with MIL-DTL-26500 connectors.
7. The centerline of indicated projection must be located on vertical centerline ± 2°.
8. See table I for contact cavities requiring this dimension.

FIGURE 1. Dimensions and configurations - Continued.

REQUIREMENTS:

Dimensions and configurations: See figure 1.

This connector mates with MIL-DTL-83723/82 and MIL-DTL-83723/84.

Insert arrangements and polarizing positions: See MIL-STD-1554 and table I.

TABLE I. Insert arrangements requiring reduced diameters for raised seal barriers on contact cavities.

Shell size	Insert arrangements	Contact cavities
08	03	1, 2, 3
10	06	1, 2, 3, 4, 5, 6

Connector accessories: See SAE-AS85049.

Part or Identifying Number (PIN) example:

M83723/ 92 R 08 03 N

M83723/	Military designation
92	Specification sheet number
R	Class
08	Shell size
03	Insert arrangement
N	Polarizing position

Amendment notations. The margins of this specification are marked with vertical lines to indicate modifications generated by this amendment. This was done as a convenience only and the Government assumes no liability whatsoever for any inaccuracies in these notations. Bidders and contractors are cautioned to evaluate the requirements of this document based on the entire content irrespective of the marginal notations.

Referenced documents. In addition to MIL-DTL-83723, this document references the following:

MIL-STD-1554
MIL-DTL-26500
MIL-DTL-83723/82
MIL-DTL-83723/84
SAE-AS85049

CONCLUDING MATERIAL

Custodians:
Army - CR
Navy - AS
Air Force - 85
DLA - CC

Preparing activity:
DLA - CC

Review activities:
Army - AR, MI
Navy - EC
Air Force - 19, 99

(Project 5935-2024-101)

NOTE: The activities listed above were interested in this document as of the date of this document. Since organizations and responsibilities can change, you should verify the currency of the information above using the ASSIST Online database at https://assist.dla.mil.