INCH-POUND

MIL-DTL-83517/5A
w/AMENDMENT 2
13 March 2025
SUPERSEDING
MIL-DTL-83517/5A
w/AMENDMENT1
21 April 2015

DETAIL SPECIFICATION SHEET

CONNECTOR, RECEPTACLES, ELECTRICAL, COAXIAL, RADIO FREQUENCY, STRIP OR MICROSTRIP TRANSMISSION LINE, SERIES SMA (PIN CONTACT, FLANGE MOUNTED EXTENDED DIELECTRIC)

This specification is approved for use by all Departments and Agencies of the Department of Defense.

The requirements for acquiring the product described herein shall consist of this specification sheet and MIL-DTL-83517.

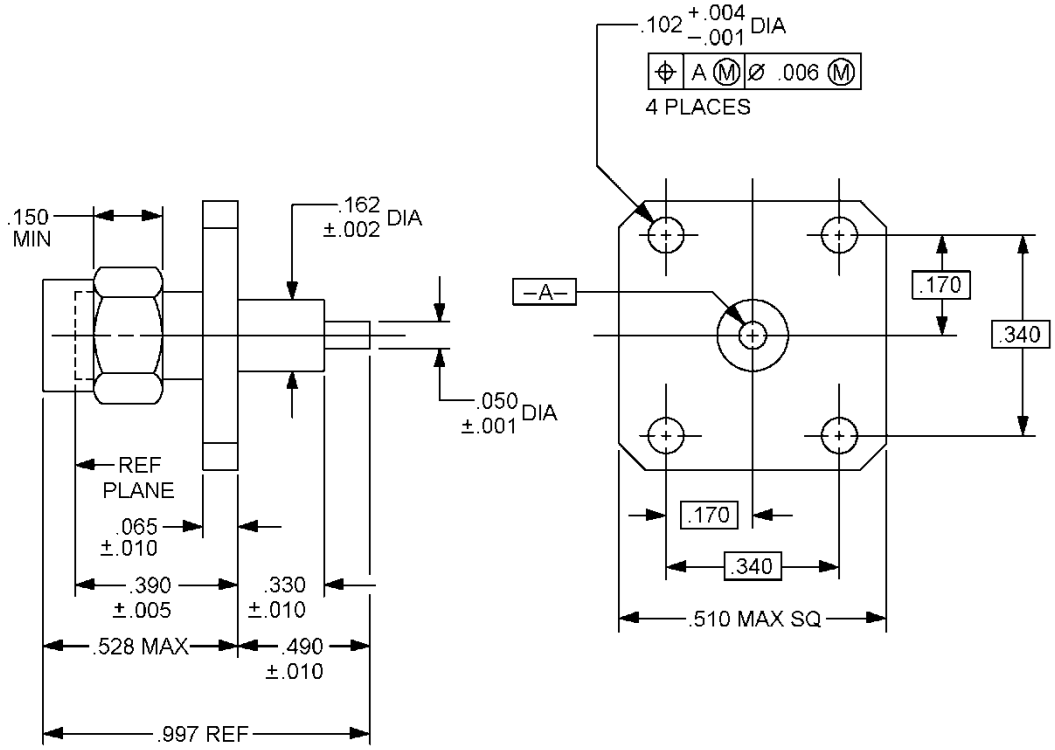

FIGURE 1. Series SMA, pin contact, (4 hole) flange mounted receptacle, extended dielectric.

NOTES:
1. Dimensions are in inches.
2. All undimensioned pictorial configurations are for reference purposes only.
3. Number two screws are suggested for mounting.

FIGURE 1. Series SMA, pin contact, (4 hole) flange mounted receptacle, extended dielectric – Continued.

DISTRIBUTION STATEMENT A. Approved for public release; distribution is unlimited.

ENGINEERING PARAMETERS

Nominal impedance: 50 ohms.

Voltage rating: 335 V rms maximum at sea level.
150 V rms maximum at 70,000 feet.

Frequency range: 0 to 18.0 GHz.

Temperature rating: -65° to 105°C.

REQUIREMENTS

Design and construction: See figure 1, table I and MIL-STD-348.

Force to engage and disengage:

Torque – 2 inch-pounds maximum.
Longitudinal force – Not applicable.

Coupling proof torque: 15 inch-pounds minimum.

Inspection note: For each test of threaded coupling connector where the test is performed on mated pairs, the pairs shall be torqued to 7 to 10 inch-pounds.

TABLE I. Part or Identifying Number (PIN) and characteristics.

PIN M83517/5-	Connector figure no.	Characteristics
31001	1	4 hole flange receptacle, .050 inch diameter terminal

Permeability of nonmagnetic materials: Applicable.

Seal:

Hermetic sealed connectors: Not applicable.
Pressurized and weatherproof connectors: Not applicable.

Insulation resistance: 5,000 megohms minimum in accordance with test procedure EIA -364-21.

Center contact retention:

Axial force: 6 pounds minimum.
Torque: 4 inch-ounces minimum.

Dielectric withstanding voltage: In accordance with test procedure EIA-364-20, test condition I.

Test voltage 1,000 V rms.

Corrosion: In accordance with test procedure EIA -364-26, test condition B.

Voltage standing wave ratio (VSWR): 1.35 +.01F (F in GHz), maximum.

Test frequency range: From .5 to 18.0 GHz. (Using a test method approved by the qualifying activity.)

RF transmission loss: .07√F (F in GHz) tested from 2-18 GHz.

RF leakage: Not applicable.

Connector durability:

Interface:

500 cycles minimum at 12 cycles/minute maximum rate.
Connector shall meet contact gaging and force to engage and disengage requirements.

Contact resistance: In milliohms maximum.

	Initial	After environment
Center contact:	3.0	4.0
Outer contact:	2.0	Not applicable

Thermal shock: Applicable, test condition A.

Moisture resistance: MIL-STD-202-106.

No measurements at high humidity. Insulation resistance shall be at least 200 megohms within 5 minutes after removal from humidity.

RF high potential withstanding voltage:

At a frequency between 5 to 7.5 MHz.
Leakage current – Not applicable.
RF voltage – 670 V rms.

Coupling mechanism retention force: 60 pounds minimum.

PIN: M83517/5-(dash number from table I.)

Amendment notations. The margins of this specification are marked with vertical lines to indicate modifications generated by this amendment. This was done as a convenience only and the Government assumes no liability whatsoever for any inaccuracies in these notations. Bidders and contractors are cautioned to evaluate the requirements of this document based on the entire content irrespective of the marginal notations.

Referenced documents. In addition to MIL-DTL-83517, this document references the following:

MIL-STD-202-106
MIL-STD-348
EIA-364-20
EIA-364-21
EIA-364-26

CONCLUDING MATERIAL

Custodians:
Army – CR
Navy – EC
Air Force – 85
DLA - CC

Review activities:
Army – AR, AT, CR4, MI
Navy – AS, MC, OS, SH

Preparing activity:
DLA – CC

(Project 5935-2025-010)

NOTE: The activities listed above were interested in this document as of the date of this document. Since organizations and responsibilities can change, you should verify the currency of the information above using the ASSIST Online database at https://assist.dla.mil/.