INCH-POUND
MIL-DTL-52525/34C
16 December 2019
SUPERSEDING
MIL-DTL-52525/34B
1 December 2008

DETAIL SPECIFICATION SHEET

FITTINGS, HOSE, SCREW-ON TO 4-BOLT SPLIT-FLANGE, STRAIGHT

This specification is approved for use by all Departments and Agencies of the Department of Defense.

The requirements for acquiring the product described herein shall consist of this specification sheet and MIL-DTL-52525.

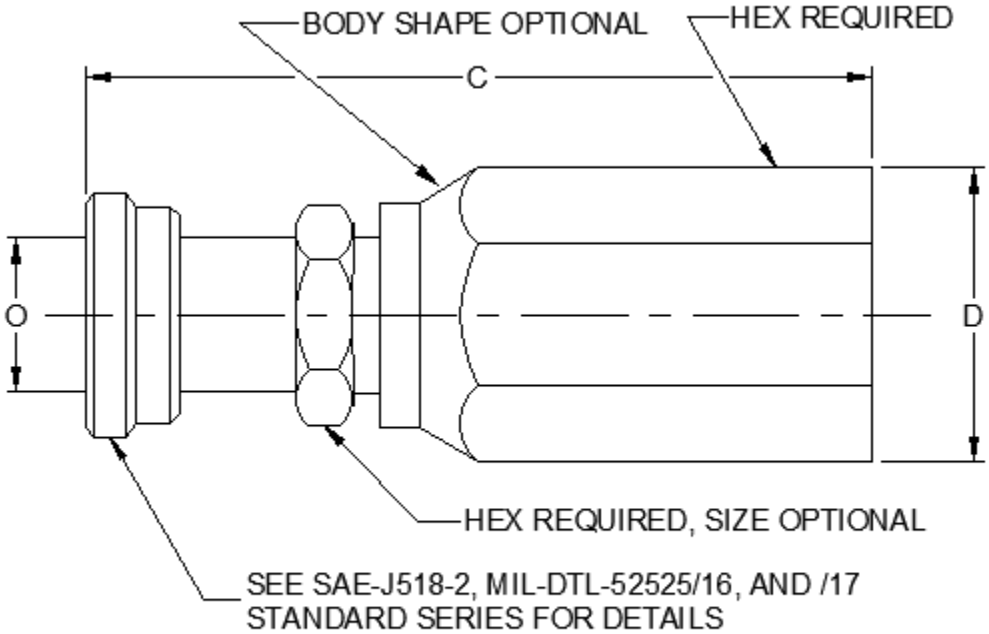

See notes at end of figure.

FIGURE 1. Fitting, screw-on to 4-bolt split-flange, straight.

Part or Identifying Number (PIN)	Hose ID inches (mm)	Hose OD inches (mm)	Tube OD inches (mm)	Flange head
M52525/34-12-12	.75 (19.05)	1.26 (32.00)	.75 (19.05)	.75 (19.05)
M52525/34-16-16	1.00 (25.40)	1.51 (38.35)	1.00 (25.40)	1.00 (25.40)

PIN	A max inches (cm)	C max inches (mm)	D min inches (mm)
M52525/34-12-12	6.00 (15.24)	1.88 (47.75)	.60 (15.24)
M52525/34-16-16	7.00 (17.78)	2.31 (58.67)	.75 (19.05)

NOTES:
1. Dimensions are in inches.
2. Metric equivalents are given for information only.

FIGURE 1. Fitting, screw-on to 4-bolt split-flange, straight - Continued.

REQUIREMENTS:

The fittings described herein are for use with hose in accordance with MIL-DTL-52471/7, type 100RE, 4-spiral-wrap reinforcement hose and hose assemblies in accordance with MIL-DTL-52471/8.

Fittings shall be as specified on figure 1 and in tables I and II.

If fittings are to be used on an oxygen hose, see MIL-DTL-52525.

Materials and finishes shall be in accordance with MIL-DTL-52525 and in table I.

Finish. Finishes shall be in accordance with table I.

All plating's shall be capable of meeting 96-hour salt spray test in accordance with ASTM B117. The fittings shall show no evidence of red corrosion after 96 hours of salt spray. Fluid passages, other openings, and internal threads shall not be subject to the plating thickness requirement and may have bare areas provided they are protected with a light film of oil.

TABLE I. Material and finish identification codes.

PIN code material/plating finish	Material	Plating finish
A	Aluminum alloy 6061 or 7075	Anodize in accordance with MIL-A-8625, type II.
AN		Anodize in accordance with MIL-A-8625, type II and NAVAIR trivalent chromium pretreatment (TCP) in accordance with MIL-DTL-81706, type II, class 1A. TCP Applied after anodizing.
BN		Bare aluminum with NAVAIR TCP in accordance with MIL-DTL-81706, type II, class 1A.
C	Steel 2/	Cadmium plating in accordance with SAE-AMS-C-81562, type II, class 3 or SAE-AMS-QQ-P-416, type II, class 2. 1/ 5/ 8/
YC	Chrome-molybdenum steel alloy 4130	Cadmium plating in accordance with SAE-AMS-C-81562, type II, class 3 or SAE-AMS-QQ-P-416, type II, class 2. 1/ 5/ 8/
G	Steel 2/	Zinc plating with colorless passivate in accordance with ASTM B633, type V, Fe/Zn 25. 3/
YG	Chrome-molybdenum steel alloy 4130	
H	Steel 2/	Zinc phosphate finish in accordance MIL-DTL-16232, type Z, class1.
YH	Chrome-molybdenum steel alloy 4130	
J	Steel 2/	Zinc plating with a colored chromate conversion in accordance with ASTM B633; type II, Fe/Zn 8, or ASTM B695, type II, class 8. 3/ 5/
YJ	Chrome-molybdenum steel alloy 4130	
K	Nickel-copper alloy UNS N04400	No additional finish.
M	High-chromium nickel alloy UNS N06690	No additional finish.
N	Steel 2/	Zinc-aluminum in accordance with ASTM F1136/F1136M, grade 3, NC. 4/
YA	Chrome-molybdenum steel alloy 4130	
YN		Zinc-nickel in accordance with SAE-AMS2417, type 2, grade B. 4/ 7/.
P	Steel 2/	Zinc plating with colorless passivate in accordance with ASTM B633, type V, Fe/Zn 8. 3/ 4/
YP	Chrome-molybdenum steel alloy 4130	
S	Corrosion resistant steel	No additional finish. Passivation in accordance with SAE-AMS2700, type 6 or 7.
T	Titanium	Anodize in accordance with SAE-AMS2488, type 2. 6/ 9/
TF		Fluoride phosphate in accordance with SAE-AMS2486. 6/ 9/
U	Steel 2/	Zinc-aluminum in accordance with ASTM F1136/F1136M, grade 3, NC. 4/
V		Zinc-nickel in accordance with SAE-AMS2417, type 2, grade B. 4/ 7/.
W	Steel 2/	Any zinc plating above. 3/
YW	Chrome-molybdenum steel alloy 4130	
Z	Steel	Zinc plating in accordance with ASTM B695, type II, class 8. 3/ 5/

1/ Embrittlement test need not be run.
2/ All steels except 4130.
3/ Not for use in aircraft. Requires approval from the Program Office for all applications. Zinc-plated materials should be avoided in hydraulic systems with water-glycol fluids. Reference ASTM MNL37 - Fuels and Lubricants Handbook.
4/ Hexavalent chromium free. Finish shall be RoHS compliant.
5/ These finishes have a chromate conversion coating or chromic acid rinse which includes hexavalent chromium and are not recommended. The use of coatings depositing hexavalent chromium for Army vehicles is prohibited unless otherwise explicitly stated in the contract as a requirement.
6/ A pretreatment, a modification of the fluoride treatment, or a post treatment shall be applied so the final color of the fittings shall be similar to SAE-AMS-STD-595 colors 36076 through 36293.
7/ The zinc-nickel alloy plate shall contain 12% to 16% nickel. The coating thickness shall be 315µ inches (8µm) minimum.
8/ Cadmium shall not be used in oxygen or potable water systems. Cadmium is prohibited from use in NAVSEA-owned shipboard systems in accordance with the requirements of T9070-AL-DPC-020/077-2, unless otherwise approved by NAVSEA. The use of cadmium plating for Army vehicles is prohibited unless otherwise explicitly stated in the contract as a requirement.

9/ Titanium shall not be used in oxygen or potable water systems.

The operating pressure shall be as specified in table II. Maximum operating pressures are for low carbon steel fittings consult manufacturer for values on other materials.

TABLE II. Maximum operating pressures of fittings. 1/ 2/

Hose ID inches (mm)	Maximum operating pressure	
	psi	MPa
.75 (19.05)	6250	43.1
1.00 (25.40)	5000	34.5

1/ Dimensions are in inches.
2/ Metric equivalents are given for information only.

PIN: The PIN consists of the letter “M” the specification sheet number, a dash, a number for the hose size a dash, a number for flange size, and a material finish designator.

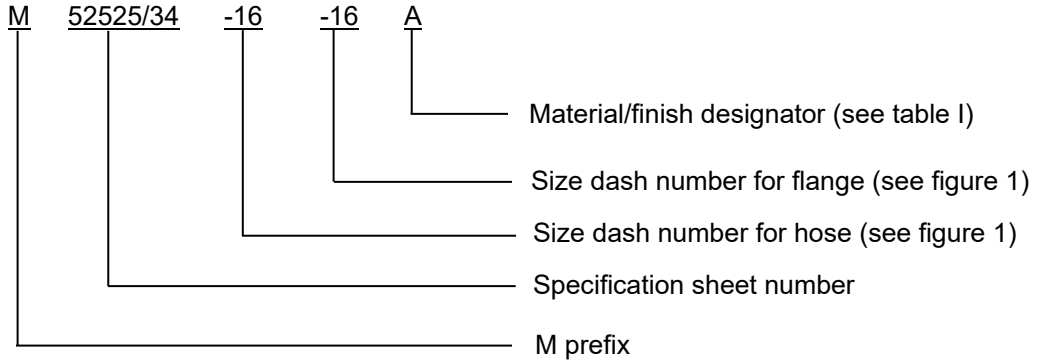

PIN example: M52525/34-16-16A, describes a straight 4-bolt split flange for a 1.00 inch (25.40 mm) hose ID and 1.00 inch (25.40 mm) flange, aluminum with an anodized finish.

To the users of this document, it is recommended that the use of carbon steel material with cadmium plating be used only when the other materials and finishes specified in this document cannot meet performance requirements.

Cadmium is prohibited from use in NAVSEA-owned shipboard systems in accordance with the requirements of T9070-AL-DPC-020/077-2, unless otherwise approved by NAVSEA.

The use of cadmium plating or coatings depositing hexavalent chromium for Army vehicles is prohibited unless otherwise explicitly stated in the contract as a requirement.

Class I and II ozone depleting substances (ODS) shall not be used in MIL-DTL-52525/34 or any referenced procedures.

Referenced documents shall be of the issue in effect on date of invitations for bid.

Color identification. Color identification shall be in accordance with SAE-AS4841.

Marking shall include the manufacturer's name or trademark, size, and hose identifier 100R10. Location of marking is optional.

Harmonization to SAE-J516 cross reference PIN in table III is for reference only. SAE-J516 style fittings may not have the same material/finish as required by MIL-DTL-52525 and legacy with MIL-DTL-52471.

TABLE III. Harmonization to SAE-J516 cross reference PIN. 1/ 2/

Superseded PIN	SAE-J516 Equivalent PIN 2/
M52525/34-12-12	SAE J516 12-12 P490176EE
M52525/34-16-16	SAE J516 16-16 P490176EE

1/ Material and finish designators are omitted from PIN's see table II and SAE-J846.
2/ The "EE" at the end of the SAE PIN is to indicate a nonstandard part.

Changes from previous issue. Marginal notations are not used in this revision to identify changes with respect to the previous issue, due to the extent of the changes.

Referenced documents. In addition to MIL-DTL-52525, this document references the following:

MIL-A-8625
MIL-DTL-16232
MIL-DTL-52471
MIL-DTL-52471/7
MIL-DTL-524718
MIL-DTL-52525/16
MIL-DTL-52525/17
MIL-DTL-81706
ASTM B117
ASTM B633
ASTM B695
ASTM F1136/F1136M
ASTM MNL37
SAE-AMS-STD-595/36076
SAE-AMS-STD-595/36081
SAE-AMS-STD-595/36099
SAE-AMS-STD-595/36118
SAE-AMS-STD-595/36134
SAE-AMS-STD-595/36152
SAE-AMS-STD-595/36170
SAE-AMS-STD-595/36173
SAE-AMS-STD-595/36176
SAE-AMS-STD-595/36231
SAE-AMS-STD-595/36251
SAE-AMS-STD-595/36270
SAE-AMS-STD-595/36280
SAE-AMS-STD-595/36293
SAE-AMS-C-81562
SAE-AMS-QQ-P-416
SAE-AMS2417
SAE-AMS2488
SAE-AMS2486
SAE-AMS2700
SAE-AS4841
SAE-J516
SAE-J518-2
SAE-J846
T9070-AL-DPC-020/077-2

CONCLUDING MATERIAL

Custodians:
Army - AT
Navy - SH
Air Force - 71
DLA - CC

Review activities:
Army - CR4
Navy - AS, CG, SA, YD

Preparing activity:
DLA - CC

(Project 4730-2020-006)

NOTE: The activities listed above were interested in this document as of the date of this document. Since organizations and responsibilities can change, you should verify the currency of the information above using the ASSIST Online database at https://assist.dla.mil.