INCH-POUND
MIL-DTL-52525/3E
20 June 2019
SUPERSEDING
MIL-DTL-52525/3D
21 April 2011

DETAIL SPECIFICATION SHEET

FITTINGS, HOSE, SCREW-ON TO 37 DEGREE FLARE FEMALE SWIVEL, 90 DEGREE BENT TUBE, SHORT DROP

This specification is approved for use by all Departments and Agencies of the Department of Defense.

The requirements for acquiring the product described herein shall consist of this specification sheet and MIL-DTL-52525.

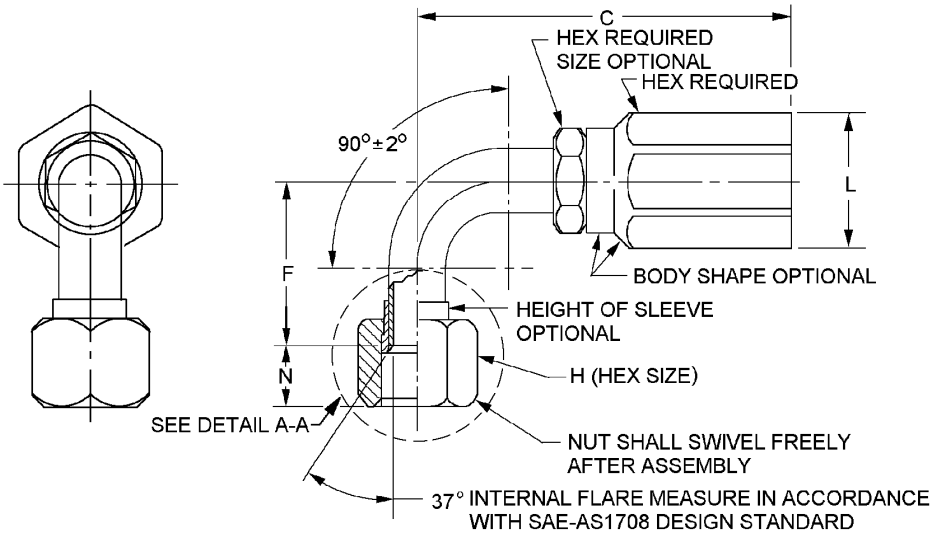

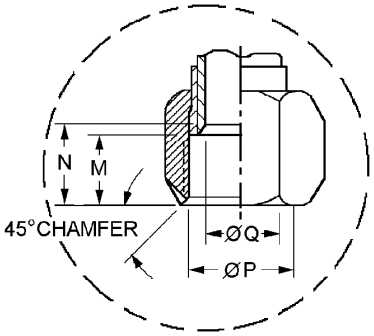

DETAIL A-A

See notes at end of figure.

FIGURE 1. Fitting, screw-on to 37° flare, 90° bent tube, short drop.

Part or Identifying Number (PIN)	Hose		Tube		Thread size (see note 3)	H Hex size inches (mm)
	Dash No.	ID ref inches (mm)	Dash no.	OD inches (mm)		
M52525/3-4-4	4	.250 (6.35)	4	.250 (6.35)	.438-20-UNF	.563 (14.30)
M52525/3-4-5	4	.250 (6.35)	5	.313 (7.95)	.500-20-UNF	.625 (15.88)
M52525/3-6-6	6	.375 (9.53)	6	.375 (9.53)	.563-18-UNF	.688 (17.48)
M52525/3-6-8	6	375 (9.53)	8	.500 (12.70)	.750-16-UNF	.875 (22.23)
M52525/3-8-8	8	.500 (12.70)	8	.500 (12.70)	.750-16-UNF	.875 (22.23)
M52525/3-8-10	8	.500 (12.70)	10	.625 (15.88)	.875-14-UNF	1.000 (25.40)
M52525/3-12-12	12	.750 (19.05)	12	.750 (19.05)	1.063-12-UNC	1.250 (31.75)
M52525/3-16-16	16	1.000 (25.40)	16	1.000 (25.40)	1.313-12-UNC	1.500 (38.10)

PIN	C max inches (mm)	F max inches (mm)	L max inches (mm)	M min inches (mm)	N inches (mm) +.030 (0.76) -.015 (0.38)
M52525/3-4-4	3.00 (76.20)	.74 (18.80)	.89 (22.61)	.300 (7.62)	.344 (8.74)
M52525/3-4-5	2.80 (71.12)	.81 (20.57)	1.00 (25.40)	.331 (8.41)	.375 (9.53)
M52525/3-6-6	3.32 (84.33)	.91 (23.11)	1.19 (30.23)	.333 (8.46)	.375 (9.53)
M52525/3-6-8	3.49 (8.86)	1.15 (29.21)	1.19 (30.23)	.375 (9.53)	.422 (10.72)
M52525/3-8-8	3.65 (92.71)	1.15 (29.21)	1.24 (31.50)	.375 (9.53)	.422 (10.72)
M52525/3-8-10	3.87 (98.30)	1.29 (32.77)	1.24 (31.50)	.461 (11.71)	.500 (12.70)
M52525/3-12-12	4.41 (112.01)	1.88 (47.75)	1.75 (44.45)	.469 (11.91)	.562 (14.27)
M52525/3-16-16	5.31 (134.87)	2.20 (55.88)	2.05 (52.07)	.563 (14.30)	.594 (15.09)

See notes at end of figure.

FIGURE 1. Fitting, screw-on to 37° flare, 90° bent tube, short drop - Continued.

PIN	P (see note 4) inches (mm) ±.005 (0.13)	Q min bore dia. inches (mm)
M52525/3-4-4	.295 (7.49)	.11 (2.79)
M52525/3-4-5	.355 (9.02)	.11 (2.79)
M52525/3-6-6	.435 (11.05)	.26 (6.60)
M52525/3-6-8	.570 (14.48)	.38 (9.65)
M52525/3-8-8	.570 (14.48)	.38 (9.65)
M52525/3-8-10	.680 (17.27)	.38 (9.65)
M52525/3-12-12	.850 (21.59)	.57 (14.48)
M52525/3-16-16	1.00 (25.40)	.78 (19.81)

NOTES:
1. Dimensions are in inches.
2. Metric equivalents are given for information only.
3. Threads shall be in accordance with ASME B1.1 series with graded pitches fine (UNF) and series with constant pitches (UNC), class 2B.
4. Dimension P to be concentric with dimension Q within .015 Inches (0.38 mm) full indicator movement.
5. All dimensions not shown shall be in accordance with SAE-J516.
6. These fittings are similar to SAE-J516 type for use with SAE-J517, type 100R2 hose.

FIGURE 1. Fitting, screw-on to 37° flare, 90° bent tube, short drop - Continued.

REQUIREMENTS:

Fittings shall be as specified on figure 1 and in tables I, II, and III.

The fittings described herein are for use with MIL-DTL-52471/5, SAE-J517, type 100R2 hose, which is high pressure double steel wire braid reinforced and MIL-DTL-52471/2 hose assemblies.

If fittings are to be used on an oxygen hose, see MIL-DTL-52525.

Materials and finishes shall be in accordance with MIL-DTL-52525 and in table I.

Finish. Finishes shall be in accordance with table I. All plating's shall be capable of meeting 96-hour salt spray test in accordance with ASTM B117. The fittings shall show no evidence of red corrosion after 96 hours of salt spray. Fluid passages, other openings, and internal threads shall not be subject to the plating thickness requirement and may have bare areas provided they are protected with a light film of oil.

TABLE I. Material and finish identification codes.

PIN code material/plating finish	Material	Plating finish
A	Aluminum alloy 6061 or 7075	Anodize in accordance with MIL-A-8625, type II.
AN		Anodize in accordance with MIL-A-8625, type II and NAVAIR trivalent chromium pretreatment (TCP) in accordance with MIL-DTL-81706, type II, class 1A. TCP Applied after anodizing.
BN		Bare aluminum with NAVAIR TCP in accordance with MIL-DTL-81706, type II, class 1A.
C	Steel 2/	Cadmium plating in accordance with SAE-AMS-C-81562, type II, class 3 or SAE-AMS-QQ-P-416, type II, class 2. 1/ 8/
YC	Chrome-molybdenum steel alloy 4130	Cadmium plating in accordance with SAE-AMS-C-81562, type II, class 3 or SAE-AMS-QQ-P-416, type II, class 2. 1/ 8/
G	Steel 2/	Zinc plating with colorless passivate in accordance with ASTM B633, type VI, Fe/Zn 8. 3/
YG	Chrome-molybdenum steel alloy 4130	
H	Steel 2/	Zinc phosphate finish in accordance MIL-DTL-16232, type Z, class1.
YH	Chrome-molybdenum steel alloy 4130	
J	Steel 2/	Zinc plating with a colored chromate conversion in accordance with ASTM B633; type II or III, Fe/Zn 8, or ASTM B695, type II, class 8. 3/ 5//
YJ	Chrome-molybdenum steel alloy 4130	
K	Nickel-copper alloy UNS N04400	No additional finish.
M	High-chromium nickel alloy UNS N06690	No additional finish.
N	Steel 2/	Zinc-aluminum in accordance with ASTM F1136/F1136M, grade 3, NC. 4/
YA	Chrome-molybdenum steel alloy 4130	
YN		Zinc-nickel in accordance with SAE-AMS2417, type 2, grade B. 4/ 7/
P	Steel 2/	Zinc plating with colorless passivate in accordance with ASTM B633, type V, Fe/Zn 8. 3/
YP	Chrome-molybdenum steel alloy 4130	
S	Corrosion resistant steel	No additional finish. Passivation in accordance with SAE-AMS2700, type 6 or 7.
T	Titanium	Anodize in accordance with SAE-AMS2488, type 2. 6/ 9/
TF		Fluoride phosphate in accordance with SAE-AMS2486. 6/ 9/
U	Steel 2/	Zinc-aluminum in accordance with ASTM F1136/F1136M, grade 3, NC. 4/
V		Zinc-nickel in accordance with SAE-AMS2417, type 2, grade B. 4/ 7/
W	Steel 2/	Any zinc plating above.
YW	Chrome-molybdenum steel alloy 4130	
Z	Steel	Zinc plating in accordance with ASTM B695, type II, class 8. 3/ 5/

1/ Embrittlement test need not be run.
2/ All steels except 4130.
3/ Not for use in aircraft. Requires approval from the Program Office for all applications. Zinc-plated materials should be avoided in hydraulic systems with water-glycol fluids. Reference ASTM MNL37 - Fuels and Lubricants Handbook.
4/ Hexavalent chromium free. Finish shall be RoHS compliant.
5/ These finishes have a chromate conversion coating or chromic acid rinse which includes hexavalent chromium and are not recommended.
6/ A pretreatment, a modification of the fluoride treatment, or a post treatment shall be applied so the final color of the fittings shall be similar to SAE-AMS-STD-595 colors 36076 through 36293.
7/ The zinc-nickel alloy plate shall contain 12% to 16% nickel. The coating thickness shall be 315µ inches (8µm) minimum.

8/ Cadmium shall not be used in oxygen or potable water systems. Cadmium is prohibited from use in NAVSEA-owned shipboard systems in accordance with the requirements of T9070-AL-DPC-020/077-2, unless otherwise approved by NAVSEA.

9/ Titanium shall not be used in oxygen or potable water systems.

Maximum operating pressure shall be as specified in table II.

TABLE II. Maximum operating pressures of fittings. 1/ 2/

SAE dash size	Hose ID inches (mm)	Steel, CRES, titanium, nickel-copper alloy, and high-chromium nickel		Aluminum	
		psi	MPa	psi	MPa
-4	.250 (6.35)	4500	31	3000	21
-5	.313 (7.95)	4000	27.5	3000	21
-6	.375 (9.53)	4000	27.5	3000	21
-8	.500 (12.70)	4000	27.5	3000	21
-10	.625 (15.88)	3000	21	3000	21
-12	.750 (19.05)	3000	21	3000	21
-16	1.000 (25.40)	2500	17	1500	10.5
-20	1.250 (31.75)	2000	14	1000	7
-24	1.500 (38.10)	1500	10.5	1000	7
-32	2.000 (50.80)	1125	8	600	4

1/ Dimensions are in inches.
2/ Metric equivalents are given for information only.

Over tightening torque shall be as specified in table III.

TABLE III. Over-tightening torque for swivel nut. 1/ 2/

SAE dash size	Hose ID ref inches (mm)	Torque values for steel, CRES, titanium, nickel-copper alloy, and high-chromium nickel		Torque values for aluminum	
		Pound-force Inches (lb-in)	N m	Pound-force Inches (lb-in)	N m
-4	.250 (6.35)	135	15	140	16
-5	.313 (7.95)	230	26	180	20
-6	.375 (9.53)	276	31	195	22
-8	.500 (12.70)	450	51	350	40
-10	.625 (15.88)	735	83	430	49
-12	.750 (19.05)	900	102	550	62
-16	1.000 (25.40)	1200	136	840	95
-20	1.250 (31.75)	1900	215	1020	115
-24	1.500 (38.10)	2700	305	1080	122
-32	2.000 (50.80)	4000	452	2000	226

1/ Dimensions are in inches.
2/ Metric equivalents are given for information only.

PIN: The PIN consists of the letter “M” the specification sheet number, a dash, a number for hose size, a dash, a number for tube size, and a material finish designator.

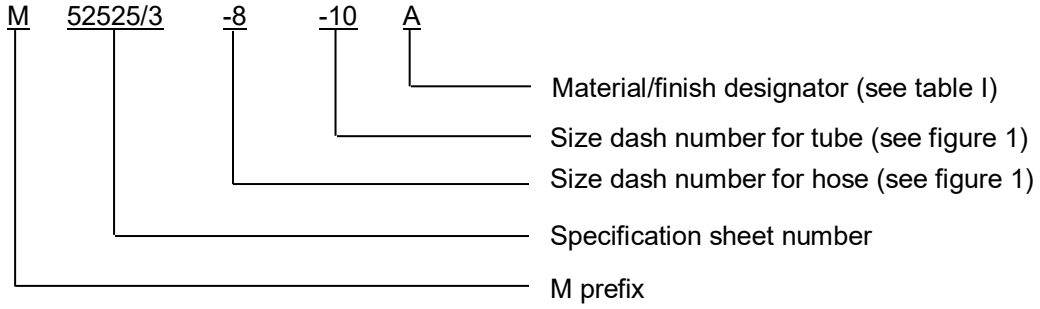

PIN example: M52525/3-8-10A, describes a 90° connector for a .500 inch hose ID, and a .625 inch tube OD, aluminum with an anodize finish.

To the users of this document, it is recommended that the use of carbon steel material with cadmium plating be used only when the other materials and finishes specified in this document cannot meet performance requirements.

Cadmium is prohibited from use in NAVSEA-owned shipboard systems in accordance with the requirements of T9070-AL-DPC-020/077-2, unless otherwise approved by NAVSEA.

Class I and II ozone depleting substances (ODS) shall not be used in MIL-DTL-52525/3 or any referenced procedures.

Referenced documents shall be of the issue in effect on date of invitations for bid.

Color identification. Color identification shall be in accordance with SAE-AS4841.

Marking shall include the manufacturer's name or trademark, size, and hose identifier R2. Location of marking is optional.

Harmonization to SAE-J516 cross reference PIN in table IV is for reference only. SAE style fittings may not have the same material/finish as required by MIL-DTL-52525 and legacy with MIL-DTL-52471.

TABLE IV. Harmonization to SAE-J516 cross reference PIN. 1/

PIN	SAE PIN
M52525/3-4-4	SAE J516 4-4 241454
M52525/3-4-5	SAE J516 4-5 241454
M52525/3-6-6	SAE J516 6-6 241454
M52525/3-6-8	SAE J516 6-8 241454
M52525/3-8-8	SAE J516 8-8 241454
M52525/3-8-10	SAE J516 8-10 241454
M52525/3-12-12	SAE J516 12-12 241454
M52525/3-16-16	SAE J516 16-16 241454

1/ Material and finish designators are omitted from PIN's, see table I and SAE-J846.

Changes from previous issue. Marginal notations are not used in this revision to identify changes with respect to the previous issue, due to the extent of the changes.

Referenced documents. In addition to MIL-DTL-52525, this document references the following:

MIL-A-8625
MIL-DTL-16232
MIL-DTL-52471
MIL-DTL-52471/2
MIL-DTL-52471/5
MIL-DTL-81706
ASME B1.1
ASTM B117
ASTM B633
ASTM B695
ASTM F1136/F1136M
ASTM MNL37
SAE-AMS-STD-595/36076
SAE-AMS-STD-595/36081
SAE-AMS-STD-595/36099
SAE-AMS-STD-595/36118
SAE-AMS-STD-595/36134
SAE-AMS-STD-595/36152
SAE-AMS-STD-595/36170
SAE-AMS-STD-595/36173
SAE-AMS-STD-595/36176
SAE-AMS-STD-595/36231
SAE-AMS-STD-595/36251
SAE-AMS-STD-595/36270
SAE-AMS-STD-595/36280
SAE-AMS-STD-595/36293
SAE-AMS-C-81562
SAE-AMS-QQ-P-416
SAE-AMS2417
SAE-AMS2488
SAE-AMS2486
SAE-AMS2700
SAE-AS1708
SAE-AS4841
SAE-J516
SAE-J517
SAE-J846
T9070-AL-DPC-020/077-2

CONCLUDING MATERIAL

Custodians:
Army - AT
Navy - SH
Air Force - 71
DLA - CC

Preparing activity:
DLA - CC

(Project 4730-2019-044)

Review activities:
Army - CR4
Navy - AS, CG, SA, YD

NOTE: The activities listed above were interested in this document as of the date of this document. Since organizations and responsibilities can change, you should verify the currency of the information above using the ASSIST Online database at https://assist.dla.mil.