INCH-POUND
MS24658H
29 September 2021
SUPERSEDING
MS24658G
18 April 2011

DETAIL SPECIFICATION SHEET

# SWITCH, TOGGLE, ONE POLE, ENVIRONMENTALLY SEALED, LEVER LOCK

This specification is approved for use by all Departments and Agencies of the Department of Defense.

The complete requirements for acquiring the switch described herein shall consist of this specification and the latest issue of MIL-DTL-3950.

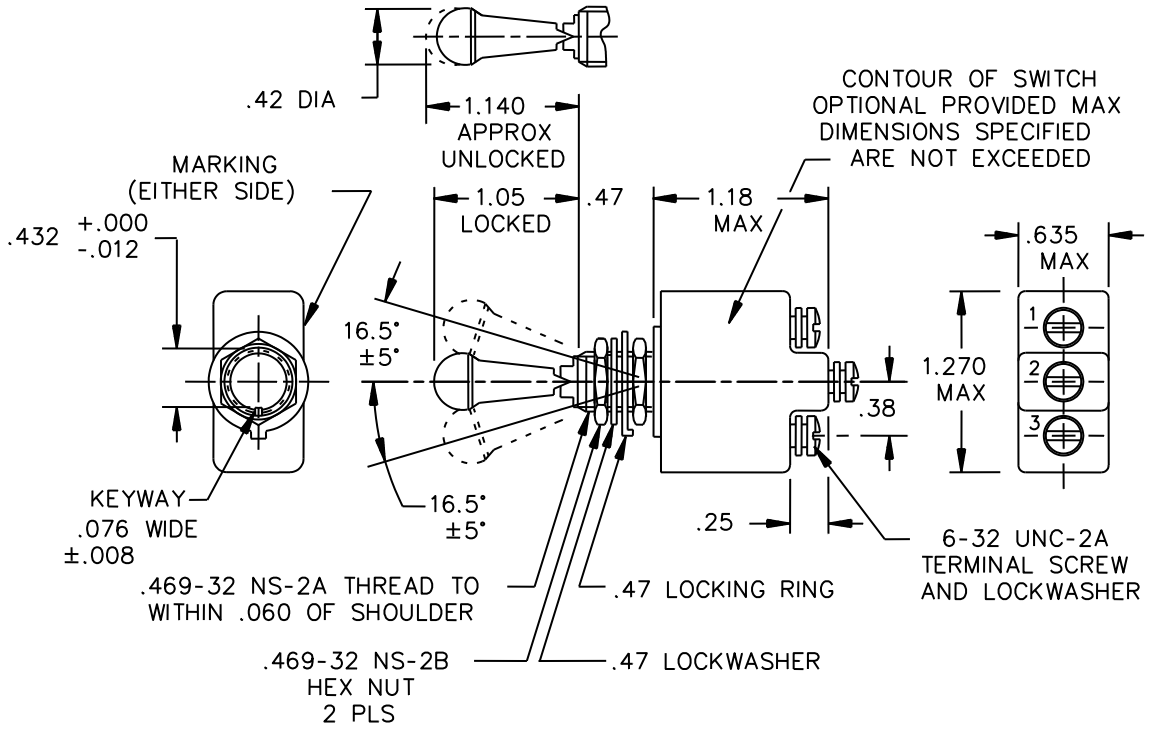


NOTES:
1. Dimensions are inches.
2. Unless otherwise specified, tolerance is ± .020 (0.51 mm) for two place decimals and ± .005 (0.13 mm) for three place decimals.
3. For hardware and terminal screw detail specifications, see appendix of MIL-DTL-3950.
4. In event of a conflict between the text of this standard and the reference cited herein, the text of this standard shall take precedence.

FIGURE1. Dimensions and configuration


DISTRIBUTION STATEMENT A. Approved for public release. Distribution is unlimited.

REQUIREMENTS

Locking arrangement Positive locking shall be accomplished and shall prevent motion of the toggle lever until the locking mechanism is manually released.

The force required to release the locking mechanism shall be 3 to 5 pounds.

The locking means at the top of the toggle bushing shall be capable of withstanding a torque of 20 inch-pounds applied in both directions immediately following the humidity test.

Part number example MS24658-21A (locking combination ‘A’).

All switches on this standard are designed so that the movement of the switch mechanism is opposite to that of the toggle lever

Maximum weight is .10 pound.

Electrical rating: See table I.

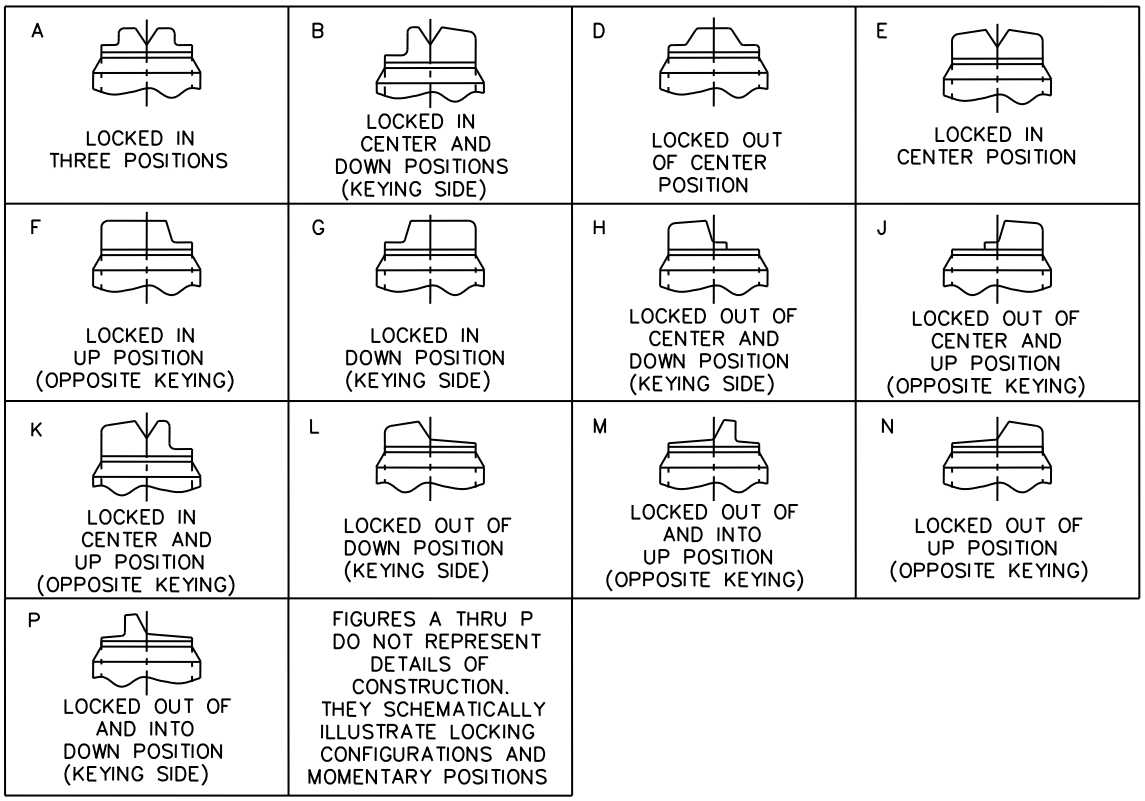


Figure 2. Locking Combinations.

TABLE I. Detail Requirements.

| MS part No. | Available locking combinations | Circuit with Toggle Lever In | | | Current capacity (amperes) 28 volts DC | | | Current capacity(amperes) 115 volts, 60 and 400 Hertz AC | | |
|---|---|---|---|---|---|---|---|---|---|---|
| | | Keying side | Center | Opposite keying side | Lamp-Load circuit | Resistive circuit | Inductive circuit | Lamp-Load circuit | Resistive circuit | Inductive circuit |
| MS24658-21 | All | 1-2 On | Off | 2-3 On | 5 | 20 | 15 | 3 | 15 | 10 |
| MS24658-22 | D,F,G | Off | None | 2-3 On | | | | | | |
| MS24658-23 | D,F,G | 1-2 On | None | 2-3 On | | | | | | |
| MS24658-24 | E,F,K,M | None | Off | 2-3 On | | | | | | |
| MS24658-25 | F | None | Mom. Off | 2-3 On | 4 | 15 | 10 | 2 | 15 | 7 |
| MS24658-26 | F | 1-2 Mom On | None | 2-3 On | | | | | | |
| MS24658-27 | E,L,N | 1-2 Mom On | Off | 2-3 Mom. on | | | | | | |
| MS24658-28 | E | 1-2 Mom On | Off | None | | | | | | |
| MS24658-29 | F | Mom. Off | None | 2-3 On | | | | | | |
| MS24658-30 | F | 1-2 Mom On | None | Off | | | | | | |
| MS24658-31 | E,F,K,L,M,N | 1-2 Mom On | Off | 2-3 On | | | | | | |
| MS24658-32 | E | None | On 1-2 | 2-3 Mom. On | | | | | | |
| MS24658-33 | E,F,K,M | None | On 1-2 | 2-3 On | 5 | 20 | 15 | 3 | 15 | 10 |

Referenced documents
MIL-DTL-3950

The margins of this specification are marked with vertical lines to indicate where modifications from this revision were made. This was done as a convenience only and the Government assumes no liability whatsoever for any inaccuracies in these notations. Bidders and contractors are cautioned to evaluate the requirements of this document based on the entire content irrespective of the marginal notations.

Custodians:
Army – CR
Navy – AS
Air Force – 85
DLA – CC

Preparing activity
DLA – CC

(Project 5930-2021-031)

Review activities
Army – AR, AT, AV, MI
Navy – EC, MC

NOTE: The activities listed above were interested in this document as of the date of this document. Since organizations and responsibilities can change, you should verify the currency of the information above using the ASSIST Online database at https://assist.dla.mil/ .